Annual Standards and Specifications

for Erosion and Sediment Control

and Stormwater Management

(revised 5/2/2019)

Capital Outlay & Facilities
PO Box 9414
VSU, VA 23806
Phone: (804)-504-7500
Fax: (804-524-5383

INTRODUCTION

The Virginia State University (VSU) Erosion and Sediment Control/Stormwater Management Program (ESC/SWM) is an integral component of the design, construction, maintenance, and management of the University Campus. The University's ESC/SWM Annual Standards and Specifications submittal has been developed to ensure that all land-disturbing activities undertaken by the University will proceed in accordance with the Virginia Erosion and Sediment Control Law and Virginia Stormwater Management Law and Regulations (ES/SWL&R), and The Virginia Erosion and Sediment Control Regulations and to Municipal Separate Storm Sewer Systems (MS-4) and construction activities.

The Annual Standards and Specifications for ESC/SWM shall apply to all plan design, construction and maintenance activities undertaken by the University, either by its internal workforce or contracted to external entities, where such activities are regulated by the Virginia Erosion and Sediment Control Law and Virginia Stormwater Management Law and Regulations. During any inspections of the University's land-disturbing activities by DEQ and other such environmental agencies, compliance with the approved Authority Annual Standards and Specifications for ESC/SWM (and all parts thereof) will be expected.

The University's Annual Standards and Specifications for ESC/SWM are submitted to the Department of Environmental Quality (DEQ) for review and approval on an annual basis. This submittal constitutes the University's commitment to execute all provisions contained herein on our regulated land-disturbing activities and land development projects. As such, this submittal will be made available and utilized as an operational guidance document by all appropriate University and DEQ personnel.

Capital Outlay & Facilities
PO Box 9414
VSU, VA 23806
Phone: (804)-504-7500
Fax: (804-524-5383

TABLE OF CONTENTS

1.0 ADMINISTRATION

2.0 PERSONNEL

3.0 IMPLEMENTATION

4.0 EROSION & SEDIMENTATION CONTROL/STORMWATER PLAN REQUIREMENTS

5.0 INSPECTIONS AND ENFORCEMENT

6.0 VARIANCES and EXCEPTIONS

7.0 LAND-DISTURBING ACTIVITES

8.0 ANNUAL STANDARDS AND SPECIFICATIONS REVIEW and EVAULATION

APPENDICES

Appendix A: ESC Plan Checklist

Appendix B: SWM Plan Checklist

Appendix C: Campus “Regional” BMP Credits Table

Appendix D: Storm Water Pollution Prevention Plan (SWPPP) Template

Appendix E: Standard Storm Water Pollution Prevention Specification

Appendix F: ESC & SWM Inspection Report

Appendix G: Variance Request Form

Appendix H: Exception Request Form

Appendix I: Pre-Approved Deviations

Appendix J: Land Disturbances

Capital Outlay & Facilities
PO Box 9414
VSU, VA 23806
Phone: (804)-504-7500
Fax: (804-524-5383

1.0 ANNUAL STANDARDS AND SPECIFICATIONS ADMINISTRATION

All projects involving land-disturbing activity that are subject to Stormwater and Erosion and Sediment Control shall be bound by the University Annual Standards and Specifications for Erosion and Sediment Control and Stormwater Management. Only registered design professionals will prepare and seal erosion and sedimentation control plans and stormwater management plans for University projects. The erosion and sediment control plans and stormwater management plans will follow the latest regulations (as amended) which are detailed below.

1.1. ESC/SWM References

Authority Annual Standards and Specifications for ESC/SWM approved by DEQ are composed of general specifications. The general specifications for ESC/SWM that apply to the land-disturbing activities include the ESC/SWM technical bulletins (as amended) and by reference include the following:

1.1.1. Virginia Erosion and Sediment Control Law (§62.1-44.15 et seq. as amended);
1.1.2. Virginia Erosion and Sediment Control Regulations (9VAC25-840 et seq. as amended);
1.1.3. Virginia Erosion and Sediment Control Certification Regulations (9VAC25-850 et seq. as amended);
1.1.4. Virginia Erosion and Sediment Control Handbook, 1992;
1.1.5. Virginia Stormwater Management Program (VSMP) Regulations (9VAC25-870) and the General Virginia Pollutant Discharge Elimination System (VPDES) Permit for Discharges of Stormwater from Construction Activities (9VAC25-880) (as amended).
1.1.6. Accessed at: http://www.deq.virginia.gov/Programs/Water/StormwaterManagement/Publications.aspx

1.2. ESC/SWM Plans Required

Site-specific ESC/SWM plans shall be to the Program Administrator for review. ESC/SWM Plans shall be reviewed by a DEQ-certified plan reviewer. If the review is conducted by third party, the plan reviewer may send recommendation of approval to the Program Administrator, who will then document approval. Written approval issued by the Program Administrator is required prior to starting a land-disturbing activity. Checklists that summarize the required components of the ESC/SWM Plans are included in Appendix A and Appendix B, respectively.

1.2.1. Changes to approved site-specific ESC/SWM plans shall be submitted to the Program Administrator for review in accordance with Section 1.2. Changes to approved ESC/SWM Plans shall be reviewed by a DEQ-certified plan reviewer. If

Capital Outlay & Facilities
PO Box 9414
VSU, VA 23806
Phone: (804)-504-7500
Fax: (804-524-5383

the review is conducted by third party, the plan reviewer may send recommendation of approval to the Program Administrator, who will then document approval. Written approval issued by the Program Administrator is required prior to starting a land-disturbing activity.

1.3. Variances and Exceptions

The University may request DEQ to grant a project specific variance to the approved University Annual Standards and Specifications for ESC/SWM. All requested variances are to be considered unapproved until written approval from DEQ is received. Refer to Section 6.0 for more information on variances.

1.4. Recordkeeping

1) The University shall maintain, either on-site or in the Program Administrator's files, a copy of approved plans and a record of inspections for each active land-disturbing activity.
2) Project records, including approved stormwater management plans, shall be kept for three years after state permit termination or project completion.
3) Stormwater management facility inspection records shall be documented and retained for at least five years from the date of inspection.
4) Construction record drawings shall be maintained in perpetuity or until a stormwater management facility is removed.
5) All registration statements submitted in accordance with 9VAC25-870-59 shall be documented and retained for at least three years from the date of project completion or state permit termination.

2.0 ANNUAL STANDARDS AND SPECIFICATIONS PERSONNEL

The University's Capital Outlay Department shall be the authority for administering University Projects under the University Annual Standards and Specifications for ESC/SWM. The following is a breakdown of related responsibilities and titles. The following functions are designated to ensure compliance with the Authority Annual Standards and Specifications for ESC/SWM on all University projects. All certifications shall be in accordance with Virginia Erosion and Sediment Control Law and Virginia Stormwater Management Law and Regulations.

2.4. ESC/SWM Annual Standards and Specifications Program Administrator

The Program Administrator shall have overall management and coordination responsibilities for the Authority outlined in the University's Annual Standards and Specifications for ESC/SWM. This person will reside within the Department of Capital Outlay. At a minimum, this person shall be a DEQ certified Program Administrator.

2.5. ESC/SWM Annual Standards and Specifications Plan Reviewer

The ESC/SWM Plan Reviewer shall be responsible for reviewing plans to ensure compliance with the University Annual Standards and Specifications for ESC/SWM and

Capital Outlay & Facilities
PO Box 9414
VSU, VA 23806
Phone: (804)-504-7500
Fax: (804-524-5383

applicable Virginia Erosion and Sediment Control Law and Virginia Stormwater Management Law and Regulations. The ESC Reviewer is either a licensed professional in accordance with 9VAC25-850-40 or holds the appropriate certificate of competency from the State Water Control Board (Board). The SWM Reviewer holds a certificate of competence from the Board in the area of plan review or is enrolled in the Board's training program for plan review and successfully completes such program within one year after enrollment. This person will reside within the Department of Capital Outlay or can be a certified third party hired by the Department of Capital Outlay. The Reviewer shall be responsible to review and approve erosion and sediment control and stormwater management plans and review Stormwater Pollution Prevention Plans (SWPPPs). If plan review is completed by a third party, the DEQ-certified plan reviewer shall make recommendations of approval or disapproval to the Program Administer, who will then be responsible for documentation. The Reviewer must state in writing the reason(s) for disapproval of an ESC/SWM Plan and specify the modifications, terms, and conditions necessary for plan approval.

2.6. ESC/SWM Annual Standards and Specifications Inspector

2.6.1. Responsibilities

The ESC/SWM Inspector shall have the responsibility for inspecting erosion and sediment control practices to evaluate compliance with the approved ESC/SWM plan and associated laws, regulations, and the Annual Standards and Specifications for ESC/SWM. The Inspector shall be responsible to inspect erosion and sediment control measures installed in accordance with approved plans to ensure proper installation and record the state and effectiveness of such measures in an effort to minimize site erosion and maximize sediment control. They shall also be responsible to inspect the construction and effectiveness of permanent stormwater management controls, verify that all required documents are available on-site for view/review, including but not limited to: approved plans, inspection logs, VSMP permit, SWPPP, *etc*.

2.6.2. Certification Requirements

This position shall be a DEQ certified inspector from the Department of Capital Outlay or can be a certified third party hired by the Department of Capital Outlay.

Regulations require that ESC inspectors obtain certification from DEQ by:

1) Either,
    i. obtaining 800 hours of experience as an ESC project inspector *or*
    ii. completing DEQ's "Basic Erosion and Sediment Control in Virginia" and "Erosion and Sediment Control for Inspectors" training programs
2) And
    i. obtaining a passing score on the applicable certification examination administered by DEQ.

Capital Outlay & Facilities
PO Box 9414
VSU, VA 23806
Phone: (804)-504-7500
Fax: (804-524-5383

Regulations require that SWM inspectors obtain certification from DEQ by:

1) Either,
   i. obtaining 800 hours of experience as an SWM project inspector *or*
   ii. completing DEQ's "Basic Stormwater Management in Virginia" and "Stormwater Management for Inspectors" training programs
2) And
   i. obtaining a passing score on the applicable certification examination administered by DEQ.

Certification and recertification is valid for three years.

2.7. Responsible Land Disturber

A Responsible Land Disturber (RLD) shall be designated prior to initiating the land-disturbing activity. The Contractor shall notify the University and DEQ Piedmont Regional Office of the Responsible Land Disturber at least two weeks in advance of the land-disturbing activity as follows:

1. Information shall be sent to StandardsandSpecs@deq.virginia.gov (This is subject to change as DEQ is in the process of obtaining a AS&S specific email account)
2. The following information needs to be included in the e-notification two weeks prior to initiating a regulated LDA:
   i. Project name or project number and any associated CGP permit number;
   ii. Project location (including nearest intersection, latitude and longitude, access point)
   iii. On-site project manager name and contact info
   iv. Responsible Land Disturber (RLD) name and contact info
   v. Project description
   vi. Acreage of disturbance for project
   vii. Project start and finish date
   viii. Any variances/waivers/exemptions associated with this project.

3.0 ANNUAL STANDARDS AND SPECIFICATIONS IMPLEMENTATION

ESC/SWM plans shall comply with the University Annual Standards and Specifications and the requirements listed in section 1.1. Starting July 1, 2014, VSMP Construction General Permits (GP) must include the general administrative criteria from Part II A. The technical criteria from Part II B or Part IIC should then be implemented as applicable to the project. Projects with land disturbances between 2,500 sf and 43,559 sf are not required to seek Construction GP coverage, but are required to have approved stormwater management plans and approved erosion and sediment control plans in accordance with the appropriate technical criteria.

Capital Outlay & Facilities
PO Box 9414
VSU, VA 23806
Phone: (804)-504-7500
Fax: (804-524-5383

3.1. Technical Criteria

The University has obtained initial 2009 Construction GP coverage for the MS4 boundary encompassing the main campus area in order to implement its architectural master plan in accordance with its stormwater master plan. As such, projects completed within the MS4 boundary limits of the main campus are considered to meet the time limits on applicability of approved design criteria per 9VAC25-870-47 and are eligible to use the technical criteria from Part IIB or Part IIC.

Projects designed to the technical criteria from Part IIB should use the Virginia Stormwater Management BMP Clearinghouse.

Projects designed to the technical criteria from Part IIC should use the *Virginia Stormwater Management Handbook*, First Edition, 1999 Volume I and II.

3.2. Use of Campus "Regional" BMPs

Campus wide water quality treatment BMPs are in place and being developed in accordance with the stormwater master plan. Development projects within the MS4 boundary can utilize these facilities to meet the Part IIC technical criteria. Projects seeking to utilize these campus-wide facilities must provide the following information within their stormwater management plans to demonstrate compliance:

3.2.1. Determination of the proposed project's water quality requirement using the performance-based water quality calculation worksheets.

3.2.2. Water quality accounting calculations and summary information showing the available treatment capacity in the subject BMP prior to the proposed project and remaining treatment capacity in the subject BMP after the proposed is implemented.

A list of projects utilizing the "regional" BMPs is included in Appendix C.

3.3. Storm Water Pollution Prevention Plan (SWPPP) Template

A preliminary SWPPP shall be prepared in accordance with the information provided below for submittal to the contractor.

3.3.1. Complete the preliminary SWPPP prior to the project bid-meeting.

3.3.2. Use the campus-wide SWPPP template included in Appendix D of these Annual Standards and Specifications.

3.3.3. Insert the approved ESC/SWM plans in the appropriate SWPPP appendices.

3.3.4. Include the Standard Stormwater Pollution Prevention Plan technical specification from Appendix E within the project bid package. The specification is to be implemented on all regulated land disturbing activities that require Construction GP Coverage.

Capital Outlay & Facilities
PO Box 9414
VSU, VA 23806
Phone: (804)-504-7500
Fax: (804-524-5383

3.3.5. Submit the completed preliminary SWPPP and technical specification to the contractors prior to the pre-bid meeting

3.4. Submittals

ESC/SWM drawings and narratives shall be submitted to the Program Administrator for review and approval prior to any land-disturbing activities. The Administrator will transmit the ESC/SWM plans to the appropriate DEQ-certified plan reviewer. The Reviewer shall have 30 days to review the plan and provide written comments to the University's Administrator. Prior to commencement of a land-disturbing project, the project must have received written approval for the plan(s) from the Program Administrator.

3.5. Plan reviews

Plan reviews shall be conducted by a DEQ-certified Plan Reviewer. Plan reviews shall ensure compliance with the University's Annual Standards and Specifications. Plan Reviewers shall use the Plan Checklists provided in Appendix A for ESC and Appendix B for SWM plans.

3.6. Inspections

The Inspector(s) is responsible for determining if the implementation of the project is in accordance with the site-specific approved erosion and sediment control plans, stormwater management plans, and associated Virginia Erosion and Sediment Control Law and Virginia Stormwater Management Law and Regulations. Refer to Section 5.0 for more information on inspections and enforcement procedures.

3.7. Changes and Amendments to Approved Plans

An approved plan may be changed by the Department of Capital Outlay in the following cases:

3.7.1. Where inspection has revealed the plan is inadequate to satisfy applicable regulations; or,

3.7.2. If, for changed circumstances or other reasons, the approved plan cannot be effectively carried out, and proposed amendments to the plan, consistent with the requirements of this article, are agreed to by the plan-approving authority and the person responsible for carrying out the plan.

Subject to the discretion of the Inspector and/or project manager, revisions to an approved ESC/SWM plan must be submitted in writing to the Administrator for review. Formal plan revisions are only necessary when the changes involve engineered controls (e.g., a sediment trap or basin) or a reduction in the level or quantity of ESC/SWM. Revisions must comply with the University's Annual Standards and Specifications for ESC/SWM. Revisions shall not be considered approved until written notice is provided. Further, any modifications to the approved ESC/SWM plan that affect information on the

Capital Outlay & Facilities
PO Box 9414
VSU, VA 23806
Phone: (804)-504-7500
Fax: (804-524-5383

Construction General Permit (GCP) registration statement shall be made known to the DEQ CPG permitting staff.

3.8. Submittal and approval process

The following flow chart outlines the University's submittal and approval process from conception to end of land disturbing activity for activities that are not covered under the Campus-wide VSMP General Construction Permit (VAR109268).

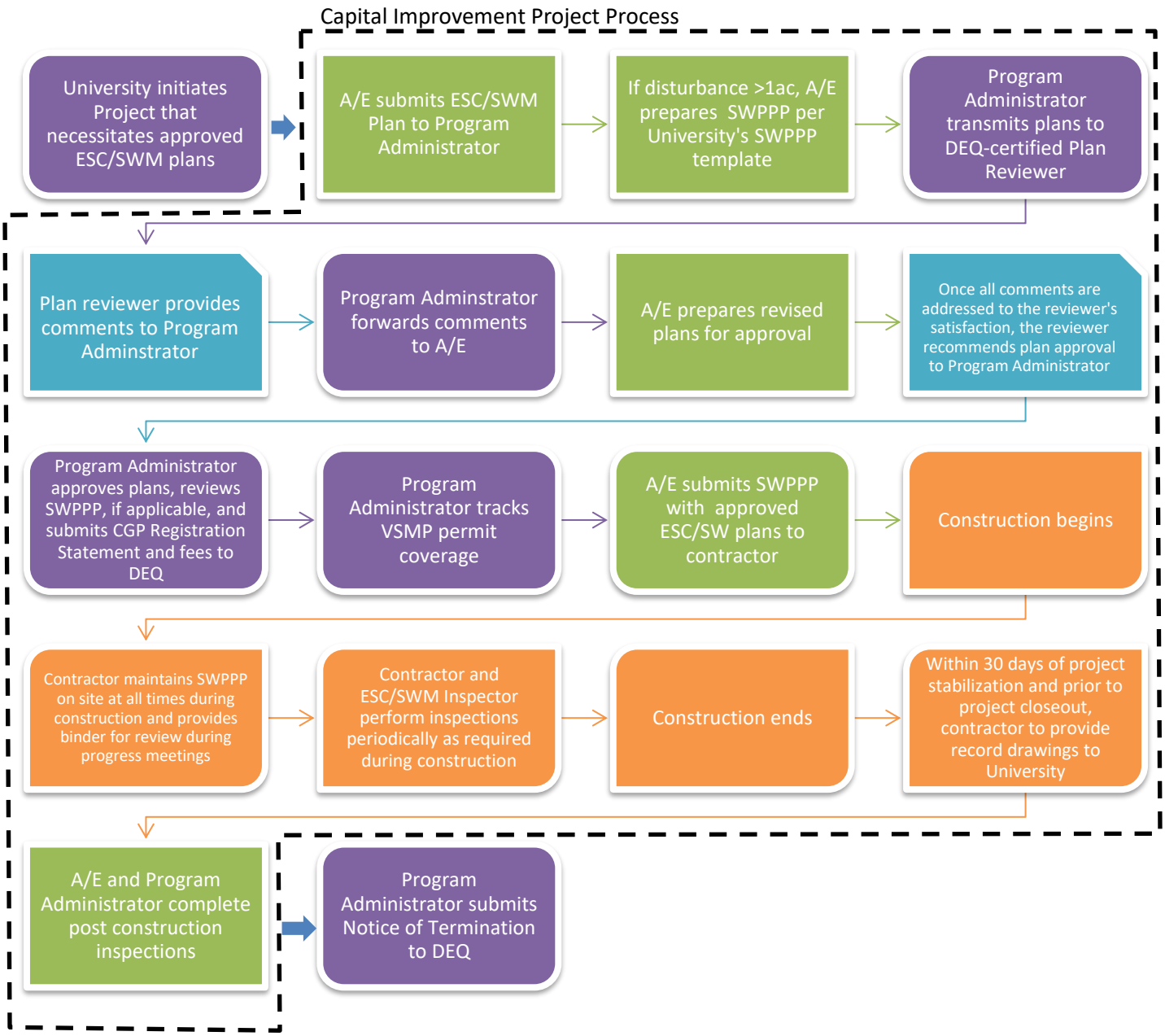

Capital Outlay & Facilities
PO Box 9414
VSU, VA 23806
Phone: (804)-504-7500
Fax: (804-524-5383

Capital Improvement Project Process (for land disturbances covered under VAR109268)

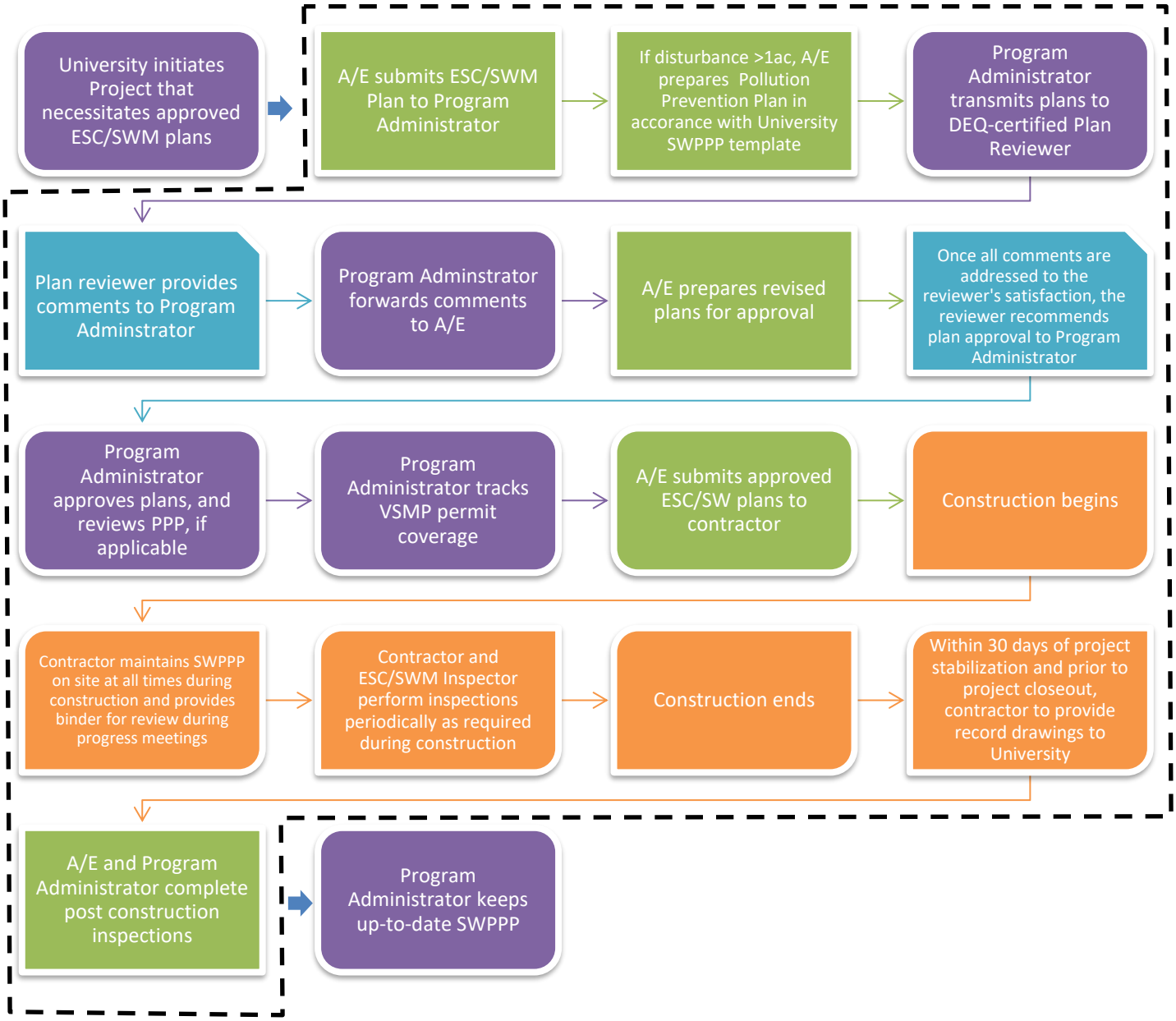

Capital Outlay & Facilities
PO Box 9414
VSU, VA 23806
Phone: (804)-504-7500
Fax: (804-524-5383

4.0 EROSION & SEDIMENTATION CONTROL/STORMWATER MANAGEMENT PLAN REQUIREMENTS

ESC and SWM Plans must be approved by VSU's DEQ-Certified ESC/SWM Plan Reviewer prior to land disturbance.

4.1. Submittals

ESC/SWM plans and supporting documentation as outlined below shall be submitted to the Department of Capital Outlay for review and approval. The submittal must include the appropriate information and data necessary to support the licensed design professional's work.

4.1.1. Checklists
A complete set of project construction plans and checklists (Appendix A and B), in addition to supporting information such as calculations, design standard and specifications, reports, certifications, variances, exceptions, record documents, digital files, *etc*., shall be submitted to the Department of Capital Outlay for review and approval prior to any land-disturbing activities. The submittal shall include a design that is in accordance with VSU's approved Annual Standards and Specifications for ESC/SWM.

4.1.2. Resubmittals
For all second and subsequent submittals, the submitting professional shall include a cover letter with explanations as to how each review comment is addressed and references the relevant drawing sheet or narrative location. In addition, significant changes in the ESC/SWM Plan shall be listed as part of the cover letter. The cover letter may warrant additional comments/discussion depending upon the previous review comments or changes to the plans.

4.2. ESC Plan Requirements

Complete erosion and sediment control plans shall be provided in the construction plans and include the following:

4.2.1. Minimum standards 1 through 19 shall be listed in the construction plans.

4.2.2. Construction sequence of operations shall be defined on the construction plans with staged implementation of erosion and sediment control measures for each phase. The area which may be disturbed in each phase shall be set forth in the construction plans.

4.2.3. Construction plans shall provide information on the maintenance of all erosion and sediment control measures or reference the narrative section that contains the maintenance information.

Capital Outlay & Facilities
PO Box 9414
VSU, VA 23806
Phone: (804)-504-7500
Fax: (804-524-5383

4.2.4. Construction plans shall include the amount of disturbed area listed per phase as well as the existing and proposed impervious areas, including a net change in impervious area calculation.

4.2.5. Land disturbing activity occurring at a separate location (contractor laydown areas, borrow areas, support-activities, etc.) shall be addressed by either:

a. Considering the off-site activity as being part of the proposed land-disturbing activity; or

b. Ensuring that the offsite area is already covered by an approved erosion and sediment control plan. The University may require the applicant to provide proof of the approval and certification that the plan will be implemented in accordance with the SWM Act.

4.2.6. Proof of adequate outfall and adequacy of the receiving channel to the SW treatment facility needs to be submitted and approved.

4.2.7. Stockpile/lay-down areas and trailer locations shall be provided on the erosion and sediment control plans.

4.2.8. Plans shall comply, to the maximum extent practicable, with any locality's VSMP authority's technical requirements or demonstrate that the locality's VSMP ESC technical requirements are not practicable for the project.

4.3. SWM Plan Requirements

The SWM plan outlines how stormwater leaving a site after construction will meet the necessary water quality and quantity technical criteria. The SWM plan must include the following:

4.3.1. The appropriate technical criteria applied to the entire land disturbing activity (LDA).

4.3.2. Consideration of all sources of surface runoff including subsurface flows converted to surface runoff.

4.3.3. Information on the type of and location of stormwater discharges, information on the features to which stormwater is being discharged including: Surface waters or karst features, if present, and pre-development and post-development drainage areas.

4.3.4. Contact information including: Name, address, telephone number, and email address of the owner Tax reference number and parcel number of the property or properties affected

4.3.5. Narrative including description of current site conditions and final site conditions or if allowed by the VSMP authority, the information provided and documented during the review process that addresses the current and final site conditions.

4.3.6. General description of the proposed stormwater management facilities and the mechanism through which the facilities will be operated and maintained after construction is complete.

4.3.7. Information on the proposed stormwater management facilities, including type of facilities, location, including geographic coordinates, acres treated, surface

Capital Outlay & Facilities
PO Box 9414
VSU, VA 23806
Phone: (804)-504-7500
Fax: (804-524-5383

waters or karst features into which the facility will discharge. Stormwater facilities shall have unique identifications and referenced in all documentation, (e.g., SWPPP, narrative, construction plans, and calculations sealed by a Virginia Professional Engineer, etc.).

4.3.8. Hydrologic and hydraulic computations, including runoff characteristics. SW calculations include but are not limited to: ditch computations, stormwater routing, storm inlet computations, pipe capacity computations, BMP computations, pond routings and computations, etc.

4.3.9. Profiles shall be included for all closed and open storm systems. The profile shall include the existing surface, final surface, proposed water surface elevations, pipes, pipe crossings, and hydraulic grade line. Surcharges shall be clearly indicated on the profile.

4.3.10. Documentation and calculations verifying compliance with the water quality and quantity requirements of the Stormwater Regulations.

4.3.11. Map(s) of the site that depict the topography of the site and includes all contributing drainage areas, existing streams, ponds, culverts, ditches, wetlands, other water bodies, and floodplains, soil types, karst features if present, forest cover, and other vegetative areas. Current land use including existing structures, roads, and location of known utilities and easements and sufficient information on adjoining parcels to assess the impacts of stormwater from site on these parcels. Limits of clearing and grading, and the proposed drainage patterns on the site, proposed buildings, roads, parking areas, utilities, and stormwater management facilities. Proposed land use with tabulation of the percentage of surface area to be adapted to various uses, including but not limited to planned locations of utilities, roads, and easements.

4.3.12. Plans should also include a detailed landscape plan with a planting schedule.

4.3.13. Project plans shall contain information on maintenance of BMPs.

<u>State Maintenance Agreement</u>: The following information shall be printed on the approved stormwater management plan for state projects:

a. A description of the requirements for maintenance and maintenance inspection of the stormwater management facilities and a recommended schedule of maintenance inspection and maintenance.
b. The identification of a person or persons who will be responsible for maintenance inspection and maintenance.
c. The maintenance inspection schedule and maintenance requirements should be in accordance with the Virginia BMP Clearinghouse, the Virginia SWM Handbook, the MS4 permit (if applicable) and/or the manufacturer's specifications.
d. Please clearly depict the types of land cover on the site (i.e. different type of hatching for each land cover), including the acreage for each cover type. The acreage should be labeled in all of the subareas and please also provide a table that adds the land cover up by type on the sheet.

Capital Outlay & Facilities
PO Box 9414
VSU, VA 23806
Phone: (804)-504-7500
Fax: (804-524-5383

e. Please draw metes and bounds all the way around any conserved open space.
f. Please label any conserved open space as “Runoff Reduction Compliance Forest / Open Space”
g. Please include the following note on the sheet: “The Runoff Reduction Compliance Forest/Open Space area shown here shall be maintained in a forest/open space manner until such time that an amended storm water management plan is approved by the VSMP Authority.”

4.3.14. Long-Term Maintenance Responsibilities

a. Responsibility for the operation and maintenance of stormwater management facilities shall remain with the University and shall pass to any successor or owner. If portions of the land are to be sold, legally binding arrangements shall be made to pass the basic responsibility to successors in title. These arrangements shall designate for each state project the property owner, governmental agency, or other legally established entity to be permanently responsible for maintenance.
b. At a minimum, a stormwater management facility shall be inspected by the University on an annual basis and after any storm which causes the capacity of the facility principal spillway to be exceeded.

4.3.15. Record drawings for the plan must be appropriately sealed and signed by a professional registered in Virginia.

4.3.16. At the completion of the project, a construction record drawing (“as-built”) for permanent stormwater management facilities must be provided bearing the seal and signature of a Virginia registered professional, certifying that the stormwater management facilities have been constructed in accordance with the approved plan.

4.3.17. Plans shall comply, to the maximum extent practicable, with any locality’s VSMP authority’s technical requirements or demonstrate that the locality’s VSMP SWM technical requirements are not practicable for the project.

4.4. Suggested Plan Sheets (actual sheets may vary accordingly)

a) Cover Sheet (General Notes, Vicinity Map)
b) General Construction Details
c) Existing Conditions and Grading (2’ contours)
d) Existing Drainage Divides (include calculated areas, impervious areas, C-values, and soils)
e) Proposed Site Plan
f) Proposed Grading Plan (1’-2’ contours; spot elevations @ high/low points and entrances)
g) Proposed Drainage Divides (include calculated areas, impervious areas, C-values, and soils)
h) E&S Narrative (Narrative Template)

Capital Outlay & Facilities
PO Box 9414
VSU, VA 23806
Phone: (804)-504-7500
Fax: (804-524-5383

i) Phases of ESC w/ Drainage Divides identified per construction phase
j) ESC/BMP/SWM Details
k) Stormwater Pipe Profiles (include dimensioned utility crossings)
l) Stormwater Calculations (ditch comps, pipe comps, inlet comps, pond routings, etc.)
m) Detailed Landscaping Plan (include planting schedule)

5.0 INSPECTIONS AND ENFORCEMENT

5.1. Periodic Inspections

The Contractor and ESC/SWM Inspector shall perform periodic inspections to ensure all ESC/SWM measures are installed and functioning correctly, and all SWM measures and facilities are being installed correctly, during construction.

5.1.1. Periodic inspections are required on all projects with approved ESC/SWM plans:

1. Provide for an inspection during or immediately following initial installation of erosion and sediment controls, at least once in every two-week period, within 48 hours following any runoff producing storm event, and at the completion of the project prior to the release of any performance bonds; or
2. Establish an alternative inspection program which ensures compliance with the approved erosion and sediment control plan. Any alternative inspection program shall be:
    a. Approved by the board prior to implementation;
    b. Established in writing;
    c. Based on a system of priorities that, at a minimum, address the amount of disturbed project area, site conditions and stage of construction; and
    d. Documented by inspection records.
3. Provide periodic inspections of the installation of stormwater management measures.

5.2 Inspection Reports

The inspection report provided in Appendix F shall be used during each site inspection. All measures shown on the plan shall be inspected. All problems and violations shall be documented on the inspection report. Inspection reports shall specify a corrective action for each problem or violation noted and a date the corrective action must be completed. A copy of the inspection report will be provided to the project staff.

5.2.1 ESC Inspections

ESC inspections shall use the Inspection report provided in Appendix F on each site inspection visit. All measures shown on the plan shall be inspected. All issues and violations shall be photographed and documented in the report. Critical Areas that require continuous inspections shall also be identified on the site plan. Inspection reports shall specify the required corrective action for each

Capital Outlay & Facilities
PO Box 9414
VSU, VA 23806
Phone: (804)-504-7500
Fax: (804-524-5383

issue or violation noted and a date by which all corrective actions must be completed. A copy of the Inspection Report will be emailed to the project Contractor.

5.2.2 SW Inspections

SW Inspections shall use the Inspection Report provided in Appendix F to record SW inspections on each site inspection. All stormwater BMPs must be identified on the site plan. As previously addressed, identification of permanent BMPs shall be coordinated with the University's stormwater permits. Critical areas that require continuous inspections shall also be identified on the site plan. Photographs will be taken during the inspection and referenced within the report.

5.2.3 Final Inspections

Project Closeout is defined as the achievement of final stabilization, verification of final product according to approved plans. The Department of Capital Outlay will determine that final stabilization has been achieved. All SWPPP documentation must be complete and provided to the Department of Capital Outlay in print and electronic format prior to permit close out. The final project as-built will be received and the land disturbance/stormwater permit will be closed-out. If deemed appropriate, retainage may be withheld as a performance guarantee for up to 60 days after achievement of final stabilization unless otherwise directed by the Contract.

5.2.4 Post-Construction Inspections

Post-construction inspections shall be made in accordance with the manufacturer's and/or engineer's recommendation, the provisions of these standards and specifications, and in accordance with the University's MS4 Program. University inspectors shall inspect and note items from the stormwater management devices that were identified for cleaning or repair. The inspection requirements shall be provided to the University's Capital Outlay and Facilities Management Departments for the issuance of a work order to complete the activity.

5.3 Violations

5.3.1 When violations noted on written inspection reports remain during subsequent inspections, a Notice to Comply will be issued by the Department of Capital Outlay. The Notice to Comply will contain specific measures or corrections that need to be made and specify deadlines for completion. Stop Work Orders will be issued when the project has failed to meet the prescribed deadlines in a Notice to Comply; or LDA commenced without an approved plan; or when violations are causing or are in imminent danger or causing harmful erosion.

Capital Outlay & Facilities
PO Box 9414
VSU, VA 23806
Phone: (804)-504-7500
Fax: (804-524-5383

5.3.2 Violations shall be documented in the Inspection Report, including photographs, descriptions, and necessary corrective actions. If a violation continues to be repeated, then a formal Notice of Non-Compliance will be issued, and DEQ will be notified. At the discretion of the Capital Outlay Department, the Land Disturbance/Stormwater Permit may be suspended and/or revoked; at which time all land disturbing activity must cease until the violation(s) of the plan or permit has ceased, corrective action completed, and any related environmental or property damages abated. The University reserves the right to contract with a 3rd party to install and maintain the Erosion and Sediment Control and/or Stormwater Management measures in accordance with the approved plan, complete any necessary corrective actions, and abate any related damages. The Contractor (the officer of the company and senior project officers) shall schedule and meet with the Capital Outlay Department to discuss the violations. After the meeting has been conducted and the site is stabilized to the satisfaction of the Capital Outlay Department, site work may resume. All associated costs will be back-charged to the Contractor. The Stop Work Order will be lifted once the required ESC/SWM measures or corrections are in place and verified by the ESC/SWM Inspector.

5.3.3 ESC/SWM Inspectors will also be responsible for responding in a timely manner to reports of alleged violations reported by University staff, or adjacent property owners, or others. Corrective measures if warranted will follow standard procedures as outlined for ESC/SWM inspections.

6.0 VARIANCES AND EXCEPTIONS

Variances and Exceptions to regulations must ensure protection of off-site properties and resources from damage. Economic hardship is not sufficient reason to request a variance or an exception. For a variance and/or exception to become part of a project specific ESC/SWM Plan, a written variance request must be submitted by the Department of Capital Outlay & Facilities for review and approval by DEQ. This request must include an explanation of the reasons for requesting the variance and a description of the specific site conditions necessitating the request. The request must also include a detailed description of the alternative ESC practice and justification that the practice meets the intent of the Minimum Standard for which the variance is sought.

6.1. ESC/SWM Variance Request Procedures

6.1.1. The Department of Capital Outlay & Facilities shall coordinate the review and approval of all requested variances with DEQ's ESC/SWM Program representative(s).

6.1.2. All requests for project specific variances to VSU's approved Annual Standards and Specifications for ESC/SWM shall be sent by the licensed design professional to the Department of Capital Outlay & Facilities and shall be

Capital Outlay & Facilities
PO Box 9414
VSU, VA 23806
Phone: (804)-504-7500
Fax: (804-524-5383

accompanied by complete details and documentation, including justification for the requested variance and impacts associated with the variance request. The licensed design professional shall complete the form included in Appendix G.

6.1.3. The VSU Program Administrator (or representative) will review the request and determine if the request should be sent to DEQ for further consideration. If the Administrator determines the request should not be sent to DEQ, then the request shall be considered denied.

6.1.4. Variance requests will be sent by the Department of Capital Outlay & Facilities to the DEQ Richmond Central Office and to the Virginia Erosion and Sediment Control Program Manager for review and approval, if determined to be appropriate.

6.1.5. All requested variances shall be considered unapproved until written approval from DEQ is received.

6.1.6. All approved variances shall be listed in the General Notes section of the ESC/SWM construction drawings for land disturbing activities and included in the narrative.

6.2. ESC/SWM Exception Request Policy and Procedures:

6.2.1. The Department of Capital Outlay & Facilities shall coordinate the review and approval of all requested exceptions with DEQ's ESC/SWM Program representative(s).

6.2.2. All requests for project specific exceptions to VSU's approved Annual Standards and Specifications for ESC/SWM shall be sent by the licensed design professional to the Department of Capital Outlay & Facilities and shall be accompanied by complete details and documentation, including justification for the requested exception and impacts associated with the exception request. The licensed design professional shall complete the form included in Appendix H.

6.2.3. The VSU Program Administrator (or representative) will review the request and determine if the request should be sent to DEQ for further consideration. If the Administrator determines the request should not be sent to DEQ, then the request shall be considered denied.

6.2.4. Exception requests will be sent by the Department of Capital Outlay & Facilities to the DEQ Richmond Regional Office and to the Virginia Erosion and Sediment Control Program Manager for review and approval, if determined to be appropriate.

6.2.5. All requested exceptions shall be considered unapproved until written approval from DEQ is received.

6.2.6. All approved exceptions shall be listed in the General Notes section of the ESC construction drawings for land disturbing activities and included in the narrative.

6.3. Pre-approved Variances

The Department of Capital Outlay & Facilities has included as part of the Annual Standards and Specifications for ESC, certain pre-approved deviations for ESC

Capital Outlay & Facilities
PO Box 9414
VSU, VA 23806
Phone: (804)-504-7500
Fax: (804-524-5383

measures/controls that are not included in the VESCH. Appendix I includes a list of pre-approved deviations for certain ESC measures that may be included as part of the project construction plans, provided the plans contain a detail sheet, inspection instructions, installation instructions, and maintenance instructions. ESC measures/controls not specifically included as part of the approved ESC Plan shall not be used on the project unless the ESC Plan is amended to include the specific ESC measure/control.

Non-VESCH control measures, best management practices (BMP), and specifications have been included in the Annual Standards and Specifications but their use may be further reviewed and approved by the applicable DEQ Regional Office on a project-specific basis.

Should non-VESCH control measures fail to effectively control soil erosion, sediment deposition, and non-agricultural runoff, then VESCH control measures shall be utilized.

7.0 LAND-DISTURBING ACTIVITIES

7.1. List of Regulated Land-Disturbing Activities

7.1.1. A list of regulated land-disturbing activities expected to be under contract during the referenced time period are included in Appendix J. The list includes project location, estimated disturbed acreage by watershed, and approximate start and completion dates for each project. Information on specific land-disturbing activities not included on the list will be provided to DEQ no less than two weeks prior to the start of the activity as described in Section 2.4.

7.2. Tracking of Regulated Land-Disturbing Activities

7.2.1. The University will track regulated land-disturbing activities through the Capital Outlay Department Permitting process. The Capital Outlay Department shall provide an annual list of proposed projects as related to Erosion and Sediment Control and Stormwater Management. Any changes to the annual list will be updated and forwarded to DEQ.

7.2.2. The University will submit annual project tracking to DEQ's Central Office for all regulated land disturbing activities. Information in these records should be the same items within the e-notifications as described in Section 2.7.

8.0 DEQ OVERSIGHT OF ANNUAL STANDARDS AND SPECIFICATIONS

DEQ will provide oversight of the University's implementation of these Annual Standards and Specifications as well as the University's SW/ESC program management in accordance with the following:

Capital Outlay & Facilities
PO Box 9414
VSU, VA 23806
Phone: (804)-504-7500
Fax: (804-524-5383

8.1. DEQ Comment

8.1.1. DEQ shall have sixty days in which to comment on any erosion and sediment control specifications submitted to it for review, and its comments shall be binding on the University and any private business hired by the University.

8.2. DEQ Information Request

8.2.1. The University shall ensure compliance with the approved plan and annual standards and specifications. Upon request by the DEQ, the University shall provide a copy of the approved plan sheets and narrative for each regulated land-disturbing activity as outlined in Section 1.1. The University shall provide DEQ with the appropriate information, in a timely manner, when requested.

8.3. Additional DEQ Over-Sight Information:

8.3.1. Standards and specifications shall be submitted to DEQ by the University on an annual basis.

8.3.2. Enforcement

8.3.2.1. Enforcement shall be administered by the Department and the Board where applicable in accordance with the provisions of this article.

8.3.2.2. The Department and the Board, where applicable, shall provide project oversight and enforcement as necessary and comprehensive program compliance review and evaluation. The Department may take enforcement actions in accordance with this article and related regulations.

8.3.3. Complaints and Inspections

8.3.3.1. The Department shall perform random site inspections or inspections in response to a complaint to assure compliance with this article, the Erosion and Sediment Control Law, and regulations adopted thereunder.

8.3.4. Fees

8.3.4.1. The Department shall assess an administrative charge to cover the costs of services rendered associated with its responsibilities pursuant to this section.

8.3.4.2. The Board shall have the authority to enforce approved specifications and charge fees equal to the lower of (i) $1,000 or (ii) an amount sufficient to cover the costs associated with standard and specification review and approval, project inspections, and compliance.

8.3.5. DEQ Discretionary requirements. *All linear project entities are required to include the following two discretionary requirements in their annual standards and specifications.* Two Discretionary Requirements:

1) Inspection reports conducted by VSU as well as complaint logs and complaint responses may be required to be submitted to DEQ.
2) VSU may be required to provide weekly e-reporting to the department's applicable regional office:
   i. Inspection reports;
   ii. Pictures;
   iii. Complaint logs and complaint responses; and
   iv. Other compliance documents.

APPENDIX A

ESC PLAN PREPARATION & REVIEW CHECKLIST

Capital Outlay & Facilities
PO Box 9414
VSU, VA 23806
Phone: (804)-504-7500
Fax: (804-524-5383

ESC PLAN PREPARATION & REVIEW CHECKLIST

The following checklist shall be completed prior to submitting the project specific Erosion and Sediment Control Plan. This completed checklist shall be included with the SWPPP immediately after the SWPPP Title Page.

_____ Minimum Standards – All applicable Minimum Standards must be addressed

_____ Construction Sequence – A sequence of operations shall be defined on the construction plans with staged implementation of erosion and sediment control measures for each phase.

NARRATIVE

_____ Project description - Briefly describes the nature and purpose of the land disturbing activity, and the area (acres) to be disturbed.

_____ Existing site conditions - A description of the existing topography, vegetation and drainage.

_____ Adjacent areas - A description of neighboring areas such as streams, lakes, residential areas, roads, *etc*., which might be affected by the land disturbance.

_____ Off-site areas - Describe any off-site land-disturbing activities that will occur (including borrow sites, waste or surplus areas, *etc*.). Will any other areas be disturbed?

_____ Soils - A brief description of the soils on the site giving such information as soil name, mapping unit, erodibility, permeability, depth, texture and soil structure.

_____ Critical areas - A description of areas on the site which have potentially serious erosion problems (*e.g*., steep slopes, channels, wet areas. streams, underground springs, *etc*.).

_____ Erosion and sediment control measures - A description of the methods which will be used to control erosion and sedimentation on the site (Controls should meet the specifications in Chapter 3 of the VESCH, latest edition).

_____ Permanent stabilization - A brief description, including specifications, of how the site will be stabilized after construction is completed.

_____ Stormwater runoff considerations - Will the developed site cause an increase in peak runoff rates? Will the increase in runoff cause flooding or channel degradation downstream? Describe the strategy to control stormwater runoff.

_____ Maintenance - A schedule of regular inspections and repair of erosion and sediment control structures should be set forth.

_____ Calculations - Detailed calculations for the design of temporary sediment basins, permanent stormwater detention basins, diversions, channels, *etc*. Include calculations for pre- and post-development runoff.

Capital Outlay & Facilities
PO Box 9414
VSU, VA 23806
Phone: (804)-504-7500
Fax: (804-524-5383

CONSTRUCTION PLAN

_____ Vicinity map - A small map locating the site in relation to the surrounding area. Include any landmarks which might assist in locating the site.

_____ Indicate north - The direction of north in relation to the site.

_____ Limits of clearing and grading – Areas which are to be cleared and graded.

_____ Existing contours - The existing contours of the site.

_____ Final contours - Changes to the existing contours, including final drainage patterns.

_____ Existing vegetation - The existing tree lines, grassed areas, or unique vegetation.

_____ Soils - The boundaries of different soil types.

_____ Existing drainage patterns - The dividing lines and the direction of flow for the different drainage areas. Include the size (acreage) of each drainage area.

_____ Critical erosion areas - Areas with potentially serious erosion problems (Refer to VESCH, Chapter 6 for criteria).

_____ Site Development - Show all improvements such as buildings, parking lots, access roads, utility construction, *etc*.

_____ Location of practices - The locations of erosion and sediment controls and stormwater management practices used on the site (*e.g.* stockpile/laydown locations, temporary/permanent seeding, inlet protection, *etc*.). Use the standard symbols and abbreviations in Chapter 3 of the VESCH.

_____ Off-site areas - Identify any off-site land-disturbing activities (*e.g*., borrow sites, waste areas, *etc*.). Show location of erosion controls. (Is there sufficient information to assure adequate protection and stabilization?)

_____ Detail Drawings – Any structural practices used that are not referenced to the VESCH or local handbooks should be explained and illustrated with detail drawings.

MINIMUM STANDARDS

_____ MS-1 – Temporary and permanent stabilization of denuded areas within 7 days

_____ MS-2 – Protection or stabilization of on-site and off-site soil stockpiles and borrow areas

_____ MS-3 – Permanent vegetative stabilization of denuded areas not otherwise stabilized

_____ MS-4 – Install erosion and sediment controls as the first step in land-disturbing activity

Capital Outlay & Facilities
PO Box 9414
VSU, VA 23806
Phone: (804)-504-7500
Fax: (804-524-5383

_____ MS-5 – Earthen controls and structures stabilized immediately upon installation

_____ MS-6 – Trap and Basin design
Trap: < 3 acres total drainage area, 134 cubic yards per acre storage
Basin: 3 acres or more total drainage area, 134 cubic yards per acre storage, safely handle a 25-year, 24-hour storm event

_____ MS-7 – Design and construction of cut and fill slopes

_____ MS-8 – Concentrated flow down cut and fill slopes

_____ MS-9 – Slopes protected from seeps

_____ MS-10 – Operational stormwater inlets must be protected

_____ MS-11 – Outlets must be protected and stormwater conveyance channels stabilized before being made operational

_____ MS-12 – Minimize impacts when working in and around live watercourses

_____ MS-13 – Temporary vehicular stream crossings for more than 2 trips in 6 months

_____ MS-14 – Other federal, state, and local regulations pertaining to work in live watercourses (Required permits COE, DEQ, VPDES, etc.)

_____ MS-15 – Stabilize disturbed bed and banks of watercourses

_____ MS-16 – Utility installations (< 500 feet open trench, stockpile upgradient, filter dewatering effluent, backfill and compact, other safety requirements)

_____ MS-17 – Keep paved or public areas clean

_____ MS-18 – Remove temporary controls within 30 days when no longer needed

_____ MS-19 – Address increases in stormwater volume, velocity, and peak runoff

PROJECT NAME: _____ **SUBMITTAL#:** _____

PLANS DATED: _____ **NARRATIVE DATED:** _____

_____	_____	_____
Print	Professional's Signature	Date

APPENDIX B

SWM PLAN PREPARATION & REVIEW CHECKLIST

Capital Outlay & Facilities
PO Box 9414
VSU, VA 23806
Phone: (804)-504-7500
Fax: (804-524-5383

SWM PLAN PREPARATION & REVIEW CHECKLIST

The following checklist shall be completed prior to submitting the project specific Stormwater Management Plan. This completed checklist shall be included with the SWPPP immediately after the SWPPP Title Page.

SW General (9VAC25-870-55 and 9VAC25-870-160):	**YES**	**NO**
Title Page including Project, Contract Number, and Date.	☐	☐
Virginia Professional Engineer Seal	☐	☐
Stormwater Narrative (within plans) to Include:		
• Pre and post site conditions	☐	☐
• Disturbed area	☐	☐
• Existing and proposed impervious areas including a net change in impervious calculation	☐	☐
• VSMP authority	☐	☐
Stormwater Plans to include:		
• SW facility locations and descriptions	☐	☐
• Location of all SWM discharges	☐	☐
• Acres treated by SWM facility	☐	☐
• Pre/Post Drainage maps	☐	☐
• Limits of clearing and grading	☐	☐
• Information on adjoining parcels	☐	☐
• Location of wetlands or other sensitive habitat within the project	☐	☐
• Description, type, and schedule of stabilization practices provided	☐	☐
Hydrologic and hydraulic calculations (i.e. Drainage area calcs, storm design/HGL calcs, Pondpack Routings Compliance calculations for water quality and quantity (IIB or IIC)	☐	☐
All sources of runoff converted to surface runoff	☐	☐
Soil stockpile stabilization addressed	☐	☐
Designated a qualified individual to inspect all BMPs	☐	☐

Capital Outlay & Facilities
PO Box 9414
VSU, VA 23806
Phone: (804)-504-7500
Fax: (804-524-5383

Included name and telephone number for the qualified person	☐	☐
Post construction maintenance requirements provided.	☐	☐

PLAN IN COMPLIANCE WITH:

Part IIB Water quality design criteria (9VAC25-870-63)	☐	☐
Water quality compliance criteria (9VAC25-870-65)	☐	☐
Water quantity criteria (9VAC25-870-66)	☐	☐
Offsite compliance options criteria (9VAC25-870-69)	☐	☐
OR, Part IIC Water quality design criteria (9VAC25-870-96)	☐	☐
Stream channel erosion (9VAC25-870-97)	☐	☐
Flooding (9VAC25-870-98)	☐	☐
Regional Stormwater Management Plans (9VAC25-870-99)	☐	☐

PROJECT NAME: _____ **SUBMITTAL#:** _____

PLANS DATED: _____ **NARRATIVE DATED:** _____

_____	_____	_____
Print	Professional's Signature	Date

APPENDIX C

UTILIZED WATER QUALITY CREDITS FROM REGIONAL BMPS

Capital Outlay & Facilities
PO Box 9044
VSU, VA 23806
Phone: (804)-504-7500
Fax: (804)-524-5383

Utilized Water Quality Credits from "Regional" BMPs

VSU Projects	Water Quality Credits Used (lbs/yr)	Water Quality Credits Available (lbs/yr)
Campus Nutrient Credit Bank[1]	-	24.23

[1] As documented in the ***Virginia State University Stormwater Master Plan – Addendum***, prepared April 9, 2018.

APPENDIX D

STANDARD STORM WATER POLLUTION PREVENTION (SWPPP) TEMPLATE

APPENDIX E

STANDARD STORM WATER POLLUTION PREVENTION SPECIFICATION

Capital Outlay & Facilities
PO Box 9044
VSU, VA 23806
Phone: (804)-504-7500
Fax: (804)-524-5383

SECTION 31 2514 - STORM WATER POLLUTION PREVENTION

PART 1 - GENERAL

1.1 RELATED DOCUMENTS

A. Drawings, Contract and Special Provisions, Supplementary Conditions, latest version of the Virginia Erosion and Sediment Control Handbook, latest version of the applicable Stormwater Management Handbook, and other Division *[List Section Number Here]* Specifications apply to this Section.

1.2 SUMMARY

A. This Section includes instruction for completion and maintaining a Storm Water Pollution Prevention Plan (SWPPP). The campus-wide SWPPP template provided by the A/E shall be used and updated accordingly when work is performed within the campus MS4 Boundary.

B. Related Sections

1. Division *[List Section Number Here]* Section *[List Section Name Here]*

1.3 DEFINITIONS

A. CWA- Clean Water Act means the law passed by the Congress of the United States in 1972 controlling the Discharge of Pollutants into the Nation's waterways.

B. BMP- Best Management Practices are defined as anyone or group of management practices, activities, policies, equipment, and structures that will: prevent pollutants from entering the environment, minimize pollutants from entering the environment, and mitigate, reduce, and treat prior to the pollutant entering the environment.

C. NPDES- National Pollutant Discharge Elimination System is the national program for issuing, modifying, revoking, reissuing, terminating, monitoring and enforcing permits pursuant to sections 402, 318, and 405 of the CWA.

D. VDEQ- Virginia Department of Environmental Quality is the agency of the Commonwealth of Virginia that manages the Commonwealth of Virginia's environmental regulations.

E. VPDES- Virginia Pollutant Discharge Elimination System is the Commonwealth of Virginia program and regulations that describe the proper management of discharges of pollutants into the waters of the Commonwealth of Virginia.

Capital Outlay & Facilities
PO Box 9044
VSU, VA 23806
Phone: (804)-504-7500
Fax: (804)-524-5383

1.4 Submittals

A. Storm Water Pollution Prevention Plan (SWPPP) – Using the campus wide SWPPP template provided by the A/E, complete the Contractor sections in accordance with the information provided below and submit for written approval by the University. In addition, the SWPPP will serve as the Soil Erosion and Sediment Control Plan required as a condition of the University's issuance of a Land Disturbance/Stormwater Permit by the University's Capital Outlay Department. Issuance of this Land Disturbance/Stormwater Permit is required prior to initiation of any project construction.
   1. Complete the SWPPP Coordinator section
   2. Complete the Qualified Personnel section (Appendix 5)
   3. Complete the Pollution Prevention Plan section or create and P2 Plan Sheet illustrating all areas of potential pollutant discharge (Appendix 8)

B. The University has acquired a single Virginia Storm Water Management Program (VSMP) general construction permit registration from the Virginia Department of Environmental Quality (DEQ) to cover construction activities within the MS4 boundary. The contractor is responsible for compliance with all provisions of the VSMP permit on the University's behalf. The contractor will use the campus-wide SWPPP template and will be responsible for maintaining the current SWPPP documentation listed below for this project.
   1. Record of all land disturbance (Appendix 4)
   2. Record of regularly performed inspections (Appendix 4)
   3. Record of corrective actions taken (Appendix 4)
   4. Record of SWPPP amendments, modifications and updates (Appendix 10)

C. Within 30 days of project stabilization, and in lieu of submitting the Notice of Project Termination, all hardcopy records and an electronic record of the SWPPP information will be provided to the University for their documentation purposes.

D. Immediately notify the University of any changes that affect the information on the registration statement, permit fee form, and/or permit coverage. The University will then notify the DEQ with this information by sending it to *constructionGP@deq.virginia.gov*.

1.5 Quality Assurance

A. Prepare and submit the SWPPP with input from each subcontractor.

PART 2 - PRODUCTS

2.1 General

A. Provide erosion and sediment control devices and products as indicated, in accordance with the SWPPP and in accordance with the latest updated version of the Virginia Erosion and Sediment Control Handbook.

Capital Outlay & Facilities
PO Box 9044
VSU, VA 23806
Phone: (804)-504-7500
Fax: (804)-524-5383

PART 3 - EXECUTION

3.1 Implementation

A. Implement and maintain the approved SWPPP throughout the life of the contract in accordance with provisions of the Virginia Erosion and Sediment Control Handbook, the applicable Stormwater Management Handbook, and applicable contract documents.

B. Exercise every reasonable precaution, including temporary and permanent measures, throughout the duration of the project to control erosion and prevent or minimize pollution of rivers, streams, lakes and other receiving waters. Apply siltation and stabilization control measures to material, subject to erosion, exposed by any activity associated with construction including but not limited to local material sources, stockpiles, disposal areas, and haul roads.

C. Initiate stabilization measures as soon as practicable in portions of the site where construction activities have temporarily or permanently ceased but no later than 14 days after the construction activities have temporarily or permanently ceased. Except as provided in the following paragraphs:

1. If snow cover and or severe weather conditions preclude initiation of the stabilization measures by the 14th day after construction activities have ceased, either temporarily or permanently, the stabilization practices shall be initiated as soon as practicable.
2. If construction activities resume on a portion of the site within 21 days from the date that construction activities have temporarily ceased, then stabilization practices need not be initiated on that particular portion of the site by the 14th day after construction activities have temporarily ceased.

D. Be solely responsible for complying with the soil erosion, sedimentation control and good housekeeping requirements of this Contract, and for otherwise preventing contamination of stormwater from construction activities. Be solely responsible for any and all fines, penalties or damage that result from the Contractor's failure to comply.

3.2 Erosion and Siltation Control:

A. Control erosion and siltation through the use of the devices and measures specified herein, in the approved SWPPP or as is otherwise necessary. The University reserves the right to require other temporary measures not specifically described herein to correct an erosion or siltation condition.

B. Maintenance: Maintain erosion and siltation control devices and measures in a functional condition at all times. Inspect temporary and permanent erosion and sedimentation control measures after each rainfall and at least daily during periods of prolonged rainfall. Correct deficiencies immediately. Make a daily review of the location of erosion and sediment control devices to ensure that they are properly located for effectiveness. Where deficiencies exist, make corrections immediately as approved or directed by the University.

Capital Outlay & Facilities
PO Box 9044
VSU, VA 23806
Phone: (804)-504-7500
Fax: (804)-524-5383

PART 4 - CONTRACTOR'S QUALITY CONTROL

4.1 Field Quality Control

A. Conform to all applicable provisions of Division *[List Section Number Here]* Section *[List Section Name Here]*. Perform regular inspections in accordance with the approved SWPPP. The results of the regular inspections shall be submitted to the University upon completion.

APPENDIX F

ESC & SWM INSPECTION REPORTS

Capital Outlay & Facilities
PO Box 9044
VSU, VA 23806
Phone: (804)-504-7500
Fax: (804)-524-5383

ESC/SWM INSPECTION REPORT

(To be completed by VSU DEQ-Certified personnel, and where VSU is the GCP Holder)

Project Name:_____ Project Authority:_____

RLD Name:_____ RLD No._____

Project Location:_____Project No:_____

Inspector Name:_____ Inspection Date:_____Time:_____

Most Recent Measurable Storm Event: Date:_____ Amount:_____

Previous violation(s) been corrected: ☐ YES or ☐ NO

STAGE OF CONSTRUCTION

Pre-Construction Conference ☐
Clearing & Grubbing ☐
Rough Grading ☐
Building Construction ☐
Finish Grading ☐
Final Stabilization ☐
Construction of SWM Facilities ☐
Maintenance of SWM Facilities ☐
*Other*_____ ☐

Item#	*State/Local Regulation* [1]	*Violation*		*Description and Location of Problem/Violation* [2]*, Required or Recommended Corrective Actions, and Other Comments/Notes*
		Initial	*Repeat*	

1. Refers to applicable regulation found in the most recent publication of the Virginia Erosion and Sediment Control Regulations (9VAC25-840), Virginia Stormwater Management Permit Regulations (9VAC25-870), or Annual Standards and Specifications for ESC and SWM
2. Note whether or not off-site damage resulting from the problem/violation was evident during the inspection.

REQUIRED CORRECTIVE ACTION DEADLINE DATE:_____Re-inspection Date:_____
(DD/MM/YY) (DD/MM/YY)

The required corrective action deadline date applies to <u>all violations</u> noted on this report. If listed violation(s) currently constitute non-compliance and/or required corrective actions are not completed by the deadline, a **NOTICE TO COMPLY, STOP WORK ORDER**, and/or other enforcement actions may be issued to the entity responsible for ensuring compliance on the above project.

Inspector:_____ _____
Signature and DEQ Certificate Number Date

*Acknowledgement of on-site report receipt:*_____ _____ _____
Print Name *Signature* *Date*

This report will be provided to the following parties via mail, fax, or e-mail within 24 hours of inspection:
_____
_____

Capital Outlay & Facilities
PO Box 9044
VSU, VA 23806
Phone: (804)524-3971
Fax: (804)524-5383

ESC/SWM INSPECTION REPORT, continued

(To be completed by VSU DEQ-Certified personnel)

Project Name:_____ Project Authority:_____

Item#	*State/Local Regulation (1)*	*Violation*		*Description and Location of Problem/Violation (2), Required or Recommended Corrective Actions, and Other Comments/Notes*
		Initial	*Repeat*	

1. Refers to applicable regulation found in the most recent publication of the Virginia Erosion and Sediment Control Regulations (9VAC25-840), Virginia Stormwater Management Permit Regulations (9VAC25-870), or Annual Standards and Specifications for ESC and SWM
2. Note whether or not off-site damage resulting from the problem/violation was evident during the inspection.

*Acknowledgement of on-site report receipt:*_____ _____ _____
Print Name *Signature* *Date*

This report will be provided to the following parties via mail, fax, or e-mail within 24 hours of inspection:

_____

_____

APPENDIX G

VARIANCE REQUEST FORM

Capital Outlay & Facilities
PO Box 9414
VSU, VA 23806
Phone: (804)-504-7500
Fax: (804)-524-5383

VARIANCE REQUEST

Requested by:_____Date:_____

Street Address:_____

City/Town/Zip:_____

Telephone #: _____Fax #:_____

E-mail address:_____

Project Name/Location:_____

_____

Project Description:_____

_____

_____

Variance requested for (state appropriate minimum standard & requirement):_____

_____

_____

_____

Reasons/Justification for Variance Request and Specific Site Conditions Necessitating the

Request:_____

_____

_____

_____

_____

Designers Signature: _____Date:_____

Signature of applicant: _____Date:_____

Providing supporting documentation (sketches, calculations, etc…) as necessary to support request
(NOTE: All approved Variance Requests will be considered part of the ESC/SWM Plan.)

Revised
5/2/2019

APPENDIX H

EXCEPTION REQUEST FORM

Capital Outlay & Facilities
PO Box 9414
VSU, VA 23806
Phone: (804)-504-7500
Fax: (804)-524-5383

EXCEPTION REQUEST

Requested by:_____Date:_____

Street Address:_____

City/Town/Zip:_____

Telephone #: _____Fax #:_____

E-mail address:_____

Project Name/Location:_____

_____

Project Description:_____

_____

Exception requested for (state appropriate minimum standard & requirement):_____

_____

_____

Reasons/Justification for Exception Request and Specific Site Conditions Necessitating the Request:_____

_____

_____

_____

Mitigating Measures:_____

_____

_____

Designers Signature: _____Date:_____

Signature of applicant: _____Date:_____

Providing supporting documentation (sketches, calculations, etc…) as necessary to support request

(NOTE: All approved Exception Requests will be considered part of the ESC/SWM Plan.)

Revised
5/2/2019

Capital Outlay & Facilities
PO Box 9414
VSU, VA 23806
Phone: (804)-504-7500
Fax: (804)-524-5383

APPENDIX I

PRE-APPROVED DEVIATIONS

Revised
5/2/2019

Capital Outlay & Facilities
PO Box 9414
VSU, VA 23806
Phone: (804)-504-7500
Fax: (804)-524-5383

SUMMARY OF PRE-APPROVED NON-VESCH PROPRIETARY CONTROL MEASRUES

Practice	Definition	Purpose	Conditions where practice applies	Planning Considerations	Design Criteria	Construction Specifications	Design Tables and Plates	Maintenance	Inspections
VSU-VAR01: DANDY CURB BAG®	Note 1	Note 1	DI-2, curb drop inlet (with grate) downstream of disturbance.	Light sediment accumulation expected.	Note 3	Note 2	Note 6	Note 4	Note 5
VSU-VAR02: DANDY BAG®	Note 1	Note 1	DI-1, drop inlet (yard grate) downstream of disturbance.	Light sediment accumulation expected.	Note 3	Note 2	Note 6	Note 4	Note 5
VSU-VAR03: DANDY CURB®	Note 1	Note 1	DI-3, curb inlet downstream of disturbance.	Light sediment accumulation expected.	Note 3	Note 2	Note 6	Note 4	Note 5
VSU-VAR04: DANDY SACK®	Note 1	Note 1	DI-1, drop inlet (yard grate) downstream of disturbance.	Heavy sediment accumulation expected.	Note 3	Note 2	Note 6	Note 4	Note 5
VSU-VAR05: DANDY CURB SACK®	Note 1	Note 1	DI-2, curb drop inlet (with grate) downstream of disturbances.	Heavy sediment accumulation expected.	Note 3	Note 2	Note 6	Note 4	Note 5
VSU-VAR06: DANDY POP®	Note 1	Note 1	DI-1, drop inlet (yard grate) downstream of disturbance.	Heavy ponding expected.	Note 3	Note 2	Note 6	Note 4	Note 5
VSU-VAR07: DANDY DEWATERING BAG™	Note 1	Note 1	When dewatering trenches or basins.		Note 3	Note 2	Note 6	Note 4	Note 5
VSU-VAR08: GUTTER BUDDY™	Note 1	Note 1	DI-3, curb inlet downstream of disturbance.	Light sediment accumulation expected.	Note 3	Note 2	Note 6	Note 4	Note 5
VSU-VAR09: SILT SACK®	Note 1	Note 1	DI-7, drop inlet (yard grate) downstream of disturbance.	Heavy sediment accumulation expected.	Note 3	Note 2	Note 6	Note 4	Note 5
VSU-VAR10: AlturnaMats® & VersaMats ®	Ground protection mat	Prevent ground compression and rutting	Heavy equipment travel lanes over natural ground where installation of stone construction entrance is not practical.	Needed to prevent damage during heavy equipment travel over fragile or soft natural ground.	Size based on needed travel lane width.	½" thick polyethylene	Note 6	No maintenance required, replace mats as needed.	Note 5

Notes
1: See product specification sheet, Section 1 – Description.
2: See product specification sheet, Section 2 – Material.
3: See product specification sheet, Section 3 – Installation.
4: See product specification sheet, Section 4 – Maintenance.
5: After each storm event and at regular intervals
6: See end of product specification sheet.

Capital Outlay & Facilities
PO Box 9414
VSU, VA 23806
Phone: (804)-504-7500
Fax: (804)-524-5383

VSU-VAR01: DANDY CURB BAG®

DANDY CURB BAG™

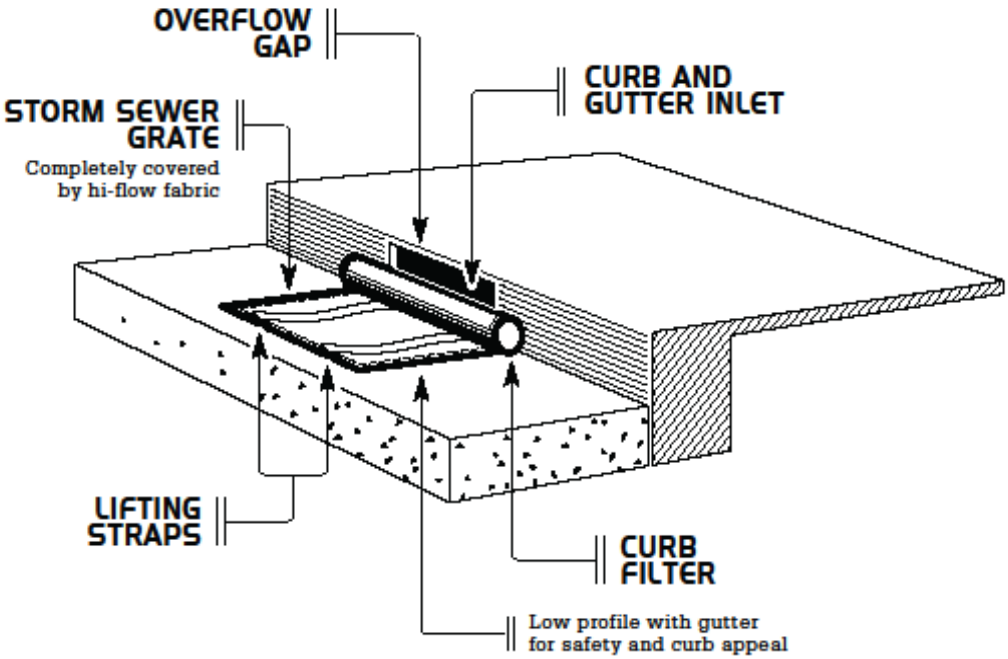

Revised
5/2/2019

Capital Outlay & Facilities
PO Box 9414
VSU, VA 23806
Phone: (804)-504-7500
Fax: (804)-524-5383

DANDY CURB BAG®
CURB AND GUTTER INLET/GRATE PROTECTION SYSTEM
GUIDE SPECIFICATION

PRODUCT: DANDY CURB BAG®

MANUFACTURER: Dandy Products, Inc.
P.O. Box 1980
Westerville, Ohio 43086
Phone: 800-591-2284
Fax: 740-881-2791
E-mail: dlc@dandyproducts.com
Web: www.dandyproducts.com

1.0 Description:

1.1 Work covered under this item consists of installing a Dandy Curb Bag® curb and gutter inlet protection system. The purpose is to keep silt, sediment and construction debris out of the storm water system.

2.0 Material:

2.1 The Dandy Curb Bag® curb and gutter inlet protection unit shall be a **sewn in the U.S.A.** geotextile fabric unit enclosing a porous structure in the form of a cylindrical tube placed in front of and extending beyond the inlet opening on both sides and have a geotextile fabric envelope fitted to the individual grate(s)on the street side of the sewn unit for grate(s) to be inserted and to completely enclose the grate(s).

2.2 The Dandy Curb Bag® shall have lifting devices to allow manual inspection of the storm water system.

2.3 The Dandy Curb Bag® unit shall utilize an orange monofilament fabric that is manufactured in the U.S.A. with the following characteristics:

PROPERTY	TEST METHOD	UNITS	TEST RESULTS
Grab Tensile Strength	ASTM D 4632	lbs	450 x 300
Grab Tensile Elongation	ASTM D 4632	%	40 x 25
Puncture Strength	ASTM D 4833	lbs	130
Mullen Burst Strength	ASTM D 3786	psi	600
Trapezoid Tear Strength	ASTM D 4533	lbs	165 x 150
% Open Area (POA)	COE - 22125-86	%	28
Apparent Opening Size	ASTM D 4751	US Std Sieve	30
Permittivity	ASTM D 4491	sec[1]	3.5
Permeability	ASTM 4491	cm/sec	0.25
Water Flow Rate	ASTM 4491	gal/min/ft^2	250
Ultraviolet Resistance	ASTM D 4355	%	70
Color			Orange[1]

[1]The color orange is a trademark of Dandy Products, Inc.
The property values listed above are effective October 2010 and are subject to change without notice.

Revised
5/2/2019

Capital Outlay & Facilities
PO Box 9414
VSU, VA 23806
Phone: (804)-504-7500
Fax: (804)-524-5383

3.0 Installation:

3.1 Place the empty Dandy Curb Bag® unit over the grate as the grate stands on end.

3.2 *For oil and sediment model; to install or replace absorbent, place absorbent pillow in pouch, on the bottom (below-grade side) of the unit.*

3.3 Tuck the enclosure flap inside to completely enclose the grate.

3.4 Holding the lifting devices, being careful not to damage the sewn fabric unit, insert the grate into its frame, street side edge first, then lower back edge with cylindrical tube into place. The cylindrical tube should be partially blocking the curb hood opening when installed properly.

4.0 Maintenance:

4.1 The contractor shall remove all accumulated sediment and debris from surface and vicinity of unit after each rain event or as directed by engineer/inspector. Dispose of unit no longer in use at an appropriate recycling or solid waste facility.

4.2 *For oil and sediment model; remove and replace absorbent when near saturation.*

5.0 Method of Measurement:

5.1 The quantity to be paid is for the actual number of Dandy Curb Bag® inlet protection units installed.

6.0 Basis of payment:

6.1 The unit price shall include labor, equipment, and materials necessary to complete the work and maintain the Dandy Curb Bag® inlet protection units.

6.2 Payment for the completed work will be made at the contract prices for:

ITEM	UNIT	DESCRIPTION
Dandy Curb Bag®	EA	Curb Inlet Protection Unit (#_____Inlet)

Revised
5/2/2019

Capital Outlay & Facilities
PO Box 9414
VSU, VA 23806
Phone: (804)-504-7500
Fax: (804)-524-5383

VSU-VAR02: DANDY BAG®

DANDY BAG®

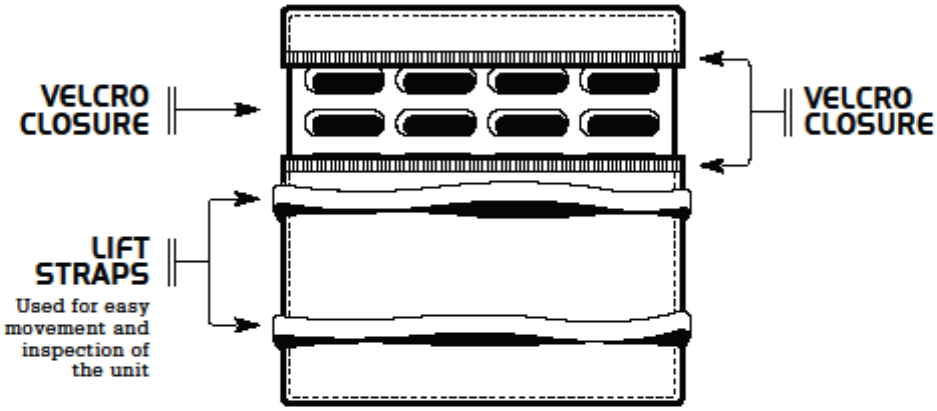

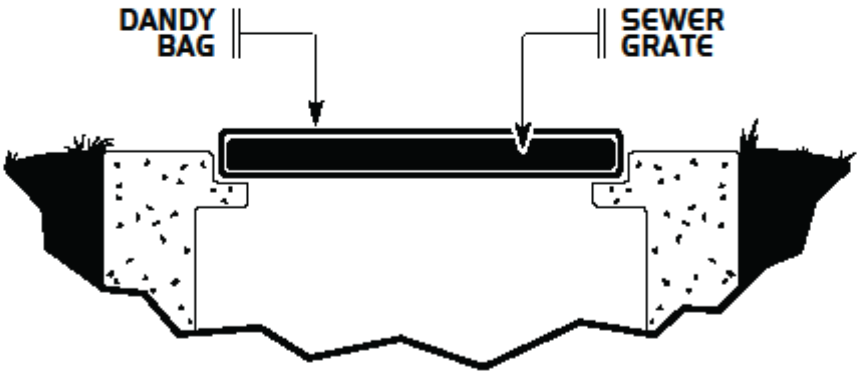

Revised
5/2/2019

Capital Outlay & Facilities
PO Box 9414
VSU, VA 23806
Phone: (804)-504-7500
Fax: (804)-524-5383

DANDY BAG®
INLET PROTECTION SYSTEM GUIDE SPECIFICATION

PRODUCT: DANDY BAG®
MANUFACTURER: Dandy Products Inc.
P.O. Box 1980
Westerville, Ohio 43086
Phone: 800-591-2284
Fax: 740-881-2791
E mail: dlc@dandyproducts.com
Web: www.dandyproducts.com

1.0 Description:

1.1 Work covered under this item consists of installing a Dandy Bag® inlet protection system. The purpose is to keep silt, sediment and construction debris out of the storm water system.

2.0 Material:

2.1 The Dandy Bag® inlet protection unit shall be a **sewn in the U.S.A**. geotextile fabric unit fitted to the individual grate(s) and completely enclosing the grate(s).

2.2 The Dandy Bag® shall have lifting devises to allow manual inspection of the storm water system.

2.3 The Dandy Bag® unit shall utilize an orange monofilament fabric manufactured in the U.S.A. with the following characteristics:

PROPERTY	TEST METHOD	UNITS	TEST RESULTS
Grab Tensile Strength	ASTM D 4632	lbs	450 X 300
Elongation	ASTM D 4632	%	40% X 25%
Puncture Strength	ASTM D 4833	lbs	130
Mullen Burst Strength	ASTM D 3786	psi	600
Trapezoid Tear Strength	ASTM D 4533	lbs	165 x 150
% Open Area (POA)	COE - 22125-86	%	28
Apparent Opening Size	ASTM D 4751	US Std Sieve	30
Permittivity	ASTM D 4491	sec[1]	3.5
Permeability	ASTM 4491	cm/sec	0.25
Water Flow Rate	ASTM 4491	gal/min/ft^2	250
Ultraviolet Resistance	ASTM D 4355	%	70
Color			Orange[1]

[1]The color orange is a trademark of Dandy Products, Inc.
The property values listed above are effective October 2010 and are subject to change without notice.

3.0 Installation:

3.1 Place the empty Dandy Bag® over the grate as the grate stands on end.

3.2 For oil and sediment model; to install or replace absorbent, place absorbent pillow in pouch, on the bottom (below-grade side) of the unit.

Revised
5/2/2019

Capital Outlay & Facilities
PO Box 9414
VSU, VA 23806
Phone: (804)-504-7500
Fax: (804)-524-5383

3.3 Tuck the enclosure flap inside to completely enclose the grate.

3.3 Holding the lifting devises, insert the grate into the inlet being careful not to damage the Dandy Bag® unit.

4.0 Maintenance:

4.1 The contractor shall remove all accumulated sediment and debris from surface and vicinity of unit after each rain event or as directed by engineer/inspector. Dispose of unit no longer in use at an appropriate recycling or solid waste facility.

4.2 *For oil and sediment model; remove and replace absorbent when near saturation.*

5.0 Method of Measurement:

5.1 The quantity to be paid is for the actual number of Dandy Bag® inlet protection units installed.

6.0 Basis of Payment:

6.1 The unit price shall include labor, equipment, and materials necessary to complete the work and maintain the Dandy Bag® inlet protection units.

6.2 Payment for the completed work will be made at the contract prices for:

ITEM	UNIT	DESCRIPTION
Dandy Bag®	EA	Inlet Protection Unit (#_____Inlet)

Capital Outlay & Facilities
PO Box 9414
VSU, VA 23806
Phone: (804)-504-7500
Fax: (804)-524-5383

VSU-VAR03: DANDY CURB®

DANDY CURB™

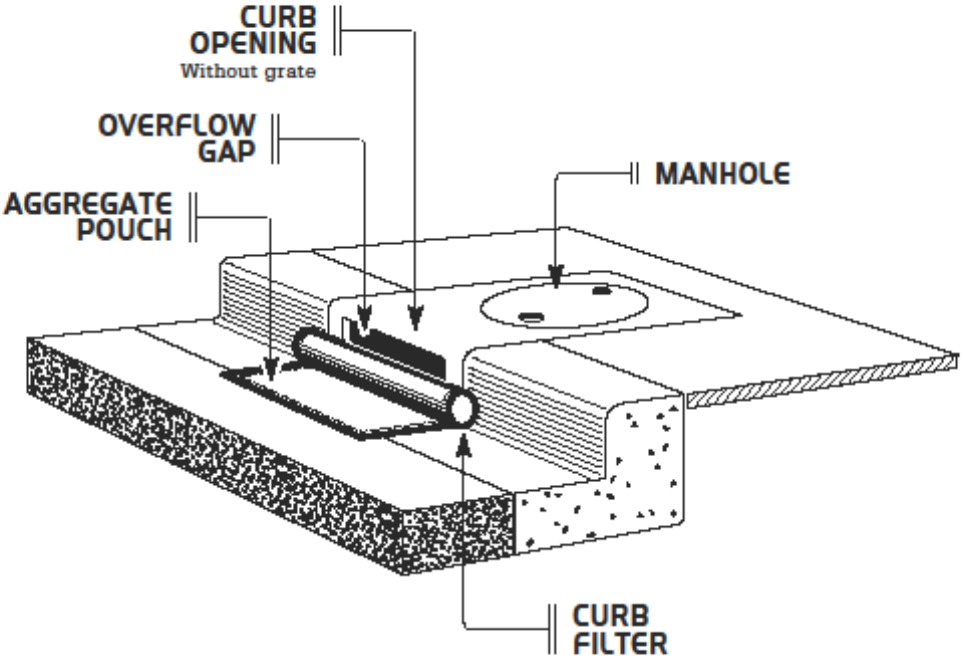

Revised
5/2/2019

Capital Outlay & Facilities
PO Box 9414
VSU, VA 23806
Phone: (804)-504-7500
Fax: (804)-524-5383

DANDY CURB®
GRATELESS CURB INLET AND MEDIAN BARRIER INLET PROTECTION SYSTEM GUIDE SPECIFICATION

PRODUCT: DANDY CURB®
MANUFACTURER: Dandy Products Inc.
P.O. Box 1980
Westerville, Ohio 43086
Phone: 800-591-2284
Fax: 740-881-2791
E mail: dlc@dandyproducts.com
Web: www.dandyproducts.com

1.0 Description:

1.1 Work covered under this item consists of installing a Dandy Curb® inlet protection system for inlets and median barrier inlets without grates. The purpose is to keep silt, sediment and construction debris out of the storm system.

2.0 Material:

2.1 The Dandy Curb® inlet protection system shall be a **sewn in the U.S.A**. fabric unit enclosing a porous structure in the form of a cylindrical tube placed in front of and extending beyond the inlet opening on both sides.

2.2 The Dandy Curb® inlet protection system shall have a pouch on the street side of the sewn unit for aggregate or other material to hold the unit in place.

2.3 The Dandy Curb® unit shall utilize an orange monofilament fabric that is manufactured in the U.S.A. with the following characteristics:

PROPERTY	TEST METHOD	UNITS	TEST RESULTS
Grab Tensile Strength	ASTM D 4632	lbs	450 x 300
Grab Tensile Elongation	ASTM D 4632	%	40 x 25
Puncture Strength	ASTM D 4833	lbs	130
Mullen Burst Strength	ASTM D 3786	psi	600
Trapezoid Tear Strength	ASTM D 4533	lbs	165 x 150
% Open Area (POA)	COE - 22125-86	%	28
Apparent Opening Size	ASTM D 4751	US Std Sieve	30
Permittivity	ASTM D 4491	sec[1]	3.5
Permeability	ASTM 4491	cm/sec	0.25
Water Flow Rate	ASTM 4491	gal/min/ft^2	250
Ultraviolet Resistance	ASTM D 4355	%	70
Color			Orange[1]

[1]The color orange is a trademark of Dandy Products, Inc.
The property values listed above are effective October 2010 and are subject to change without notice.

3.0 Installation:

3.1 Place Dandy Curb® inlet protection unit on ground with aggregate pouch on street side near inlet it will be installed on.

Revised
5/2/2019

Capital Outlay & Facilities
PO Box 9414
VSU, VA 23806
Phone: (804)-504-7500
Fax: (804)-524-5383

3.2 For oil and sediment model, to install or replace absorbent, place absorbent sock in pouch.

3.3 Fill pouch with aggregate such as #5-7, 8's or similar to a level (at least ½ full) that will keep unit in place during a rain event and create a seal between the Dandy Curb® and the surface of the street. Reseal Velcro access.

3.4 Center the unit against curb or median inlet opening so that the curb side of the unit creates a seal with the curb or median barrier and inlet structure. There will be approximately twelve (12) inches of the inlet protection unit overhanging on each side of the opening. If the unit is not installed in this manner, it will not function properly.

4.0 Maintenance:

4.1 The contractor shall remove all accumulated sediment and debris from surface and vicinity of unit after each rain event or as directed by engineer/inspector. Dispose of unit no longer in use at an appropriate recycling or solid waste facility.

4.2 *For oil and sediment model; remove and replace absorbent when near saturation.*

5.0 Method of Measurement:

5.1 The quantity to be paid is for the actual number of Dandy Curb® inlet protection units installed.

6.0 Basis of payment:

6.1 The unit price shall include labor, equipment, and materials necessary to complete the work and maintain the True Dam® inlet protection units.

6.2 Payment for the completed work will be made at the contract prices for:

ITEM	UNIT	DESCRIPTION
Dandy Curb®	EA	Inlet Protection Unit (#_____Inlet)

Revised
5/2/2019

Capital Outlay & Facilities
PO Box 9414
VSU, VA 23806
Phone: (804)-504-7500
Fax: (804)-524-5383

VSU-VAR04: DANDY SACK®

DANDY SACK™

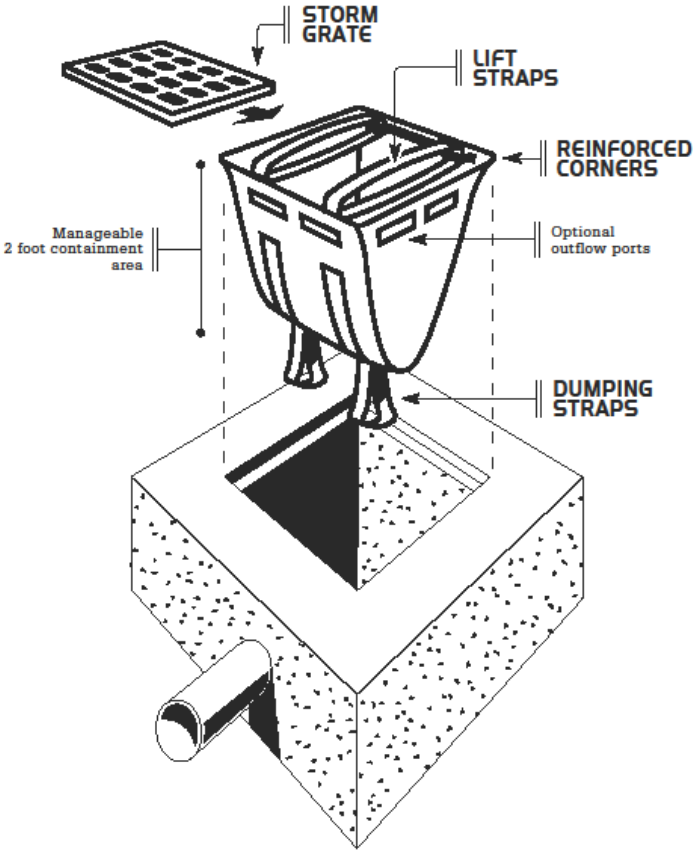

Revised
5/2/2019

Capital Outlay & Facilities
PO Box 9414
VSU, VA 23806
Phone: (804)-504-7500
Fax: (804)-524-5383

DANDY SACK®
INLET PROTECTION SYSTEM GUIDE SPECIFICATION

PRODUCT: DANDY SACK®
MANUFACTURER: Dandy Products Inc.
P.O. Box 1980
Westerville, Ohio 43086
Phone: 800-591-2284
Fax: 740-881-2791
E mail: dlc@dandyproducts.com
Web: www.dandyproducts.com

1.0 Description:

1.1 Work covered under this item consists of installing a Dandy Sack® inlet protection system. The purpose is to keep silt, sediment and construction debris out of the storm water system.

2.0 Material:

2.1 The Dandy Sack® inlet protection unit shall be a **sewn in the U.S.A.** geotextile fabric unit.

2.2 The Dandy Sack® shall have lifting straps to allow removal of the unit and manual inspection of the storm water system.

2.3 The Dandy Sack® unit shall utilize an orange monofilament fabric that is manufactured in the U.S.A. with the following characteristics:

PROPERTY	TEST METHOD	UNITS	TEST RESULTS
Grab Tensile Strength	ASTM D 4632	lbs	450 x 300
Grab Tensile Elongation	ASTM D 4632	%	40 x 25
Puncture Strength	ASTM D 4833	lbs	130
Mullen Burst Strength	ASTM D 3786	psi	600
Trapezoid Tear Strength	ASTM D 4533	lbs	165 x 150
% Open Area (POA)	COE - 22125-86	%	28
Apparent Opening Size	ASTM D 4751	US Std Sieve	30
Permittivity	ASTM D 4491	sec[1]	3.5
Permeability	ASTM 4491	cm/sec	0.25
Water Flow Rate	ASTM 4491	gal/min/ft^2	250
Ultraviolet Resistance	ASTM D 4355	%	70
Color			Orange[1]

1The color orange is a trademark of Dandy Products, Inc.
The property values listed above are effective October 2010 and are subject to change without notice.

3.0 Installation:

3.1 Remove the grate from the catch basin.

3.2 For Oil and Sediment Model; to install or replace absorbent, place absorbent pillow in unit, on the bottom (below-grade side) of the unit.

Revised
5/2/2019

Capital Outlay & Facilities
PO Box 9414
VSU, VA 23806
Phone: (804)-504-7500
Fax: (804)-524-5383

3.3 Stand the grate on end. Move the top lifting straps out of the way and place the grate into the Dandy Sack® unit so that the grate is below the top straps and above the lower straps. The grate should be cradled between the upper and lower straps.

3.3 Holding the lifting devices, insert the grate into the inlet, being careful that the grate remains in place and being careful not to damage the Dandy Sack® unit.

4.0 Maintenance:

4.1 Remove all accumulated sediment and debris from vicinity of unit after each storm event.

4.2 After each storm event and at regular intervals, look into the Dandy Sack® unit. If the unit is more than 1/3 full of accumulated sediment, the unit must be emptied.

4.3 To empty the unit, using the lifting straps lift the unit out of the inlet and remove the grate. Transport the unit to an appropriate location for removal of the contents. Holding the dumping straps on the outside at the bottom of the unit, turn the unit upside down, emptying the contents. Reinstall unit as above.

4.4 *For Oil and Sediment Model; remove and replace absorbent when near saturation.*

4.5 Dispose of unit and/or absorbent in accord with applicable Federal, state and local environmental laws and regulations.

5.0 Method of Measurement:

5.1 The quantity to be paid is for the actual number of Dandy Sack® inlet protection units installed.

6.0 Basis of Payment:

6.1 The unit price shall include labor, equipment, and materials necessary to complete the work and maintain the Dandy Sack® inlet protection units.

6.2 Payment for the completed work will be made at the contract prices for:

ITEM	UNIT	DESCRIPTION
Dandy Sack®	EA	Inlet Protection

Capital Outlay & Facilities
PO Box 9414
VSU, VA 23806
Phone: (804)-504-7500
Fax: (804)-524-5383

VSU-VAR05: DANDY CURB SACK®

DANDY CURB SACK™

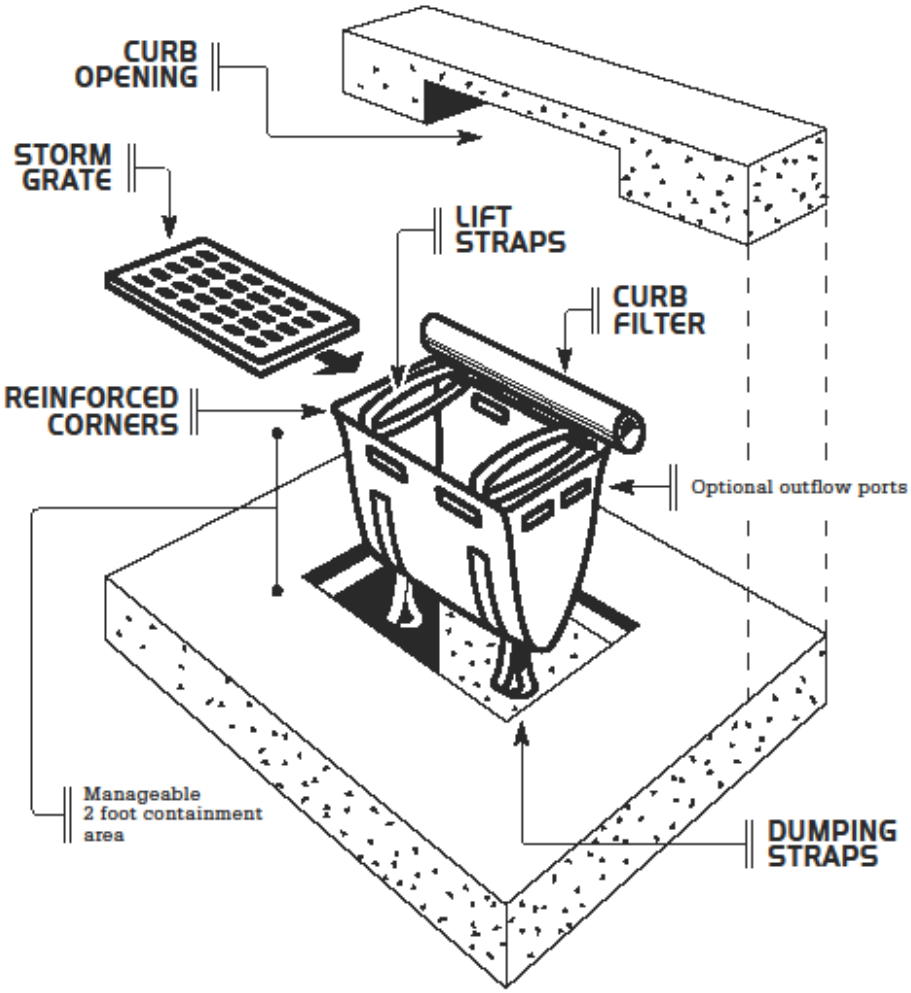

Revised
5/2/2019

Capital Outlay & Facilities
PO Box 9414
VSU, VA 23806
Phone: (804)-504-7500
Fax: (804)-524-5383

DANDY CURB SACK®
CURB AND GUTTER INLET PROTECTION SYSTEM
GUIDE SPECIFICATION

PRODUCT: DANDY CURB SACK®
MANUFACTURER: Dandy Products Inc.
P.O. Box 1980
Westerville, Ohio 43086
Phone: 800-591-2284
Fax: 740-881-2791
E mail: dlc@dandyproducts.com
Web: www.dandyproducts.com

1.0 Description:

1.1 Work covered under this item consists of installing a Dandy Curb Sack® curb and gutter inlet protection system. The purpose is to keep silt, sediment and construction debris out of the storm water system.

2.0 Material:

2.1 The Dandy Curb Sack® curb and gutter inlet protection unit shall be a sewn geotextile fabric unit **made in the U.S.A.** enclosing a porous structure in the form of a cylindrical tub placed in front and extending beyond the inlet opening on both sides and have a geotextile fabric sack attached designed to fit the opening of the catch basin or drop inlet and to hang underneath the grate and into the catch basin.

2.2 The Dandy Curb Sack® shall have lifting straps to allow removal of the unit and manual inspection of the storm water system.

2.3 The Dandy Curb Sack® unit shall utilize an orange monofilament fabric that is manufactured in the U.S.A. with the following characteristics:

PROPERTY	TEST METHOD	UNITS	TEST RESULTS
Grab Tensile Strength	ASTM D 4632	lbs	450 x 300
Grab Tensile Elongation	ASTM D 4632	%	40 x 25
Puncture Strength	ASTM D 4833	lbs	130
Mullen Burst Strength	ASTM D 3786	psi	600
Trapezoid Tear Strength	ASTM D 4533	lbs	165 x 150
% Open Area (POA)	COE - 22125-86	%	28
Apparent Opening Size	ASTM D 4751	US Std Sieve	30
Permittivity	ASTM D 4491	sec[1]	3.5
Permeability	ASTM 4491	cm/sec	0.25
Water Flow Rate	ASTM 4491	gal/min/ft^2	250
Ultraviolet Resistance	ASTM D 4355	%	70
Color			Orange[1]

1The color orange is a trademark of Dandy Products, Inc.
The property values listed above are effective October 2010 and are subject to change without notice.

Capital Outlay & Facilities
PO Box 9414
VSU, VA 23806
Phone: (804)-504-7500
Fax: (804)-524-5383

3.0 Installation:

3.1 Remove the grate from the catch basin.

3.2 For Oil and Sediment Model; to install or replace absorbent, place absorbent pillow in unit, on the bottom (below-grade side) of the unit.

3.3 Stand the grate on end. Move the top lifting straps out of the way and place the grate into the Dandy Curb Sack® unit so that the grate is below the top straps and above the lower straps. The grate should be cradled between the upper and lower straps.

3.4 Holding the lifting devices, insert the grate into the inlet, then lower back edge with cylindrical tube into place, being careful that the grate remains in place and being careful not to damage the Dandy Curb Sack® unit. The cylindrical tube should partially block the curb hood opening when installed properly.

4.0 Maintenance:

4.1 Remove all accumulated sediment and debris from vicinity of unit after each storm event.

4.2 After each storm event and at regular intervals, look into the Dandy Curb Sack® unit. If the unit is more than 1/3 full of accumulated sediment, the unit must be emptied.

4.3 To empty the unit, using the lifting straps lift the unit out of the inlet and remove the grate. Transport the unit to an appropriate location for removal of the contents. Holding the dumping straps on the outside at the bottom of the unit, turn the unit upside down, emptying the contents. Reinstall unit as above.

4.4 *For Oil and Sediment Model; remove and replace absorbent when near saturation.*

4.5 Dispose of unit and/or absorbent in accord with applicable Federal, state and local environmental laws and regulations.

5.0 Method of Measurement:

5.1 The quantity to be paid is for the actual number of Dandy Curb Sack® inlet protection units installed.

6.0 Basis of Payment:

6.1 The unit price shall include labor, equipment, and materials necessary to complete the work and maintain the Dandy Curb Sack® inlet protection units.

6.2 Payment for the completed work will be made at the contract prices for:

ITEM	UNIT	DESCRIPTION
Dandy Curb Sack®	EA	Inlet Protection Unit (#_____Inlet)

Revised
5/2/2019

Capital Outlay & Facilities
PO Box 9414
VSU, VA 23806
Phone: (804)-504-7500
Fax: (804)-524-5383

VSU-VAR06: DANDY POP®

DANDY POP™

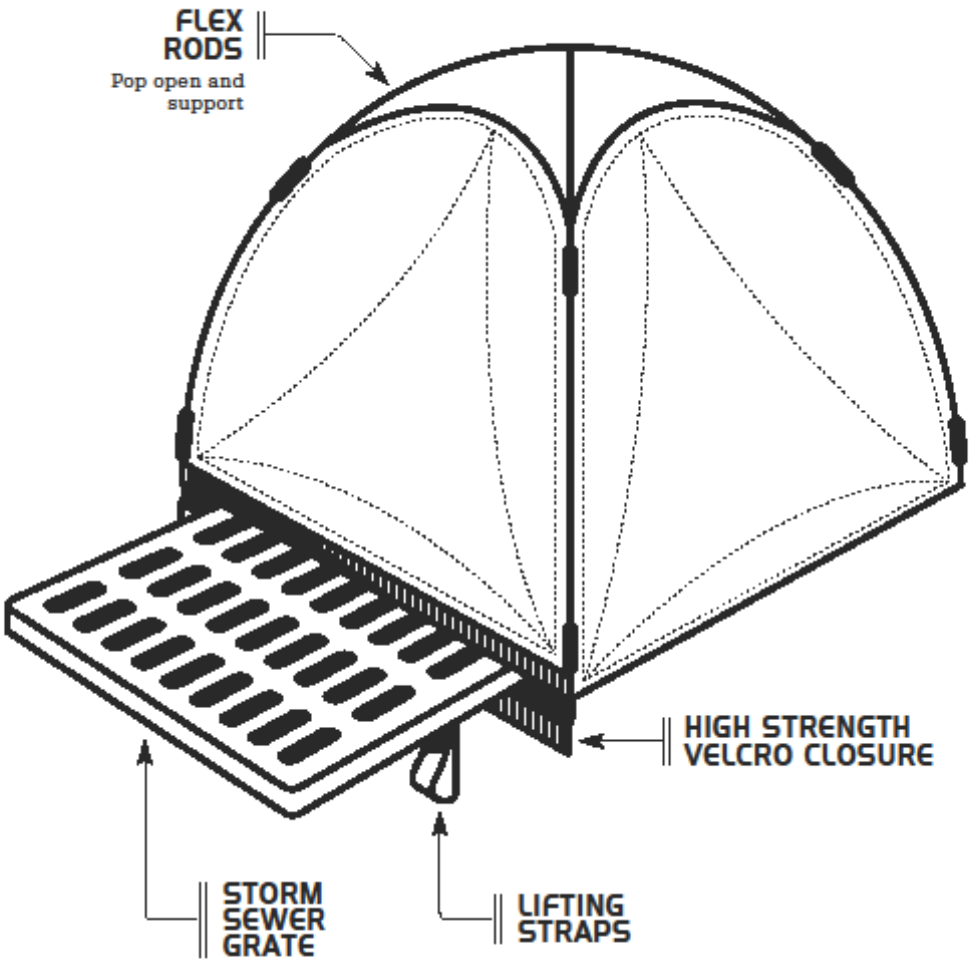

Revised
5/2/2019

Capital Outlay & Facilities
PO Box 9414
VSU, VA 23806
Phone: (804)-504-7500
Fax: (804)-524-5383

DANDY POP® (POP-UP DANDY BAG®) INLET PROTECTION SYSTEM GUIDE SPECIFICATION

PRODUCT: DANDY POP®
MANUFACTURER: Dandy Products Inc.
P.O. Box 1980
Westerville, Ohio 43086
Phone: 800-591-2284
Fax: 740-881-2791
E mail: dlc@dandyproducts.com
Web: www.dandyproducts.com

1.0 Description:

1.1 Work covered under this item consists of installing a Dandy Pop® inlet protection system. The purpose is to keep silt, sediment and construction debris out of the storm water system.

2.0 Material:

2.1 The Dandy Pop® inlet protection unit shall be a **sewn in the U.S.A**. geotextile fabric dome unit with a fully-covered support frame. The unit shall enclose the grate.

2.2 The Dandy Pop® shall unfold for installation to a height of approximately 24" (twenty-four inches).

2.3 The Dandy Pop® shall have lifting devises sewn to the bottom of the unit to assist in installation and to allow manual inspection of the storm water system.

2.4 The Dandy Pop® shall utilize an orange monofilament fabric that is manufactured in the U.S.A. with the following characteristics:

PROPERTY	TEST METHOD	UNITS	TEST RESULTS
Grab Tensile Strength	ASTM D 4632	lbs	450 x300
Grab Tensile Elongation	ASTM D 4632	%	40 x 25
Puncture Strength	ASTM D 4833	lbs	130
Mullen Burst Strength	ASTM D 3786	psi	600
Trapezoid Tear Strength	ASTM D 4533	lbs	165 x 150
% Open Area (POA)	COE - 22125-86	%	28
Apparent Opening Size	ASTM D 4751	US Std Sieve	30
Permittivity	ASTM D 4491	sec1	3.5
Permeability	ASTM 4491	cm/sec	0.25
Water Flow Rate	ASTM 4491	gal/min/ft^2	250
Ultraviolet Resistance	ASTM D 4355	%	70
Color			Orange[1]

[1]The color orange is a trademark of Dandy Products, Inc.
The property values listed above are effective October 2010 and are subject to change without notice.

3.0 Installation:

3.1 Pop open the Dandy Pop® near the inlet.

3.2 Stand the grate on end and slide the Dandy Pop® over the grate.

Revised
5/2/2019

Capital Outlay & Facilities
PO Box 9414
VSU, VA 23806
Phone: (804)-504-7500
Fax: (804)-524-5383

3.3 For oil and sediment model; to install or replace absorbent, place absorbent pillow in pouch, on the bottom (below-grade side) of the unit. As desired, or required, attach absorbent pillow to provided tether loop.

3.4 Turn the grate 180° on end (turn twice) so that the opening is facing up.

3.5 Pull up slack and seal velcro® to enclose the grate.

3.6 Lay the grate flat, and holding the lifting devises, insert the grate into the inlet making sure that the grate seats completely in the frame.

4.0 Maintenance:

4.1 The contractor shall remove all accumulated sediment and debris from panels and surface and vicinity of unit after each rain event or as directed by engineer/inspector. Dispose of unit no longer in use at an appropriate recycling or solid waste facility.

4.2 For oil and sediment model; remove and replace absorbent when near saturation.

5.0 Method of Measurement:

5.1 The quantity to be paid is for the actual number of Dandy Pop® inlet protection units installed.

6.0 Basis of payment:

6.1 The unit price shall include labor, equipment, and materials necessary to complete the work and maintain the Dandy Pop® inlet protection units.

6.2 Payment for the completed work will be made at the contract prices for:

ITEM	UNIT	DESCRIPTION
Dandy Pop®	EA	Inlet Protection Units (#_____INLET)

Revised
5/2/2019

Capital Outlay & Facilities
PO Box 9414
VSU, VA 23806
Phone: (804)-504-7500
Fax: (804)-524-5383

VSU-VAR07: DANDY DEWATERING BAG™

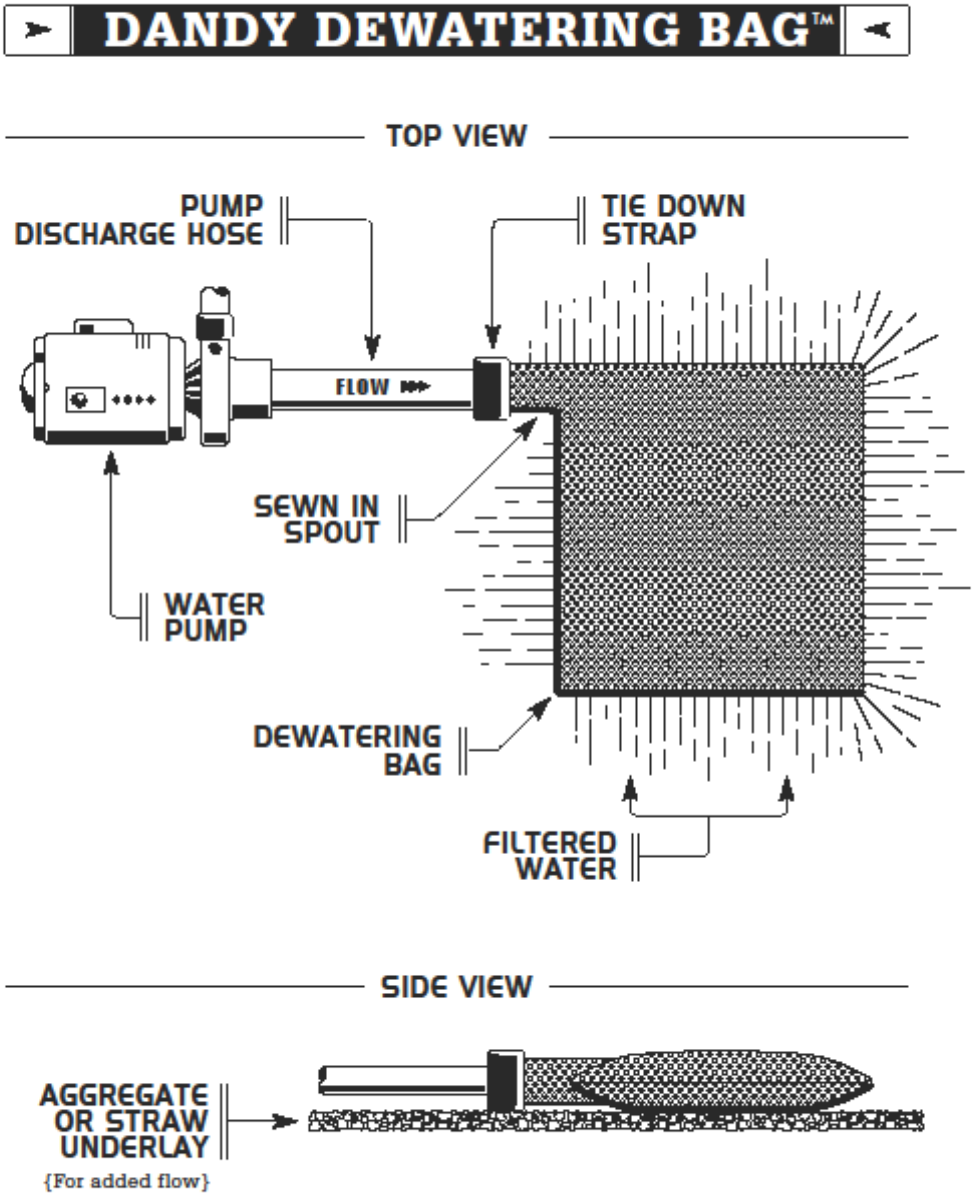

Revised
5/2/2019

Capital Outlay & Facilities
PO Box 9414
VSU, VA 23806
Phone: (804)-504-7500
Fax: (804)-524-5383

DANDY DEWATERING BAG™
PUMPED WATER SEDIMENT CONTROL SYSTEM
GUIDE SPECIFICATIONS

PRODUCT: DANDY DEWATERING BAG™
MANUFACTURER: Dandy Products Inc.
P.O. Box 1980
Westerville, Ohio 43086
Phone: 800-591-2284
Fax: 740-881-2791
E Mail: dlc@dandyproducts.com
Web: www.dandyproducts.com

1.0 Description:

1.1 Work covered under this consists of furnishing, installing, maintaining, and removal of the Dandy Dewatering Bag ™ The purpose is to control sediment discharge in any dewatering or pumped water application.

2.0 Material:

2.1 The Dandy Dewatering Bag™ shall be a bag sewn of nonwoven fabric **in the U.S.A.** using a double needle machine and a high strength thread.

2.2 The Dandy Dewatering Bag™ shall have a spout opening large enough to accommodate at least a four (4) inch pump discharge hose with an attached strap to tie unit closed.

2.3 The Dandy Dewatering Bag™ Seams shall be a double stitched "J" type seam with an average wide width strength per ASTM D-4884 of 60lb/in for a 8 oz. fabric manufactured in the U.S.A. with the following characteristics:

PROPERTY	TEST METHOD	UNITS	MARV
Grab Tensile Strength	ASTM D 4632	kN (lbs)	0.9 (205)
Grab Tensile Elongation	ASTM D 4632	%	50
Puncture Strength	ASTM D 4833	kN (lbs)	0.58 (130)
Mullen Burst Strength	ASTM D 3786	KPa (psi)	2618 (380)
Trapezoid Tear Strength	ASTM D 4533	kN (lbs)	0.36 (80)
% Open Area	COE – 22125-86	%	N/A
Apparent Opening Size	ASTM D 4751	mm (US Std Sieve)	.0180 (80)
Permittivity	ASTM D 4491	sec^1	1.2
Permeability	ASTM 4491	cm/sec	0.21
Water Flow Rate	ASTM 4491	$l/min/m^2$ ($gal/min/ft^2$)	3866 (95)
Ultraviolet Resistance	ASTM D 4355	%	70
Color			Black

3.0 **Installation:**

3.1 Lifting straps (not included) should be placed under the unit to facilitate removal after use.

Revised
5/2/2019

Capital Outlay & Facilities
PO Box 9414
VSU, VA 23806
Phone: (804)-504-7500
Fax: (804)-524-5383

3.2 Unfold Dandy Dewatering Bag™ on a stabilized area over dense vegetation, straw, or gravel (if an increased drainage surface is needed) or as detailed in plans.

3.3 Insert discharge hose from pump into Dandy Dewatering Bag™ a minimum of six (6) inches and tightly secure with attached strap to prevent water from flowing out of the unit without being filtered.

4.0 Maintenance:

4.1 Replace the unit when ½ full of sediment or when sediment has reduced the flow rate of the pump discharge to an impractical rate.

4.2 Remove and dispose of the sediment in a manner satisfactory to the engineer/inspector or in one of the following ways:

A) Remove the unit and sediment from environmentally sensitive areas and waterways. At the approved disposal site, slit the unit; remove the sediment and grade smoothly into the existing topography. Dispose of unit no longer in use at an appropriate recycling or solid waste facility.

B) Bury unit on site; remove any visible fabric and seed.

5.0 Method of Measurement:

5.1 The quantity to be paid is for the actual number of Dandy Dewatering Bags™.

6.0 Basis of Payment:

6.1 The unit price shall include labor, equipment, and materials necessary to install, maintain, and remove the Dandy Dewatering Bag™.

6.2 Payment for the completed work will be made at the contract prices for:

ITEM	UNIT	DESCRIPTION
Dandy Dewatering Bag™	EA	Pumped Water Sediment Control Unit (#_____UNITS)

Capital Outlay & Facilities
PO Box 9414
VSU, VA 23806
Phone: (804)-504-7500
Fax: (804)-524-5383

VSU-VAR08: GUTTER BUDDY™

GUTTERBUDDY

Curb Inlet Drain Filters

88.2% Reduction in Total Suspended Solids
87.4% Reduction in Hydrocarbons

Gutterbuddy™ Curb Inlet and Ditch Pavement Filters

Gutterbuddy™ Advantages

- *Easy to transport, install and maintain*
- *Keeps out sand, asphalt millings and other fine sediment*
- *Available in regular and super flow*
- *Washable*
- *Reusable*

Gutterbuddy™ Curb Inlet Filters
effectively prevent sediment, debris and other pollutants from entering storm water systems. The filtering action lets water freely flow through the fiberous material while stopping sediment and debris. Built-in over-flows drain water even more quickly during extreme events.

Long lasting Gutterbuddy™ Curb Inlet Filters are 9" in diameter and can be purchased in 4', 6', 8', 10', 12', 14' and 16' lengths. These inlet filters are flexible enough to conform to any curb radius, allowing for quick and easy installation.

Gutterbuddy™ Ditch Pavement Filters
effectively prevent sediment, debris and other pollutants from entering storm water systems or other areas that ditch pavement is used to channel water runoff. Their filtering action lets water freely flow through the fiberous material while stopping sediment and debris. Each ditch pavement filter comes with a stake hole at each end and has bendable steel in the middle of the fabric that allows it to conform to all types of ditch pavement.

For more information about Gutterbuddy™ Curb Inlet and Drainage Ditch Filters, call your ACF Environmental or SI Geosolutions distributor.

PROBLEM:

Failed Inlet Protection

SOLUTION:

Gutterbuddy™ Curb Inlet Drain Filter

Revised
5/2/2019

Capital Outlay & Facilities
PO Box 9414
VSU, VA 23806
Phone: (804)-504-7500
Fax: (804)-524-5383

Gutterbuddy™ Specification

For Curb Gutter Storm Drains

1.0 Description

1.1 This work shall consist of furnishing, placing, maintaining and removing the Gutterbuddy™ sediment control device as directed by the engineer and as shown on the contract drawings. The Gutterbuddy™ sediment control system distributed by:

ACF Environmental, Inc.
2831 Cardwell Road
Richmond, Virginia 23234
Phone: 800-448-3636 • Fax: 804-743-7779
www.acfenvironmental.com

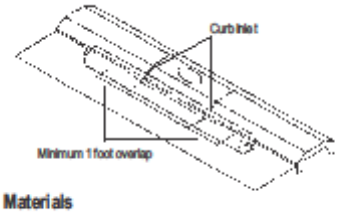

2.0 Materials

2.1 GUTTERBUDDY™

The Gutterbuddy™ shall be synthetic filter manufactured from recycled synthetic fibers.

2.1.1 The Gutterbuddy™ will be manufactured to be 9" in diameter and are available in 4', 6', 8', 10', 12', 14' and 16' lengths and a minimum of twenty-four (24) inches longer than the curb inlet opening. This will allow for sufficient length to cover the inlet with twelve (12) inches beyond the inlet on both ends.

3.0 Construction Sequence

3.1 General

3.1.1 Install the Gutterbuddy™ in front of the curb inlet opening. Each end of the Gutterbuddy™ should overlap the curb inlet approximately 12".

3.1.2 The Gutterbuddy™ should be cleaned if a visual inspection shows silt and debris build up around the Gutterbuddy™.

3.1.3 To remove the Gutterbuddy™, lift out of the opening.

3.1.4 The Gutterbuddy™ is reusable. Once the construc tion project is complete and it is no longer needed for sediment control, remove, clean and store out of the sunlight until needed on the next project.

3.1.5 Ponding is likely if sediment is not removed regularly. Inspection of Gutterbuddy™ should be on a regular basis and immediately after major rain events.

4.0 Basis of Payment

4.1 The payment for any Gutterbuddy™ used during the construction is to be included in the bid of the overall erosion and sediment control plan and priced by the linear foot.

ACF Environmental

"Complete Source for Storm Water Solutions"

THE BMP STORE

(800) 644-8223
www.thebmpstore.com

Distributed by:

2831 Cardwell Road
Richmond, Virginia 23234
(800) 448-3636 • FAX (804) 743-7779
www.acfenvironmental.com

Revised
5/2/2019

Capital Outlay & Facilities
PO Box 9414
VSU, VA 23806
Phone: (804)-504-7500
Fax: (804)-524-5383

VSU-VAR09: SILT SACK®

SILTSACK®

(U.S. Patent #5,575,925)

Catch Basin Sediment Capture Device

Keeping catch basins free of silt!

Now Available in High Visibility Yellow

Versatile

Available in 2 styles to meet your needs:

- High flow
- Regular flow

And It's Simple

- Remove drain grate
- Insert Siltsack
- Replace grate to hold Siltsack in position
- Siltsack traps silt
- Remove filled Siltsack easily
- Clean and reuse or simply discard and replace

Are you looking for a cost-effective, easy way to stop silt and sediment from entering catch basins on construction site? Siltsack is the simple and economical solution to prevent clogging of catch basins.

Siltsack is a sediment control device used to prevent silt and sediment from entering your drainage system by catching the silt and sediment while allowing water to pass through freely. Siltsack can be used as a primary or secondary sediment control device to prevent failure of your drainage system due to clogging. It must be maintained on a regular basis to function properly.

Siltsack is available in both high-flow or regular flow. A modified Siltsack is also available with a curb opening deflector attached to prevent sediment and debris from entering through curb openings. Constructed with properties shown on the Specifications page, Siltsack is a quality product designed to save time and money.

Routine inspection of a Siltsack's collected sediment level is important to prevent "ponding" around storm drains. We recommend the following maintenance schedule:

- Each Siltsack should be inspected after every major rain event.
- If there have been no major events, Siltsack should be inspected every 2-3 weeks.
- The yellow restraint cord should be visible at all times. If the cord is covered with sediment, the Siltsack should be emptied.

Revised
5/2/2019

Capital Outlay & Facilities
PO Box 9414
VSU, VA 23806
Phone: (804)-504-7500
Fax: (804)-524-5383

installed Siltsack held in place by grate.

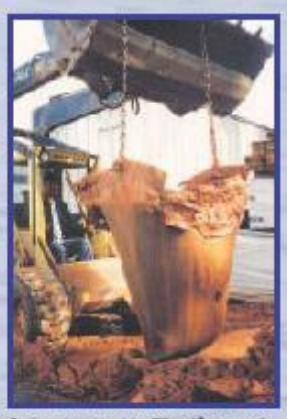

Sediment captured by Siltsack® can easily be removed from the site.

Typical Siltsack® Construction

Type A

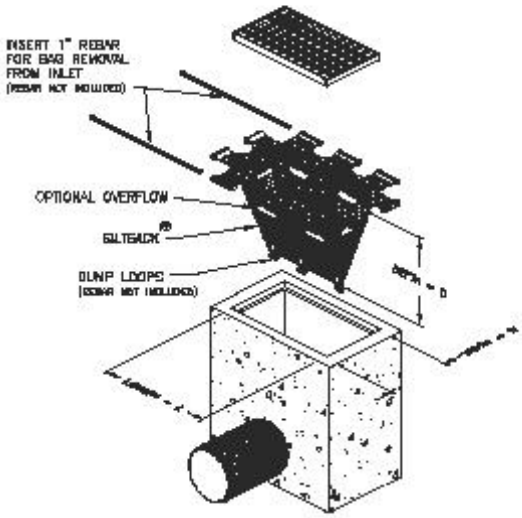

Type B

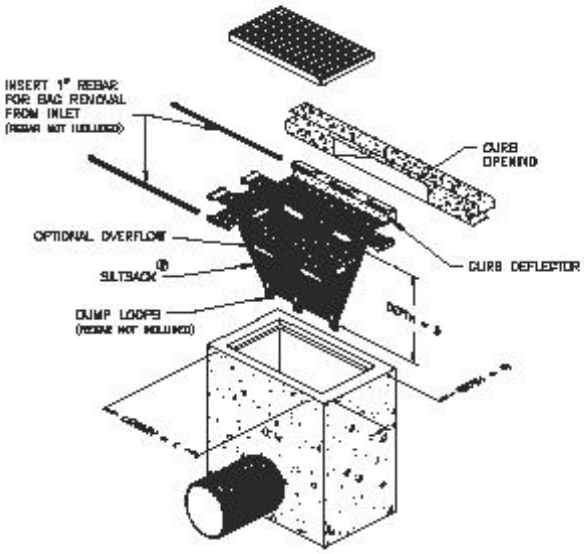

Revised
5/2/2019

Capital Outlay & Facilities
PO Box 9414
VSU, VA 23806
Phone: (804)-504-7500
Fax: (804)-524-5383

Siltsack® Specification
Control of Sediment Entering Catch Basins
(Storm Water Management)

1.0 Description

1.1 This work shall consist of furnishing, installing, maintaining, and removing Siltsack sediment control device as directed by the engineer or as shown on the site drawings. Siltsack sediment control device is manufactured by:

ACF Environmental, Inc.
2831 Cardwell Road, Richmond, Virginia 23234
Phone: 800-448-3636 • Fax: 804-743-7779
www.acfenvironmental.com

2.0 Materials

2.1 Siltsack®

2.1.1 Siltsack shall be manufactured from a specially designed woven polypropylene geotextile and sewn by a double needle machine, using a high strength nylon thread.

2.1.2 Siltsack will be manufactured to fit the opening of the catch basin or drop inlet. Siltsack will have the following features: two dump straps attached at the bottom to facilitate the emptying of Siltsack; Siltsack shall have lifting loops as an integral part of the system to be used to lift Siltsack from the basin; Siltsack shall have a restraint cord approximately halfway up the sack to keep the sides away from the catch basin walls, this yellow cord is also a visual means of indicating when the sack should be emptied. Once the cord is covered with sediment, Siltsack should be emptied, cleaned and placed back into the basin.

2.1.3 Siltsack seams shall have a certified average wide width strength per ASTM D-4884 standards as follows:

Siltsack Style	Test Method	Test Method
Regular Flow	ASTM D-4884	165.0 lbs./in
Hi-Flow	ASTM D-4884	114.6 lbs./in

Siltsack Regular Flow

Property	Test Method	Units	Test Results
Grab Tensile	ASTM D-4632	lbs.	315x300
Grab Elongation	ASTM D-4632	%	15x15
Puncture	ASTM D-4833	lbs.	125
Mullen Burst	ASTM D-3786	P.S.I.	650
Trapezoid Tear	ASTM D-4533	lbs.	120x150
UV Resistance	ASTM D-4355	%	90
Apparent Opening	ASTM D-4751	US Sieve	40
Flow Rate	ASTM D-4491	Gal/Min/Ft^2	40
Permitivity	ASTM D-4491	sec^{-1}	0.55

or SILTSACK® High Flow

Property	Specification	Units	Test Results
Material	Polypropylene		
Weight	5.6 oz/sq yd		
Color	Black		
Grab Tensile Strength	390lbs (530N)	lbs.	255x275
Grab Elongation (Max %)	30%	%	20x15
Trapezoid Tear	120 lbs (250N) Min	lbs.	40x50
Puncture	140 lbs (250N) Min	lbs.	135
Mullen Burst	600 psi	P.S.I.	420
Coefficinet of Permeability	0.04 in/sec		
Permittivity	0.3 gal/min/sq ft	sec^{-1}	1.5
Water Flow Rate	152 gal/min/sq ft	gal/min/ft^2	200
AOS	0.212mm	US Seive	40
UV Resistance Strength	90%		
Fabric Width	72"		

All properties are Minimum Average Roll Values (MARV)

3.0 Construction Sequence

3.1 General

3.1.1 To install Siltsack in the catch basin, remove the grate and place the sack in the opening. Hold approximately six inches of the sack outside the frame. This is the area of the lifting straps. Replace the grate to hold the sack in place.

3.1.2 When the restraint cord is no longer visible, Siltsack is full and should be emptied.

3.1.3 To remove Siltsack, take two pieces of 1" diameter rebar and place through the lifting loops on each side of the sack to facilitate the lifting of Siltsack.

3.1.4 To empty Siltsack, place unit where the contents will be collected. Place the rebar through the lift straps (connected to the bottom of the sack) and lift. This will lift Siltsack from the bottom and empty the contents. Clean out and rinse. Return Siltsack to its original shape and place back in the basin.

3.1.5 Siltsack is reusable. Once the construction cycle is complete, remove Siltsack from the basin and clean. Siltsack should be stored out of sunlight until next use.

4.0 Basis of Payment

4.1 Payment for all Siltsacks used during construction is to be included in the bid price for the overall erosion and sediment control plan unless unit price is requested. Maintenance of Siltsack also to be included in this price.

**Siltsack is covered by U.S. Patent No. 5,575,925*

Capital Outlay & Facilities
PO Box 9414
VSU, VA 23806
Phone: (804)-504-7500
Fax: (804)-524-5383

Installation and Maintenance

Remove grate from catch basin.

Slide Siltsack® over one side of grate.

Slide Siltsack® over opposite side of grate.

Replace Siltsack® and grate inlet into recess.

Installed Siltsack®.

To remove Siltsack®, clean area around grate and slide rebar through Siltsack® pockets.

Slowly remove Siltsack® from inlet.

Removed Siltsack® is now ready for cleanout.

To clean Siltsack® attach rebar through empty loops at bottom and lift to empty.

ACF Environmental

"Complete Source for Stormwater Solutions"

2831 Cardwell Road
Richmond, Virginia 23234
(800) 448-3636 • FAX (804) 743-7779
www.acfenvironmental.com

Distributed by:

(800) 644-9223
www.thebmpstore.com

3/08

Revised
5/2/2019

Capital Outlay & Facilities
PO Box 9414
VSU, VA 23806
Phone: (804)-504-7500
Fax: (804)-524-5383

VSU-VAR10: AlturnaMats® & VersaMats ®

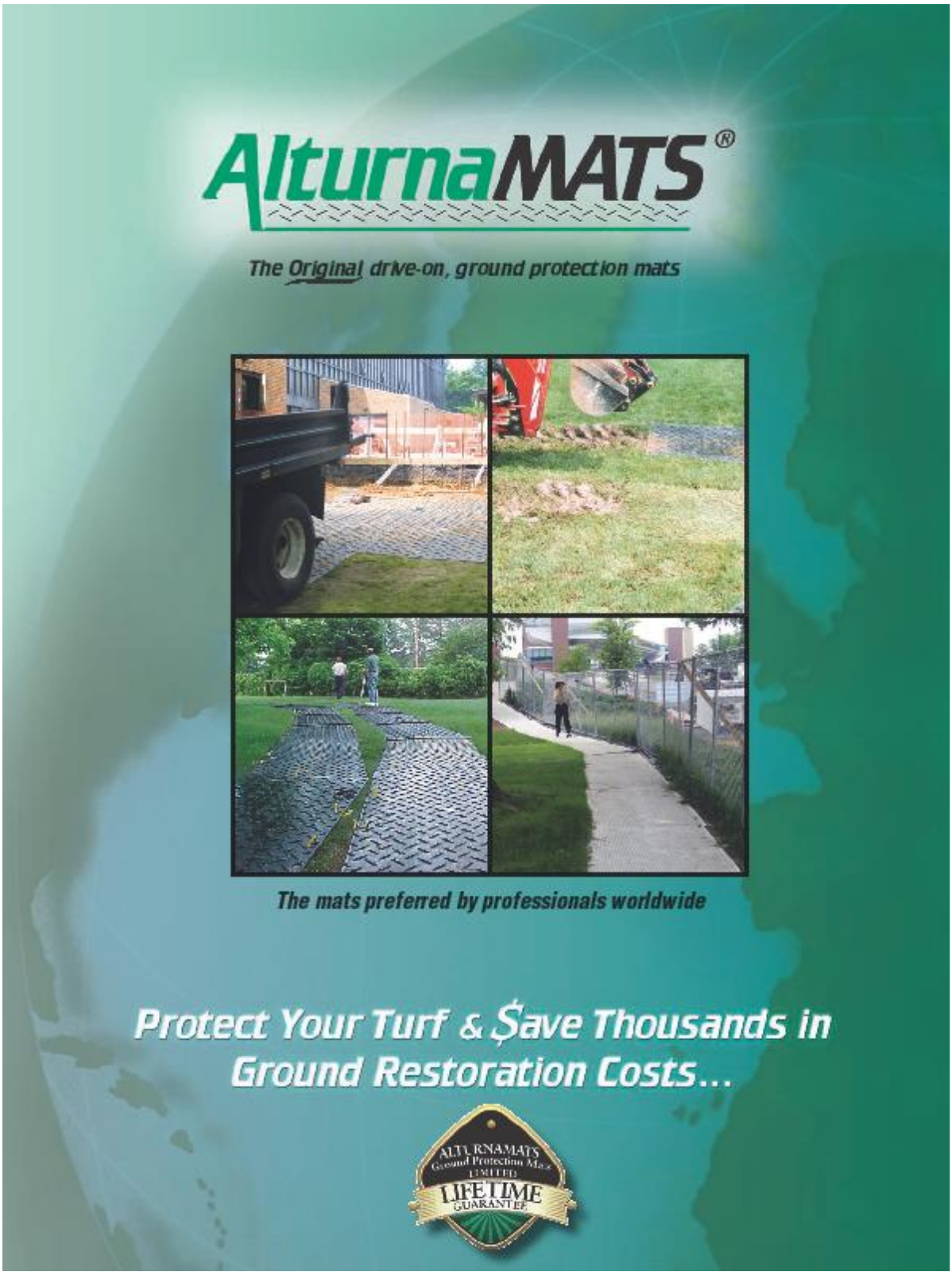

Revised
5/2/2019

Capital Outlay & Facilities
PO Box 9414
VSU, VA 23806
Phone: (804)-504-7500
Fax: (804)-524-5383

AlturnaMATS®

World's Toughest Ground Protection Mat

AlturnaMATS *Built Tough!*

The Original Ground Protection Mats Featuring Maximum Traction Diamond Plate Tread Design

These rugged mats are made of 1/2" thick polyethylene so they are virtually indestructible. They withstand vehicles weighing up to 60 tons, bend but do not break and feature a Limited Lifetime Warranty. AlturnaMATS have been tested in record cold and heat. AlturnaMATS are an environmentally friendly mat as they are made from recycled plastic materials.

With AlturnaMATS, getting stuck is virtually eliminated. They are available smooth on one side or smooth on both sides, ideal for removing dirt or gravel.

- Easily supports 60 ton vehicles
- Rugged 1/2" thick polyethylene
- Bold cleat design for great traction
- Build a roadway or working platform in minutes
- Leave turf smooth, even in soft conditions
- No more splintered, warped, water logged plywood
- Simply hosing down leaves the mats clean
- Available in both black or white mats
- Mats can be locked together with Turn-A-Links forming a continuous roadway
- Limited Lifetime Warranty

Sizes to meet your needs

Black	White	Weight
4' x 8'	4' x 8'	86 lbs.
3' x 8'	3' x 8'	64.5 lbs.
3' x 6'	3' x 6'	51 lbs.
2' x 8'	2' x 8'	43 lbs.
2' x 6'	2' x 6'	32.25 lbs.
2' x 4'	2' x 4'	21.5 lbs.

Revised
5/2/2019

Capital Outlay & Facilities
PO Box 9414
VSU, VA 23806
Phone: (804)-504-7500
Fax: (804)-524-5383

VersaMATS

Most Versatile Mats in the Industry

VersaMATS

Easy to Walk On - Safe to Work On - Great to Drive On
Featuring an Exclusive Slip-Resistant Tread Design

VersaMATS literally are the most versatile ground protection mats in the industry. The flat, slip-resistant tread permits pedestrians to walk safely on the mats, yet they are as rugged as the original AlturnaMATS. The reverse side has the same diamond plate tread as AlturnaMATS, providing great traction for vehicles.

VersaMATS are also available in white, making them ideal for safe use as long walkways even in darkened conditions. They are also available smooth on one side.

- Leaves turf smooth even in soft soil conditions
- Tough 1/2" thick polyethylene
- Two practical cleat designs… for walking and vehicle traffic
- Withstand 60-ton loads
- Build a temporary roadway or walkway in minutes
- Lock together with Turn-A-Links
- Limited Lifetime Warranty

Sizes to meet your needs

Black	White	Weight
4' x 8'	4' x 8'	86 lbs.
3' x 8'	3' x 8'	64.5 lbs.
2' x 8'	2' x 8'	43 lbs.

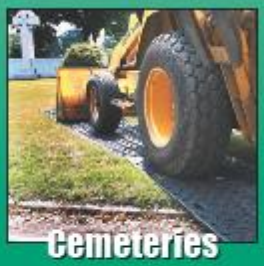

Revised
5/2/2019

Capital Outlay & Facilities
PO Box 9414
VSU, VA 23806
Phone: (804)-504-7500
Fax: (804)-524-5383

Revised
5/2/2019

Capital Outlay & Facilities
PO Box 9414
VSU, VA 23806
Phone: (804)-504-7500
Fax: (804)-524-5383

AlturnaMATS Accessories

Turn-A-Links

Single Turn-A-Link

Double Turn-A-Link

Galvanized Turn-A-Link: Single or Double

Steel links lock mats together to form a semi-permanent, yet portable, continuous roadway, walkway or working platform.

The same steel material, but with a galvanized coating: easier to locate & harder to rust.

		Item #	Ship Wt.
Round Links	Single	RTL-S-G	8 oz.
	Double	RTL-G-G	20 oz.
Flat Links	Single	FTL-S-G	8 oz.
	Double	FLT-D-G	20 oz.
EZ Links	Single	EZL-S	4 oz.
	Double	EZL-D	6 oz.

Handi-Hooks

*Alturna*MATS' Handi-Hooks make moving mats easier, even in wet areas. Made of steel rod, painted white.

Length	Weight
3' (91.44 cm)	2.5 lbs. (1.13 kg)

E-Z Link System

E-Z Links are a quick & convenient linking system for the *Alturna*MATS VersaMATS. The links are available in single or double, & are suitable for pedestrian applications as well as movement of light, compact equipment (less than 12,000 GVW) when on stable ground conditions.

Single E-Z Link

MAT-PAK

This complete package is the handy way to transport and store your *Alturna*MATS.

Consists of:

12 Mats (4' x 8' or 3' x 8')
1 Metal storage, skid rack
20 Single Turn-A-Links
2 Handi-Hooks
2 Ratchet Straps

MAT-PAK	Item No.	Weight
Original Diamond Plate		
Black - 4' x 8' Package	AMCP4	1126 lbs.
Black - 3' x 8' Package	AMCP3	868 lbs.
White - 4' x 8' Package	WMCP4	1126 lbs.
White - 3' x 8' Package	WMCP3	868 lbs.
VersaMATS		
Black - 4' x 8' Package	VMCP4	1126 lbs.
Black - 3' x 8' Package	VMCP3	868 lbs.
White - 4' x 8' Package	WVCP4	1126 lbs.
White - 3' x 8' Package	WVCP3	868 lbs.

AlturnaMATS®

Phone: 888-544-6287 • Fax: 814-827-2903 • E-mail: sales@alturnamats.com

www.alturnamats.com

AHA - 408

Revised
5/2/2019

Capital Outlay & Facilities
PO Box 9414
VSU, VA 23806
Phone: (804)-504-7500
Fax: (804)-524-5383

AlturnaMATS®

ALTURNAMATS Ground Protection Mats LIMITED LIFETIME GUARANTEE

"AlturnaMATS, Your Single Source for Professional Ground Protection Mats."

AlturnaMATS & VersaMATS each leave turf smooth, even under heavy vehicle traffic. No costly turf repair bills and you'll Never Get Stuck Again.

AlturnaMATS, Inc. markets two different ground mats described in this brochure...

- **AlturnaMATS:** Featuring a bold diamond plate tread for maximum traction.
- **VersaMATS:** Featuring a flat, slip-resistant tread on one side designed for pedestrian traffic, and the bold diamond plate tread on the other side for vehicle traffic.

These mats virtually eliminate damage to lawns and landscaped areas throughout the world...from North America, Asia, Australia, Europe, to even Antarctica. These rugged mats are the popular choice among professionals. They are easy to use, lock into place to form a continuous, solid roadway or work platform and they last for years. They are unequalled for quality and performance under the most hazardous conditions.

Each mat can be used in a broad variety of applications such as construction, golf courses, utilities, landscaping, tree care, cemeteries, drilling, sewage...wherever saving the costs of ground restoration is a factor. And they are great to save heavy vehicles from getting stuck in mud.

AlturnaMATS and VersaMATS provide locking links designed of steel to fit into holes on each end of the mats, locking them end-to-end to create a continuous roadway, or you can easily create a large platform for working vehicles.

Don't Get Stuck in a Rut

Now there is no reason to create ruts such as shown here after a stumper traversed this front lawn. The owner had the ruts repaired at a cost of $1,800 and needless to say, never used the tree removal company again.

www.alturnamats.com

Capital Outlay & Facilities
PO Box 9414
VSU, VA 23806
Phone: (804)-504-7500
Fax: (804)-524-5383

APPENDIX J

RECORD OF LAND DISTURBING ACTIVITIES

Revised
5/2/2019

Capital Outlay & Facilities
PO Box 9414
VSU, VA 23806
Phone: (804)-504-7500
Fax: (804)-524-5383

07/01/17-06/30/18 Planned and Ongoing Land Disturbing Activities

Project Name	Project Location	Project Description	Estimated Disturbed Area Acreage	Approximate Start Date	Approximate Completion Date	On-site Project Manager Name	On-site Project Manager Contact Information	Responsible Land Disturber Permit Number	Operator Name	VAR10 Registration Number
Drainage Improvements/ Stormwater Master Plan	VSU Campus	Install drainage improvements and water quality improvements proposed in the Stormwater Master Plan and related to the implementation of the Campus Master Plan 20/20 Vision	276.7	7/1/2014	6/30/2019, with renewal anticipated	As noted by project below	As noted below by project	As noted by project below	Virginia State University	VAR10-9268
Puryear Hall	Puryear Hall	Demolish Puryear Hall	1.30	1/1/2017	4/24/2018	Jonathan Taylor	804) 504-7500	RLD02340 Ronald Feather	Virginia State University	VAR10-9268
Band Practice Field	Formerly Puryear Hall	Install a band practice facility	1.30	8/31/2017	4/24/2018	Jonathan Taylor	804) 504-7500	RLD03468 Jimmy Burgess	Virginia State University	VAR10-9268
Heating Plant Site Stair and Drainage Repairs	Heating Plan	Forced sanitary sewer and road repairs	1.08	4/1/2017	4/24/2018	Jonathan Taylor	(804) 504-7500	Cert# 25314 Brian Dickerson	Virginia State University	VAR10-9268
Moore Hall	Moore Hall	Moore Hall Site Work	0.74	3/30/2017	5/17/17 3/8/2018*	Jonathan Taylor	804) 504-7500	RLC03468 Jimmy Burgess	Virginia State University	VAR10-9268

*Final Inspection

Revised 5/2/2019