HRRSA
www.hrrsa.org

P. O. Box 8
856 North River Road
Mt. Crawford, VA 22841
PH(540) 434-1053 . FX(540) 434-5160

MEMBERS
Bridgewater . Dayton . Harrisonburg
Mt. Crawford . Rockingham County

February 18, 2020

Ms. Christina M. Wood
Biosolids Guidance and Regulation Coordinator
Virginia Department of Environmental Quality
P.O. Box 1105
Richmond, VA 23218

Re: Harrisonburg-Rockingham Regional Sewer Authority (HRRSA), VPA Permit Application for Distribution and Marketing of Class A EQ Biosolids at North River Wastewater Treatment Facility (VA0060640)

Dear Ms. Wood:

Enclosed is HRRSA's VPA permit application to allow the distribution and marketing of thermally dried Class A EQ Biosolids at our North River Wastewater Treatment Facility. The required permit application fee of $5,000 has been sent to DEQ's Department of Receipts Control under separate cover.

Please contact me at sfoley@hrrsa.org if you have any questions or require additional information.

Sincerely,

Sharon G. Foley, P.E.
Executive Director

Enclosure

HRRSA - File

Virginia Pollution Abatement Permit Application for Distribution and Marketing of EQ Biosolids

for the

Harrisonburg-Rockingham Regional Sewer Authority

North River Wastewater Treatment Facility
VPDES Permit No. VA0060640

February 2020

Prepared by

MATERIAL MATTERS, Inc.

TABLE OF CONTENTS

Permit Fee Form 1
VPA Permit Application Form A 5
VPA Permit Application Form D-II, Land Application of Biosolids 9
VPA Permit Application Form D-IV, Biosolids Characterization 14
VPA Permit Application Form D-V, Non-Hazardous Waste Declaration 17
Public Notice Billing Authorization Form 18

Narrative

Compliance Review of Existing Permits 19
Biosolids Treatment Process 19
Background 19
Treatment Process 19
Odor Control Plan 22
Biosolids Storage 22
Biosolids Distribution 23
Biosolids Pollutant Quality 23
Description of Biosolids Pollutant Quality 23
Pathogen Reduction and Vector Attraction Reduction Treatment Processes 24
Pathogen Reduction 24
Fecal Coliform Testing 24
Percent Total Solids Testing 24
Temperature Testing 25
Vector Attraction Reduction 25

Appendices
Appendix 1 – General Location Map
Appendix 2 – Odor Control Plan
Appendix 3 – Biosolids Analytical Data
Table 1. EQ Biosolids Demonstration Period Monitoring Schedule/Results
Table 2. EQ Biosolids Demonstration Period Metals/Nutrients Results
Table 3. EQ Biosolids Demonstration Period Organic Compound Results
Appendix 4 – Dryer Start-up Proceedures
Appendix 5 – Biosolids Sampling Plan
Appendix 6 – Proposed EQ Label/Brochure

DEPARTMENT OF ENVIRONMENTAL QUALITY
WATER DIVISION PERMIT APPLICATION FEE FORM

INSTRUCTIONS

Applicants for individual Virginia Pollutant Discharge Elimination System (VPDES), Virginia Pollution Abatement (VPA), Virginia Water Protection (VWP), and Groundwater Withdrawal (GW) permits are required to pay permit application fees, with the exception of farming operations engaged in production for market and permits pertaining to maintenance dredging for federal navigation channels or other Corps of Engineers or Department of the Navy-sponsored dredging projects. Fees are also required for registration for coverage under most general permits (see Fee Schedule, page 4 of this form).

NOTE: This form is NOT appropriate for Virginia Stormwater Management Program (VSMP) Construction General Permit (VAR10) fee payments.

The permit Fee Schedule is included on pages 3-4 of this form, and includes fees for permit issuance, reissuance*, and for permit modification. Except for VWP permits, fees must be paid when applications are submitted. Applicants for VWP permits will be notified by the DEQ of the fee due. Applications will be considered incomplete if the proper fee is not paid and will not be processed until the fee is received.

* Note: the reissuance fee does not apply to individual VPDES and VPA permits - see the fee schedule for details.

Once you have determined the fee for the type of application you are submitting, complete this form. The form and your check or money order payable to "Treasurer of Virginia" should be mailed to:

Department of Environmental Quality
Receipts Control
P.O. Box 1104
Richmond, VA 23218

You should retain a copy of the form and your check for your records. Please direct any questions regarding this form or fee payment to the DEQ Office to which you are submitting your application.

APPLICANT NAME: Harrisonburg-Rockingham Regional Sewer Authority

ADDRESS: P.O. Box 8
856 North River Road
Mt. Crawford, VA 22841

DAYTIME PHONE: (540)434-1053 Area Code ext. 223

IRS EMPLOYER IDENTIFICATION NUMBER (EIN): 54-0897932 [*aka* Federal Tax Identification Number (FIN)]

FACILITY/ACTIVITY NAME: North River Wastewater Treatment Facility

LOCATION: 856 North River Road, Mount Crawford, VA 22841

TYPE OF PERMIT APPLIED FOR: (from Fee Schedule) VPA Municipal Biosolids Operation

TYPE OF ACTION: ☒ New Issuance ☐ Reissuance ☐ Modification

AMOUNT OF FEE SUBMITTED (from Fee Schedule): $ 5,000

EXISTING PERMIT NUMBER (if applicable):

DEQ OFFICE TO WHICH APPLICATION OR REGISTRATION SUBMITTED (check one)

☐ Abingdon/SWRO ☐ Harrisonburg/VRO ☐ Woodbridge/NRO ☐ Glen Allen/PRO
☐ Richmond/Headquarters ☐ Roanoke/BRRO ☐ Virginia Beach/TRO

FOR DEQ USE ONLY
Date: **DC#:**

[Page Left Blank]

FEE SCHEDULES

A. VPDES and VPA Individual Permits. Applications for issuance of new individual VPDES or VPA permits, and for permittee-initiated major modifications that become effective before the stated permit expiration date. (Flows listed are facility "design" flows. Land application rates listed are facility "design" rates.) [NOTE: VPDES and VPA permittees pay an Annual Permit Maintenance Fee (APMF) instead of a reapplication fee for reissuance, and the APMF is invoiced separately by DEQ.]

TYPE OF INDIVIDUAL PERMIT	ISSUANCE	MODIFICATION	LAND APP MOD
VPDES Industrial Major	$24,000	$12,000	
VPDES Municipal Major	$21,300	$10,650	$1,000[1]
VPDES Industrial Minor / No Standard Limits	$10,200	$5,100	
VPDES Industrial Minor / Standard Limits	$3,300	$3,300	
VPDES Industrial Stormwater	$7,200	$3,600	
VPDES Municipal Stormwater MS4 Individual (Large and Medium)	$16,000	$5,000	
VPDES Municipal Stormwater MS4 Individual (Small)	$8,000	$2,500	
VPDES Municipal Minor / Greater Than 100,000 GPD	$7,500	$3,750	$1,000[1]
VPDES Municipal Minor / 10,001 GPD - 100,000 GPD	$6,000	$3,000	$1,000[1]
VPDES Municipal Minor / 1,001 GPD - 10,000 GPD	$5,400	$2,700	$1,000[1]
VPDES Municipal Minor / 1,000 GPD or Less	$2,000	$1,000	
VPDES Municipal that includes authorization for land application, distribution, or marketing of biosolids or land disposal of sewage sludge	$5,000 [1]	$1,000[1]	$1,000[1]
VPA Industrial Wastewater Operation / Land Application of 10 or More Inches Per Year	$15,000	$7,500	
VPA Industrial Wastewater Operation / Land Application of Less Than 10 Inches Per Year	$10,500	$5,250	
VPA Industrial Sludge Operation	$7,500	$3,750[2]	
VPA Municipal Wastewater Operation	$13,500	$6,750	
VPA Municipal Biosolids Operation	$5,000	$1,000[3]	
VPA Combined Sludge Operation - Mun. Biosolids & Ind. Sludges (except WTP residuals)	$7,500	$3,750[2]	
All other VPA operations not specified above	$750	$375	

[1] To be paid in addition to any required VPDES issuance or modification fee. The modification fee shall apply for any addition of land application sites to a permit.
[2] The modification fee shall apply to any addition of land application sites to a permit.
[3] When adding any industrial source (excluding water treatment plant residuals) to a permit that only authorizes the land application of municipal biosolids, the modification fee for a VPA combined sludge operation shall apply.

B. Virginia Water Protection (VWP) Individual Permits. Applications for issuance of new individual, and reissuance or major modification of existing individual VWP permits. Only one permit application fee will be assessed per application; for a permit application involving more than one of the operations described below, the governing fee shall be based upon the primary purpose of the proposed activity. (Withdrawal amounts shown are maximum daily withdrawals.)

TYPE OF INDIVIDUAL PERMIT	ISSUANCE/REISSUANCE	MODIFICATION
VWP Individual / Surface Water Impacts (Wetlands, Streams and/or Open Water)	$2,400 plus $220 for each 4,356 sq. ft. (1/10 acre) (or portion thereof) of incremental impact over 87,120 sq. ft. (two acres) ($60,000 maximum)	$1,200 plus $110 for each 4,356 sq. ft. (1/10 acre) (or portion thereof) of incremental impact over 87,120 sq. ft. (two acres) ($30,000 maximum)
VWP Individual / Nonmetallic Mineral Mining	$2,400 plus $220 for each 4,356 sq. ft. (1/10 acre) (or portion thereof) of incremental impact over 87,120 sq. ft. (two acres) ($7,500 maximum)	$1,200 plus $110 for each 4,356 sq. ft. (1/10 acre) (or portion thereof) of incremental impact over 87,120 sq. ft. (two acres) ($3,750 maximum)
VWP Individual/Minimum Instream Flow – Surface Water Withdrawals equal to or greater than 3,000,000 gallons on any day	$25,000	$5,000
VWP Individual / Minimum Instream Flow – Surface Water Withdrawals between 2,000,000 and 2,999,999 gallons on any day	$20,000	$5,000
VWP Individual / Minimum Instream Flow – Surface Water Withdrawals between 1,000,000 and 1,999,999 gallons on any day	$15,000	$5,000
VWP Individual / Minimum Instream Flow – Surface Water Withdrawals < 1,000,000 gallons on any day that do not otherwise qualify for a general VWP permit for water withdrawals	$10,000	$5,000
VWP Individual / Reservoir – Major (any new or expanded reservoir with greater than or equal to 17 acres of total surface water impacts (stream and wetlands), or a water	$35,000	$12,500

TYPE OF INDIVIDUAL PERMIT	ISSUANCE/REISSUANCE	MODIFICATION
withdrawal of greater than or equal to 3,000,000 gallons in any one day)		
VWP Individual / Reservoir – Minor (any new or expanded reservoir with less than 17 acres of total surface water impacts (stream and wetlands), or a water withdrawal of less than 3,000,000 gallons in any one day)	$25,000	$12,500

C. Groundwater Withdrawal (GW) Individual Permits. Applications for issuance of new individual, and reissuance or major modification of existing individual GW permits.

TYPE OF INDIVIDUAL PERMIT	ISSUANCE/REISSUANCE	MODIFICATION
Groundwater Withdrawal / Initial Permit for an Existing Withdrawal Based Solely on Historic Withdrawals	$1,200	$600
Groundwater Withdrawal – effective through 12/31/2018	$6,000	$3,000
Groundwater Withdrawal – effective 1/1/2019	$9,000	$3,000

D. Registration Statements (VPDES and VPA permits) or Applications (VWP permits) for General Permit Coverage.

TYPE OF GENERAL PERMIT	ISSUANCE
VPDES General Permit for Domestic Sewage Discharges Less Than or Equal to 1,000 GPD (VAG40)	Zero ($0)
VPDES General Permit for Discharges from Petroleum Contaminated Sites, Groundwater Remediation & Hydrostatic Tests (VAG83)	Zero ($0)
VPDES General Permit for Discharges Resulting from the Application of Pesticides to Surface Waters of Virginia (VAG87)	Zero ($0)
VPDES General Permit for Storm Water Discharges Associated with Industrial Activity (VAR05)	$500
VPA General Permit for Pollutant Management Activities for Animal Feeding Operations and Animal Waste Management (VPG1)	Zero ($0)
VPA General Permit for Poultry Waste Management (VPG2)	Zero ($0)
VPDES General Permit for Concrete Product Facilities (VAG11)	$600
VPDES General Permit for Noncontact Cooling Water Discharges of 50,000 GPD or Less (VAG25)	$600
VPDES General Permit for Seafood Processing Facilities (VAG52)	$600
VPDES General Permit for Potable Water Treatment Plants (VAG64)	$600
VPDES General Permit for Vehicle Wash Facilities and Laundry Facilities (VAG75)	$600
VPDES General Permit for Nonmetallic Mineral Mining (VAG84)	$600
VPDES General Permit for Total Nitrogen and Total Phosphorus Discharges and Nutrient Trading in the Chesapeake Watershed in Virginia (VAN)	$600
VPDES General Permit for Municipal Separate Storm Sewer Systems (MS4) – Small (VAR04)	$4000
VWP General / Less Than 4,356 sq. ft. (1/10 acre) of Surface Water Impact (Wetlands, Streams and/or Open Water)	$0
VWP General / 4,356 sq. ft. to 21,780 sq. ft. (1/10 acre to 1/2 acre) of Surface Water Impact (Wetlands, Streams and/or Open Water)	$600
VWP General / 21,781 sq. ft. to 43,560 sq. ft. (greater than 1/2 acre to one acre) of Surface Water Impact (Wetlands, Streams and/or Open Water)	$1,200
VWP General / 43,561 sq. ft. to 87,120 sq. ft. (greater than one acre to two acres) of Surface Water Impact (Wetlands, Streams and/or Open Water)	$1,200 plus $120 for each 4,356 sq. ft. (1/10 acre) (or portion thereof) of incremental impact over 43,560 sq. ft. (one acre) ($2,400 maximum)
VWP General / Minimum Instream Flow / Reservoir - Water withdrawals and/or pond construction	$2,400

NOTE: ***This form is NOT appropriate for Virginia Stormwater Management Program (VSMP) Construction General Permit (VAR10) fee payments.*** Please refer to the following web site hyperlink to obtain appropriate VAR10 permit fee forms:

Hyperlink to the DEQ Virginia Stormwater Management, Construction Stormwater Permit Program website.

VIRGINIA POLLUTION ABATEMENT (VPA)
PERMIT APPLICATION

FORM A – GENERAL INFORMATION

Department of Environmental Quality

Rev. 06-2014

Department of Environmental Quality

VIRGINIA POLLUTION ABATEMENT PERMIT APPLICATION

FORM A – GENERAL INFORMATION

INSTRUCTIONS

All applications submitted for a Virginia Pollution Abatement (VPA) Permit shall include this form.

1. **FACILITY OR APPLICANT INFORMATION**:
   a. If applying for a permit which will authorize management of pollutants at a facility, including but not limited to a wastewater treatment plant, sludge treatment facility, routine storage facility (not located at the treatment plant), or an Animal Feeding Operation (AFO), provide the following information:
      - Facility Name: The legal name of the facility managing the pollutants,
      - City/County: The city or county in which the facility is located,
      - Physical Location/Address: The physical location or address of the facility, and
      - Mailing Address: The mailing address of the facility. If the same as physical address write SAME.

   b. If applying for a permit to authorize land application activities only, where no facility is included, provide the following information:
      - Applicant Name: The name of the applicant,
      - City/County: The city or county in which the land application is proposed,
      - Physical Location/Address: The physical address of the office which will manage the activities, and
      - Mailing Address: The mailing address of the office which will manage the activities. If the same as physical address write SAME.

2. **OWNER INFORMATION**: Provide the legal name, mailing address, telephone number and e-mail address of the owner or the company making application for the VPA Permit.

3. **OWNER CONTACT INFORMATION**: Provide the name, title, mailing address, telephone number and e-mail address of the individual whom DEQ staff should contact regarding this application. If the owner contact is the same as the owner, write SAME.

4. **EXISTING PERMITS**: List all environmentally-related permits issued to the facility by listing the issuing agency and permit number. Include an existing VPA permit if your facility has one.

5. **NATURE OF BUSINESS**: Provide a general statement of the type of business conducted at the facility. Industrial facilities are requested to provide applicable Standard Industrial Classification (SIC) Codes. SIC Codes may be obtained from Standard Industrial Classification Manual published by the U.S. Department of Labor, Occupational Safety and Health Administration. The manual can be found in public libraries and on the internet.

6. **TYPE OF POLLUTANT MANAGEMENT ACTIVITY**: Indicate pollutants or type of waste(s) handled and whether the facilities are either existing or proposed, or both. Note that the pollutant or type of waste determines which other VPA application forms must be completed. Applicants may also contact the DEQ for assistance.

7. **GENERAL LOCATION MAP**: The purpose of the map is to allow the DEQ staff to readily find the establishment. This map is to show the general location of the establishment. Applicants should use county or United States Geological Survey quadrangle maps. DEQ Regional Offices can provide information for obtaining such maps.

8. **CONSENT TO RECEIVE AND CERTIFY RECEIPT OF ELECTRONIC MAIL**: The Department of Environmental Quality (DEQ) may deliver permits, certifications and plan approvals to recipients, including applicants or permittees, by electronically certified mail where the recipients notify DEQ of their consent to receive mail electronically (§ 10.1-1183). Check only one of the options.

9. **SIGNATURE AND CERTIFICATION STATEMENT:** The application must be signed in accordance with the VPA Permit Regulation (9VAC25-32):
   a. **FOR A CORPORATION**: by a responsible corporate official. For purposes of this section, a responsible corporate official means (I) a president, secretary, treasurer, or vice-president of the corporation in charge of a principal business function, or any other person who performs similar policy or decision making functions for the corporation, or (2) the manager of one or more manufacturing, production, or operating facilities employing more than 250 persons or having gross annual sales or expenditures exceeding $25,000,000 (in second-quarter l980 dollars), if authority to sign documents has been assigned or delegated to the manager in accordance with corporate procedures.
   b. **FOR A MUNICIPALITY, STATE, FEDERAL OR OTHER PUBLIC AGENCY**, by either a principal executive officer or ranking elected official. (A principal executive officer of a Federal, Municipal, or State agency includes the chief executive officer of the agency or head executive officer having responsibility for the overall operation of a principal geographic unit of the agency).
   c. **FOR A PARTNERSHIP OR SOLE PROPRIETORSHIP**, by a general partner or the proprietor, respectively.

VIRGINIA POLLUTION ABATEMENT PERMIT APPLICATION
FORM A
ALL APPLICANTS

1. FACILITY OR APPLICANT INFORMATION

Facility Name or Applicant Name:	North River Wastewater Treatment Facility
County/City:	Rockingham County
Physical Location/ Address:	856 North River Road, Mount Crawford, VA 22841
Mailing Address:	P.O. Box 8, Mount Crawford, VA 22841

2. OWNER INFORMATION

Owner Legal Name:	Harrisonburg-Rockingham Regional Sewer Authority
Mailing Address:	P.O. Box 8, Mount Crawford, VA 22841
Telephone Number:	(540) 434-1053 ext. 223
Email address:	sfoley@hrrsa.org

3. OWNER CONTACT INFORMATION

Owner Contact Name:	Sharon G. Foley, P.E.
Title:	Executive Director
Mailing Address:	P.O. Box 8, Mount Crawford, VA 22841
Telephone Number:	(540) 434-1053 ext. 223
Email address:	sfoley@hrrsa.org

4. EXISTING PERMITS: (e.g., VPA, VPDES; VWP, RCRA; UIC; other)

Agency	Permit Type	Permit Number
VDEQ	VPDES Wastewater	VA0060640
VDEQ	VPDES Nutrient GP	VAN010042
VDEQ	VPDES Stormwater GP	VAR52036
VDEQ	Air Permit	Reg. No. 81709

5. NATURE OF BUSINESS: Municipal wastewater treatment

SIC Code(s):	4952		

VIRGINIA POLLUTION ABATEMENT PERMIT APPLICATION
FORM A
ALL APPLICANTS

6. TYPE OF POLLUTANT MANAGEMENT ACTIVITY: *check the appropriate box(es)*

	Proposed	Existing
Animal Feeding Operations (complete Form B)	☐	☐
Industrial Waste (complete Form C & Form D: Parts D-V & D-VI)	☐	☐
Land Application of Municipal Effluent (complete Form D: Parts D-I & D-III)	☐	☐
Land Application of Biosolids/Sewage Sludge (complete Form D: Parts D-II, D-IV, D-V & D-VI; and Liability Requirements for Transport, Storage and Land Application of Biosolids Form) ***Distribution and Marketing of EQ Biosolids***	☒	☐
Reclamation and/or Distribution of Reclaimed Wastewater (Application Addendum)	☐	☐

7. GENERAL LOCATION MAP:

Provide a general location map which clearly identifies the location of the facility. ***See Appendix 1***

8. CONSENT TO RECEIVE AND CERTIFY RECEIPT OF ELECTRONIC MAIL:

The Department of Environmental Quality (DEQ) may deliver permits, certifications and plan approvals to recipients, including applicants or permittees, by electronically certified mail where the recipients notify DEQ of their consent to receive mail electronically (§ 10.1-1183). Check only one of the following to consent to or decline receipt of electronic mail from DEQ as follows:

☒ Applicant or permittee agrees to receive by electronic mail the permit and any plan approvals associated with the permit that may be issued for the proposed pollutant management activity, and to certify receipt of such electronic mail when requested by the DEQ.

☐ Applicant or permittee declines to receive by electronic mail the permit and any plan approvals associated with the permit that may be issued for the proposed pollutant management activity.

9. SIGNATURE AND CERTIFICATION STATEMENT:

I certify under penalty of law that this document and all attachments were prepared under my direction or supervision in accordance with a system designed to assure that qualified personnel properly gather and evaluate the information submitted. Based on my inquiry of the person or persons who manage the system or those persons directly responsible for gathering information, the information submitted is to the best of my knowledge and belief true, accurate and complete. I am aware that there are significant penalties for submitting false information including the possibility of fine and imprisonment for knowing violations. I further certify that I am an authorized signatory as specified in the VPA Permit Regulation (9VAC25-32).

Signature:	Sharon G Foley	Date:	2-12-2020
Printed Name:	Sharon G. Foley, P.E.		
Title:	Executive Director		

VIRGINIA POLLUTION ABATEMENT APPLICATION

FORM D

MUNICIPAL EFFLUENT AND BIOSOLIDS

PART D-II LAND APPLICATION OF BIOSOLIDS

All of the information provided in this application will become part of the Biosolids Management Plan associated with a VPA individual permit issued for the proposed activity.

General Information

1. Owner Legal name. (Provide the same name given on Form A, Item 2). ***Harrisonburg-Rockingham Regional Sewer Authority***

2. Provide a general description of the proposed operation.
   a. **Source List:** Provide a list of the facilities that generate the biosolids that you currently land apply or propose to land apply. If the facility has multiple wastestreams that receive different treatment types; identify the biosolids produced by each treatment process as a separate source from the generating facility. Include all sources that you wish to be included in this permit. proposed only sources that are identified as approved on the DEQ Sources list. (A source of biosolids at the generating facility is the product of a specific series of treatment unit processes, and a single facility may have multiple sources. For example, a generator that splits its waste activated sludge, half to a digester and a belt press and the other half to lime stabilization has 2 sources of biosolids). Include the following information using the Form D VPA Permit Application Workbook Tab **D II.2.a. Source List** ***See Attached Narrative for Additional Information***
      1) Generating Facility's name (as it is identified on the DEQ Sources List) ***North River Wastewater Treatment Facility***
      2) Generating Facility's discharge permit number VPDES, NPDES or other state permit; ***VA0060640***
      3) Biosolids Treatment Type; ***Mesophilic anaerobic digestion with thermal drying***
      4) Biosolids Quality (EQ Cake biosolids; Class A CPLR biosolids; Class B PC biosolids; Class B CPLR biosolids) ***Class A/EQ Dried Biosolids***
      5) Generating Facility's Owner; ***Harrisonburg-Rockingham Regional Sewer Authority***
      6) Generating Facility's location –***856 North River Road, Mount Crawford, VA 22841***
      7) Annual Amount of Sludge/Biosolids Produced – ***2,341 DMT***
      8) Annual Amount Biosolids Land Applied ***1,766 DMT land applied in 2019; Propose beneficial use of 100% of Class A/EQ dried biosolids***
      9) Approval Date ***TBD***

   b. Provide each generating facility's odor control plan for the sources identified above, if a current odor control plan has not been submitted to DEQ. The odor control plan shall contain at minimum: ***See Appendix 2***
      1) Methods used to minimize odor in producing biosolids;
      2) Methods used to identify malodorous biosolids before delivery to the land applier (at the generating facility);
      3) Methods used to identify and abate malodorous biosolids if delivered to the field, prior to land application; and
      4) Methods used to abate malodor from biosolids if land applied;

   c. Provide an updated Non-Hazardous Declaration Statement - Part D-V for each biosolids source from the approved source list. ***See Form D-V, Non-Hazardous Waste Declaration Form, Attached.***

   d. General location: Describe the general location of the sites proposed for application, and ***See Attached Narrative***

   e. Methods of biosolids application proposed. ***See Attached Narrative***

3. Identify the methods for notification of DEQ and local government prior to proposed land application activities.
Not Applicable

4. Provide to the DEQ and to each locality in which the biosolids are to be applied, written evidence of financial responsibility. Evidence of financial responsibility shall be provided in accordance with the requirements specified under 9VAC25-32-770 et seq.
Not Applicable

Design Information

Biosolids Characterization

6. For each new source of biosolids proposed for land application provide:

a. Part D-IV, a Biosolids Characteristics Form for each source of biosolids that is not identified on the VA DEQ Approved Biosolids Source List. ***See Form D-IV, Biosolids Characteristics Form, Attached.*** The following biosolids sources will always require a characterization form:
   1) biosolids from a new generating facility;
   2) biosolids from an existing generator that has never been approved for land application in Virginia;
   3) biosolids previously approved for which the generator has not submitted biosolids monitoring data in the past 5 years; or
   4) biosolids produced by a new treatment process within an existing facility.

b. Part D-V - Non-Hazardous Declaration Statement. ***See Form D-V, Non-Hazardous Waste Declaration Form, Attached.***

Biosolids Storage ***See Attached Narrative***

7. List in a tabular format, using Form D VPA Permit Application Workbook **Tab D II.7. Storage**, all existing and proposed **routine** biosolids storage facilities and **on-site** storage under the control of the permit applicant. Provide the permit name and number associated with the storage facility or site. Include for each, the storage facility or site name, the location, total storage capacity, current available capacity and the biosolids contracts currently permitted or assigned to these facilities or sites.

8. Provide plans and specifications for proposed **routine** and **on-site** storage facilities that depict the following information: ***Not Applicable***

a. Site layout on a recent 7.5 minute topographic quadrangle or other appropriate scaled map with the following information:
   1) Location of any required soil, geologic and hydrologic test holes or borings
   2) Location of the following field features within 0.25 miles of the site boundary (indicated on the map) with the approximate distances from the site boundary.
      (a) Water wells (operating or abandoned).
      (b) Surface waters.
      (c) Springs.
      (d) Public water supplies.
      (e) Sinkholes.
      (f) Underground and/or surface mines.
      (g) Mine pool (or other) surface water discharge points.
      (h) Mining spoil piles and mine dumps.
      (i) Quarries.
      (j) Sand and gravel pits.
      (k) Gas and oil wells.
      (l) Diversion ditches.
      (m) Occupied dwellings, including industrial and commercial establishments.
      (n) Landfills - dumps.
      (o) Other unlined impoundments.
      (p) Septic tanks and drainfields.

(q) Injection wells.

b. Topographic map (10-foot contour preferred) of sufficient detail to clearly show the following information:
   (1) Maximum and minimum percent slopes.
   (2) Depressions on the site that may collect water.
   (3) Drainage ways that may attribute to rainfall run-on to or runoff from this site.
   (4) Portions of the site (if any) which are located within the 100-year floodplain.
c. Data and specifications for the liner proposed for seepage control.
d. Scaled plan view and cross-sectional view of the storage facilities or sites showing inside and outside slopes of all embankments and details of all appurtenances.
e. Calculations justifying impoundment capacity, including freeboard where applicable.
f. A description of supernatant handling and disposal.
g. Groundwater monitoring plans for the facilities or sites including pertinent hydrogeological data to justify upgradient and downgradient well location and depth.

9. For the routine storage of biosolids, provide evidence of certification by the local government of the locality in which the biosolids are to be stored that the storage site is consistent with all applicable ordinances. Evidence of certification shall consist of the following: ***Not Applicable***

   a. A copy of the certification from the local government confirming that the storage site is consistent with all applicable ordinances, or where the local government fails to respond within 30 days of receiving the request for certification, a copy of the letter from the applicant to the local government requesting certification of the storage facility; **or**
   b. A copy of the special exception or special use permit from the local government that has adopted an ordinance in accordance with § 62.1-44.19:3.R of the Code of Virginia.

Biosolids Transport *(Not Applicable)*

10. Provide a detailed description for each of the following:

    a. Vehicles that will be used to transport biosolids from generators or storage to land application sites;
    b. Routes to be used to transport biosolids from the generator(s) to storage unit(s);
    c. Procedures for biosolids off-loading at the biosolids facilities and the land application site together with spill prevention, cleanup (including vehicle cleaning) and emergency spill notification and cleanup measures; and
    d. Voucher system to be used to document transport and delivery of biosolids from their source to the land application site or a facility to further process the biosolids for marketing. Also describe record retention for vouchers.

Field Operations *(Not Applicable)*

11. For field operations involving storage, provide a detailed description for each of the following:

    a. Routine storage—procedures for biosolids loading of transport vehicles, equipment cleaning, freeboard maintenance for storage of liquid biosolids, and inspections for structural integrity of the storage unit;

    b.. On-site storage—procedures for DEQ approval and implementation; designated site locations if provided in the "Design Information"; the specific site criteria including the best management practices that will be utilized to prevent contact with storm water run on or runoff and the procedures to be followed to ensure the 45 day time limit will be met;

    c. Staging - procedures for DEQ notification; procedures to be followed including either designated site locations provided in the "Design Information" or the specific site criteria for such locations including the liner or cover requirements and the time limit assigned for such use;

    d. Procedures for reestablishment of off-loading and staging areas.

12. Provide a detailed description for each of the following:

    a. The biosolids spreader vehicles and the specifications of each vehicle.

b. Procedures for calibrating each spreader based on the solids content of various biosolids to ensure uniform distribution and appropriate loading rates on a day-to-day basis.
c. Procedures used to ensure that operations address the following constraints:
   (1) Application of biosolids to frozen ground, pasture or hay fields, crops for direct human consumption and saturated or ice/snow covered ground; and
   (2) Establishment of setback distances, slopes, prohibited access for beef and dairy animals, soil pH requirements, and proper site specific biosolids loading rates on a field-by-field basis.

13. Provide a Land Applier Odor Control Plan that includes at a minimum:

    a. Methods used to identify and abate malodorous biosolids in the field prior to land application, and
    b. Methods used to abate malodorous biosolids if land applied.

Land Application Sites *(Not Applicable)*

14. Provide a comprehensive list that includes each field proposed for inclusion in the permit. For each field include the following information using Form D VPA Permit Application Workbook Tab **D II.14.a Permitted Fields** or Tab **D II.14.b New Fields**: *DEQ Control Number; Site Book Name; Field ID in the format as it will be used in monthly reports; gross acres of the field; landowner names, date on landowner agreement(s); Tax parcel ID;* latitude and longitude of each land application site in decimal degrees to three decimal places and the method of determination; the type of site and crops to be grown. For modifications to existing fields, include the change in acreage and a description of the modification to the field.

    Submission of a completed Fields tab in the Form D VPA Permit Application Workbook supersedes the need to complete the Landowner Coordination Form in the Landowner Agreement, VPA Permit Application Form D-VI.

    Site Type includes agricultural land, forest, a public contact site, or a reclamation site, as defined in 9VAC25-32-10.

    Use the **Permitted Fields** tab for reissuance and modifications to existing fields. Use the **New Fields** tab for issuance of new permits and addition of new fields during reissuance and modifications.

    When submitting a permit application for a permit modification, do not include existing permitted fields that are not being modified or removed.

16. Provide a properly completed Land Application Agreement form for each landowner, Part D-VI.
    - *Each landowner must sign his or her own landowner agreement form.*
    - *Provide the name, mailing address, and telephone number of the site owner identified on that form.*
    - *See Part D-VI: Land Application Agreement – Biosolids and Industrial Residuals – Instructions for specific details on completing the form.*

17. Provide a legible topographic map and aerial photograph, including legend, of proposed application areas to scale as needed to depict the following features:

    a. Property boundaries;
    b. Surface watercourses, including drainage ways;
    c. Water supply wells and springs;
    d. Roadways;
    e. Rock outcrops;
    f. Slopes;
    g. Sinkholes
    h. Frequently flooded areas (National Resources Conservation Service (NRCS) designation);
    i. Occupied dwellings within 400 feet of the property boundaries and all existing dwelling and property line setback distances;
    j. Publicly accessible properties and occupied buildings within 400 feet of the property boundaries and the associated extended setback distances; and
    k. The gross acreage of the fields where biosolids will be applied;

18. Provide a county map or other map of sufficient detail to show general location of the site and proposed transport vehicle haul routes to be utilized from the treatment plant or storage facility.

19. Provide county tax maps labeled with Tax Parcel ID(s)] for each farm to be included in the permit, which may include multiple fields to depict properties within 400 feet of the field boundaries.

20. Provide a USDA soil survey map, if available, of proposed sites for land application of biosolids.

21. Provide the name, mailing address, and telephone number of the person who applies biosolids to the site, if different from the applicant.

22. Provide the following information for each land application site that has been identified at the time of permit application, if the applicant intends to apply bulk biosolids subject to the cumulative pollutant loading rates in 9VAC25-32-356 Table 3 to the site:

    a. Whether the applicant has contacted VA DEQ to ascertain whether bulk biosolids subject to 9VAC25-32-356 Table 3 has been applied to the site on or since July 20, 1993, and if so, the name of person contacted; and
    b. Identification of facilities other than the applicant's facility that have sent, or are sending, biosolids subject to the cumulative pollutant loading rates in 9VAC25-32-356 Table 3 to the site since July 20, 1993, if, based on the inquiry in item (a) above, bulk biosolids subject to cumulative pollutant loading rates in 9VAC25-32-356 Table 3 has been applied to the site since July 20, 1993.

23. Provide a nutrient management plan approved by the Department of Conservation and Recreation and a copy of the DCR approval letter for application sites meeting the following conditions:

    a. Sites operated by an owner or lessee of a confined animal feeding operation, as defined in subsection A of § 62.1-44.17:1 of the Code of Virginia, or confined poultry feeding operation, as defined in subsection A of § 62.1-44.17:1.1 of the Code of Virginia;
    b. Sites where land application more frequently than once every three years at greater than 50% of the annual agronomic rate is proposed;
    c. Mined or disturbed land sites where land application is proposed at greater than agronomic rates; or
    d. Other sites based on site-specific conditions that increase the risk that land application may adversely impact state waters.

24. For mined or disturbed sites where land application is proposed at greater than agronomic rates, provide a reclamation plan that establishes the biosolids application rates and other site specific management practices.

VIRGINIA POLLUTION ABATEMENT APPLICATION

FORM D

MUNICIPAL EFFLUENT AND BIOSOLIDS

PART D-IV BIOSOLIDS CHARACTERIZATION FORM

1. Facility Name: **North River Wastewater Treatment Facility**

2. Design Flow: **22 MGD**

3. Annual Sludge/Biosolids Production (Total): **2,341 metric tons (dry weight basis) (2019)**

4. Annual Biosolids Land Applied or Distributed: **1,766 metric tons (dry weight basis) (2019); propose 100% land application/ distribution for future biosolids management. HRRSA has approval to landfill biosolids at the Rockingham County Landfill and have done so during extended periods of inclement weather.**

5. Source Identification (if facility produces multiple sources): _____

6. Pathogen Treatment Classification: ☒ Class A ☐ Class B

7. Indicate Pathogen Reduction Option and provide monitoring and process control data from the most recent 3 months of production:

   Class B:

   ☐ Alternative 1: Fecal coliform testing -geometric mean of 7 samples

   ☐ Alternative 2: Process to Significantly Reduce Pathogens (PSRP) - if selected, indicate process below:

   Process: ☐ anaerobic digestion ☐ aerobic digestion ☐ alkaline stabilization ☐ air drying ☐ composting

   ☐ other ____

   Class A:

   ☐ Alternative 1: Fecal coliform or Salmonella testing and heat treatment at or above 50°C.

   ☐ Alternative 2: Fecal coliform or Salmonella testing and alkaline stabilization at or above 52°C.

   ☐ Alternative 3: Fecal coliform or Salmonella testing and enteric virus and viable helminth ova testing and evaluation when enteric viruses and viable helminth ova prior to pathogen treatment are equal to or greater than 1 Plaque-forming unit or one ova, respectively, per 4 grams total solids.

   ☐ Alternative 4: Fecal coliform or Salmonella testing and enteric virus and viable helminth ova testing.

   ☒ Alternative 5: Process to Further Reduce Pathogens (PFRP) - Fecal coliform or Salmonella testing and process indicated below:

   Process: ☐ composting at 55°C ☒ heat drying at 80°C ☐ heat treatment at 180°C

   ☐ thermophilic aerobic digestion ☐ beta ray irradiation ☐ gamma ray irradiation

   ☐ pasteurization ☐ other _____

8. Indicate Vector Attraction Reduction Option and provide monitoring and process control data from the most recent 3 months of production:

   ☐ ≥ 38% volatile solids reduction ☐ anaerobic 40 day bench test

   ☐ aerobic 30 day bench test ☐ Specific Oxygen Uptake Rate (SOUR) test

   ☐ 14 days aerobically treated at 104° F ☐ alkaline stabilization

   ☒ drying to ≥75% total solids with no primary sludges ☐ drying to ≥90% total solids including primary sludges

(3) Lime treated biosolids (10% or more lime by dry weight) must be analyzed for percent $CaCO_3$.

11. Provide calculations describing the average nutrient value of the biosolids as pounds per dry ton for the following parameters:

Plant Available Nitrogen	Phosphorus (P_2O_5)	Potassium (K_2O)	Calcium Carbonate Equivalence (for lime treated biosolids)
22 lbs/dry ton[1]	**164** lbs/dry ton[2]	**4** lbs/dry ton[3]	**N/A** %

[1]Average value of 12/4 & 12/30 analytical results (11/4 TKN results are outlier)
[2]Total Phosphate – avg value of 11/4, 12/4, and 12/30 results
[3]Total Potash – avg value of 11/4, 12/4, and 12/30 results

12. Provide a representative PCB analysis if results have not been supplied to DEQ.

Polychlorinated biphenols _____ mg/kg

13. For Exceptional Quality Biosolids, provide at least one analysis for each parameter. ***See Appendix 3, Table 3***

Parameter	Biosolids Concentrations(1)
Aldrin/dieldrin (total)	_____ mg/kg
Benzo (a) pyrene	_____ mg/kg
Chlordane	_____ mg/kg
DDT/DDE/DDD (total)(2)	_____ mg/kg
Dimethyl nitrosamine	_____ mg/kg
Heptachlor	_____ mg/kg
Hexachlorobenzene	_____ mg/kg
Hexachlorobutadiene	_____ mg/kg
Lindane	_____ mg/kg
Toxaphene	_____ mg/kg
Trichloroethylene	_____ mg/kg

(1) Values to be reported on a dry weight basis.
(2) Note: DDT = 2,2--Bis (p-chlorophenyl)--1,1,1—Trichloroethane; DDE = 1,1--Bis (p-chlorophenyl)--2,2—Dichloroethylene; DDD = 1,1--Bis (p-chlorophenyl)--2,2--Dichloroethane

14. Provide at least one analysis of any other pollutants which you believe may be present in the biosolids. Upon review, additional analyses may be required by DEQ.

Boron: 30 mg/kg (avg. of 2019 data) _____

_____ _____

15. Based on the amount of biosolids to be land applied or distributed annually, indicate the sampling frequency:

Amount of biosolids(1) (metric tons per 365-day period)	Frequency	Check one:
Greater than zero but less than 290	Once per year	
Equal to or greater than 290 but less than 1,500	Once per quarter (four times per year)	
Equal to or greater than 1,500 but less than 15,000	Once per 60 days (six times per year)	✓
Equal to or greater than 15,000	Per month (12 times per year)	

(1) Either the amount of bulk biosolids applied to the land or the amount of biosolids received by a person who prepares biosolids that is sold or given away in a bag or other container for application to the land (dry weight basis).

☐ no vector attraction reduction at WWTW – 6 hour incorporation into soil or injection into soil

9. Provide a description of the method of sludge treatment or stabilization for each biosolids source, including a flow diagram of each residual treatment train. ***See Attached Narrative***

10. Provide biosolids analytical data for the following parameters from a minimum of 3 samples taken within 4 ½ years prior to the date of the permit application. Samples must be representative of the biosolids to be land applied and taken at least one month apart. Existing data may be used in lieu of sampling done solely for the purpose of this application. For all analyses, provide the documentation from a VELAP certified laboratory that indicates analysis result, analytical method used, and method detection level. ***See Appendix 3, Table 2***

	Average Monthly Concentration(1)		
Parameter	Month/Year(2):	Month/Year(2):	Month/Year(2):
Percent Solids	%	%	%
Volatile Solids	%	%	%
pH	SU	SU	SU
Alkalinity as $CaCO_3$(3)	mg/kg	mg/kg	mg/kg
Nitrogen, (Nitrate)	mg/kg	mg/kg	mg/kg
Nitrogen, (Ammonium)	mg/kg	mg/kg	mg/kg
Nitrogen, (Total Kjeldahl)	mg/kg	mg/kg	mg/kg
Phosphorus, (Total)	mg/kg	mg/kg	mg/kg
Potassium, (Total)	mg/kg	mg/kg	mg/kg
Arsenic	mg/kg	mg/kg	mg/kg
Cadmium	mg/kg	mg/kg	mg/kg
Copper	mg/kg	mg/kg	mg/kg
Lead	mg/kg	mg/kg	mg/kg
Mercury	mg/kg	mg/kg	mg/kg
Molybdenum	mg/kg	mg/kg	mg/kg
Nickel	mg/kg	mg/kg	mg/kg
Selenium	mg/kg	mg/kg	mg/kg
Zinc	mg/kg	mg/kg	mg/kg

(1) Values to be reported on a dry weight basis unless indicated.
(2) If only one sample was analyzed in the month specified, it is not necessary to transpose the values from the attached laboratory sheet to the table above.

VIRGINIA POLLUTION ABATEMENT APPLICATION

FORM D

MUNICIPAL EFFLUENT AND BIOSOLIDS

PART D-V NON-HAZARDOUS WASTE DECLARATION

For waste to be land applied, the owner of the treatment works, as defined by 9 VAC 25-32-10, must sign the following statement:

I certify that the waste from the facility identified below and described in this application is non-hazardous and not regulated under the Resource Conservation and Recovery Act or the Virginia Hazardous Waste Management Regulation (9 VAC 20-60).

Facility Name: North River Wastewater Treatment Facility

VPDES, NPDES or State Permit Number: VA0060640

Sharon B Foley 2·12·2020

(Signature of Owner) (Date)

Sharon G. Foley, P.E.
(Printed Name of Owner)

Executive Director
(Title)

Generator Contact Information

Sharon G. Foley, P.E., Executive Director
(Name and Title)

856 North River Road, P.O. Box 8, Mount Crawford, VA 22841
(Address)

(540) 434-1053 ext. 223
(Phone Number)

sfoley@hrrsa.org
(Email Address)

PUBLIC NOTICE BILLING INFORMATION

I hereby authorize the Department of Environmental Quality to have the cost of publishing a public notice billed to the Agent/Department shown below. The public notice will be published once a week for two consecutive weeks in 1 newspaper of general circulation within each DEQ Region where Harrisonburg Rockingham Regional Sewer Authority proposes to distribute EQ biosolids, in accordance with 9 VAC 25-32-140.A.

Agent/Department to be billed:	
Owner:	Harrisonburg-Rockingham Regional Sewer Authority
Agent/Department Address:	P.O. Box 8
	856 North River Road
	Mount Crawford, VA 22841
Agent's Telephone No.:	(540) 434-1053 ext. 223
Printed Name:	Sharon G. Foley, P.E.
Authorizing Agent – Signature:	Sharon G Foley
Date:	2-12-2020

VPA Permit No. TBD
Facility Name: North River Wastewater Treatment Facility – Distribution and Marketing

COMPLIANCE REVIEW OF EXISTING PERMITS

Table 1. Existing Harrisonburg-Rockingham Regional Sewer Authority North River Wastewater Treatment Facility Permits

Agency	Permit Number	Description	Compliance Status
VDEQ	VA0060640	Wastewater Permit	In Compliance
VDEQ	VAN010042	Nutrient Trading General Permit	In Compliance
VDEQ	VAR52036	Stormwater General Permit	In Compliance
VDEQ	Reg. No. 81709	Air Permit	In Compliance

BIOSOLIDS TREATMENT PROCESS

BACKGROUND

The Harrisonburg-Rockingham Regional Sewer Authority (HRRSA) owns and operates the North River Wastewater Treatment Facility (WWTF) in Mount Crawford, Virginia. A general location map for the facility is found in Appendix 1. This permit application is submitted to obtain a Virginia Pollution Abatement Distribution and Marketing permit specifically for the Exceptional Quality (EQ) biosolids generated at the North River WWTF.

The North River WWTF generated approximately 2,581 dry tons (2,341 dry metric tons) of dewatered Class B biosolids in 2019. Currently, the Class B cake generated at the North River WWTF is transported off-site for beneficial use as a fertilizer on local farm sites. Landfilling of HRRSA's anaerobically digested cake solids at the Rockingham County Landfill is also approved. On occasion, liquid Class B biosolids may also be land applied. The North River WWTF recently installed a Komline-Sanderson thermal dryer, which will be used to thermally dry the Class B biosolids to produce an EQ thermally dried granular product. HRRSA wishes to begin beneficial use of the thermally dried biosolids via agricultural land application and direct marketing in Virginia.

TREATMENT PROCESS

The North River WWTP is owned and operated by the HRRSA. The annual average daily flow of the facility was 13.57 million gallons per day (mgd) in 2019. The facility operates under NPDES Permit VA0060640 and discharges treated effluent into the North River. A Process Flow Schematic is presented in *Figure 1*.

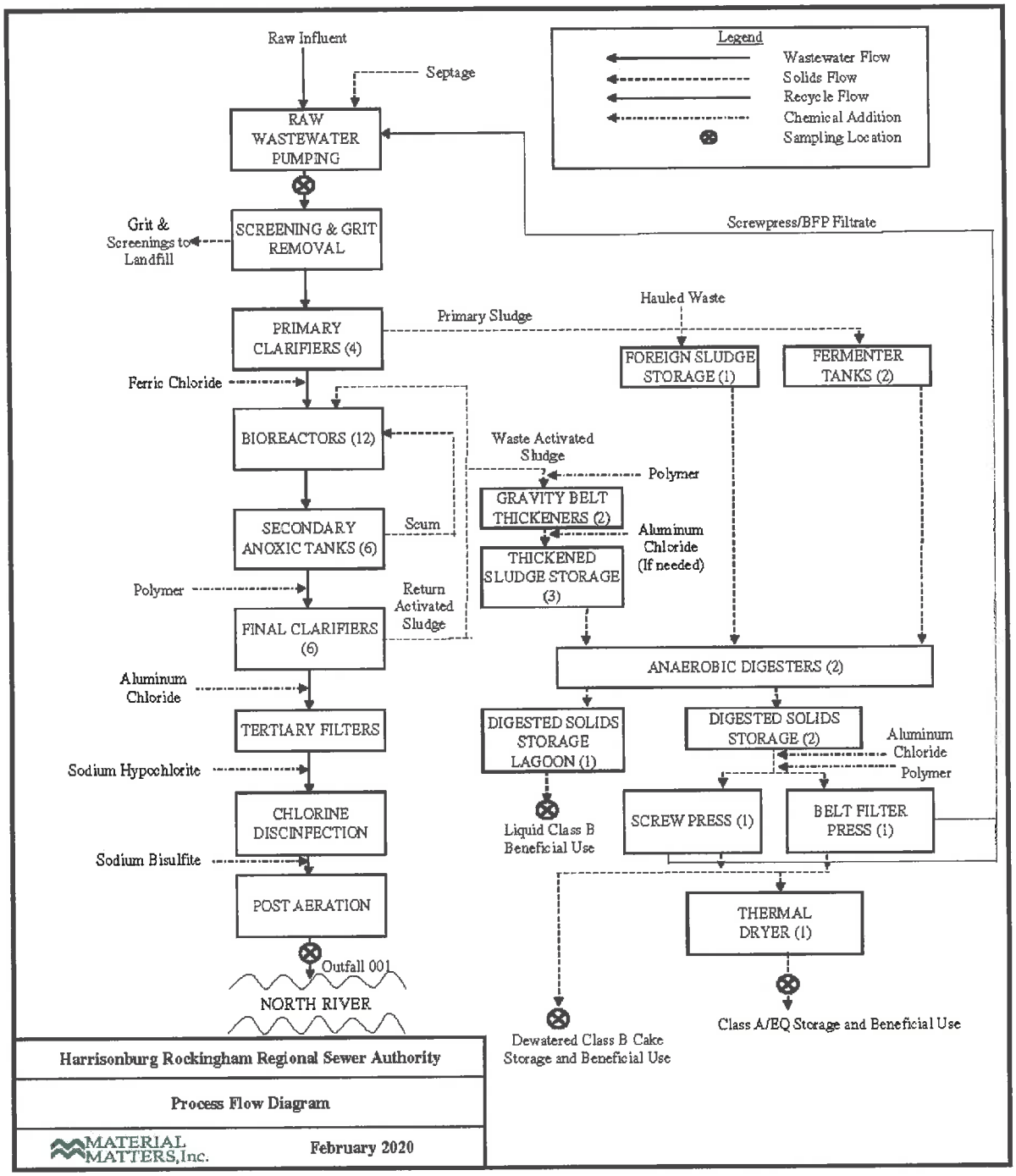

Figure 1. North River WWTF Process Flow Schematic

Principal components of the wastewater treatment system include:

- Screenings removal;
- Grit removal;
- Primary clarification;
- Activated sludge bioreactors:
- Chemical/biological phosphorus removal;
- Secondary clarification;
- Tertiary filtration;
- Sodium hypochlorite disinfection; and
- Post aeration

Principal components of the solids handling and treatment system include:

- Fermentation of primary solids;
- Gravity belt thickening of waste activated solids (WAS);
- Mesophilic anaerobic digestion of hauled waste, primary solids, and WAS;
- Dewatering via a screw press or BFP;
- Thermal drying;
- On-site storage; and
- Beneficial use.

Solids generated in the primary clarifiers are either pumped to a fermenter tank or directly into high-rate mesophilic anaerobic digesters. Primary solids are typically 0.6 to 1.2% total solids (TS). Waste activated solids (WAS) generated in the bioreactors are pumped to a holding tank, thickened in gravity belt thickeners, and pumped to a second holding tank. Thickened WAS are typically 3 to 4% TS. Thickened WAS solids are transferred from the thickeners to primary anaerobic digesters. The solids are stabilized through a high-rate mesophilic anaerobic digestion process. The primary digesters provide between 49 and 63% volatile solids reduction (VSR). After digestion, the stabilized solids are dewatered by a single screw press and/or belt filter press. Polymer is added as a coagulating agent just prior to solids introduction into the screw or belt filter press. Dewatered solids achieve an average of 17.5% TS. Dewatered solids are transported to a temporary storage hopper and then pumped into a Komline-Sanderson indirect thermal dryer.

The Komline-Sanderson dryer utilizes heated oil as a thermal transfer medium and a high degree of mechanical agitation to enhance contact with the product. Product enters the dryer and is moved through the dryer by revolving wedge-shaped paddles in a continuous process; the slanting surfaces of the wedge-shaped paddles generates shearing forces, which clean the paddle surfaces and maximize conductivity. Product is mixed and transported through the dryer continuously and is discharged onto two cooling screws. Dried product is screened to remove fines (~<1 mm) and overs (~>9.5 mm); the screenings are recirculated back to the head of the dryer and mixed with

the dewatered cake entering the dryer. The final screened dried product is transported onto the covered storage pad. The HRRSA has approximately 100 to 160 days of dried production storage available (see Biosolids Storage, below).

The dryer will typically be operated 24 hours per day, 7 days per week except for times when the dryer is undergoing routine maintenance (anticipated to be 3-4 consecutive days per month) or emergency maintenance. The dryer has capacity to produce 7 to 10 DMT of biosolids each day the dryer is operated.

It is anticipated that ~75%-100% of HRRSA's biosolids will be processed through the thermal dryer. Understanding that HRRSA produced 2,341 DMT in 2019, it is estimated that HRRSA will produced between 1,700 and 2,500 DMT of dried EQ biosolids annually.

ODOR CONTROL PLAN

A copy of the Odor Control Plan is found in Appendix 2.

BIOSOLIDS STORAGE

As EQ thermally dried biosolids are produced, they will be conveyed directly onto the existing covered storage pad located adjacent to the thermal dryer Approximately 100' x 150' of the existing storage pad will be dedicated for the storage of EQ dried biosolids. The EQ dried product storage area contains five-30' bays separated by 4' tall jersey barriers. A separate, segregated storage area that will continue to be dedicated for storage of Class B cake is approximately 60' x 100'.

On occasions when dryer capacity cannot process the entire solids volume, or when solids are processed through the dryer and the biosolids temperature drops below 176° F (80° C), Class B dried product is produced (See Temperature Testing narrative). The Class B material is diverted to the segregated area Class B storage area until transport to land application or landfilling is available. In order to prevent cross contamination between the EQ and Class B biosolids, each product will be storage in organized piles on the storage pad separated by a 10-feet high solid concrete push wall.

When needed, biosolids will be transported within the on-site storage pad with the front-end loader. Caution will be used between loading Class A (EQ) and Class B biosolids to prevent cross contamination. If the loader has moved Class B or other non-EQ material prior to moving the EQ solids, the front-end loader will be cleaned and disinfected using the following protocol:

1. The front-end loader bucket and front tires (and any surface that may have come into contact with Class B biosolids or other non-EQ material) will be washed off with a fire hose;

2. The front-end loader bucket and front tires (and any surface that may come into contact with the EQ biosolids) will be sprayed with sodium hypochlorite (~12% - 13% solution).
3. The loader will not be used to move the EQ solids until the sodium hypochlorite solution has been in contact with the contaminated surfaces for at least 20 minutes.

BIOSOLIDS DISTRIBUTION

It is anticipated that the majority of EQ biosolids will be distributed into the local bulk agriculture market through a local distributor (based on a recently completed biosolids market assessment), who will pick up the biosolids at the WWTF in bulk and market/distribute the product into a variety of agriculture and specialty markets. It is anticipated that most of the EQ biosolids will be used in Rockingham and the surrounding counties.

BIOSOLIDS POLLUTANT QUALITY

DESCRIPTION OF BIOSOLIDS POLLUTANT QUALITY

In accordance with Title 9 of the Virginia Administrative Code (VAC) 25-32-358, facilities land applying between 1,500 and 15,000 dry metric tons (DMT) per year are required to monitor biosolids pollutants once per 60 days (6 times per year). The North River WWTF produced approximately 2,341 DMT in 2019; therefore, HRRSA is required to analyze the North River WWTF biosolids at least once per 60 days. HRRSA conducts at least one monitoring event every other month to demonstrate that biosolids pollutant quality standards are being met. If more than one pollutant-monitoring event occurs in a monitoring period, all pollutant data will be provided and compared to 9VAC25-32-356 Table 3 for compliance purposes.

Biosolids monitoring for pollutants is performed on dried biosolids by a VELAP accredited laboratory. Once the biosolids pass through the drying process, grab samples are collected and submitted for testing. Appropriate containers, preservation methods, and chain-of-custody paperwork protocol, in accordance with 40 CFR Part 136, is observed at all times. Detailed description of the pollutant sampling protocol is found in the North River WWTF Biosolids Sampling Plan, as submitted in *Appendix 5.*

Biosolids generated at the North River WWTF between October and December 2019 consistently met the Table 3 Average Pollutant Concentrations under 9VAC25-32-356, as summarized in *Appendix 3, Table 2*. Supporting laboratory data can also be found in *Appendix 3*.

PATHOGEN REDUCTION AND VECTOR ATTRACTION REDUCTION TREATMENT PROCESSES

PATHOGEN REDUCTION

Pathogen Reduction (PR) requirements are satisfied in accordance with the criteria under 9VAC 25-32-675 (A)(7) [Class A - Alternative 5]. Class A Alternative 5 biosolids are treated in a Process to Further Reduce Pathogens (PFRP). Under this option, the following requirements must be met:

1. The density of fecal coliform must be reduced to less than 1,000 colony forming units per gram (CFU/g) in each discrete sample (dry weight basis);
2. Solids are dried to reduce the moisture content of the solids to 10% or lower, and
3. The temperature of the particles exceeds 176° F (80° C).

FECAL COLIFORM TESTING

Testing is conducted by an accredited VELAP laboratory. To demonstrate compliance, a composite sample consisting of at least seven (7) grab samples will be collected per monitoring period to demonstrate fecal coliform densities of 1,000 CFU/gram or less. Typically, fecal coliform testing will be collected on a bimonthly frequency. However, for this application package, samples were collected at a greater frequency during the three-month demonstration period (Month 1: 3 samples/week; Month 2: 2 samples/week; and Month 3: 1 sample/week) to confirm compliance with Class A PR standards. *Appendix 3, Table 1* provides a summary of the fecal coliform data showing that fecal coliform densities were within Class A limits in all sampling events during the 2019 demonstration period (October 2019 through January 2020). Supporting laboratory data can be found in *Appendix 3*.

PERCENT TOTAL SOLIDS TESTING

Percent total solids is monitored daily by the on-site laboratory (for process control), and bimonthly by an accredited contract laboratory (for compliance monitoring). To demonstrate compliance with Class A %TS requirements, samples collected for fecal coliform testing will also be analyzed for %TS to demonstrate moisture content less than 10%. Typically, %TS testing by a VELAP accredited laboratory will be collected at a minimum frequency of once per 60 days. However, for this application package, samples were collected at a greater frequency during the three-month demonstration period (Month 1: 3 samples/week; Month 2: 2 samples/week; and Month 3: 1 sample/week) to confirm compliance with Class A PR standards. Percent total solids will also be routinely tested by the HRRSA laboratory to demonstrate process control. HRRSA will typically collect one sample for %TS testing during each day when the dryer is in operation. *Appendix 3, Table 1* provides a summary of the %TS data showing that %TS were within Class A limits in all

sampling events during the 2019 demonstration period (October 2019 through January 2020). Supporting laboratory data can be found *Appendix 3*.

TEMPERATURE TESTING

Biosolids must also reach specific temperatures to meet Class A requirements. *Appendix 3 Table 1* provides a summary of the minimum daily thermal drying processing temperatures in zone 4 of the dryer over the three-month monitoring period. In order to be in compliance, the product must be in the dryer during a time when the biosolids temperature is elevated to at least 176° F. As indicated by the *Appendix 3, Table 1*, the minimum daily temperature of Bed 4 in the dryer always met the 176° F minimum requirement.

Currently, HRRSA personnel manually record the dryer temperature for each zone of the dryer at approximately an hourly frequency (Note: Temperature will be monitored electronically once it is incorporated into the SCADA system by a contractor in 2020). The temperature data includes biosolids temperature in four zones of the dryer: Bed 1, Bed 2, Bed 3, and Bed 4. Bed 4 is the dryer bed temperature immediately before the dried product exits the dryer. The temperature at the discharge end of the dryer (Bed/Zone 4) will be maintained between 230°F and 250°F with 240°F being the target. If the temperature drops to 235°F, the discharge weir level is raised until the temperature recovers; normally adjusting the weir will increase the temperature adequately to meet the target temperature reading. However, if raising the weir does not increase the temperature sufficiently, then the setpoint on the Thermal Fluid Heaters is increased by 2°F. If additional action is required to increase the dryer temperature, the feed rate to the dryer is reduced by 2 Hz. If the discharge temperature in Zone 4 gets below 230°F, the weir will be raised to prevent the discharge of solids until the temperature adjusts back to 235°F.

Bays #1 - #4 of the storage area are used to store Class A material. If solids discharge cannot be stopped, then segregate the solids discharged (during the time period the temperature was below 230°F) into a separate pile (normally Bay #5). This material will be considered Class B and will be transported to the landfill or used in land application. Biosolids will only be distributed under HRRSA's EQ Marketing and Distribution Permit when product temperatures collected during operation of the dryer consistently reach temperatures of over 176 °F in the dryer.

VECTOR ATTRACTION REDUCTION

Vector Attraction Reduction (VAR) requirements are achieved through thermal drying and are satisfied in accordance with the criteria under 9VAC25-32-685(B)(7) [Option 7]. Option 7 requires the percent solids of sewage sludge that does not contain unstabilized solids generated in a primary wastewater treatment process to be equal to or greater than 75% TS based on the moisture content and total solids prior to mixing with other materials. While HRRSA will use

Option 7 to meet VAR requirements, because HRRSA's EQ biosolids will meet PR through Class A - Alternative 5, the biosolids will always meet a minimum of 90 %TS.

APPENDIX 1 – GENERAL LOCATION MAP

Topographic Map
Mount Sydney Quadrangle
Harrisonburg-Rockingham
Regional Sewer Authority

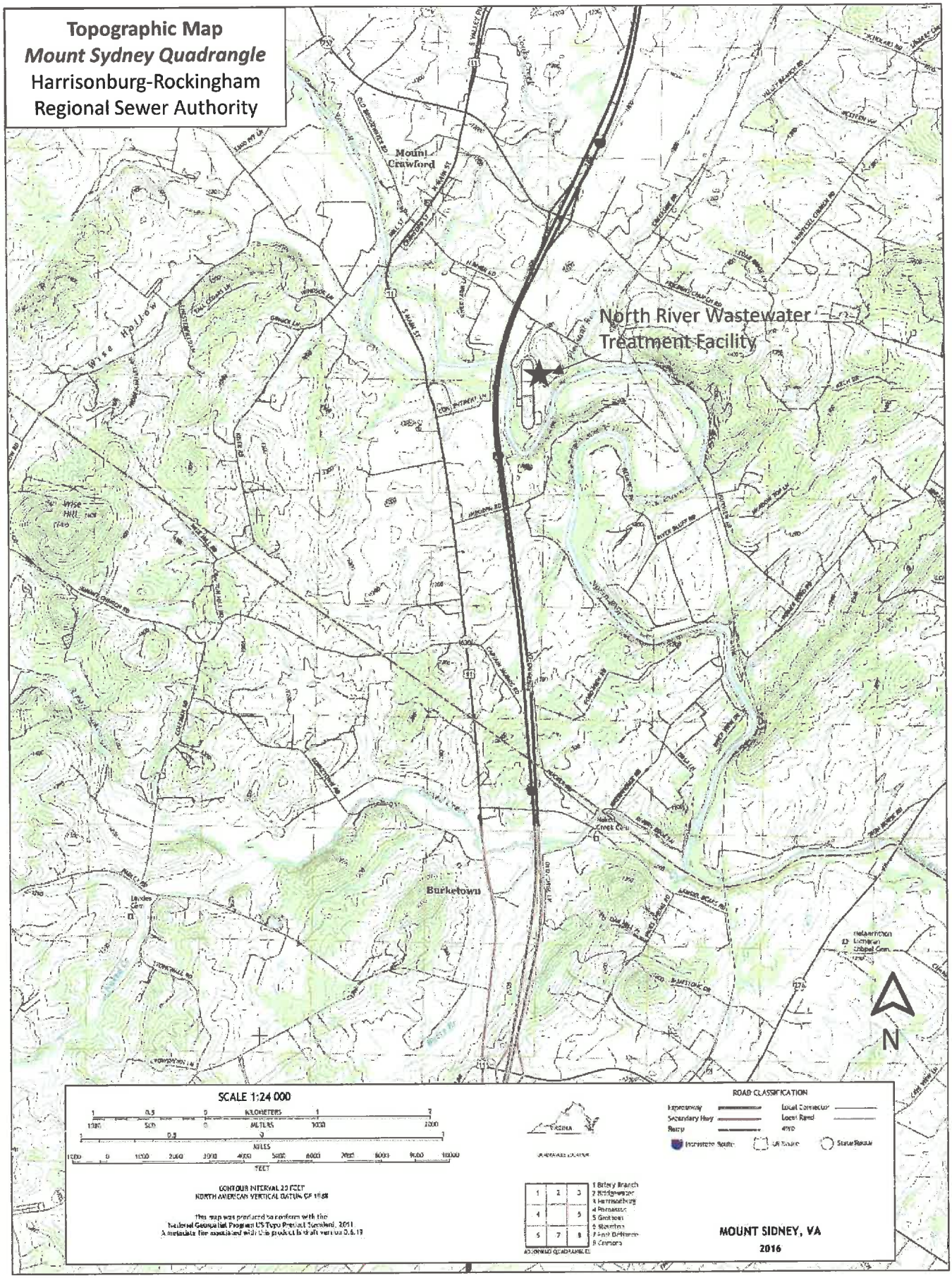

APPENDIX 2 – ODOR CONTROL PLAN

Odor Control Plan – Generator

Facility Name: Harrisonburg-Rockingham Regional Sewer Authority

Address: 856 North River Road

City State: Mt. Crawford, VA 22841

Contact Name: Anita Riggleman

Telephone Number: 540-434-1053, ext. 227

Email Address: ariggleman@hrrsa.org

Existing permits (e.g., VPDES/NPDES, VPA, other):

Agency	Permit Type	Permit Number
VDEQ	Wastewater Permit	VA0060640
VDEQ	Nutrient Trading General Permit	VAN010042
VDEQ	Stormwater General Permit	VAR52036
VDEQ	Air Permit	Reg. No. 81709

"Malodor" means an unusually strong or offensive odor associated with biosolids or sewage sludge as distinguished from odors commonly associated with biosolids or sewage sludge.

1) Identify methods to minimize odor during production of biosolids:
   Vector Attraction Reduction Method: 9VAC25-32-685(B)(2) – Reduction in volatile solids content by 38%; and 9VAC25-32-685(B)(7) – thermal drying to 90%TS
   Additional procedures (if applicable): Odor from the thermal dryer is controlled by a wet scrubber

2) Identify methods to identify malodorous biosolids at the generating facility:
   Operator and laboratory personnel who work with biosolids on a daily basis will provide notification to management if a malodor is noticed while working with or testing biosolids.

3) Identify methods to identify malodor after delivery to a land application site:
   It is anticipated that the majority of EQ biosolids will be distributed into the local through a local distributor (based on a recently completed biosolids market assessment), who will pick up the biosolids at the WWTF and transport the product to the final outlet (bulk agriculture and specialty markets). HRRSA will maintain open communication with this distributor to identify and report malodors at the beneficial use sites.

4) Identify methods to abate malodor after delivery to a land application site:
   - ☐ Removal
   - ☒ Other: Removal to landfill for disposal

5) Identify methods to abate malodor after biosolids are land applied:
   - ☒ Incorporation
   - ☐ Other

APPENDIX 3 – BIOSOLIDS ANALYTICAL DATA

VPA Permit Application - Distribution and Marketing of EQ Biosolids
North River Wastewater Treatment Facility
Appendix B

Table 1
EQ Biosolids Demonstration Period Monitoring Schedule / Results

	Wet Cake		Dry Product															
Date	Daily Total Processed (Metric Wet Tons)	Weekly Total Processed (Metric Wet Tons)	Daily Total Produced (Metric Wet Tons)	Weekly Total Produced (Metric Wet Tons)	Day	Week Number	TECAL MONITORING FREQUENCY	TECAL COLIFORM RESULTS (CFU/g)	NYS MONITORING FREQUENCY[2]	NMSA NYS FIELD CAKE	NMSA Lab NYS RESULTS	Pace Lab NYS RESULTS	Thermal Drying Time/pyrolysis temp[3]	Minimum Temp °F	Metals[1]	Organic Compounds[1]	Use during demonstration:	Comments
14-Oct-19	46.82		8.65		1			<1000	daily	17.6	95.3	95.4	continuous	245				
15-Oct-19	48.09		8.81		2			<1000	daily	17.3	94.4	94.3	continuous	258				
16-Oct-19	39.81		7.88		3			<1000	daily	18.8	94.7	95.5	continuous	242				
17-Oct-19	46.65	319.20	9.41	59.93	4	WEEK 1	3 samples/week		daily	19.0	94.2		continuous	233			sent to on-site storage/land application	10/17/2019 Operator error allowed Min temp to drop to 213 °F
18-Oct-19	49.35		9.10		5				daily	17.5	94.9		continuous	237				
19-Oct-19	49.02		8.32		6				daily	17.6	94.9		continuous	243				
20-Oct-19	38.76		7.14		7				daily	18.8	95.1		continuous	243				
21-Oct-19	44.59		8.68		8			<1000	daily	20.8	95.8	96.7	continuous	238				
22-Oct-19	34.92		7.89		9			<1000	daily	21.7	96.2	96.7	continuous	243				
23-Oct-19	42.31		7.94		10				daily	17.8	95.8		continuous	227			sent to on-site storage/land application	10/23/2019 No discharge from dryer while below 230 °F
24-Oct-19	44.84	300.62	8.87	59.20	11	WEEK 2	3 samples/week	<1000	daily	18.0	96.0	96.1	continuous	236				
25-Oct-19	45.34		8.64		12				daily	18.0	94.9		continuous	242				
26-Oct-19	46.17		8.07		13				daily	18.7	95.2		continuous	247				
27-Oct-19	49.62		8.56		14				daily	20.4	95.7		continuous	252	1/mo			
28-Oct-19	44.54		8.43		15			<1000	daily	18.0	95.1	96.4	continuous	244				
29-Oct-19	14.60		3.93		16			<1000[4]	daily	17.8	88.7	91.9	Midnight - 8:30 am	181				10/29/2019 Shut dryer down for punch list items to be fixed by contractor
30-Oct-19					17				daily				OFF					10/30/2019 Dryer shut down for the hol.
31-Oct-19	38.77	156.34	8.83	43.10	18	WEEK 3	3 sample/week		daily	22.4	97.1		8:00 am - Midnight	253			sent to on-site storage/land application	10/31/2019 Dryer startup at 9:30 am, no discharge until too late for a fecal sample
1-Nov-19	48.64		8.95		19				daily	17.1	92.5		continuous	237				11/1/2019 Operator error allowed Min temp to drop to 217 °F
2-Nov-19	49.81		8.68		20				daily	17.5	94.7		continuous	232				
3-Nov-19	59.58		9.56		21				daily	17.0	94.9		continuous	243				
4-Nov-19	46.61		9.69		22			<1000	daily	16.7	94.4	94.4	continuous	248				
5-Nov-19	30.30		9.83		23			<1000	daily	17.9	95.6	94.7	continuous	253				
6-Nov-19	41.07		8.29		24			<1000	daily	18.7	95.6	95.1	continuous	250				
7-Nov-19	43.23	311.46	8.78	58.35	25	WEEK 4	3 sample/week		daily	18.5	93.6		continuous	234			sent to on-site storage/land application	
8-Nov-19	41.20		8.11		26				daily	18.8	94.1		continuous	236				
9-Nov-19	41.42		8.29		27				daily	18.6	95.2		continuous	225				11/9/2019 Operator error allowed Min temp to drop to 215 °F
10-Nov-19	43.48		8.68		28				daily	19.5	95.4		continuous	239		1x/demo period		
11-Nov-19	45.47		8.79		29			<1000	daily	18.4	95.7	94.1	continuous	239				
12-Nov-19	42.92		8.72		30			<1000	daily	19.3	95.0	94.3	continuous	239				
13-Nov-19	48.59		8.15		31				daily	19.7	95.6		continuous	238				
14-Nov-19	48.36	319.28	8.97	60.18	32	WEEK 5	2 samples/week		daily	19.8	95.5		continuous	219			sent to on-site storage/land application	11/14/2019 Switch from Screw Press to Belt Press caused sudden drop in temp
15-Nov-19	43.36		7.84		33				daily	17.9	95.1		continuous	246				
16-Nov-19	47.19		8.66		34				daily	17.4	94.8		continuous	245				
17-Nov-19	44.79		8.09		35				daily	17.2	95.2		continuous	250				
18-Nov-19	46.32		8.85		36			<1000	daily	17.1	94.5	95.8	continuous	259				
19-Nov-19	46.71		8.37		37				daily	17.1	94.6		continuous	247				
20-Nov-19	39.15		7.29		38				daily	17.2	94.8		10:30 am - Midnight	287				11/20/2019 Dryer shut down at 10:30 am b/c pressure sensor diag. Dryer restarted at 10:50 am
21-Nov-19	49.92	290.76	8.97	59.08	39	WEEK 6	2 sample/week	<1000	daily	17.3	95.1	96.1	continuous	291			sent to on-site storage/land application	11/21/2019 Collected NYS and Pace samples at 231 °F temp
22-Nov-19	51.85		9.77		40				daily	18.8	94.7		continuous	250				
23-Nov-19	51.68		9.87		41				daily	17.1	96.8		continuous	241				
24-Nov-19	13.38				42				daily				9:30 am - 8:00 pm	213	1/mo			11/24/2019 Shut dryer down at 8:30 am due to the screw conveyor clogging up
25-Nov-19	32.49		5.96		43				daily	17.4	94.9		9:30 am - Midnight	236				11/25/2019 Started dryer back up at 9:30 am
26-Nov-19	51.09		8.91		44			<1000	daily	18.7	93.7	93.8	continuous	243				
27-Nov-19	51.93		9.37		45			<1000	daily	18.9	95.3	93.8	continuous	231				
28-Nov-19	13.67	151.16	1.67	27.22	46	WEEK 7	2 sample/week		daily	17.7	91.8		Midnight - 7:45 am	134			sent to on-site storage/land application	11/28/2019 Dryer shut down at 7:45 a.m. due to conveyor issues
29-Nov-19					47				daily				OFF					
30-Nov-19					48				daily				OFF					
1-Dec-19					49				daily				OFF					
2-Dec-19	13.28				50				daily				10:30 am - 8:00 pm	188				12/2/2019 Started dryer back up but it went down again due to biogas boiler system failure
3-Dec-19	26.67		4.77		51				daily	17.6	94.1		11:30 am - Midnight	233				12/3/2019 Started dryer back up at 11:30 am
4-Dec-19	49.44		9.38		52			<1000	daily	18.2	94.3	93.8	continuous	241				
5-Dec-19	49.97	279.68	8.98	49.86	53	WEEK 8	2 sample/week	<1000	daily	18.2	93.2	93.8	continuous	233			sent to on-site storage/land application	
6-Dec-19	47.60		9.11		54				daily	18.6	93.7		continuous	188				
7-Dec-19	48.37		8.02		55				daily	17.1	94.8		continuous	234				
8-Dec-19	49.12		8.86		56				daily	17.0	95.8		continuous	246				

VPA Permit Application - Distribution and Marketing of EQ Biosolids
North River Wastewater Treatment Facility
Appendix 3

Table 1
EQ Biosolids Demonstration Period Monitoring Schedule / Results

	Wet Cake		Dry Product															
Date	Daily Total Produced (Metric Wet Tons)	Weekly Total Produced (Metric Wet Tons)	Daily Total Produced (Metric Wet Tons)	Weekly Total Produced (Metric Wet Tons)	Day	Week Number	FECAL MONITORING FREQUENCY	FECAL COLIFORM RESULTS (CFU/g)	NTS MONITORING FREQUENCY[1]	HRRSA NTS FEED CAKE	HRRSA Lab NTS RESULTS	Pace Lab NTS RESULTS	Thermal Drying time/minimum temp[2]	Minimum Temp [3] F	Metals[4]	Organic Compounds[4]	Use during demonstration	Comments
9-Dec-19	48.70	339.43	8.80	60.67	57	WEEK 9	1 sample/week	[redacted]	daily	17.0	89.0	[redacted]	continuous	253	1/mo	1x/demo period	sent to on-site storage/land application	
10-Dec-19	49.11		8.97		58			[redacted]	daily	17.0	86.3		continuous	240				
11-Dec-19	48.72		8.85		59			[redacted]	daily	17.0	90.0		continuous	239				
12-Dec-19	47.79		8.66		60			[redacted]	daily	17.0	89.8		continuous	238				
13-Dec-19	48.08		8.59		61			[redacted]	daily	16.9	91.6		continuous	237				
14-Dec-19	47.12		8.52		62			[redacted]	daily	16.7	98.6		continuous	238				
15-Dec-19	48.91		8.61		63			[redacted]	daily	16.8	95.3		continuous	240				
16-Dec-19	48.13	334.30	8.75	58.34	64	WEEK 10	1 sample/week	[redacted]	daily	16.7	97.5	[redacted]	continuous	243			sent to on-site storage/land application	
17-Dec-19	51.67		9.34		65			[redacted]	daily	16.4	91.3		continuous	251				
18-Dec-19	44.80		8.37		66			[redacted]	daily	17.7	93.8		continuous	237				
19-Dec-19	48.94		8.61		67			[redacted]	daily	16.6	94.4		continuous	237				
20-Dec-19	48.84		8.62		68			[redacted]	daily	16.5	94.3		continuous	241				
21-Dec-19	46.41		8.11		69			[redacted]	daily	16.6	95.0		continuous	248				
22-Dec-19	48.41		7.69		70			[redacted]	daily	16.6	95.1		continuous	250				
23-Dec-19	47.38	331.99	8.26	57.72	71	WEEK 11	1 sample/week	[redacted]	daily	16.8	95.2		continuous	256			sent to on-site storage/land application	
24-Dec-19	47.10		8.29		72			[redacted]	daily	16.7	94.8		continuous	241				
25-Dec-19	45.50		7.93		73			[redacted]	daily	16.7	95.9		continuous	239				
26-Dec-19	47.13		8.22		74			[redacted]	daily	16.5	94.6	[redacted]	continuous	237				
27-Dec-19	49.24		8.58		75			[redacted]	daily	16.8	98.5		continuous	237				
28-Dec-19	47.77		8.27		76			[redacted]	daily	16.3	94.5		continuous	237				
29-Dec-19	47.77		8.25		77			[redacted]	daily	16.3	95.0		continuous	239				
30-Dec-19	46.34	337.46	8.08	58.79	78	WEEK 12	1 sample/week	[redacted]	daily	16.1	95.0	[redacted]	continuous	243			sent to on-site storage/land application	
31-Dec-19	49.30		8.58		79			[redacted]	daily	16.8	93.3		continuous	250				
1-Jan-20	48.13		8.20		80			[redacted]	daily	16.8	97.0		continuous	244				
2-Jan-20	51.40		8.68		81			[redacted]	daily	16.4	96.8		continuous	242				
3-Jan-20	47.68		8.04		82			[redacted]	daily	16.3	94.3		continuous	246				
4-Jan-20	49.81		7.68		83			[redacted]	daily	16.6	94.9		continuous	247				
5-Jan-20	50.24		8.58		84			[redacted]	daily	16.4	94.8		continuous	246				

[1] Minimum NTS sampling frequency is 1x per month. HRRSA tests NTS daily in house and for QA/QC. VELAP certified NTS results included with fecal coliform results.
[2] Results in Appendix 5, Table 1
[3] Results in Appendix 5, Table 2
[4] On two occasions, the 8 hour hold time was exceeded. On October 29, the samples were prepared approximately 8 hours and 7 minutes after collection, and on November 18, the samples were prepared approximately 12 hours and 34 minutes after collection. During the remainder of the demonstration period, HRRSA maintained consistent compliance with the 4 hour CRITERIA, so it is reasonable to conclude that these samples would have met Class A standards if tested within the agreed upon hold times.

[redacted] No sample/data collected

Table 2
EQ Biosolids Demonstration Period Metals/Nutrients Results

Metals/Nutrients to be tested for Monthly Sample Collection					
Report Date		**11/13/2019**	**12/16/2019**	**1/9/2020**	**Pollutant Concentration Limits**
Sample Date		**11/4/2019**	**12/4/2019**	**12/30/2019**	**Mo. Avg.**
Analysis:	**Unit**	**Mo. 1 Result**	**Mo. 2 Result**	**Mo. 3 Result**	
Percent Solids	%	94.9	96.2	96.5	
Volatile Solids	%	57.3	66.5	66.9	
pH	s.u.	7.2	7.3	7.6	
Nitrogen, (Nitrate)	mg/Kg	**<5.25**	**<4.83**	**<4.95**	
Nitrogen, (Ammonium)	mg/Kg	3350	3290	2850	
Nitrogen, (Total Kjeldahl)	mg/Kg	10600	49800	43200	
Phosphorus, (Total)	mg/Kg	34700	36400	35400	
Potassium, (Total)	mg/Kg	1340	1250	1410	
Arsenic	mg/Kg	**2.26**	**1.47**	**2.38**	***41***
Cadmium	mg/Kg	**2.10**	**2.33**	**1.54**	***39***
Copper	mg/Kg	328	326	283	***1,500***
Lead	mg/Kg	**9.33**	**8.28**	**6.67**	***300***
Mercury	mg/Kg	**0.198**	**0.160**	**0.205**	***17***
Molybdenum	mg/Kg	10.9	10.3	**9.12**	***75*** [1]
Nickel	mg/Kg	18.8	19.3	17.8	***420***
Selenium	mg/Kg	**3.25**	**0.896**	**2.26**	***100***
Zinc	mg/Kg	465	568	508	***2,800***

[1] Ceiling limit

Table 3
EQ Biosolids Demonstration Period Organic Compound Results

Organic Compounds to be tested for 1x during Demonstration Period (mg/kg dry weight basis):		
Report Date	12/23/2019	
Sample Date	12/11/2019	
Parameter	Result (µg/kg)	Result (mg/kg)
Aldrin	<24.6	<0.0246
Dieldrin	<246	<0.246
Benzo(a)pyrene	<4550	<4.55
Chlordane	<246	<0.246
DDT	<24.6	<0.0246
DDE	<24.6	<0.0246
DDD	<24.6	<0.0246
Dimethylnitrosamine	<11600	<11.6
Heptachlor	<24.6	<0.0246
Hexachlorobenzene	<11600	<11.6
Hexachlorobutadiene	<11600	<11.6
Lindane	<24.6	<0.0246
Toxaphene	<2460	<2.460
Trichloroethylene	<8.62	<0.00862

Pace Analytical Services, LLC
225 Industrial Park RD
Beaver, WV 25813
(800)999-0105

ANALYTICAL RESULTS

Project: EBRR MARKETING STUDY (HRRSA)
Pace Project No.: 734903

Sample: DB101419 **Lab ID: 734903001** Collected: 10/14/19 11:15 Received: 10/14/19 15:35 Matrix: Solid

Results reported on a "dry weight" basis and are adjusted for percent moisture, sample size and any dilutions.

Parameters	Results	Units	Report Limit	DF	Prepared	Analyzed	CAS No.	Qual
LEX Fecal Coliform (MF)	Analytical Method: SM 9222D - 2006 Preparation Method: SM 9222D - 2006							
Fecal Coliforms	**<1000**	**CFU/g**	**1000**	**1**	**10/14/19 16:05**	**10/15/19 15:42**		**D2**
Percent Moisture	Analytical Method: SM 2540G-11							
Percent Moisture	**4.6**	**%**	**0.10**	**1**		**10/19/19 14:48**		
2540G Total Percent Solids	Analytical Method: SM 2540G - 97							
Total Solids	**95.4**	**%**	**0.010**	**1**		**10/19/19 14:48**		

This report shall not be reproduced, except in full,
without the written consent of Pace Analytical Services, LLC.

Pace Analytical Services, LLC
225 Industrial Park RD
Beaver, WV 25813
(800)999-0105

ANALYTICAL RESULTS

Project: EBRR (HSSRA)
Pace Project No.: 734723

Sample: DB101519 **Lab ID: 734723001** Collected: 10/15/19 13:00 Received: 10/15/19 15:15 Matrix: Solid

Results reported on a "dry weight" basis and are adjusted for percent moisture, sample size and any dilutions.

Parameters	Results	Units	Report Limit	DF	Prepared	Analyzed	CAS No.	Qual
LEX Fecal Coliform (MF)	Analytical Method: SM 9222D - 2006 Preparation Method: SM 9222D - 2006							
Fecal Coliforms	**<1000**	CFU/g	1000	1	10/15/19 16:05	10/16/19 16:08		N2
Percent Moisture	Analytical Method: SM 2540G-11							
Percent Moisture	**5.7**	%	0.10	1		10/21/19 17:21		
2540G Total Percent Solids	Analytical Method: SM 2540G - 97							
Total Solids	**94.3**	%	0.010	1		10/21/19 17:21		

This report shall not be reproduced, except in full,
without the written consent of Pace Analytical Services, LLC.

Pace Analytical Services, LLC
225 Industrial Park RD
Beaver, WV 25813
(800)999-0105

ANALYTICAL RESULTS

Project: EBRR MARKETING STUDY (HRRSA)
Pace Project No.: 734905

Sample: DB101619 **Lab ID: 734905001** Collected: 10/16/19 09:55 Received: 10/16/19 15:40 Matrix: Solid

Results reported on a "dry weight" basis and are adjusted for percent moisture, sample size and any dilutions.

Parameters	Results	Units	Report Limit	DF	Prepared	Analyzed	CAS No.	Qual
LEX Fecal Coliform (MF)	Analytical Method: SM 9222D - 2006 Preparation Method: SM 9222D - 2006							
Fecal Coliforms	**<1000**	CFU/g	1000	1	10/16/19 16:48	10/17/19 15:57		N2
Percent Moisture	Analytical Method: SM 2540G-11							
Percent Moisture	**4.5**	%	0.10	1		10/22/19 18:17		
2540G Total Percent Solids	Analytical Method: SM 2540G - 97							
Total Solids	**95.5**	%	0.010	1		10/22/19 18:17		

This report shall not be reproduced, except in full,
without the written consent of Pace Analytical Services, LLC.

Pace Analytical Services, LLC
225 Industrial Park RD
Beaver, WV 25813
(800)999-0105

ANALYTICAL RESULTS

Project: EBRR Marketing Study(HSSRA)
Pace Project No.: 735331

Sample: DB102119 **Lab ID: 735331001** Collected: 10/21/19 10:18 Received: 10/21/19 15:15 Matrix: Solid

Results reported on a "dry weight" basis and are adjusted for percent moisture, sample size and any dilutions.

Parameters	Results	Units	Report Limit	DF	Prepared	Analyzed	CAS No.	Qual
LEX Fecal Coliform (MF)	Analytical Method: SM 9222D - 2005 Preparation Method: SM 9222D - 2006							
Fecal Coliforms	<1000	CFU/g	1000	1	10/21/19 16:06	10/22/19 16:16		N2
Percent Moisture	Analytical Method: SM 2540G-11							
Percent Moisture	3.33	%	0.100	11		10/23/19 18:03		
2540G Total Percent Solids	Analytical Method: SM 2540G - 97							
Total Solids	96.77	%	0.010	11		10/23/19 18:03		

This report shall not be reproduced, except in full,
without the written consent of Pace Analytical Services, LLC.

Pace Analytical Services, LLC
225 Industrial Park RD
Beaver, WV 25813
(800)999-0105

ANALYTICAL RESULTS

Project: EBRR Marketing Study(HSSRA)
Pace Project No.: 735463

Sample: DB102219 **Lab ID: 735463001** Collected: 10/22/19 09:51 Received: 10/22/19 14:10 Matrix: Solid

Results reported on a "dry weight" basis and are adjusted for percent moisture, sample size and any dilutions.

Parameters	Results	Units	Report Limit	DF	Prepared	Analyzed	CAS No.	Qual
LEX Fecal Coliform (MF)	Analytical Method: SM 9222D - 2006 Preparation Method: SM 9222D - 2006							
Fecal Coliforms	**<1000**	CFU/g	1000	1	10/22/19 16:27	10/23/19 14:30		N2
Percent Moisture	Analytical Method: SM 2540G-11							
Percent Moisture	**7.3**	%	0.10	1		10/25/19 18:15		
2540G Total Percent Solids	Analytical Method: SM 2540G - 97							
Total Solids	**92.7**	%	0.010	1		10/25/19 18:15		

This report shall not be reproduced, except in full,
without the written consent of Pace Analytical Services, LLC.

Pace Analytical Services, LLC
225 Industrial Park RD
Beaver, WV 25813
(800)999-0105

ANALYTICAL RESULTS

Project: EBRR (HSSRA)
Pace Project No.: 735804

Sample: DB102419 **Lab ID: 735804001** Collected: 10/24/19 10:40 Received: 10/24/19 14:22 Matrix: Solid

Results reported on a "dry weight" basis and are adjusted for percent moisture, sample size and any dilutions.

Parameters	Results	Units	Report Limit	DF	Prepared	Analyzed	CAS No.	Qual
LEX Fecal Coliform (MF)	Analytical Method: SM 9222D - 2006 Preparation Method: SM 9222D - 2006							
Fecal Coliforms	<1000	CFU/g	1000	1	10/24/19 16:25	10/25/19 16:13		N2
Percent Moisture	Analytical Method: SM 2540G-11							
Percent Moisture	4.9	%	0.100	1		10/30/19 17:24		
2540G Total Percent Solids	Analytical Method: SM 2540G-97							
Total Solids	95.1	%	0.010	1		10/30/19 17:24		

This report shall not be reproduced, except in full,
without the written consent of Pace Analytical Services, LLC.

Pace Analytical Services, LLC
225 Industrial Park RD
Beaver, WV 25813
(800)999-0105

ANALYTICAL RESULTS

Project: EBRR Marketing Study (HSSRA)
Pace Project No.: 736040

Sample: DB102819 **Lab ID: 736040001** Collected: 10/28/19 10:00 Received: 10/28/19 15:15 Matrix: Solid

Results reported on a "dry weight" basis and are adjusted for percent moisture, sample size and any dilutions.

Parameters	Results	Units	Report Limit	DF	Prepared	Analyzed	CAS No.	Qual
LEX Fecal Coliform (MF)	Analytical Method: SM 9222D - 2006 Preparation Method: SM 9222D - 2006							
Fecal Coliforms	<1000	CFU/g	1000	1	10/28/19 16:05	10/29/19 16:00		N2
Percent Moisture	Analytical Method: SM 2540G-11							
Percent Moisture	3.6	%	0.10	1		10/30/19 17:28		
2540G Total Percent Solids	Analytical Method: SM 2540G - 97							
Total Solids	96.4	%	0.010	1		10/30/19 17:28		

This report shall not be reproduced, except in full,
without the written consent of Pace Analytical Services, LLC.

Pace Analytical Services, LLC
225 Industrial Park RD
Beaver, WV 25813
(800)999-0105

ANALYTICAL RESULTS

Project: EBRR (HSSRA)
Pace Project No.: 736183

Sample: DB102919 **Lab ID: 736183001** Collected: 10/29/19 08:30 Received: 10/29/19 15:15 Matrix: Solid

Results reported on a "dry weight" basis and are adjusted for percent moisture, sample size and any dilutions.

Parameters	Results	Units	Report Limit	DF	Prepared	Analyzed	CAS No.	Qual
LEX Fecal Coliform (MF)	Analytical Method: SM 9222D - 2006 Preparation Method: SM 9222D - 2006							
Fecal Coliforms	**<1000**	CFU/g	1000	1	10/29/19 16:37	10/30/19 15:43		N2
Percent Moisture	Analytical Method: SM 2540G-11							
Percent Moisture	**7.1**	%	0.10	1		11/01/19 16:09		
2540G Total Percent Solids	Analytical Method: SM 2540G - 97							
Total Solids	**92.9**	%	0.010	1		11/01/19 16:09		

This report shall not be reproduced, except in full,
without the written consent of Pace Analytical Services, LLC.

Pace Analytical Services, LLC
225 Industrial Park RD
Beaver, WV 25813
(800)999-0105

ANALYTICAL RESULTS

Project: EBRR (HSSRA)
Pace Project No.: 736809

Sample: DB110419 **Lab ID: 736809001** Collected: 11/04/19 09:12 Received: 11/04/19 15:25 Matrix: Solid

Results reported on a "dry weight" basis and are adjusted for percent moisture, sample size and any dilutions.

Parameters	Results	Units	Report Limit	DF	Prepared	Analyzed	CAS No.	Qual
LEX Fecal Coliform (MF)	Analytical Method: SM 9222D - 2006 Preparation Method: SM 9222D - 2006							
Fecal Coliforms	<1000	CFU/g	1000	1	11/04/19 16:00	11/05/19 15:00		N2
Percent Moisture	Analytical Method: SM 2540G-11							
Percent Moisture	5.56	%	0.100	1		11/07/19 18:05		
2540G Total Percent Solids	Analytical Method: SM 2540G - 97							
Total Solids	94.44	%	0.010	1		11/07/19 18:05		

This report shall not be reproduced, except in full,
without the written consent of Pace Analytical Services, LLC.

Pace Analytical Services, LLC
225 Industrial Park RD
Beaver, WV 25813
(800)999-0105

ANALYTICAL RESULTS

Project: EBRR Marketing Study (HSSRA)
Pace Project No.: 736992

Sample: DB110519 **Lab ID: 736992001** Collected: 11/05/19 09:45 Received: 11/05/19 14:29 Matrix: Solid

Results reported on a "dry weight" basis and are adjusted for percent moisture, sample size and any dilutions.

Parameters	Results	Units	Report Limit	DF	Prepared	Analyzed	CAS No.	Qual
LEX Fecal Coliform (MF)	Analytical Method: SM 9222D - 2006 Preparation Method: SM 9222D - 2006							
Fecal Coliforms	**<1000**	CFU/g	1000	1	11/05/19 15:45	11/06/19 14:45		N2
Percent Moisture	Analytical Method: SM 2540G-11							
Percent Moisture	**5.3**	%	0.10	1		11/07/19 18:06		
2540G Total Percent Solids	Analytical Method: SM 2540G - 97							
Total Solids	**94.7**	%	0.010	1		11/07/19 18:06		

This report shall not be reproduced, except in full,
without the written consent of Pace Analytical Services, LLC.

Pace Analytical Services, LLC
225 Industrial Park RD
Beaver, WV 25813
(800)999-0105

ANALYTICAL RESULTS

Project: EBRR (HSSRA)
Pace Project No.: 737234

Sample: DB110619 **Lab ID: 737234001** Collected: 11/06/19 09:30 Received: 11/06/19 14:49 Matrix: Solid

Results reported on a "dry weight" basis and are adjusted for percent moisture, sample size and any dilutions.

Parameters	Results	Units	Report Limit	DF	Prepared	Analyzed	CAS No.	Qual
LEX Fecal Coliform (MF)	Analytical Method: SM 9222D - 2006 Preparation Method: SM 9222D - 2006							
Fecal Coliforms	**<1000**	CFU/g	1000	1	11/06/19 15:50	11/07/19 15:10		N2
Percent Moisture	Analytical Method: SM 2540G-11							
Percent Moisture	**6.3**	%	0.10	1		11/11/19 13:47		
2540G Total Percent Solids	Analytical Method: SM 2540G - 97							
Total Solids	**93.7**	%	0.010	1		11/11/19 13:47		

This report shall not be reproduced, except in full,
without the written consent of Pace Analytical Services, LLC.

Pace Analytical Services, LLC
225 Industrial Park RD
Beaver, WV 25813
(800)999-0105

ANALYTICAL RESULTS

Project: EBRR Marketing Study (HSSRA)
Pace Project No.: 737736

Sample: DB111119 **Lab ID: 737736001** Collected: 11/11/19 09:22 Received: 11/11/19 15:10 Matrix: Solid

Results reported on a "dry weight" basis and are adjusted for percent moisture, sample size and any dilutions.

Parameters	Results	Units	Report Limit	DF	Prepared	Analyzed	CAS No.	Qual
LEX Fecal Coliform (MF)	Analytical Method: SM 9222D - 2006 Preparation Method: SM 9222D - 2006							
Fecal Coliforms	**<1000**	CFU/g	1000	1	11/11/19 15:40	11/12/19 16:00		N2
Percent Moisture	Analytical Method: SM 2540G-11							
Percent Moisture	**5.7**	%	**0.10**	1		11/15/19 17:37		
2540G Total Percent Solids	Analytical Method: SM 2540G - 97							
Total Solids	**94.3**	%	**0.010**	1		11/15/19 17:37		

This report shall not be reproduced, except in full,
without the written consent of Pace Analytical Services, LLC.

Pace Analytical Services, LLC
225 Industrial Park RD
Beaver, WV 25813
(800)999-0105

ANALYTICAL RESULTS

Project: EBRR Marketing Study (HSSRA)
Pace Project No.: 737817

Sample: DB111219 **Lab ID: 737817001** Collected: 11/12/19 09:32 Received: 11/12/19 15:00 Matrix: Solid

Results reported on a "dry weight" basis and are adjusted for percent moisture, sample size and any dilutions.

Parameters	Results	Units	Report Limit	DF	Prepared	Analyzed	CAS No.	Qual
LEX Fecal Coliform (MF)	Analytical Method: SM 9222D - 2006 Preparation Method: SM 9222D - 2006							
Fecal Coliforms	**<1000**	CFU/g	1000	1.1	11/12/19 16:32	11/13/19 16:20		N2
Percent Moisture	Analytical Method: SM 2540G-11							
Percent Moisture	**5.5**	%	0.100	1.1		11/15/19 17:38		
2540G Total Percent Solids	Analytical Method: SM 2540G-97							
Total Solids	**94.5**	%	0.010	1.1		11/15/19 17:38		

This report shall not be reproduced, except in full,
without the written consent of Pace Analytical Services, LLC.

Pace Analytical Services, LLC
225 Industrial Park RD
Beaver, WV 25813
(800)999-0105

ANALYTICAL RESULTS

Project: EBRR Marketing Study(HSSRA)
Pace Project No.: 738656

Sample: DB111819 **Lab ID: 738656001** Collected: 11/18/19 10:59 Received: 11/18/19 15:00 Matrix: Solid

Results reported on a "dry weight" basis and are adjusted for percent moisture, sample size and any dilutions.

Parameters	Results	Units	Report Limit	DF	Prepared	Analyzed	CAS No.	Qual
LEX Fecal Coliform (MF)	Analytical Method: SM 9222D - 2006 Preparation Method: SM 9222D - 2006							
Fecal Coliforms	**<1000**	CFU/g	1000	1	11/19/19 09:33	11/20/19 10:12		N2
Percent Moisture	Analytical Method: SM 2540G-11							
Percent Moisture	**7.4**	%	0.10	1		11/25/19 17:31		
2540G Total Percent Solids	Analytical Method: SM 2540G - 97							
Total Solids	**92.6**	%	0.010	1		11/25/19 17:31		

This report shall not be reproduced, except in full,
without the written consent of Pace Analytical Services, LLC.

Pace Analytical Services, LLC
225 Industrial Park RD
Beaver, WV 25813
(800)999-0105

ANALYTICAL RESULTS

Project: EBRR (HSSRA)
Pace Project No.: 739461

Sample: DB112119 **Lab ID: 739461001** Collected: 11/21/19 08:40 Received: 11/21/19 13:05 Matrix: Solid

Results reported on a "wet-weight" basis

Parameters	Results	Units	Report Limit	DF	Prepared	Analyzed	CAS No.	Qual
LEX Fecal Coliform (MF)	Analytical Method: SM 9222D - 2006 Preparation Method: SM 9222D - 2006							
Fecal Coliforms	<1000	CFU/g	1000	1	11/21/19 15:44	11/22/19 13:50		N2
2540G Total Percent Solids	Analytical Method: SM 2540G - 97							
Total Solids	90.3	%	0.010	1		12/06/19 16:28		H1

This report shall not be reproduced, except in full,
without the written consent of Pace Analytical Services, LLC.

Pace Analytical Services, LLC
225 Industrial Park RD
Beaver, WV 25813
(800)999-0105

ANALYTICAL RESULTS

Project: EBRR Marketing Study (HSSRA)
Pace Project No.: 739640

Sample: DB112619 **Lab ID: 739640001** Collected: 11/26/19 08:49 Received: 11/26/19 15:15 Matrix: Solid

Results reported on a "wet-weight" basis

Parameters	Results	Units	Report Limit	DF	Prepared	Analyzed	CAS No.	Qual
LEX Fecal Coliform (MF)	Analytical Method: SM 9222D - 2006 Preparation Method: SM 9222D - 2006							
Fecal Coliforms	**<1000**	CFU/g	1000	1	11/26/19 15:55	11/27/19 14:42		N2
2540G Total Percent Solids	Analytical Method: SM 2540G - 97							
Total Solids	**93.8**	%	0.010	1		12/06/19 16:31		H1

This report shall not be reproduced, except in full,
without the written consent of Pace Analytical Services, LLC.

Pace Analytical Services, LLC
225 Industrial Park RD
Beaver, WV 25813
(800)999-0105

ANALYTICAL RESULTS

Project: EBRR Marketing Study (HSSRA)
Pace Project No.: 739687

Sample: DB112719 **Lab ID: 739687001** Collected: 11/27/19 09:26 Received: 11/27/19 12:16 Matrix: Solid

Results reported on a "wet-weight" basis

Parameters	Results	Units	Report Limit	DF	Prepared	Analyzed	CAS No.	Qual
LEX Fecal Coliform (MF)	Analytical Method: SM 9222D - 2006 Preparation Method: SM 9222D - 2006							
Fecal Coliforms	<1000	CFU/g	1000	1	11/27/19 14:50	11/28/19 16:42		N2
2540G Total Percent Solids	Analytical Method: SM 2540G - 97							
Total Solids	93.0	%	0.010	1		12/06/19 16:32		H1

This report shall not be reproduced, except in full,
without the written consent of Pace Analytical Services, LLC.

Pace Analytical Services, LLC
225 Industrial Park RD
Beaver, WV 25813
(800)999-0105

ANALYTICAL RESULTS

Project: EBRR (HSSRA)
Pace Project No.: 7310305

Sample: DB120419 **Lab ID: 7310305001** Collected: 12/04/19 09:13 Received: 12/04/19 15:00 Matrix: Solid

Results reported on a "wet-weight" basis

Parameters	Results	Units	Report Limit	DF	Prepared	Analyzed	CAS No.	Qual
LEX Fecal Coliform (MF)	Analytical Method: SM 9222D - 2006 Preparation Method: SM 9222D - 2006							
Fecal Coliforms	**<1000**	CFU/g	1000	1	12/04/19 16:45	12/05/19 16:22		N2
Percent Moisture	Analytical Method: SM 2540G-11							
Percent Moisture	**6.4**	%	0.10	1		12/09/19 16:38		
2540G Total Percent Solids	Analytical Method: SM 2540G - 97							
Total Solids	**93.6**	%	0.010	1		12/09/19 16:38		

This report shall not be reproduced, except in full,
without the written consent of Pace Analytical Services, LLC.

Pace Analytical Services, LLC
225 Industrial Park RD
Beaver, WV 25813
(800)999-0105

ANALYTICAL RESULTS

Project: EBRR (HSSRA)
Pace Project No.: 7310493

Sample: DB120519 **Lab ID: 7310493001** Collected: 12/05/19 08:55 Received: 12/05/19 14:55 Matrix: Solid

Results reported on a "wet-weight" basis

Parameters	Results	Units	Report Limit	DF	Prepared	Analyzed	CAS No.	Qual
LEX Fecal Coliform (MF)	Analytical Method: SM 9222D - 2006 Preparation Method: SM 9222D - 2006							
Fecal Coliforms	<1000	CFU/g	1000	1	12/05/19 16:48	12/06/19 15:30		N2
2540G Total Percent Solids	Analytical Method: SM 2540G - 97							
Total Solids	92.0	%	0.010	1		12/17/19 17:39		H1

This report shall not be reproduced, except in full,
without the written consent of Pace Analytical Services, LLC.

Pace Analytical Services, LLC
225 Industrial Park RD
Beaver, WV 25813
(800)899-0105

ANALYTICAL RESULTS

Project: EBRR (HSSRA)
Pace Project No.: 7310865

Sample: DB120919 **Lab ID: 7310865001** Collected: 12/09/19 09:32 Received: 12/09/19 14:42 Matrix: Solid

Results reported on a "wet-weight" basis

Parameters	Results	Units	Report Limit	DF	Prepared	Analyzed	CAS No.	Qual
LEX Fecal Coliform (MF)	Analytical Method: SM 9222D - 2006 Preparation Method: SM 9222D - 2006							
Fecal Coliforms	<1000	CFU/g	1000	1	12/09/19 15:58	12/10/19 16:37		N2
2540G Total Percent Solids	Analytical Method: SM 2540G - 97							
Total Solids	96.3	%	0.010	1		12/19/19 17:34		H1

This report shall not be reproduced, except in full,
without the written consent of Pace Analytical Services, LLC.

Pace Analytical Services, LLC
225 Industrial Park RD
Beaver, WV 25813
(800)999-0105

ANALYTICAL RESULTS

Project: EBRR Marketing Study (HSSRA)
Pace Project No.: 7311703

Sample: DB121619 **Lab ID: 7311703001** Collected: 12/16/19 09:35 Received: 12/16/19 12:00 Matrix: Solid

Results reported on a "wet-weight" basis

Parameters	Results	Units	Report Limit	DF	Prepared	Analyzed	CAS No.	Qual
LEX Fecal Coliform (MF)	Analytical Method: SM 9222D - 2006 Preparation Method: SM 9222D - 2006							
Fecal Coliforms	**<1000**	CFU/g	1000	1	12/16/19 17:05	12/17/19 16:30		N2
2540G Total Percent Solids	Analytical Method: SM 2540G - 97							
Total Solids	**93.3**	**%**	0.010	1		12/19/19 17:37		

This report shall not be reproduced, except in full,
without the written consent of Pace Analytical Services, LLC.

Waypoint ANALYTICAL
7621 Whitepine Road, Richmond, VA 23237
Main 804-743-9401 ° Fax 804-271-6446
www.waypointanalytical.com

70800
Harrisonburg Rockingham Reg Sewer Authority
Anita Riggleman
856 North River Road
Mt Crawford , VA 22841

Project Information : Aaron Barnett
EBRR Marketing Study

Report Date : 11/13/2019
Received : 11/05/2019

Pauric McGroary

Submitted By : Aaron Barnett
Report Number : 19-309-0002

REPORT OF ANALYSIS

Pauric McGroary
Agronomist

Lab No : 69513
Sample ID : DB110419

Matrix: Solids
Sampled: 11/4/2019 9:12

Moisture	5.13	%	0.010	1	11/06/19 17:12	ADM	SM-2540G
Selenium	3.25	mg/Kg - dry	0.527	1	11/08/19 13:44	KKM	6010D

Total Solids	94.9	%	0.010	1	11/06/19 17:12	ADM	SM-2540G
Total Kjeldahl Nitrogen	10600	mg/Kg - dry	264	1	11/12/19 12:00	JPJ	SM-4500-NH3C-TKN
Phosphorus	34700	mg/Kg - dry	52.7	10	11/11/19 17:35	KKM	6010D
Potassium	1340	mg/Kg - dry	52.7	10	11/11/19 17:35	KKM	6010D
Calcium	23900	mg/Kg - dry	264	10	11/11/19 17:35	KKM	6010D
Magnesium	5480	mg/Kg - dry	5.27	1	11/08/19 13:44	KKM	6010D
Manganese	301	mg/Kg - dry	0.527	1	11/07/19 22:31	KKM	6010D
Copper	328	mg/Kg - dry	0.264	1	11/08/19 13:44	KKM	6010D
Organic N	7290	mg/Kg - dry	264	1	11/12/19 12:00		CALCULATION
Nitrate+Nitrite-N	<5.25	mg/Kg - dry	5.25	1	11/12/19 14:11	ZBD	4500NO3F-2011
Nickel	18.8	mg/Kg - dry	0.263	1	11/08/19 13:44	KKM	6010D
Mercury	0.198	mg/Kg - dry	0.0165	1	11/08/19 16:36	TJS	SW-7471B
pH	7.2	s.u.		1	11/11/19 06:22	JSL	9045D
Calcium Carbonate Equivalent	6.7	% - dry	0.1	1	11/08/19 13:43	DXT	AOAC 955.01
Total Volatile Solids	57.3	%	0.010	1	11/06/19 17:12	ADM	SM-2540G

Qualifiers/ Definitions

*	Outside QC Limit	B	Analyte detected in blank
C	GCMS Confirmation Analysis	E	Result above cal range
g	GGA Outside QC Limits	H	Beyond holding time
J	Estimated value	M	Minimum value
NA	Not on Scope of Accreditation	NC	Not confirmed
Q	RPD >40% dual column results	T	Sample exhibits toxicity
U	Unconfirmed	~	Refer to cover letter.

Waypoint ANALYTICAL

7621 Whitepine Road, Richmond, VA 23237
Main 804-743-9401 • Fax 804-271-6446
www.waypointanalytical.com

70800
Harrisonburg Rockingham Reg Sewer Authority
Anita Rigglemann
856 North River Road
Mt Crawford , VA 22841

Project Information : Aaron Barnett
EBRR Marketing Study

Report Date : 11/13/2019
Received : 11/05/2019

Pauric McGroary

Submitted By : Aaron Barnett
Report Number : **19-309-0002**

REPORT OF ANALYSIS

Pauric McGroary
Agronomist

Lab No : **69513**
Sample ID : **DB110419**

Matrix: **Solids**
Sampled: **11/4/2019 9:12**

Test	Results	Units	MQL	DF	Date / Time Analyzed	By	Analytical Method
Alkalinity (as CaCO3)	**2360**	mg/Kg - dry	105	1	11/11/19 17:15	CJD	SM-2320 B
Ammonia Nitrogen	**3350**	mg/Kg - dry	105	1	11/12/19 15:00	JPD	SM-4500-NH3C
Arsenic	**2.26**	mg/Kg - dry	0.527	1	11/08/19 13:44	KKM	6010D
Boron	**39.8**	mg/Kg - dry	2.64	1	11/08/19 13:44	KKM	6010D
Cadmium	**2.10**	mg/Kg - dry	0.105	1	11/07/19 22:31	BKN	6010D
Chromium	**48.8**	mg/Kg - dry	0.263	1	11/07/19 22:31	KKM	6010D
Lead	**9.33**	mg/Kg - dry	0.316	1	11/08/19 13:44	KKM	6010D
Molybdenum	**10.9**	mg/Kg - dry	0.263	1	11/08/19 13:44	KKM	6010D
Zinc	**465**	mg/Kg - dry	1.32	1	11/07/19 22:31	KKM	6010D

Qualifiers/ Definitions

B Analyte detected in blank

H Beyond holding time

Waypoint ANALYTICAL

7621 Whitepine Road, Richmond, VA 23237
Main 804-743-9401 • Fax 804-271-6446
www.waypointanalytical.com

70800
Harrisonburg Rockingham Reg Sewer Authority
Anita Rigglemann
856 North River Road
Mt Crawford , VA 22841

Project Information : EBRR Marketing Study

Report Date : 12/16/2019
Received : 12/06/2019

Pauric McGroary
Agronomist

Report Number : 19-340-0006

REPORT OF ANALYSIS

Lab No: 69753
Sample ID: DB120419

Matrix: Solids
Sampled: 12/4/2019 9:13

Test	Results	Units	MQL	DF	Date/Time Analyzed	By	Analytical Method
Moisture	3.79	%	0.010	1	12/10/19 17:15	ADM	SM-2540G
Calcium Carbonate Equivalent	11.2	% - dry	0.1	1	12/13/19 11:22	DXT	AOAC 955.01

Test	Results	Units	MQL	DF	Date/Time Analyzed	By	Analytical Method
Alkalinity (as CaCO3)	12800	mg/Kg - dry	103	1	12/12/19 08:50	CJD	SM-2320 B
Ammonia Nitrogen	3290	mg/Kg - dry	104	1	12/11/19 14:30	JPJ	SM4500-NH3C
Nitrate+Nitrite-N	<4.83	mg/Kg - dry	4.83	1	12/11/19 14:54	ZBD	4500NO3F-2011
Organic N	46500	mg/Kg - dry	260	1	12/11/19 09:30		CALCULATION
pH	7.3	s.u.		1	12/11/19 04:57	JSL	9045D
Total Solids	96.2	%	0.010	1	12/10/19 17:15	ADM	SM-2540G
Total Volatile Solids	66.5	%	0.010	1	12/10/19 17:15	ADM	SM-2540G
Total Kjeldahl Nitrogen	49800	mg/Kg - dry	260	1	12/11/19 09:30	JPJ	SM-4500-NH3C+TKN
Phosphorus	36400	mg/Kg - dry	52.0	10	12/12/19 19:13	KKM	6010D
Arsenic	1.47	mg/Kg - dry	0.519	1	12/11/19 20:55	KKM	6010D
Boron	36.6	mg/Kg - dry	2.60	1	12/11/19 20:55	KKM	6010D
Calcium	24200	mg/Kg - dry	260	10	12/12/19 19:13	KKM	6010D
Cadmium	2.33	mg/Kg - dry	0.104	1	12/11/19 20:55	KKM	6010D
Chromium	59.7	mg/Kg - dry	0.259	1	12/11/19 20:55	KKM	6010D
Copper	326	mg/Kg - dry	0.260	1	12/11/19 20:55	KKM	6010D
Lead	8.28	mg/Kg - dry	0.311	1	12/11/19 20:55	KKM	6010D

Qualifiers/ Definitions

DF Dilution Factor
MQL Method Quantitation Limit
L Limit Exceeded

Waypoint ANALYTICAL

7621 Whitepine Road, Richmond, VA 23237
Main 804-743-9401 ° Fax 804-271-5446
www.waypointanalytical.com

70800
Harrisonburg Rockingham Reg Sewer Authority
Anita Riggleman
856 North River Road
Mt Crawford , VA 22841

Project Information : EBRR Marketing Study

Report Date : 12/16/2019
Received : 12/06/2019

Pauric McGroary
Agronomist

Report Number : **19-340-0006**

REPORT OF ANALYSIS

Lab No : **69763**
Sample ID : **DB120419**

Matrix: **Solids**
Sampled: **12/4/2019 9:13**

Test	Results	Units	MQL	DF	Date / Time Analyzed	By	Analytical Method
Magnesium	**5110**	mg/Kg - dry	5.20	1	12/11/19 20:55	KKM	6010D
Manganese	**357**	mg/Kg - dry	0.519	1	12/11/19 20:55	KKM	6010D
Mercury	**0.160**	mg/Kg - dry	0.0163	1	12/11/19 13:27	TJS	SW-7471B
Molybdenum	**10.3**	mg/Kg - dry	0.259	1	12/11/19 20:55	KKM	6010D
Nickel	**19.3**	mg/Kg - dry	0.259	1	12/11/19 20:55	KKM	6010D
Potassium	**1250**	mg/Kg - dry	52.0	10	12/12/19 19:13	KKM	6010D
Selenium	**0.896**	mg/Kg - dry	0.519	1	12/11/19 20:55	KKM	6010D
Zinc	**568**	mg/Kg - dry	1.30	1	12/11/19 20:55	KKM	6010D

Qualifiers/ Definitions

DF Dilution Factor
MQL Method Quantitation Limit
L Limit Exceeded

Waypoint ANALYTICAL

7621 Whitepine Road, Richmond, VA 23237
Main 804-743-9401 • Fax 804-271-6446
www.waypointanalytical.com

70800
Harrisonburg Rockingham Reg Sewer Authority
Anita Rigglemann
856 North River Road
Mt Crawford , VA 22841

Project Information : DB121119

Report Date : 12/23/2019
Received : 12/16/2019

Pauric McGroary
Agronomist

Report Number : **19-350-0006**

REPORT OF ANALYSIS

LabNo: **69906**
SampleID: **DB121119**

Matrix: **Solids**
Sampled: **12/11/2019 9:25**

Analytical Method: 8081A **Prep Batch(es):** L469643 12/19/19 09:00
Prep Method: 3546

Test	Results	Units	MQL	DF	Date/Time Analyzed	By	Analytical Batch
Aldrin	<24.6	µg/Kg	24.6	10	12/20/19 02:27	VIC	L469972
Chlordane	<246	µg/Kg	246	10	12/20/19 02:27	VIC	L469972
4,4'-DDD	<24.6	µg/Kg	24.6	10	12/20/19 02:27	VIC	L469972
4,4'-DDE	<24.6	µg/Kg	24.6	10	12/20/19 02:27	VIC	L469972
4,4'-DDT	<24.6	µg/Kg	24.6	10	12/20/19 02:27	VIC	L469972
Dieldrin	<246	µg/Kg	246	100	12/20/19 02:47	VIC	L469972
gamma-BHC	<24.6	µg/Kg	24.6	10	12/20/19 02:27	VIC	L469972
Heptachlor	<24.6	µg/Kg	24.6	10	12/20/19 02:27	VIC	L469972
Toxaphene	<2460	µg/Kg	2460	10	12/20/19 02:27	VIC	L469972
Surrogate: Decachlorobiphenyl	59.3		Limits: 37-165%	10	12/20/19 02:27	VIC	L469972
Surrogate: Tetrachloro-m-xylene	52.8		Limits: 18-158%	10	12/20/19 02:27	VIC	L469972

Analytical Method: 8260B **Prep Batch(es):** L470003 12/20/19 08:22
Prep Method: 5030A

Test	Results	Units	MQL	DF	Date/Time Analyzed	By	Analytical Batch
Trichloroethene	<8.62	µg/Kg	8.62	1	12/20/19 16:05	ELM	L470004
Surrogate: 4-Bromofluorobenzene	91.2		Limits: 60-130%	1	12/20/19 16:05	ELM	L470004
Surrogate: 1,2-Dichloroethane - d4	108		Limits: 60-132%	1	12/20/19 16:05	ELM	L470004
Surrogate: Toluene-d8	89.1		Limits: 70-130%	1	12/20/19 16:05	ELM	L470004

Qualifiers/ Definitions

DF Dilution Factor
Q RPD >40% dual column results
MQL Method Quantitation Limit

Waypoint ANALYTICAL

7621 Whitepine Road, Richmond, VA 23237
Main 804-743-9401 ° Fax 804-271-6446
www.waypointanalytical.com

70800
Harrisonburg Rockingham Reg Sewer Authority
Anita Riggleman
856 North River Road
Mt Crawford , VA 22841

Project Information : DB121119

Report Date : 12/23/2019
Received : 12/16/2019

Pauric McGroary
Agronomist

Report Number : **19-350-0006**

REPORT OF ANALYSIS

Lab No : **69906**
Sample ID : **DB121119**

Matrix: **Solids**
Sampled: **12/11/2019 9:25**

Analytical Method: 8270D **Prep Batch(es):** **L469282** 12/17/19 15:00
Prep Method: 3546

Test	Results	Units	MQL	DF	Date/Time Analyzed	By	Analytical Batch
Benzo(a)pyrene	<4550	µg/Kg	4550	5	12/19/19 01:09	BGV	L469735
Hexachlorobenzene	<11600	µg/Kg	11600	5	12/19/19 01:09	BGV	L469735
Hexachlorobutadiene	<11600	µg/Kg	11600	5	12/19/19 01:09	BGV	L469735
N-Nitrosodimethylamine	<11600	µg/Kg	11600	5	12/19/19 01:09	BGV	L469735
Surrogate: 2-Fluorophenol	42.0		Limits: 10-85%	5	12/19/19 01:09	BGV	L469735
Surrogate: Nitrobenzene-d5	37.4		Limits: 22-120%	5	12/19/19 01:09	BGV	L469735
Surrogate: 4-Terphenyl-d14	57.6		Limits: 22-120%	5	12/19/19 01:09	BGV	L469735

Qualifiers/ Definitions

DF	Dilution Factor	MQL	Method Quantitation Limit
Q	RPD >40% dual column results		

Harrisonburg-Rockingham Regional Sewer Authority
K-S Biosolids drying System D0571

Komline-Sanderson
12 Holland Av Peapack, NJ 07977-0257
908-234-1000 Fax: 908-234-0487
www.komline.com

Operators Log Sheet

Date: 10-1-19 Operator:

Time	DRYER FEED HOPPER H-1					DRYER - DRY-01									Discharge and Cooling Conveyors						
	Silo level	Feed Pump PCP-1		Feed Pump PCP-2		Motor		Dry Bed Temperatures				Dryer Exhaust		Weir	RV-1	CV-1	CV-2	CV-3	Water	Product	RV-2
	LT-2111	Speed 0-100%	Pressure PIT-2106	Speed 0-100%	Pressure PIT-2105	Speed &	Amps	Bed 1 TE-3002	Bed 2 TE-3005	Bed 3 TE-3006	Bed 4 TE-3007	TT-5000	PIT-3003	Level	Speed 0-100%	Speed 0-100%	Speed 0-100%	Speed 0-100%	Flow FI-4001	Temp TT-4009	Speed 0-100%
	%	HZ%	PSIG	HZ%	PSIG	HZ%	Amps	°F	°F	°F	°F	°F	In. WC	In.	HZ%	HZ%	HZ%	%	GPM	°F	HZ%
1906	7.4	17	77.8	70	23.4	60	64	200	211	240	265	212	-2.7	9.0	12	30	45			86	60
2112	7.2	17	86.1	0	20.8	60	69	202	211	245	259	212	-2.5	9.0	12	30	45			86	60
2304	7.2	17	89.3	0	19.4	60	63	200	211	248	263	211	-2.6	9.0	12	30	45			84	60

Harrisonburg-Rockingham Regional Sewer Authority

K-S Biosolids drying System D0571

Komline-Sanderson
12 Holland Av Peapack, NJ 07977-0257
908-234-1000 Fax 908-234-9487
www.komline.com

Operators Log Sheet

Date: 10-2-19 Operator: MS/TM

Time	DRYER FEED HOPPER H-1					DRYER - DRY-01									Discharge and Cooling Conveyors						
	Silo level	Feed Pump PCP-1		Feed Pump PCP-2		Motor		Dry Bed Temperatures				Dryer Exhaust		Weir Level	RV-1	CV-1	CV-2	CV-3	Water	Product	RV-2
	LT-2111	Speed 0-100%	Pressure PIT-2106	Speed 0-100%	Pressure PIT-2105	Speed &	Amps	Bed 1 TE-3002	Bed 2 TE-3005	Bed 3 TE-3006	Bed 4 TE-3007	TT-5000	PIT-3003		Speed	Speed	Speed	Speed	Flow	Temp	Speed
	%	H2%	PSIG	%	PSIG	%	Amps	°F	°F	°F	°F	°F	In. WC	in.	0-100%	0-100%	0-100%	0-100%	FI-4001	TT-4009	~~0-100%~~ H2
1:04	7.2	17	93.9	0	16.9	60	64	192	211	246	264	210	-2.5	9.0	% 12	% 30	% 45	%	GPM 90	°F 80	% 60
3:02	7.2	17	91.9	0	15.8	60	72	200	210	234	261	210	-2.4	9.0	12	30	45		90	79	60
5:06	7.3	17	89.8	0	13.8	60	74	197	210	236	256	210	-2.63	9.0	12	30	45		90	78	60
7:00	7.3	17	87.4	0	13.2	60	71	196	210	220	251	210	-2.42	9.0	12	30	45			77	60
9:00	7.4	20	90.3	0	12.1	60	69	189	211	217	242	210	-2.23	9.0	12	30	45	N/A			
10:00	7.7	25	90.0	—	11.65	60	65	185	210.8	218	236.8	210	-1.85	10.0	12	30	45			80	60
11:00	7.7	28	78.0	—	12.15	60	58	189	211	218	229	210	-1.90	10.0	12	30	45	—	90	83	60
1300	7.8	28	82.0	—	12.10	60	59	202	211	222	244	211	-1.90	10.0	12	30	45		90	91	60
1505	7.5	28	84.3		15.70	60	62	191	211	241	286	211	-1.80	10.0	12	30	45		90	92	60
1711	8.1	29	90.0	-	23.0	60	60	195	211	223	284	211	-1.40	10.0	12	30	45	-	90	97	60
1905	8.4	29	88.7	-	26.3	60	58	207	211	218	261	211	-1.07	10.0	12	30	45	-	90	99	60
2119	7.9	29	77.8	-	24.6	60	59	200	211	226	284	211	-2.00	10.0	12	30	45	-	90	95	60
2313	7.9	29	79.4	-	21.3	61	59	191	210	219	281	212	-1.93	10.0	12	30	45	-	90	94	60

Harrisonburg-Rockingham Regional Sewer Authority

K-S Biosolids drying System D0571

Komline-Sanderson
12 Holland Av Peapack, NJ 07977-0257
908-234-1000 Fax: 908-234-9487
www.komline.com

Operators Log Sheet

Date: 10-3-19 Operator:

Time	DRYER FEED HOPPER H-1					DRYER - DRY-01									Discharge and Cooling Conveyors						
	Silo level	Feed Pump PCP-1		Feed Pump PCP-2		Motor		Dry Bed Temperatures				Dryer Exhaust		Weir Level	RV-1	CV-1	CV-2	CV-3	Water	Product	RV-2
	LT-2111	Speed 0-100%	Pressure PIT-2106	Speed 0-100%	Pressure PIT-2105	Speed &	Amps	Bed 1 TE-3002	Bed 2 TE-3005	Bed 3 TE-3006	Bed 4 TE-3007	TT-5000	PIT-3003		Speed 0-100%	Speed 0-100%	Speed 0-100%	Speed 0-100%	Flow FI-4001	Temp TT-4009	Speed 0-100%
	%	%	PSIG	%	PSIG	%	Amps	°F	°F	°F	°F	°F	in. WC	in.	%	%	%	%	GPM	°F	%
1:00	8.0	29	79.5	0	20.1	60	57	190	210	216	260	211	-1.96	10.0	12	30	45		90	92.9	60
3:02	8.1	29	82.9	0	17.6	60	56	189	210	214	240	211	-2.00	10.0	12	30	45		90	90.7	60
5:00	8.3	29	83.5	0	16.6	60	57	193	210	215	241	211	-1.87	10.0	12	30	45		90	89.4	60
6:50	8.6	29	83.3	0	15.4	60	60	189	210	216	254	211	-2.14	10.0	12	30	45		90	88.3	60
800	7.0	29	81.5	0	15.0	60	60	189	210	217	265	211	-2.05	10.0	12	30	45		90	83.1	60
900	6.6	29	81.6	0	14.4	60	60	191	210	217	269	211	-1.99	10.0	12	30	45		90	81.8	60
1000	6.5	28	82.0	0	14.3	60	60	193	211	217	270	211	-2.09	10.0	12	30	45		90	83.3	60
1100	6.3	28	87.3	0	13.4	60	60	188	210	216	248	212	-2.10	10.0	12	30	45		90	87.5	60
1200	6.5	24	88.9	0	13.2	60	60	193	211	217	272	212	-2.11	10.0	12	30	45		90	89.3	60
1300	7.1	24	88.0	0	14.0	60	60	203	210	265	305	212	-2.19	9.8	12	30	45		90	92.1	60
1400	6.7	26	88.0	0	14.2	60	60	186	211	277	305	212	-2.23	9.8	12	30	45		90	92.9	60
1500	6.9	26	89.9	0	14.7	60	60	192	210	281	308	212	-2.26	9.8	12	30	45		90	93.4	60
1701	7.1	26	92.6	0	15.7	60	72	190	210	213	230	211	-2.22	9.8	12	30	45		90	99.7	60
1915	7.2	25	93.4	0	18.1	60	57	206	211	220	228	212	-2.01	9.8	12	30	45		90	96.5	60
2106	7.2	26	92.9	0	19.3	60	55	207	211	264	295	212	-2.16	9.8	12	30	45		90	90.6	60
2324	7.1	26	94.5	0	20.2	60	56	194	211	283	312	212	-2.32	9.8	12	30	45		90	89.6	60

Harrisonburg-Rockingham Regional Sewer Authority

K-S Biosolids drying System D0571

Komline-Sanderson
12 Holland Av Peapack, NJ 07977-0257
908-234-1000 Fax 908-234-9487
www.komline.com

Operators Log Sheet

Date: 10-4-19 Operator:

Time	DRYER FEED HOPPER H-1					DRYER - DRY-01									Discharge and Cooling Conveyors						
	Silo level	Feed Pump PCP-1		Feed Pump PCP-2		Motor		Dry Bed Temperatures				Dryer Exhaust		Weir Level	RV-1	CV-1	CV-2	CV-3	Water	Product	RV-2
	LT-2111	Speed 0-100%	Pressure PIT-2106	Speed 0-100%	Pressure PIT-2105	Speed &	Amps	Bed 1 TE-3002	Bed 2 TE-3005	Bed 3 TE-3006	Bed 4 TE-3007	TT-5000	PIT-3003		Speed 0-100%	Speed 0-100%	Speed 0-100%	Speed 0-100%	Flow FI-4801	Temp TT-4009	Speed 0-100%
	%	%	PSIG	%	PSIG	%	Amps	°F	°F	°F	°F	°F	in. WC	in.	%	%	%	%	GPM	°F	%
1:05	7.2	26	96.7	0	16.6	60	58	192	210	221	289	212	-1.70	9.8	12	30	45		90	86.9	60
3:03	23	26	98.5	0	12.0	59	60	191	210	214	253	211	-1.84	9.8	12	30	45		90	86.3	60
1648	7.4	27	84.8	0	7.8	55	60	196	225	300	298	215	-2.02	10.0	12	30	45		90	82.4	60
1755	7.9	24	84.3	0	8.4	60	56	190	212	312	311	218	-2.17	9.5	12	30	45		90	81.5	60
1857	7.8	28	88.4	0	8.6	60	55	200	212	317	317	216	-1.73	8.8	12	30	45		90	80.4	60
1954	7.6	28	98.7	0	8.7	60	56	191	211	287	316	214	-1.34	9.0	12	30	45		90	80.8	60
2119	8.5	0	40.1	0	8.7	60	65	210	211	290	283	214	-2.07	9.1	12	30	45		90	81.7	60
2248	8.7	29	99.6	0	9.3	60	54	199	212	312	313	214	-1.57	9.1	12	30	45		90	80.0	60
2321	8.3	29	96.4	0	9.5	60	57	203	212	321	322	214	-1.57	9.1	12	30	45		90	77.7	60

Harrisonburg-Rockingham Regional Sewer Authority
K-S Biosolids drying System D0571

Komline-Sanderson
12 Holland Av Peapack, NJ 07977-0257
908-234-1000 Fax 908-234-9487
www.komline.com

Operators Log Sheet

Date: 10-5-19 Operator:

Time	DRYER FEED HOPPER H-1					DRYER - DRY-01									Discharge and Cooling Conveyors						
	Silo level	Feed Pump PCP-1		Feed Pump PCP-2		Motor		Dry Bed Temperatures				Dryer Exhaust		Weir Level	RV-1	CV-1	CV-2	CV-3	Water	Product	RV-2
	LT-2111	Speed 0-100%	Pressure PIT-2106	Speed 0-100%	Pressure PIT-2105	Speed &	Amps	Bed 1 TE-3002	Bed 2 TE-3005	Bed 3 TE-3006	Bed 4 TE-3007	TT-5000	PIT-3003		Speed 0-100%	Speed 0-100%	Speed 0-100%	Speed 0-100%	Flow FI-4001	Temp TT-4009	Speed 0-100%
	%	%	PSIG	%	PSIG	Hz	Amps	°F	°F	°F	°F	°F	in. WC	in.	%	%	%	%	GPM	°F	Hz%
0917	8.3	29	102	—	—	0	60	201	211	278	319	213	-1.1	9.1	12	30	45	—		79	60
931	7.87	16	94	—	—	60	50	209	284	298	295	228	-2.4	10.0	12	30	45	—	90	74	60
1044	7.0	17	95	—	—	60	52	206	240	272	288	222	-1.5	10.0	12	30	45	—	90	74	60
1126	7.7	20	95	—	—	60	58	199	258	290	292	219	-1.9	9.2	12	30	45	—	90	72	60
1220	7.6	22	96	—	—	60	57	188	218	301	300	216	-1.4	8.9	12	30	45	—		72	60
1322	7.8	22	96	—	—	60	58	192	212	301	302	216	-0.8	9.0	12	30	45	—		73	60
1438	8.0	22	99	—	—	60	62	185	212	296	299	215	0.7	9.4							

Harrisonburg-Rockingham Regional Sewer Authority

K-S Biosolids drying System D0571

Komline-Sanderson
12 Holland Av Peapack, NJ 07977-0257
908-234-1000 Fax 908-234-0487
www.komline.com

Operators Log Sheet

Date: 10-7-19 Operator: JC / BM

Time	DRYER FEED HOPPER H-1					DRYER - DRY-01									Discharge and Cooling Conveyors						
	Silo level	Feed Pump PCP-1		Feed Pump PCP-2		Motor		Dry Bed Temperatures				Dryer Exhaust		Weir Level	RV-1	CV-1	CV-2	CV-3	Water	Product	RV-2
	LT-2111	Speed 0-100%	Pressure PIT-2106	Speed 0-100%	Pressure PIT-2105	Speed &	Amps	Bed 1 TE-3002	Bed 2 TE-3005	Bed 3 TE-3006	Bed 4 TE-3007	TT-5000	PIT-3C03		Speed 0-100%	Speed 0-100%	Speed 0-100%	Speed 0-100%	Flow FI-4001	Temp TT-4009	Speed 0-100%
	%	%	PSIG	%	PSIG	%	Amps	°F	°F	°F	°F	°F	in. WC	in.	%	%	%	%	GPM	°F	%
~~1800~~ 1600	8.0	21	96	—	—	60	61	195	212	284	295	216	-2.5	10.0	12	30	45	—	90	76	60
1815	7.7	23	94	—	—	60	59	198	212	305	303	217	-1.7	10.4	12	30	45	—	90	77	60
1907	7.8	23	91	—	—	60	62	199	212	309	307	215	-2.9	10.1	12	30	45	—	90	76	60
2000	8.2	24	90	—	—	60	61	196	211	308	307	214	-3.0	10.0	12	30	45	—	90	75	60
2100	7.9	24	91	—	—	60	61	190	211	276	310	213	-2.6	10.0	12	30	45	—	90	73	60
2200	8.1	24	93	—	—	60	60	195	211	250	295	212	-2.8	10.0	12	30	45	—	90	75	60
2300	8.1	24	93	—	—	60	65	186	211	241	286	212	-2.7	10.0	12	30	45		90	75	60

1

Harrisonburg-Rockingham Regional Sewer Authority
K-S Biosolids drying System D0571

Komline-Sanderson
12 Holland Av Peapack, NJ 07977-0257
908-234-1000 Fax 908-234-8487
www.komline.com

Operators Log Sheet

Date: 10-8-19 Operator: 12-8 Gem / 8-4 JCLEES / 4-12 BM

Time	DRYER FEED HOPPER H-1					DRYER - DRY-01									Discharge and Cooling Conveyors						
	Silo level	Feed Pump PCP-1		Feed Pump PCP-2		Motor		Dry Bed Temperatures				Dryer Exhaust		Weir Level	RV-1	CV-1	CV-2	CV-3	Water	Product	RV-2
	LT-2111	Speed 0-100%	Pressure PIT-2106	Speed 0-100%	Pressure PIT-2105	Speed &	Amps	Bed 1 TE-3002	Bed 2 TE-3005	Bed 3 TE-3006	Bed 4 TE-3007	TT-5000	PIT-3003		Speed 0-100%	Speed 0-100%	Speed 0-100%	Speed 0-100%	Flow FI-4001	Temp TT-4009	Speed 0-100%
	%	%	PSIG	%	PSIG	%	Amps	°F	°F	°F	°F	°F	in. WC	in.	%	%	%	%	GPM	°F	%
0025	8.1	24 40	91	–	–	60	64	192	211	224	275	212	-2.8	10	12	30	45	–	90	75	60
115	8.3	24	92	–	–	60	65	190	211	217	262	211	-2.5	10	13	30	45	–	90	74	60
230	8.2	24	93	–	–	60	64	189	211	215	242	211	-2.7	10	13	30	45	–	90	73	60
324	8.4	24	95	–	–	60	64	179	211	215	232	211	-2.6	10.3	13	30	45	–	90	74	60
458	8.0	24	96	–	–	60	62	187	211	215	230	211	-2.7	10.3	13	30	45	–	90	75	60
600	8.2	24	95	–	–	60	62	190	211	215	231	210	-2.8	10.3	13	30	45	–	90	74	60
722	8.3	24	97	–	–	60	59	189	211	215	234	210	-2.7	10.3	13	30	45	–	90	74	60
824	8.1	24	100	–	–	60	60	193	211	215	236	210	-2.5	10.3	13	30	45	–	90	74	60
925	8.1	24	103	–	–	60	58	186	211	216	243	210	-2.3	10.3	12	30	45	–	90	79	60
1022	8.0	24	105	–	–	60	59	194	211	216	247	210	-2.6	10.3	13	30	45	–	90	79	60
1133	8.1	24	106	–	–	60	63	187	210	217	252	210	-2.5	10.1	13	30	45	–	90	80	60
1264	7.8	24	104	–	–	60	62	189	211	215	244	210	-3.0	9.9	12	30	45	–	90	79	60
1347	8.0	24	108	–	–	60	60	192	211	214	240	210	-2.5	9.9	12	30	45	–	90	79	60
1443	7.8	24	109	–	–	60	64	192	211	215	239	210	-2.6	10.3	13	30	45	–	90	79	60
1540	8.1	24	111	–	–	60	64	171	211	216	243	210	-2.6	10.3	12	30	45	–	90	78	60
1635	7.9	24	113	–	–	60	59	184	211	217	248	210	-2.5	10.3	12	30	45	–	90	78	60
1733	7.1	24	112	–	–	60	60	190	211	216	251	210	-2.5	9.7	12	30	45	–	90	77	60
1854	7.4	24	107	–	–	60	64	192	211	215	243	210	-2.7	9.5	12	30	45	–	90	79	60
2006	7.6	24	107	–	–	60	62	190	211	215	241	210	-2.6	9.7	13	30	45	–	90	79	60
2108	7.6	24	106	–	–	60	59	180	211	215	244	210	-2.6	9.7	12	30	45	–	90	78	60
2205	7.7	24	103	–	–	60	59	183	211	215	244	210	-2.5	9.7	13	30	45	–	90	78	60
2306	7.9	24	103	–	–	60	62	181	211	215	245	210	-2.4	9.7	13	30	45	–	90	77	60

Harrisonburg-Rockingham Regional Sewer Authority

K-S Biosolids drying System D0571

Komline-Sanderson
12 Holland Av Peapack, NJ 07977-0257
908-234-1000 Fax 908-234-9487
www.komline.com

Operators Log Sheet

Date: 10/9/19 Operator: 12-8 EBM / 8-4 BRGIMS / 4-12 BK

Time	Dryer Feed Hopper H-1					DRYER - DRY-01									Discharge and Cooling Conveyors						
	Silo level	Feed Pump PCP-1		Feed Pump PCP-2		Motor		Dry Bed Temperatures				Dryer Exhaust		Weir Level	RV-1	CV-1	CV-2	CV-3	Water	Product	RV-2
	LT-2111	Speed 0-100%	Pressure PIT-2106	Speed 0-100%	Pressure PIT-2105	Speed &	Amps	Bed 1 TE-3002	Bed 2 TE-3005	Bed 3 TE-3006	Bed 4 TE-3007	TT-5000	PIT-3003		Speed 0-100%	Speed 0-100%	Speed 0-100%	Speed 0-100%	Flow FI-4001	Temp TT-4009	Speed 0-100%
	%	%	PSIG	%	PSIG	%	Amps	°F	°F	°F	°F	°F	in. WC	in.	%	%	%	%	GPM	°F	%
1211	7.9	24	102	–	–	60	63	187	211	215	243	210	-2.4	9.7	12	30	45	–	90	78	60
142	7.7	24	102	–	–	60	62	184	211	214	242	210	-3.1	9.8	12	30	45	–	90	78	60
309	7.7	24	97	–	–	60	63	182	211	215	242	210	-2.5	9.9	13	30	45	–	90	78	60
511	7.8	24	97	–	–	60	64	182	211	215	242	210	-2.9	10.1	13	30	45	–	90	78	60
601	7.9	24	99	–	–	60	63	176	211	215	241	210	-2.5	10.2	13	30	45	–	90	78	60
713	8.0	24	100	–	–	60	63	179	211	215	241	210	-2.4	10.4	13	30	45	–	90	78	60
821	7.9	24	100	–	–	60	58	174	211	215	245	210	-2.2	10.4	13	30	45	–	90	76	60
928	7.9	24	100	–	–	60	65	188	211	216	250	210	-2.3	10.4	12	30	45	–	90	74	60
1032	8.0	24	99	–	–	60	59	182	211	215	247	210	-2.4	10.2	12	30	45	–	90	76	60
1138	8.2	24	101	–	–	60	60	185	211	214	244	210	-2.4	10.2	13	30	45	–	90	76	60
1252	8.0	24	99	–	–	60	61	176	211	215	242	210	-2.6	10.3	13	30	45	–	90	76	60
1426	7.9	24	97	–	–	60	60	183	211	216	245	210	-2.7	10.5	13	30	45	–	90	77	60
1530	8.1	24	103	–	–	60	64	178	211	216	251	210	-2.6	10.1"	13	30	45	–	90	77	60
1633	7.9	24	106	–	–	60	62	181	211	215	249	210	-2.5	9.9	13	30	45	–	90	77	60
1730	7.9	24	109	–	–	60	60	187	211	215	246	210	-2.4	9.9	12	30	45	–	90	78	60
1829	8.2	24	109	–	–	60	61	183	211	214	246	210	-2.4	9.9	13	30	45	–	90	78	60
1925	7.9	24	106	–	–	60	60	177	211	215	246	210	-2.4	9.9	13	30	45	–	90	77	60
2030	7.7	24	108	–	–	60	62	178	211	215	249	210	-2.7	9.9	13	30	45	–	90	77	60
2135	7.7	24	110	–	–	60	60	181	211	215	250	210	-2.5	9.7	12	30	45	–	90	78	60
2226	7.7	24	109	–	–	60	60	187	211	215	249	210	-2.4	9.5	13	30	45	–	90	78	60
2331	7.6	24	108	–	–	60	60	190	211	215	248	210	-2.6	9.5	13	30	45	–	90	78	60

Harrisonburg-Rockingham Regional Sewer Authority

K-S Biosolids drying System D0571

Komline-Sanderson
12 Holland Av Peapack, NJ 07977-0257
908-234-1000 Fax 908-234-9487
www.komline.com

Operators Log Sheet

Date: 10/10/19 Operator: 12-8 Sam / 8-4 RS / 4-12 TM

Time	DRYER FEED HOPPER H-1					DRYER - DRY-01									Discharge and Cooling Conveyors						
	Silo level	Feed Pump PCP-1		Feed Pump PCP-2		Motor		Dry Bed Temperatures				Dryer Exhaust		Weir	RV-1	CV-1	CV-2	CV-3	Water	Product	RV-2
	LT-2111	Speed 0-100%	Pressure PIT-2106	Speed 0-100%	Pressure PIT-2105	Speed &	Amps	Bed 1 TE-3002	Bed 2 TE-3005	Bed 3 TE-3006	Bed 4 TE-3007	TT-5000	PIT-3003	Level	Speed 0-100%	Speed 0-100%	Speed 0-100%	Speed 0-100%	Flow FI-4001	Temp TT-4009	Speed 0-100%
	%	%	PSIG	%	PSIG	%	Amps	°F	°F	°F	°F	°F	in. WC	in.	%	%	%	%	GPM	°F	%
0042	7.7	24	104	–	–	60	59	185	210	215	250	210	-2.6	9.3	13	30	45	–	90	77	60
152	7.5	24	99	–	–	60	62	186	211	215	248	210	-2.3	9.3	13	30	45	–	90	78	60
315	7.6	24	98	–	–	60	61	186	211	214	246	210	-2.3	9.3	13	30	45	–	90	79	60
413	7.8	24	100	–	–	60	60	183	211	214	245	210	-2.2	9.3	13	30	45	–	90	79	60
514	7.8	24	101	–	–	60	59	185	211	214	245	210	-2.7	9.3	13	30	45	–	90	80	60
605	7.9	24	102	–	–	60	60	191	211	214	245	211	-2.2	9.3	12	30	45	–	90	80	60
712	8.0	24	108	–	–	60	58	187	211	214	245	211	-2.4	9.3	13	30	45	–	90	79	60
849	8.0	24	111	–	–	60	60	186	211	214	250	210	-2.6	9.1	13	30	45	–	90	80	60
940	8.0	24	107	–	–	60	60	186	211	214	248	210	-2.2	8.9	13	30	45	–	90	79	60
1040	8.0	24	98	–	–	60	60	186	211	214	247	211	-2.2	8.9	13	30	45	–	90	79	60
1135	7.7	24	95	–	–	60	60	191	211	214	245	211	-2.2	8.9	13	30	45	–	90	78	60
1250	7.6	24	96	–	–	60	60	187	211	213	242	210	-2.0	8.9	13	30	45	–	90	76	60
1346	8.0	22	97	–	–	60	60	189	211	215	244	211	-2.5	8.9	13	30	45	–	90	78	60
1440	8.0	22	101	–	–	60	60	190	211	225	254	211	-2.3	8.5	12	30	45	–	90	77	60
1540	7.9	24	105	–	–	60	60	191	211	225	257	211	-2.3	7.9	13	30	45	–	90	78	60
1635	7.9	24	114	–	–	60	60	200.7	211	216	243	211	-2.2	7.9	13	30	45	–	90	80	60
1725	8.0	24	108	–	–	60	55	198	211	219	247	211	-2.6	8.2	13	30	45	–	90	82	60
1825	8.0	24	102	–	–	60	56	199	211	225	249	211	-2.5	8.2	13	30	45	–	90	81	60
1920	7.9	24	100	–	–	60	54	198	211	221	248	211	-2.4	8.0	13	30	45	–	90	80	60
2029	7.7	24	98	–	–	60	57	194	211	215	239	211	-2.6	8.2	13	30	45	–	90	81	60
2122	7.8	24	95	–	–	60	58	191	211	217	241	211	-2.4	8.5	13	30	45	–	90	81	60
2234	7.8	24	94	–	–	60	58	200	211	216	244	211	-2.2	8.5	13	30	45	–	90	80	60
2324	8.1	24	92	–	–	60	58	199	211	216	243	211	-2.1	8.5	13	30	45	–	90	79	60

Harrisonburg-Rockingham Regional Sewer Authority

K-S Biosolids drying System D0571

Komline-Sanderson
12 Holland Av Peapack, NJ 07977-0257
908-234-1000 Fax 908-234-9487
www.komline.com

Operators Log Sheet

Date: 10-11-19 Operator: 12-8 / 8-4 / 4-12 Ekem / [illegible]

Time	DRYER FEED HOPPER H-1					DRYER - DRY-01									Discharge and Cooling Conveyors						
	Silo level	Feed Pump PCP-1		Feed Pump PCP-2		Motor		Dry Bed Temperatures				Dryer Exhaust		Weir Level	RV-1	CV-1	CV-2	CV-3	Water	Product	RV-2
	LT-2111	Speed 0-100%	Pressure PIT-2106	Speed 0-100%	Pressure PIT-2105	Speed &	Amps	Bed 1 TE-3002	Bed 2 TE-3005	Bed 3 TE-3006	Bed 4 TE-3007	TT-5000	PIT-3003		Speed	Speed	Speed	Speed	Flow	Temp	Speed
	%	%	PSIG	%	PSIG	%	Amps	°F	°F	°F	°F	°F	In. WC	in.	0-100%	0-100%	0-100%	0-100%	FI-4001	TT-4009	0-100%
1247	8.0	24	92	–	–	60	57	196	211	215	242	211	-2.3	8.7	13	30	45	–	[illegible]	79	40
200	8.0	24	91	–	–	60	56	194	211	214	243	211	-2.1	8.8	12	30	45	–	[illegible]	79	60
313	7.9	24	93	–	–	60	58	199	211	213	243	211	-2.2	8.8	12	30	45	–	[illegible]	79	60
408	7.8	24	94	–	–	60	55	198	211	213	241	211	-2.0	8.9	13	30	45	–	[illegible]	79	60
525	7.9	24	95	–	–	60	59	193	211	214	247	211	-2.1	9.2	13	30	45	–	[illegible]	79	60
620	7.9	22	95	–	–	60	58	194	211	217	252	211	-2.1	9.0	13	30	45	–	[illegible]	79	60
721	8.0	22	95	–	–	60	59	196	211	223	261	211	-2.2	9.0	13	30	45	–	[illegible]	79	60
835	8.5	22	96	–	–	60	59	193	210	233	270	211	-2.5	8.9	13	30	45	–	[illegible]	78	60
930	8.5	24	99	–	–	60	57	189	210	224	272	211	-2.5	8.8	13	30	45	–	[illegible]	79	60
1037	8.5	24	99	–	–	60	59	193	210	213	260	211	-2.2	9.0	13	30	45	–	[illegible]	79	60
1149	8.7	24	101	–	–	60	60	186	210	212	245	210	-2.3	9.2	13	30	45	–	[illegible]	79	60
1247	8.4	24	100	–	–	60	59	197	210	213	240	211	-2.1	9.3	13	30	45	–	[illegible]	79	60
1336	8.5	24	103	–	–	60	59	187	210	213	235	210	-2.4	9.6	13	30	45	–	[illegible]	77	60
1530	8.6	26	102	–	–	60	58	184	210	213	229	211	-2.7	10.5	13	30	45	–	[illegible]	78	60
1617	8.5	25	100	–	–	60	61	182	211	213	229	211	-2.3	10.7	13	30	45	–	[illegible]	79	60
1728	8.4	25	90	–	–	60	59	184	211	215	231	211	-2.5	10.7	13	30	45	–	[illegible]	80	60
1826	8.3	24	90	–	–	60	60	186	211	215	235	211	-2.3	10.7	13	30	45	–	[illegible]	80	60
1919	8.3	24	92	–	–	60	60	185	211	215	236	211	-2.5	10.7	13	30	45	–	[illegible]	79	60
2018	8.3	24	92	–	–	60	62	186	211	215	239	211	-2.4	10.8	13	30	45	–	90	78	60
2117	8.5	23	93	–	–	60	58	186	211	215	246	211	-2.6	10.7	13	30	45	–	90	80	60
2224	8.5	23	96	–	–	60	58	185	211	218	256	211	-2.4	10.5	13	30	45	–	90	79	60
23						60	58	193	211	217	261	211	-2.3	10.0	13	30	45	–	90	78	60

Harrisonburg-Rockingham Regional Sewer Authority

K-S Biosolids drying System D0571

Komline-Sanderson
12 Holland Av Peapack, NJ 07977-0257
908-234-1000 Fax 908-234-9487
www.komline.com

Operators Log Sheet

Date: 10-12-19 Operator: M-M / BSS / M-M

Time	DRYER FEED HOPPER H-1					DRYER - DRY-01									Discharge and Cooling Conveyors						
	Silo level	Feed Pump PCP-1		Feed Pump PCP-2		Motor		Dry Bed Temperatures				Dryer Exhaust		Weir Level	RV-1	CV-1	CV-2	CV-3	Water	Product	RV-2
	LT-2111	Speed 0-100%	Pressure PIT-2106	Speed 0-100%	Pressure PIT-2105	Speed &	Amps	Bed 1 TE-3002	Bed 2 TE-3005	Bed 3 TE-3006	Bed 4 TE-3007	TT-5000	PIT-3003		Speed 0-100%	Speed 0-100%	Speed 0-100%	Speed 0-100%	Flow FI-4001	Temp TT-4009	Speed 0-100%
	%	%	PSIG	%	PSIG	%	Amps	°F	°F	°F	°F	°F	in. WC	in.	%	%	%	%	GPM	°F	%
0055	7.2	23	98	0	–	60	61	189	211	215	253	211	-2.2	9.7	13	30	45	–	90	81	60
0155	7.5	23	97	–	–	60	62	192	211	215	251	211	-2.2	9.6	13	30	45	–	90	82	60
0253	7.6	23	95	–	–	60	59	193	211	214	251	210	-2.2	9.3	13	30	45	–	90	82	60
0355	7.6	23	97	–	–	60	62	191	211	214	251	210	-2.5	9.1	12	30	45	–	90	81	60
0458	7.5	23	99	–	–	60	58	195	211	215	252	210	-2.2	9.0	12	30	45	–	90	81	60
0555	7.6	23	100	–	–	60	61	195	211	217	254	210	-2.1	9.0	13	30	45	–	90	81	60
0653	7.7	23	102	–	–	60	59	197	211	217	256	210	-2.3	9.0	13	30	45	–	90	81	60
0750	7.6	24	103	–	–	60	62	196	211	216	256	211	-2.6	9.0	12	30	45	–	90	80	60
0853	7.9	24	103	–	–	60	58	191	211	213	251	211	-2.1	9.1	13	30	45	–	90	80	60
0949	7.9	24	104	–	–	60	60	196	211	213	246	211	-2.1	9.3	13	30	45	–	90	80	60
1121	7.9	24	106	–	–	60	62	195	211	213	240	211	-2.1	9.3	13	30	45	–	90	78	60
1206	80	24	[illegible]	–	–	60	[illegible]	192	211	213	232	211	-2.3	9.5	13	30	45	–	90	79	60
1433	77	24	110	–	–	60	63	184	210	212	[illegible]	211	-2.3	9.5	12	30	45	–	90	78	60
1622	7.6	24	[illegible]	–		[illegible]	62	196	211	214	236	211	-2.4	9.5"	13	30	45	–	90	78	60
1719	7.5	24	101	–	–	60	62	192	211	214	241	211	-2.2	9.5"	12	30	45	–	90	79	60
1822	7.3	24	102	–	–	60	58	194	[illegible]	214	245	211	-2.1	9.5	13	30	45	–	90	79	60
1927	7.4	24	101	–	–	60	60	196	211	214	241	210	-2.4	9.5	12	30	45	–	90	78	60
2031	7.6	24	104	–	–	60	59	190	211	214	250	211	-1.9	9.5"	13	30	45	–	90	79	60
2145	8.2	24	110	–	–	60	57	181	211	214	247	211	-2.1	9.5"	13	30	45	–	90	80	60
2252	7.9	24	112	–	–	60	58	186	211	213	243	211	-1.9	9.5"	13	30	45	–	90	79	60
2331	7.8	24	110	–	–	60	57	193	211	213	242	211	-2.3	9.6"	13	30	45	–	90	80	60

Harrisonburg-Rockingham Regional Sewer Authority

K-S Biosolids drying System D0571

Komline-Sanderson
12 Holland Av Peapack, NJ 07977-0257
908-234-1000 Fax 908-234-9487
www.komline.com

Operators Log Sheet

Date: [illegible] Operator: [illegible]

Time	DRYER FEED HOPPER H-1					DRYER - DRY-01									Discharge and Cooling Conveyors						
	Silo level	Feed Pump PCP-1		Feed Pump PCP-2		Motor		Dry Bed Temperatures				Dryer Exhaust		Weir	RV-1	CV-1	CV-2	CV-3	Water	Product	RV-2
	LT-2111	Speed 0-100%	Pressure PIT-2106	Speed 0-100%	Pressure PIT-2105	Speed &	Amps	Bed 1 TE-3002	Bed 2 TE-3005	Bed 3 TE-3006	Bed 4 TE-3007	TT-5000	PIT-3003	Level	Speed 0-100%	Speed 0-100%	Speed 0-100%	Speed 0-100%	Flow FI-4001	Temp TT-4009	Speed 0-100%
	%	%	PSIG	%	PSIG	%	Amps	°F	°F	°F	°F	°F	in. WC	in.	%	%	%	%	GPM	°F	%
0104	7.8	24	106	–	–	60	61	188	211	214	247	211	-1.8	9.0	12	30	45	–	90	81	60
0200	7.8	24	104	–	–	60	57	187	211	214	249	211	-1.9	9.0	13	30	45	–	90	80	60
0301	7.7	24	103	–	–	60	56	191	211	213	250	211	-1.9	9.0	13	30	45	–	90	80	60
0400	7.6	24	103	–	–	60	58	191	211	213	248	211	-1.8	9.0	13	30	45	–	90	80	60
0456	7.5	24	104	–	–	60	61	193	211	213	245	211	-1.5	9.0	13	30	45	–	90	80	60
0559	7.4	24	108	–	–	60	60	187	211	213	244	211	-1.7	9.0	13	30	45	–	90	80	60
0700	7.6	24	111	–	–	60	59	189	211	214	246	211	-2.0	9.0	13	30	45	–	90	80	60
0800	7.5	24	116	–	–	60	57	183	211	214	248	211	-1.7	9.0	12	30	45	–	90	80	60
0902	7.7	24	116	–	–	60	57	190	211	215	251	211	-1.5	9.0	13	30	45	–	90	80	60
1030	7.7	24	118	–	–	60	57	191	211	214	253	211	-1.7	9.0	12	30	45	–	90	79	60
1120	7.9	24	116	–	–	60	58	188	211	214	252	211	-2.2	9.0	13	30	45	–	90	79	60
1255	7.8	24	111	–	–	60	63	189	211	213	251	211	-1.6	9.0"	13	30	45	–	90	79	60
1439	7.6	24	106	–	–	60	59	182	211	213	245	211	-2.5	9.0"	13	30	45	–	90	79	60
1547	7.7	24	104	–	–	60	56	192	211	213	242	211	-1.8	9.1"	13	30	45	–	90	79	60
1647	7.5	24	105	–	–	60	57	197	211	214	243	211	-1.9	9.1"	13	30	45	–	90	79	60
1735	7.5	24	105	–	–	60	57	197	211	212	243	211	-1.8	9.1"	12	30	45	–	90	79	60
1852	7.5	24	109	–	–	60	60	194	211	213	244	211	-2.0	9.1"	12	30	45	–	90	79	60
1959	7.7	24	111	–	–	60	61	188	211	213	245	211	-1.8	9.1"	13	30	45	–	90	79	60
2044	8.0	24	113	–	–	60	58	194	211	213	246	211	-1.6	9.1"	12	30	45	–	90	78	60
2142	7.8	24	120	–	–	60	56	202	211	214	250	211	-1.6	9.0"	13	30	45	–	90	80	60
2240	8.4	24	121	–	–	60	61	198	211	229	254	211	-1.7	10.0"	13	30	45	–	90	80	60
2342	8.4	24	123	–	–	60	56	191	211	252	275	211	-1.7	8.7"	13	30	45	–	90	79	60

Harrisonburg-Rockingham Regional Sewer Authority
K-S Biosolids drying System 00571

Operators Log Sheet

Komline-Sanderson
12 Holland Av Peapack, NJ 07977-0257
908-234-1000 Fax: 908-234-0487
www.komline.com

Date: 10-14-19 Operators: 1365 / MB / JC / MS 12-8 / 8-4 / 4-12

Time	DRYER FEED HOPPER H-1					DRYER - DRY-01									Discharge and Cooling Conveyors						
	Silo level	Feed Pump PCP-1		Feed Pump PCP-2		Motor		Dry Bed Temperatures				Dryer Exhaust		Weir Level	RV-1	CV-1	CV-2	CV-3	Water	Product	RV-2
	LT-2111	Speed 0-100%	Pressure PIT-2106	Speed 0-100%	Pressure PIT-2105	Speed &	Amps	Bed 1 TE-3002	Bed 2 TE-3005	Bed 3 TE-3006	Bed 4 TE-3007	TT-3000	PIT-3003		Speed 0-100%	Speed 0-100%	Speed 0-100%	Speed 0-100%	Flow FI-4001	Temp TT-4009	Speed 0-100%
	Feet	Hz	PSIG	Hz	PSIG	Hz	Amps	°F	°F	°F	°F	°F	in. WC	in.	Hz	Hz	Hz	%	GPM	°F	Hz
0004	8.2	24	108	–	–	60	56	201	211	252	275	211	-1.6	8.4	13	30	45	~~45~~	90	81	60
0400	8.3	24	107	–	–	60	55	197	211	241	271	211	-2.1	8.4	13	30	45	—	90	82	60
0501	8.2	24	105	–	–	60	57	195	211	231	265	211	-1.7	8.5	13	30	45	–	90	82	60
0600	8.0	24	110	–	–	60	58	199	211	227	261	211	-1.4	8.6	13	30	45	–	90	82	60
0456	8.1	24	107	–	–	60	55	199	211	225	258	211	-1.2	8.6	13	30	45	–	90	81	60
0600	8.2	24	108	–	–	60	55	199	211	221	254	211	-1.3	8.6	12	30	45	–	90	81	60
0654	8.2	24	110	–	–	60	61	196	211	219	250	211	-1.6	8.6	13	30	45	–	90	81	60
0729	8.5	24	110	–	–	60	57	192	211	219	248	211	-1.4	8.6	13	30	45	–	90	81	60
0827	8.1	24	113	–	–	60	55	181	211	216	245	211	-1.6	8.6	13	30	45	–	90	81	60
0926	7.9	22	114	–	–	60	56	188	211	218	246	211	-1.4	9.2	13	30	45	–	90	80	60
1050	8.0	22	112	–	–	60	56	197	210	235	258	211 ~~193~~	-1.3	8.9	13	30	45	–	90	79	60
1148	8.0	22	114	–	–	60	56	197	211	239	263	~~19~~ 211	-1.6	8.9	13	30	45	–	90	77	60
1257	7.7	22	115	–	–	60	57	190	211	236	267	211	-1.4	8.9	13	30	45	–	90	78	60
1359	8.0	22	108	–	–	60	57	193	211	229	269	211	-1.3	8.9	13	30	45	–	90	78	60
1527	7.9	22	97	–	–	60	58	189	211	219	266	211	-1.5	8.9	13	30	45	–	90	79	60
1806	7.8	22	91	–	–	60	56	186	211	214	255	211	-1.4	8.9"	13	30	45	–	90	81	60
1927	7.1	22	98	–	–	60	62	188	211	214	250	211	-1.7	8.9"	12	30	45	–	90	79	60
2158	7.1	22	94	–	–	60	62	185	211	214	245	211	-1.4	8.9"	13	30	45	–	90	79	60
2259	7.1	22	92	–	–	60	57	185	211	214	245	211	-1.7	8.9"	13	30	45	–	90	80	60

Harrisonburg-Rockingham Regional Sewer Authority
K•S Biosolids drying System 00571

Operators Log Sheet

@ Komline-Sanderson
12 Holland Av Peapack, NJ 07977-0257
908-234-1000 Fax: 908-234-9487
www.komline.com

Date: 10-15-19 Operators: BSS 12-8 / SC 8-4 / 4-12 MS

Time	DRYER FEED HOPPER H-1					DRYER - DRY-01									Discharge and Cooling Conveyors						
	Silo level	Feed Pump PCP-1		Feed Pump PCP-2		Motor		Dry Bed Temperatures				Dryer Exhaust		Wet Level	RV-1	CV-1	CV-2	CV-3	Water	Product	RV-2
	LT-2111	Speed 0-100%	Pressure PIT-2108	Speed 0-100%	Pressure PIT-2105	Speed &	Amps	Bed 1 TE-3002	Bed 2 TE-3005	Bed 3 TE-3006	Bed 4 TE-3007	TT-5000	PIT-5003		Speed 0-100%	Speed 0-100%	Speed 0-100%	Speed 0-100%	Flow FI-4001	Temp TT-4009	Speed 0-100%
	Feet	Hz	PSIG	Hz	PSIG	Hz	Amps	°F	°F	°F	°F	°F	in. WC	in.	Hz	Hz	Hz	%	GPM	°F	Hz
0055	6.9	21	89	–	–	60	59	186	211	214	242	211	-1.6	8.9	13	30	45	–	90	80	60
0200	6.8	21	90	–	–	60	57	189	211	213	242	211	-1.3	9.0	12	30	45	–	90	80	60
0300	7.0	21	90	–	–	60	58	179	211	213	241	211	-1.8	9.0	13	30	45	–	90	80	60
0402	6.7	21	91	–	–	60	59	193	211	213	239	211	-1.2	9.1	13	30	45	–	90	79	60
0500	6.6	22	91	–	–	60	62	187	211	213	240	211	-1.2	9.1	12	30	45	–	90	79	60
0559	6.7	22	92	–	–	60	62	181	211	213	239	212	-1.1	9.1	12	30	45	–	90	79	60
0710	6.5	22	94	–	–	60	61	194	211	213	238	212	-1.2	9.1	13	30	45	–	90	79	60
0830	6.2	22	93	–	–	60	59	181	211	213	240	212	-1.2	9.2	13	30	45	–	90	79	60
0915	5.3	22	92	–	–	60	57	176	211	213	241	211	-0.9	9.2	13	30	45	–	90	79	60
1018	4.5	22	92	–	–	60	59	184	211	213	241	212	-0.9	9.2	13	30	45	–	90	79	60
1120	4.4	22	94	–	–	60	57	192	211	213	242	212	-1.0	9.2	13	30	45	–	90	78	60
1251	4.8	22	84	–	–	60	57	180	211	213	241	211	-1.2	9.2	13	30	45	–	90	79	60
1317	4.9	22	85	–	–	60	59	183	211	212	240	211	-1.4	9.3	13	30	45	–	90	79	60
1430	4.9	22	103	–	–	60	58	188	211	212	239	211	-1.4	9.4	13	30	45	–	90	80	60
1530	4.9	22	116	–	–	60	60	184	211	214	243	211	-1.3	9.4	13	30	45	–	90	82	60
1637	4.7	22	117	–	–	61	61	180	211	216	251	211	-1.6	9.4	13	30	45	–	90	83	60
1742	4.9	22	116	–	–	60	61	189	211	216	256	211	-1.4	9.3	13	30	45	–	90	83	60
1950	4.4	22	114	–	–	60	62	198	211	218	260	211	-1.4	9.3	13	30	45	–	90	78	60
2083	4.6	21	101	–	–	60	61	197	211	219	260	211	-1.5	9.2	13	30	45	–	90	79	60
2134	4.5	21	92	–	–	60	61	197	211	222	261	211	-1.2	9.1	12	30	45	–	90	79	60
2246	4.4	21	101	–	–	60	63	197	211	230	263	211	-1.3	9.0	13	30	45	–	90	80	60
2337	4.2	21	115	–	–	60	57	195	211	230	264	211	-1.6	8.8	12	30	45	–	90	80	60

Harrisonburg-Rockingham Regional Sewer Authority
K+S Biosolids drying System 00571

Operators Log Sheet

Komline-Sanderson
12 Holland Ave Peapack, NJ 07977-0257
908-234-1000 Fax: 908-234-0487
www.komline.com

Date: 10/16/2019 Operators: BJS | JC | MS

Time	DRYER FEED HOPPER H-1					DRYER - DRY-01									Discharge and Cooling Conveyors						
	Silo level	Feed Pump PCP-1		Feed Pump PCP-2		Motor		Dry Bed Temperatures				Dryer Exhaust		Weir Level	RV-1	CV-1	CV-2	CV-3	Water	Product	RV-2
	LT-2111	Speed 0-100%	Pressure PIT-2106	Speed 0-100%	Pressure PIT-2105	Speed &	Amps	Bed 1 TE-3002	Bed 2 TE-3005	Bed 3 TE-3006	Bed 4 TE-3007	TT-5000	PIT-3003		Speed 0-100%	Speed 0-100%	Speed 0-100%	Speed 0-100%	Flow FI-4001	Temp TT-4009	Speed 0-100%
	Feet	Hz	PSIG	Hz	PSIG	Hz	Amps	°F	°F	°F	°F	°F	in. WC	in.	Hz	Hz	Hz	%	GPM	°F	Hz
0053	4.1	21	124	–	–	60	59	195	211	208	263	211	-1.2	8.8	13	30	45	–	90	81	60
0145	4.0	21	112	–	–	60	58	195	211	217	254	211	-1.3	8.8	13	30	45	–	90	80	60
0300	3.8	20	112	–	–	60	59	187	211	217	244	211	-1.1	8.8	13	30	45	–	90	81	60
0344	3.8	20	110	–	–	60	65	193	211	218	243	211	-1.4	8.9	13	30	45	–	90	81	60
0452	3.7	20	111	–	–	60	59	193	211	222	245	211	-1.2	8.9	13	30	45	–	90	80	60
0526	3.4	20	112	–	–	60	61	190	211	221	246	211	-1.0	8.9	13	30	45	–	90	79	60
0651	3.3	20	113	–	–	60	59	195	211	220	247	211	-1.2	8.9	13	30	45	–	90	79	60
0825	3.3	16	104	–	–	60	62	197	210	216	244	211	-1.2	8.9	13	30	45	–	90	79	60
0915	2.8	16	102	–	–	60	62	195	210	219	242	211	-1.4	9.0	13	30	45	–	90	79	60
1030	2.2	16	97	–	–	60	64	196	210	224	242	210	-1.2	8.9	13	30	45	–	90	78	60
1126	1.7	16	98	–	–	60	65	196	210	232	245	210	-1.3	8.9	13	30	45	–	90	78	60
1258	1.8	16	104	–	–	60	60	196	210	232	248	210	-1.3	8.5	13	30	45	–	90	78	60
1328	2.0	14	103	–	–	60	63	199	210	232	248	210	-1.0	8.5	13	30	45	–	90	78	60
1425	2.3	14	100	–	–	60	61	196	210	240	251	210	-1.1	8.2	13	30	45	–	90	79	60
1530	2.9	14	97	–	–	60	60	198	210	253	260	210	-1.1	8.0	13	30	45	–	90	78	60
1645	3.5	14	106	–	–	60	58	199	211	261	265	210	-1.1	8.0	13	30	45	–	90	77	60
1822	4.4	16	111	–	–	60	61	202	212	276	274	210	-1.3	8.0	13	30	45	–	90	76	60
1930	4.5	20	133	–	–	60	58	193	212	279	278	210	-1.3	8.0	13	30	45	–	90	76	60
2049	4.7	20		20	100	60	63	187	211	279	279	210	-1.4	8.0	13	30	45	–	90	76	60
2203	4.7			20	100	60	63	180	210	263	272	210	-1.4	8.0	13	30	45	–	90	77	60
2343	4.7			20	100	60	67	182	210	243	260	211	-1.0	8.0	13	30	45	–	90	77	60
2442	4.4			20	100	60	79	169	210	227	242	211	-1.2	8.1	13	30	45	–	90	78	60

Harrisonburg-Rockingham Regional Sewer Authority
K-S Biosolids drying System 00571

Operators Log Sheet

Komline-Sanderson
12 Holland Av Peapack, NJ 07977-0257
908-234-1000 Fax: 908-234-9487
www.komline.com

Date: 10-17-19 Operators: 12-8 Evan / 8-4 JC / 4-12 MS

Time	DRYER FEED HOPPER H-1					DRYER - DRY-01									Discharge and Cooling Conveyors						
	Silo level	Feed Pump PCP-1		Feed Pump PCP-2		Motor		Dry Bed Temperatures				Dryer Exhaust		Weir Level	RV-1	CV-1	CV-2	CV-3	Water	Product	RV-2
	LT-2111	Speed 0-100%	Pressure PIT-2106	Speed 0-100%	Pressure PIT-2105	Speed &	Amps	Bed 1 TE-3002	Bed 2 TE-3005	Bed 3 TE-3006	Bed 4 TE-3007	TT-5000	PIT-3003		Speed 0-100%	Speed 0-100%	Speed 0-100%	Speed 0-100%	Flow FI-4001	Temp TT-4009	Speed 0-100%
	Feet	Hz	PSIG	Hz	PSIG	Hz	Amps	°F	°F	°F	°F	°F	In. WC	In.	Hz	Hz	Hz	%	GPM	°F	Hz
126	3.7	~~20~~	—	20	101	60	73	172	210	218	227	211	-1.1	8.5	13	30	45	—	90	79	60
222	3.6	—	—	20	86	59	79	171	210	215	224	211	-0.8	8.8	13	30	45	—	90	78	60
324	3.7	—	—	20	84	59	78	167	210	213	221	211	-1.3	9.2	13	30	45	—	90	78	60
445	4.2	-	—	20	79	59	88	171	210	213	216	211	-1.1	9.9	13	30	45	—	90	77	60
528	4.2	-	—	20	77	60	89	169	210	212	214	211	-0.8	10.3	13	30	45	—	90	77	60
631	7.7	—	—	18	78	59	90	174	210	212	213	211	-1.3	10.7	13	30	45	—	90	79	60
732	4.5	—	—	18	75	60	87	175	210	212	213	211	-1.2	11.3	13	30	45	—	90	79	60
0837	4.5	—	—	18	68	60	65	186	211	213	214	211	-1.2	12.9	13	30	45	—	90	79	60
0927	4.9	—	—	18	68	60	62	187	211	214	217	211	-0.9	12.9	13	30	45	—	90	74	60
1033	5.0	—	—	18	69	60	60	185	211	226	230	211	-0.7	12.9	13	30	45	—	90	77	60
1128	5.0	—	—	18	69	60	58	183	211	242	245	211	-0.7	11.6	13	30	45	—	90	76	60
1244	4.8	—	—	18	73	60	57	188	211	254	262	211	-0.8	9.8	13	30	45	—	90	76	60
1358	4.8	—	—	18	75	60	58	193	211	260	278	211	-1.0	9.2	13	30	45	—	90	76	60
1430	4.9	—	—	18	74	60	58	193	211	253	280	211	-0.9	8.8	13	30	45	—	90	76	60
1534	5.0	—	—	18	75	60	60	194	211	248	273	211	-1.0	8.4	13	30	45	—	90	79	60
1641	5.0	—	—	18	75	60	55	193	211	258	270	211	-1.2	8.4	13	30	45	—	90	80	60
1756	5.2	—	—	18	77	60	63	190	211	270	276	211	-1.3	8.1	13	30	45	—	90	81	60
1830	5.2	—	—	18	75	60	62	196	211	273	280	211	-1.2	7.3	13	30	45	—	90	81	60
1934	4.8	—	—	18	73	60	51	198	211	271	281	211	-1.2	6.6	13	30	45	—	90	83	60
2041	4.7	—	—	18	70	60	55	198	211	274	283	211	-0.7	6.4	13	30	45	—	90	84	60
2133	4.4	—	—	18	66	60	53	193	211	279	286	211	-0.8	6.0	13	30	45	—	90	83	60
2233	4.8	—	—	18	66	60	52	198	211	280	287	211	-1.1	6.0	13	30	45	—	90	82	60
2331	5.0	—	—	18	67	60	57	183	211	272	280	211	-1.1	6.0	13	30	45	—	90	81	60

Harrisonburg-Rockingham Regional Sewer Authority
K-S Biosolids drying System 00571

Operators Log Sheet

@ Komline-Sanderson
12 Holland Av Peapack, NJ 07977-0267
908-234-1000 Fax: 908-234-0487
www.komline.com

Date: 10/18/19 Operators: 12-8 BSS | 8-4 EMK | 4-12 MS

Time	DRYER FEED HOPPER H-1					DRYER - DRY-01									Discharge and Cooling Conveyors							
	Silo level	Feed Pump PCP-1		Feed Pump PCP-2		Motor		Dry Bed Temperatures				Dryer Exhaust		Wet Level	RV-1	CV-1	CV-2	CV-3	Water	Product	RV-2
	LT-2111	Speed 0-100%	Pressure PIT-2108	Speed 0-100%	Pressure PIT-2105	Speed &	Amps	Bed 1 TE-3002	Bed 2 TE-3005	Bed 3 TE-3008	Bed 4 TE-3007	TT-3000	PIT-3003		Speed 0-100%	Speed 0-100%	Speed 0-100%	Speed 0-100%	Flow FI-4001	Temp TT-4009	Speed 0-100%
	Feet	Hz	PSIG	Hz	PSIG	Hz	Amps	°F	°F	°F	°F	°F	in. WC	in.	Hz	Hz	Hz	%	GPM	°F	Hz
0252	5.2	–	–	18	64	60	58	182	211	237	270	211	-0.2	6.0	13	30	45	–	90	80	60
0359	5.3	–	–	18	67	60	58	184	211	239	260	211	-0.9	6.0	13	30	45	–	90	80	60
0300	5.5	–	–	18	68	60	61	186	211	232	252	211	-0.9	6.0	13	30	45	–	90	80	60
0400	5.3	–	–	18	68	60	58	183	211	228	247	211	-1.1	6.2	13	30	45	–	90	80	60
0500	5.2	–	–	18	68	60	62	182	211	226	244	211	-0.9	6.2	13	30	45	–	90	79	60
0600	5.3	–	–	18	68	60	59	180	211	225	242	211	-1.1	6.2	13	30	45	–	90	78	60
0703	5.4	–	–	18	68	60	58	173	211	223	240	211	-1.1	6.2	12	30	45	–	90	78	60
824	5.8	–	–	18	67	60	62	180	211	223	237	211	-0.9	6.7	13	30	45	–	90	78	60
939	5.9	–	–	18	62	60	58	177	211	225	238	211	-1.06	8.3	13	30	45	–	90	78	60
1027	6.2	–	–	18	63	60	60	176	211	229	242	211	-1.01	8.3	13	30	45	–	90	78	60
1128	6.1	–	–	18	64	60	58	180	211	228	243	211	-1.03	8.3	13	30	45	–	90	77	60
1300	6.4	–	–	18	63	60	58	177	211	227	242	212	-1.80	8.3	13	30	45	–	90	76	60
1407	6.7	–	–	18	65	60	58	178	211	226	241	212	-1.54	8.9	13	30	45	–	90	76	60
1502	6.8	–	–	18	67	60	58	179	211	224	244	211	-1.00	9.5	13	30	45	–	90	76	60
1701	7.3	–	–	18	75	60	63	177	211	231	249	211	-0.8	9.5	13	30	45	–	90	75	60
1823	7.1	–	–	18	76	60	67	179	211	225	252	211	-1.0	10.0	13	30	45	–	90	76	60
1920	7.5	–	–	18	74	60	64	175	211	216	250	211	-1.1	10.0	13	30	45	–	90	76	60
2008	7.6	–	–	18	71	60	60	179	211	217	247	211	-1.0	10.0	13	30	45	–	90	77	60
2106	7.8	–	–	18	67	60	66	183	211	217	246	211	-1.0	10.0	13	30	45	–	90	77	60
2248	7.9	–	–	18	67	60	66	182	211	218	248	211	-1.3	10.0	13	30	45	–	90	78	60
2324	8.0	–	–	18	65	60	63	186	211	219	249	211	-1.2	10.0	13	30	45	–	90	78	60

* 211 10/18/19 MS

* 247 MS 10/18/19

KOMLINE-SANDERSON ENGINEERING CORPORATION

00571 - Operator Data Sheets - Page 1 - Rev D

P:\Operations Start/Process & Instrument Equipment Manual\Dryer Building\Komline Dryer\Komline Dryer Operator Log Sheets

Harrisonburg-Rockingham Regional Sewer Authority
K-S Biosolids drying System 00571

Operators Log Sheet

Komline-Sanderson
12 Holland Av Peapack, NJ 07977-0257
908-234-1000 Fax: 908-234-9487
www.komline.com

Date: 10/18/19 Operators: M-N / BM | N-M / Elm

Time	DRYER FEED HOPPER H-1					DRYER - DRY-01									Discharge and Cooling Conveyors						
	Silo level	Feed Pump PCP-1		Feed Pump PCP-2		Motor		Dry Bed Temperatures				Dryer Exhaust		Weir Level	RV-1	CV-1	CV-2	CV-3	Water	Product	RV-2
	LT-2111	Speed 0-100%	Pressure PIT-2106	Speed 0-100%	Pressure PIT-2105	Speed &	Amps	Bed 1 TE-3002	Bed 2 TE-3005	Bed 3 TE-3006	Bed 4 TE-3007	TT-5000	PIT-3003		Speed 0-100%	Speed 0-100%	Speed 0-100%	Speed 0-100%	Flow FI-4001	Temp TT-4000	Speed 0-100%
	Feet	Hz	PSIG	Hz	PSIG	Hz	Amps	°F	°F	°F	°F	°F	In. WC	In.	Hz	Hz	Hz	%	GPM	°F	Hz
0127	8.3	–	–	18	67	60	62	183	211	217	247	211	-1.2	10.0	13	30	45	–	90	78	60
0236	8.6	–	–	18	66	60	65	181	211	218	246	211	-1.1	10.0	12	30	45	–	90	78	60
0327	8.7	–	–	19	68	60	62	182	211	218	249	211	-1.5	10.0	13	30	45	–	90	79	60
0421	8.4	–	–	20	72	60	58	188	211	219	246	211	-0.9	10.0	13	30	45	–	90	79	60
0518	8.2	–	–	20	73	60	62	187	211	219	250	211	-1.1	9.9	13	30	45	–	90	80	60
0615	8.5	–	–	20	73	60	61	187	211	218	251	211	-1.2	9.8	13	30	45	–	90	80	60
0719	8.2	–	–	20	73	60	61	188	211	218	252	211	-1.2	9.6	13	30	45	–	90	80	60
0832	8.6	–	–	20	67	60	60	185	211	216	252	211	-1.5	9.6	13	30	45	–	90	81	60
0916	8.5	–	–	20	67	60	64	186	211	217	252	211	-1.3	9.6	13	30	45	–	90	81	60
1039	8.7	–	–	20	65	60	64	176	211	216	243	211	-1.2	9.8	13	30	45	–	90	81	60
1121	8.4	–	–	20	64	60	60	182	211	216	245	211	-1.2	9.8	13	30	45	–	90	81	60
1255	8.3	–	–	20	65	60	59	185	211	216	249	211	-1.2	9.8	13	30	45	–	90	79	60
1353	8.3	–	–	20	66	60	59	184	211	217	251	211	-1.3	9.8	13	30	45	–	90	79	60
1509	8.4	–	–	22	68	60	61	175	211	217	253	211	-1.1	9.9	13	30	45	–	90	79	60
1604	8.3	–	–	22	70	60	64	176	211	216	253	211	-1.6	9.9	13	30	45	–	90	79	60
1708	8.2	–	–	22	73	60	63	181	211	215	246	211	-1.4	9.9	13	30	45	–	90	80	60
1807	8.1	–	–	22	73	60	60	181	211	216	243	211	-1.4	10.2	13	30	45	–	90	79	60
1906	8.0	–	–	22	73	60	67	185	211	216	240	211	-1.2	11.1	13	30	45	–	90	80	60
2016	7.8	–	–	22	75	60	67	180	211	218	243	211	-1.2	11.1	13	30	45	–	90	79	60
2104	7.7	–	–	22	77	60	65	179	211	219	247	211	-1.4	11.0	12	30	45	–	90	79	60
2204	7.7	–	–	22	81	60	63	181	211	219	248	211	-1.5	11.0	13	30	45	–	90	79	60
2313	7.5	–	–	22	81	60	64	187	211	218	248	211	-1.3	11.0	13	30	45	–	90	79	60

Harrisonburg-Rockingham Regional Sewer Authority
K•S Biosolids drying System 00571

Operators Log Sheet

Komline-Sanderson
12 Holland Ave Peapack, NJ 07977-0257
908-234-1000 Fax: 908-234-9487
www.komline.com

Date: 10-20-19 Operators: M-N | N-M

Time	DRYER FEED HOPPER HF-1					DRYER - DRY-01										Discharge and Cooling Conveyors						
	Silo level	Feed Pump PCP-1		Feed Pump PCP-2		Motor		Dry Bed Temperatures				Dryer Exhaust		Weir Level	RV-1	CV-1	CV-2	CV-3	Water	Product	RV-2
	LT-2111	Speed 0-100%	Pressure PIT-2106	Speed 0-100%	Pressure PIT-2105	Speed &	Amps	Bed 1 TE-3002	Bed 2 TE-3005	Bed 3 TE-3006	Bed 4 TE-3007	TT-5000	PIT-3003		Speed 0-100%	Speed 0-100%	Speed 0-100%	Speed 0-100%	Flow FI-4001	Temp TT-4009	Speed 0-100%
	Feet	Hz	PSIG	Hz	PSIG	Hz	Amps	°F	°F	°F	°F	°F	in. WC	in.	Hz	Hz	Hz	%	GPM	°F	Hz
0018	-7.1	–	–	22	81	60	61	185	211	217	245	211	-1.3	11.0"	13	30	45	–	90	80	60
0122	7.3	–	–	21	77	60	65	188	211	217	243	211	-1.1	11.0"	13	30	45	–	90	80	60
0232	7.1	–	–	21	74	60	62	188	211	218	244	211	-1.1	11.0"	13	30	45	–	90	80	60
0340	7.4	–	–	21	74	60	61	187	211	218	246	211	-1.1	11.0	13	30	45	–	90	80	60
0445	7.3	–	–	21	73	60	63	185	211	221	250	211	-1.1	10.5"	13	30	45	–	90	80	60
0543	7.3	–	–	21	75	60	62	186	211	220	252	211	-1.1	10.5"	13	30	45	–	90	80	60
0646	7.3	–	–	21	76	60	63	186	211	219	251	211	-1.0	10.5"	13	30	45	–	90	80	60
0750	7.1	–	–	21	76	60	61	185	211	218	249	211	-1.0	10.5"	13	30	45	–	90	81	60
0855	7.1	–	–	21	77	60	60	188	211	218	248	211	-1.1	10.5"	13	30	45	–	90	81	60
0959	7.2	–	–	21	75	60	62	185	211	218	248	211	-1.0	10.5"	13	30	45	–	90	80	60
1057	7.1	–	–	21	78	60	65	188	211	219	250	211	-1.0	10.5"	13	30	45	–	90	80	60
1157	7.0	–	–	21	79	60	60	182	211	219	252	212	-1.2	10.3"	13	30	45	–	90	80	60
1259	6.9	–	–	21	82	59	67	186	211	217	251	211	-1.1	10.3	13	30	45	–	90	81	60
1400	6.7	–	–	21	85	60	61	183	211	218	251	211	-1.0	10.3	12	30	45	–	90	81	60
1533	6.3	–	–	21	85	59	80	177	211	220	246	211	-1.0	10.3	13	30	45	–	90	81	60
1624	6.5	–	–	21	85	60	63	180	211	220	255	211	-1.4	10.3	13	30	45	–	90	80	60
1753	6.4	–	–	21	84	59	67	178	211	218	249	211	-1.3	10.3	13	30	45	–	90	81	60
1852	6.4	–	–	21	85	60	61	185	211	218	246	211	-1.4	10.3	12	30	45	–	90	81	60
1951	6.4	–	–	21	86	60	63	183	211	217	249	211	-1.3	10.3	13	30	45	–	90	81	60
2057	6.4	–	–	21	88	59	63	185	211	218	249	211	-1.2	10.3	13	30	45	–	90	81	60
2143	6.3	–	–	21	86	60	64	182	211	218	250	211	-1.0	10.3	13	30	45	–	90	81	60
2234	6.4	–	–	21	84	60	60	181	211	220	253	211	-1.0	10.3	13	30	45	–	90	80	60
2332	6.4	–	–	21	86	60	64	185	211	220	256	211	-1.5	10.1	13	30	45	–	90	80	60

Harrisonburg-Rockingham Regional Sewer Authority
K-S Biosolids drying System 00571

Operators Log Sheet

Komline-Sanderson
12 Holland Ave Paspack, NJ 07977-0257
908-834-1000 Fax: 908-334-8457
www.komline.com

Date: 10-21-19 Operators: 12-8 BM | 8-4 JC/MS | 4-12 Evan

Time	DRYER FEED HOPPER H-1					DRYER - DRY-01									Discharge and Cooling Conveyors						
	Silo level	Feed Pump PCP-1		Feed Pump PCP-2		Motor		Dry Bed Temperatures				Dryer Exhaust		Weir Level	RV-1	CV-1	CV-2	CV-3	Water	Product	RV-2
	LT-2111	Speed 0-100%	Pressure PIT-2106	Speed 0-100%	Pressure PIT-2106	Speed &	Amps	Bed 1 TE-3002	Bed 2 TE-3005	Bed 3 TE-3006	Bed 4 TE-3007	TT-5000	PIT-3003		Speed 0-100%	Speed 0-100%	Speed 0-100%	Speed 0-100%	Flow FI-4001	Temp TT-4009	Speed 0-100%
	Feet	Hz	PSIG	Hz	PSIG	Hz	Amps	°F	°F	°F	°F	°F	In. WC	In.	Hz	Hz	Hz	%	GPM	°F	Hz
0036	6.5	–	–	21	88	60	60	189	211	220	257	211	-1.4	9.8"	13	30	45	–	90	80	60
0123	6.5	–	–	21	89	60	60	182	211	218	254	211	-1.3	9.8"	13	30	45	–	90	80	60
0230	6.6	–	–	21	89	60	61	187	211	217	249	211	-1.2	9.6	13	30	45	–	90	81	60
0319	6.7	–	–	21	87	60	60	185	211	217	249	211	-1.1	9.6"	13	30	45	–	90	81	60
0428	6.7	–	–	21	79	60	63	183	211	217	250	211	-1.0	9.6"	13	30	45	–	90	80	60
0513	6.7	–	–	21	77	60	61	184	211	217	251	211	-1.1	9.4"	13	30	45	–	90	81	60
0616	6.7	–	–	21	74	60	59	183	211	217	249	211	-1.5	9.2"	13	30	45	–	90	81	60
0715	6.7	–	–	21	75	60	61	182	211	219	250	211	-1.4	9.2"	13	30	45	–	90	81	60
1047	6.3	–	–	21	79	60	62	182	211	219	252	211	-1.0	9.0	13	30	45	–	90	77	60
* 1255	7.7	0	16.55	0	30	60	56	210	213	272	271	211	-1.2	9.0	13	30	45	–	90	77	60
1344	8.4	0	17	0	30	60	51	212	221	286	283	211	-1.3	9.0	13	30	45	–	90	77	60
✓ 1440	8.7	21	108	0	30	60	50	205	257	299	294	211	-1.2	10.0	13	30	45	–	90	77	60
1532	8.4	21	106	0	30	60	57	198	252	306	301	211	-1.3	10.0	13	30	45	–	90	77	60
1658	8.8	21	114	–	–	60	52	193	212	310	304	212	-1.2	9.8	13	30	45	–	90	78	60
1755	8.4	22	116	–	–	60	54	194	211	312	305	212	-1.1	9.4	13	30	45	–	90	78	60
1907	8.2	22	118	–	–	59	59	202	211	308	305	212	-1.2	9.0	13	30	45	–	90	77	60
2012	8.2	22	118	–	–	60	62	198	211	277	302	212	-1.7	9.0	13	30	45	–	90	78	60
2106	7.9	22	109	–	–	60	60	192	211	228	285	212	-1.2	9.3	13	30	45	–	90	81	60
2212	8.0	22	100	–	–	59	63	184	211	218	264	212	-1.0	93	13	30	45	–	90	82	60
2305	7.5	22	99	–	–	60	64	194	211	218	256	212	-1.0	9.7	13	30	45	–	90	82	60

* Running Shutdown Cycle ✓ = Running Again

Harrisonburg-Rockingham Regional Sewer Authority
K-S Biosolids drying System 00571

Operators Log Sheet

Komline-Sanderson
12 Holland Av Peapack, NJ 07977-0257
908-234-1000 Fax: 908-234-0487
www.komline.com

Date: 10-22-19 Operators: BM (12-8) | MS (8-4) | Calm (4-12)

Time	DRYER FEED HOPPER H-4					DRYER - DRY-01									Discharge and Cooling Conveyors						
	Silo level	Feed Pump PCP-1		Feed Pump PCP-2		Motor		Dry Bed Temperatures				Dryer Exhaust		Weir Level	RV-1	CV-1	CV-2	CV-3	Water	Product	RV-2
	LT-2111	Speed 0-100%	Pressure PIT-2106	Speed 0-100%	Pressure PIT-2105	Speed &	Amps	Bed 1 TE-3002	Bed 2 TE-3005	Bed 3 TE-3008	Bed 4 TE-3007	TT-6000	PIT-3003		Speed 0-100%	Speed 0-100%	Speed 0-100%	Speed 0-100%	Flow FI-4001	Temp TT-4000	Speed 0-100%
	Feet	Hz	PSIG	Hz	PSIG	Hz	Amps	°F	°F	°F	°F	°F	in. WC	in.	Hz	Hz	Hz	%	GPM	°F	Hz
0045	7.3	22	103	—	—	60	62	192	211	216	248	212	-1.3	9.7"	13	30	45	—	90	80	60
0120	7.0	22	104	—	—	60	63	186	211	215	246	212	-1.2	9.9"	13	30	45	—	90	79	60
0230	7.0	21	110	—	—	60	60	180	211	215	243	212	-1.3	10.0"	13	30	45	—	90	78	60
0317	6.9	21	117	—	—	60	61	192	211	215	245	212	-1.3	10.2"	13	30	45	—	90	79	60
0428	6.9	21	125	—	—	60	59	193	211	216	249	212	-1.1	10.2"	13	30	45	—	90	77	60
0522	6.9	21	131	—	—	60	61	192	211	217	249	211	-1.2	10.0"	13	30	45	—	90	78	60
0624	6.9	21	135	—	—	60	63	200	211	216	247	211	-1.1	9.8"	13	30	45	—	90	78	60
0[illegible]	6.9	21	133	—	—	60	62	200	211	217	247	211	-1.4	9.8"	13	30	45	—	90	79	60
1017	6.4	21	112	—	—	60	64	197	211	216	244	211	-0.9	8.7	13	30	45	—	90	78	60
1127	6.2	21	114	—	—	60	58	204	211	218	243	211	-1.0	8.9	13	30	45	—	90	80	60
1405	5.8	21	121	—	—	60	57	189	211	226	249	211	-1.2	8.3	13	30	45	—	90	80	60
1534	5.5	21	122	—	—	60	58	196	211	228	246	211	-1.4	8.3	13	30	45	—	90	81	60
1700	5.3	19	126	—	—	60	56	200	211	235	250	211	-1.0	8.1	13	30	45	—	90	80	60
1804	5.4	19	125	—	—	59	64	200	211	236	252	211	-1.1	7.4	13	30	45	—	90	79	60
1906	5.5	18	222	—	—	60	56	198	211	236	252	211	-1.2	6.6	13	30	45	—	90	80	60
2013	5.4	19	121	—	—	60	54	200	211	241	255	212	-1.2	6.6	13	30	45	—	90	80	60
2109	5.4	19	117	—	—	60	60	200	211	251	263	212	-1.2	6.3	13	30	45	—	90	80	60
2200	5.2	19	114	—	—	59	53	197	211	257	269	212	-1.4	6.0	13	30	45	—	90	80	60
2310	5.0	19	108	—	—	60	60	194	211	261	273	212	-1.4	6.0	13	30	45	—	90	80	60

Harrisonburg-Rockingham Regional Sewer Authority
K•S Biosolids drying System 00571

Operators Log Sheet

Komline-Sanderson
12 Holland Av Peapack, NJ 07977-0267
908-234-1000 Fax: 908-234-0487
www.komline.com

Date: 10-23-19 Operators: 12-8 PAA | 8-4 MS | 4-12 Evan

Time	DRYER FEED HOPPER H-1					DRYER - DRY-01									Discharge and Cooling Conveyors						
	Silo level	Feed Pump PCP-1		Feed Pump PCP-2		Motor		Dry Bed Temperatures				Dryer Exhaust		Weir Level	RV-1	CV-1	CV-2	CV-3	Water	Product	RV-2
	LT-2111	Speed 0-100%	Pressure PIT-2106	Speed 0-100%	Pressure PIT-2105	Speed &	Amps	Bed 1 TE-3002	Bed 2 TE-3005	Bed 3 TE-3006	Bed 4 TE-3007	TT-5000	PIT-3003		Speed 0-100%	Speed 0-100%	Speed 0-100%	Speed 0-100%	Flow FI-4001	Temp TT-4009	Speed 0-100%
	Feet	Hz	PSIG	Hz	PSIG	Hz	Amps	°F	°F	°F	°F	°F	In. WC	In.	Hz	Hz	Hz	%	GPM	°F	Hz
0037	4.9	19	104	—	—	60	58	199	211	262	275	212	-1.3	6.0	13	30	45	—	90	80	60
0125	4.9	19	105	—	—	60	55	197	211	261	275	212	-1.0	6.0	13	30	45	—	90	80	60
0231	4.8	19	110	—	—	60	56	200	211	259	275	212	-1.1	6.0	13	30	45	—	90	80	60
0324	4.8	19	112	—	—	60	60	201	211	257	273	212	-1.1	6.0	13	30	45	—	90	80	60
0434	4.8	19	116	—	—	60	54	195	211	254	271	212	-1.1	6.0	13	30	45	—	90	80	60
0521	4.8	19	117	—	—	60	53	195	211	252	270	212	-1.4	6.0	13	30	45	—	90	79	60
0639	4.7	19	119	—	—	60	56	191	211	251	268	212	-1.3	6.0	13	30	45	—	90	79	60
0721	4.7	19	116	—	—	60	55	190	211	250	268	212	-1.5	6.0	13	30	45	—	90	79	60
0857	4.3	19	110	—	—	60	61	188	211	243	261	212	-1.3	5.8	13	30	45	—	90	79	60
0954	4.4	19	109	—	—	60	63	194	211	234	252	212	-1.0	5.8	13	30	45	—	90	79	60
1312	4.4	19	94	—	—	60	61	180	210	219	229	212	-1.0	13.0	13	30	45	—	90	77	60
1407	4.5	19	90	—	—	60	61	174	210	220	232	212	-1.0	14.0	13	30	45	—	90	75	60
1502	4.6	19	92	—	—	60	65	178	211	215	232	213	-0.60	14	13	30	45	—	90	74	60
1652	4.7	19	94	—	—	60	57	176	211	217	227	212	-0.7	15	13	30	45	—	90	75	60
1754	4.6	19	98	—	—	60	58	185	211	220	232	212	-0.9	15	13	30	45	—	90	75	60
1851	4.8	19	104	—	—	60	58	179	211	225	239	212	-0.9	14	13	30	45	—	90	74	60
2007	4.8	19	106	—	—	60	60	172	211	236	246	212	-0.8	12.5	12	30	45	—	90	77	60
2108	5.0	19	107	—	—	60	62	183	211	249	260	212	-1.0	10.5	12	30	45	—	90	76	60
2212	4.8	19	109	—	—	60	65	191	211	246	272	212	-1.4	10.0	13	30	45	—	90	77	60
2301	7.8	19	108	—	—	59	68	198	211	225	269	212	-1.1	10.0	13	30	45	—	90	79	60

Harrisonburg-Rockingham Regional Sewer Authority
K-S Biosolids drying System 00571

Operators Log Sheet

Komline-Sanderson
12 Holland Av Peapack, NJ 07977-0267
908-234-1000 Fax: 908-234-9487
www.komline.com

Date: 10-29-19 Operators: BK / GB / EMA

Time	DRYER FEED HOPPER H-1					DRYER - DRY-01									Discharge and Cooling Conveyors						
	Silo level	Feed Pump PCP-1		Feed Pump PCP-2		Motor		Dry Bed Temperatures				Dryer Exhaust		Weir Level	RV-1	CV-1	CV-2	CV-3	Water	Product	RV-2
	LT-2111	Speed 0-100%	Pressure PIT-2106	Speed 0-100%	Pressure PIT-2105	Speed &	Amps	Bed 1 TE-3002	Bed 2 TE-3005	Bed 3 TE-3008	Bed 4 TE-3007	TT-5000	PIT-3003		Speed 0-100%	Speed 0-100%	Speed 0-100%	Speed 0-100%	Flow R-4001	Temp TT-4009	Speed 0-100%
	Feet	Hz	PSIG	Hz	PSIG	Hz	Amps	°F	°F	°F	°F	°F	in. WC	in.	Hz	Hz	Hz	%	GPM	°F	Hz
0039	5.1	19	115	—	—	60	58	195	211	225	261	212	-1.4	10.0	13	30	45	—	90	81	60
0120	7.6	19	118	—	—	60	63	197	211	230	264	212	+0.5	10.0	13	30	45	—	90	81	60
0226	7.6	19	120	—	—	60	61	197	211	242	270	212	-1.0	10.0	13	30	45	—	90	80	60
0319	5.2	19	123	—	—	60	60	193	211	252	276	212	-1.5	8.8	13	30	45	—	90	80	60
0426	5.4	19	128	—	—	60	60	198	211	256	280	212	-1.2	9.0	13	30	45	—	90	79	60
0519	5.4	19	123	—	—	60	58	196	211	251	280	212	-1.0	9.0	13	30	45	—	90	80	60
0639	5.6	19	118	—	—	60	56	194	211	252	272	212	-1.0	8.8	13	30	45	—	90	81	60
0725	5.4	20	111	—	—	60	57	196	211	257	273	212	-1.2	8.5	13	30	45	—	90	82	60
0910	5.6	20	102	—	—	60	63	196	212	251	268	212	-1.0	8.5	13	30	45	—	90	82	60
1030	5.6	20	100	—	—	60	57	190	211	245	264	212	-2.4	8.5	13	30	45	—	90	82	60
1307	5.4	20	102	—	—	60	62	197	211	291	301	212	-2.2	8.5	12	30	45	—	90	80	60
1410	5.2	20	105	—	—	60	62	191	211	242	260	212	-1.9	8.5	13	30	45	—	90	79	60
1517	5.0	20	105	—	—	60	56	181	211	238	260	212	-2.0	8.5	13	30	45	—	90	80	60
1707	4.8	20	101	—	—	60	56	197	211	237	258	212	-1.1	8.5	13	30	45	—	90	81	60
1805	4.7	20	103	—	—	60	56	195	211	236	257	212	-1.7	8.5	13	30	45	—	90	80	60
1907	4.6	20	104	—	—	60	63	198	211	232	257	212	-1.8	8.2	13	30	45	—	90	79	60
2011	4.9	20	105	—	—	59	64	193	211	236	253	212	-1.9	8.3	13	30	45	—	90	79	60
2107	4.6	20	102	—	—	59	61	198	211	228	249	212	-1.6	7.8	13	30	45	—	90	80	60
2209	4.5	20	96	—	—	60	60	189	211	221	247	212	-1.8	8.0	13	30	45	—	90	81	60
2305	4.4	20	91	—	—	60	63	193	211	221	246	212	-2.3	8.3	13	30	45	—	90	81	60

KOMLINE-SANDERSON ENGINEERING CORPORATION

D0571 - Operator Data Sheets - Page 1 - Rev D

P:\Operations Docs\Process & Instrument Equipment Manuals\Dryer Building\Komline Dryer\Komline Dryer Operator Log Sheets

Harrisonburg-Rockingham Regional Sewer Authority
K-S Biosolids drying System 00571

Operators Log Sheet

Komline-Sanderson
12 Holland Av Peapack, NJ 07977-0257
908-234-1000 Fax: 908-234-9487
www.komline.com

Date: 10-25-19 Operators: 12-8 BM | 8-4 BJ | 4-12 GBM

Time	DRYER FEED HOPPER H-1					DRYER - DRY-01									Discharge and Cooling Conveyors						
	Silo level	Feed Pump PCP-1		Feed Pump PCP-2		Motor		Dry Bed Temperatures				Dryer Exhaust		Weir Level	RV-1	CV-1	CV-2	CV-3	Water	Product	RV-2
	LT-2111	Speed 0-100%	Pressure PIT-2105	Speed 0-100%	Pressure PIT-2105	Speed &	Amps	Bed 1 TE-3002	Bed 2 TE-3005	Bed 3 TE-3006	Bed 4 TE-3007	TT-3000	PIT-3003		Speed 0-100%	Speed 0-100%	Speed 0-100%	Speed 0-100%	Flow FI-4001	Temp TT-4009	Speed 0-100%
	Feet	Hz	PSIG	Hz	PSIG	Hz	Amps	°F	°F	°F	°F	°F	in. WC	in.	Hz	Hz	Hz	%	GPM	°F	Hz
0045	4.4	20	92	—	—	60	62	195	211	229	243	212	-0.6	8.5"	13	30	45	—	90	80	60
0130	4.2	20	93	—	—	60	59	190	211	228	245	212	-2.2	8.5"	13	30	45	—	90	79	60
0230	4.1	20	98	—	—	60	56	191	211	227	248	212	-2.2	8.5"	13	30	45	—	90	79	60
0326	4.2	20	98	—	—	60	56	194	211	227	247	212	-2.2	8.5"	13	30	45	—	90	79	60
0425	4.8	20	101	—	—	60	58	187	211	223	244	212	-1.87	8.5"	13	30	45	—	90	79	60
0525	4.7	20	103	—	—	60	58	191	211	222	242	212	-2.2	8.5"	13	30	45	—	90	79	60
0626	4.7	20	107	—	—	60	59	193	211	221	242	212	-1.82	8.9"	13	30	45	—	90	79	60
0721	4.8	20	108	—	—	60	57	188	211	222	244	212	-1.9	8.9"	13	30	45	—	90	79	60
0821	4.9	20	105	—	—	60	60	193	211	224	246	212	-1.9	8.9	13	30	45	—	90	79	60
0916	4.9	20	106	—	—	60	60	196	211	225	247	212	-1.8	8.9	12	30	45	—	90	79	60
1049	5.3	20	98	—	—	60	61	190	211	223	247	212	-1.6	8.9	12	30	45	—	90	78	60
1139	5.3	20	92	—	—	60	61	188	211	222	246	212	-1.7	8.9	13	30	45	—	90	78	60
1224	5.5	20	90	—	—	60	57	193	211	220	244	212	-1.8	8.9	12	30	45	—	90	78	60
1419	5.5	20	92	—	—	60	56	188	211	218	243	212	-2.1	8.9	13	30	45	—	90	78	60
1524	5.5	20	93	—	—	60	58	192	211	216	242	212	-1.7	8.9	13	30	45	—	90	78	60
1650	5.7	20	100	—	—	60	58	190	211	216	242	212	-1.6	8.3	13	30	45	—	90	78	60
1806	5.7	20	102	—	—	60	59	192	211	215	245	212	-1.6	9.3	12	30	45	—	90	77	60
1908	7.8	20	98	—	—	60	64	195	211	215	243	212	-1.5	9.3	13	30	45	—	90	77	60
2009	5.9	20	99	—	—	60	60	188	211	214	243	212	-1.5	93	13	30	45	—	90	78	60
2111	5.8	20	100	—	—	60	60	190	211	214	242	212	-1.6	9.3	13	30	45	—	90	78	60
2212	6.0	20	102	—	—	60	60	191	211	215	242	212	-1.9	9.4	12	30	45	—	90	78	60
2304	6.0	20	105	—	—	60	58	191	211	215	243	212	-1.5	9.4	13	30	45	—	90	79	60

Harrisonburg-Rockingham Regional Sewer Authority
K-S Biosolids drying System 00571

Operators Log Sheet

Komline-Sanderson
12 Holland Av Peapack, NJ 07977-0287
908-234-1000 Fax: 908-234-8487
www.komline.com

Date: 10-26-19 Operators: M-N | N-M

Time	DRYER FEED HOPPER H-1					DRYER - DRY-01										Discharge and Cooling Conveyors						
	Silo level	Feed Pump PCP-1		Feed Pump PCP-2		Motor		Dry Bed Temperatures				Dryer Exhaust		Weir Level	RV-1	CV-1	CV-2	CV-3	Water	Product	RV-2
	LT-2111	Speed 0-100%	Pressure PIT-2106	Speed 0-100%	Pressure PIT-2106	Speed &	Amps	Bed 1 TE-3002	Bed 2 TE-3005	Bed 3 TE-3006	Bed 4 TE-3007	TT-6000	PIT-3003		Speed 0-100%	Speed 0-100%	Speed 0-100%	Speed 0-100%	Flow FI-4001	Temp TT-4009	Speed 0-100%
	Feet	Hz	PSIG	Hz	PSIG	Hz	Amps	°F	°F	°F	°F	°F	in. WC	in.	Hz	Hz	Hz	%	GPM	°F	Hz
0055	6.2	20	109	–	–	60	62	194	211	214	244	212	-1.6	9.4	13	30	45	–	90	79	60
0:00	6.4	20	111	–	–	60	60	194	211	215	245	211	-1.6	9.4	13	30	45	–	90	78	60
3:00	6.4	20	105	–	–	60	62	196	211	216	246	211	-1.6	9.4	13	30	45	–	90	78	60
4:00	6.4	20	102	–	–	60	63	189	211	215	247	211	-1.5	9.4	13	30	45	–	90	79	60
4:55	6.7	20	101	–	–	60	58	189	211	215	247	211	-1.7	9.4	13	30	45	–	90	79	60
5:58	6.7	20	103	–	–	60	60	188	211	216	247	211	-1.8	9.4	13	30	45	–	90	79	60
7:08	6.5	20	107	–	–	60	64	192	211	215	248	211	-1.8	9.4	13	30	45	–	90	79	60
8:04	6.4	20	106	–	–	60	60	196	211	216	249	211	-1.8	9.4	13	30	45	–	90	79	60
9:02	6.5	20	108	–	–	60	59	190	211	216	250	211	-2.0	9.4	13	30	45	–	90	79	60
11:07	6.8	20	108	–	–	60	61	196	211	215	246	211	-1.5	9.2	13	30	45	–	90	79	60
1253	6.9	20	107	–	–	60	62	199	211	215	242	211	-1.6	9.2	13	30	45	–	90	79	60
1355	6.9	20	108	–	–	60	62	197	211	216	243	211	-1.7	9.2	13	30	45	–	90	78	60
1458	6.8	20	109	–	–	60	59	198	211	217	246	211	-1.5	9.2	13	30	45	–	90	78	60
1600	6.4	20	104	–	–	60	58	199	211	217	248	211	-1.7	9.2	13	30	45	–	90	78	60
1659	6.5	20	103	–	–	60	57	199	211	220	250	211	-1.6	9.1	13	30	45	–	90	78	60
1900	6.5	20	100	–	–	60	58	196	211	221	252	211	-1.5	9.0	12	30	45	–	90	78	60
1903	6.6	20	101	–	–	60	62	197	211	226	254	211	-1.5	9.0	13	30	45	–	90	78	60
1959	6.7	20	105	–	–	60	61	194	211	225	254	211	-1.6	8.8	13	30	45	–	90	78	60
2059	6.6	20	99	–	–	60	63	193	211	221	252	211	-1.6	8.8	13	30	45	–	90	79	60
2202	7.1	20	96	–	–	60	61	192	211	222	251	211	-1.5	8.8	12	30	45	–	90	79	60
2252	7.0	20	100	–	–	60	59	191	211	221	251	211	-1.6	8.8	12	30	45	–	90	79	60

Harrisonburg-Rockingham Regional Sewer Authority
K-S Biosolids drying System 00571

Operators Log Sheet

Komline-Sanderson
12 Holland Av Peapack, NJ 07977-0257
908-234-1000 Fax: 908-234-0487
www.komline.com

Date: 10-27-19 Operators: M-N / N-M / BSS

Time	DRYER FEED HOPPER H-1					DRYER - DRY-01									Discharge and Cooling Conveyors						
	Silo level	Feed Pump PCP-1		Feed Pump PCP-2		Motor		Dry Bed Temperatures				Dryer Exhaust		Weir Level	RV-1	CV-1	CV-2	CV-3	Water	Product	RV-2
	LT-2111	Speed 0-100%	Pressure PIT-2106	Speed 0-100%	Pressure PIT-2105	Speed &	Amps	Bed 1 TE-3002	Bed 2 TE-3005	Bed 3 TE-3006	Bed 4 TE-3007	TT-5000	PIT-3003		Speed 0-100%	Speed 0-100%	Speed 0-100%	Speed 0-100%	Flow FI-4001	Temp TT-4009	Speed 0-100%
	Feet	Hz	PSIG	Hz	PSIG	Hz	Amps	°F	°F	°F	°F	°F	in. WC	in.	Hz	Hz	Hz	%	GPM	°F	Hz
1332	7.2	20	110	–	–	60	58	192	216	233	253	214	-1.7	8.7	13	30	45	–	90	79	60
215	6.9	20	111	–	–	60	60	199	210	233	251	214	-1.6	8.7	13	30	45	–	90	78	60
300	7.2	20	108	–	–	60	62	196	210	233	251	211	-1.5	8.7	13	30	45	–	90	78	60
400	7.1	20	104	–	–	60	62	197	210	238	251	210	-1.4	8.7	13	30	45	–	90	79	60
5:05	7.1	20	104	–	–	60	57	196	211	229	252	211	-1.4	8.7	13	30	45	–	90	79	60
6:04	7.3	20	105	–	–	60	59	198	210	230	252	211	-1.4	8.6	13	30	45	–	90	78	60
7:10	7.3	20	103	–	–	60	64	195	210	227	251	211	-1.7	8.6	13	30	45	–	90	79	60
8:05	7.4	20	104	–	–	60	57	196	210	227	250	210	-1.4	8.7	13	30	45	–	90	78	60
9:05	7.4	20	106	–	–	60	59	192	210	231	253	211	-1.6	8.7	13	30	45	–	90	78	60
10:05	7.3	20	107	–	–	60	57	198	210	231	254	210	-1.4	8.7	13	30	45	–	90	78	60
11:38	7.6	20	112	–	–	60	58	198	211	229	253	211	-1.58	8.6	13	30	45	–	90	80	60
1300	7.6	20	112	–	–	60	61	198	211	227	256	211	-1.4	8.6	12	30	45	–	90	83	60
1400	7.5	20	112	–	–	60	60	199	211	226	256	211	-1.4	8.6	13	30	45	–	90	84	60
1502	7.7	20	107	–	–	60	58	198	211	227	256	211	-1.5	8.6	12	30	45	–	90	85	60
1600	7.6	20	103	–	–	60	60	196	211	236	256	211	-1.5	8.5	13	30	45	–	90	85	60
1721	7.6	20	99	–	–	60	62	198	211	228	258	211	-1.4	8.4	13	30	45	–	90	86	60
1400	7.6	20	102	–	–	60	57	199	211	228	251	211	-1.5	8.4	13	30	45	–	90	86	60
1857	7.6	20	103	–	–	60	60	199	211	228	251	211	-1.4	8.4	13	30	45	–	90	84	60
2000	7.7	20	106	–	–	60	56	200	211	231	252	212	-1.6	8.4	13	30	45	–	90	82	60
2100	7.9	20	107	–	–	60	57	199	211	230	251	211	-1.6	8.4	12	30	45	–	90	80	60
2200	7.9	20	108	–	–	60	57	199	211	228	250	212	-1.6	8.4	12	30	45	–	90	79	60
2303	8.0	20	111	–	–	60	57	197	211	229	249	212	-1.4	8.4	12	30	45	–	90	79	60

Harrisonburg-Rockingham Regional Sewer Authority
K-S Biosolids drying System 00571

Operators Log Sheet

Komline-Sanderson
12 Holland Ave Peapack, NJ 07977-0287
908-234-1000 Fax: 908-234-8487
www.komline.com

Date: 10-28-19 Operators: 12-7 / 8-9 / 4-12 / MS / BSS

Time	DRYER FEED HOPPER H-1					DRYER - DRY-01									Discharge and Cooling Conveyors						
	Silo level	Feed Pump PCP-1		Feed Pump PCP-2		Motor		Dry Bed Temperatures				Dryer Exhaust		Weir Level	RV-1	CV-1	CV-2	CV-3	Water	Product	RV-2
	LT-2111	Speed 0-100%	Pressure PIT-2106	Speed 0-100%	Pressure PIT-2105	Speed &	Amps	Bed 1 TE-3002	Bed 2 TE-3006	Bed 3 TE-3008	Bed 4 TE-3007	TT-5000	PIT-3003		Speed 0-100%	Speed 0-100%	Speed 0-100%	Speed 0-100%	Flow FI-4001	Temp TT-4009	Speed 0-100%
	Feet	Hz	PSIG	Hz	PSIG	Hz	Amps	°F	°F	°F	°F	°F	in. WC	in.	Hz	Hz	Hz	%	GPM	°F	Hz
1:00	8.1	20	114	–	–	60	65	197	211	224	247	212	-2.0	8.4	12	30	45	–	90	79	60
2:00	8.3	20	113	–	–	60	57	197	211	222	244	212	-2.0	8.6	12	30	45	–	90	79	60
3:02	8.3	20	109	–	–	60	57	194	210	225	247	212	-1.8	8.6	13	30	45	–	90	80	60
4:10	8.4	20	116	–	–	60	64	195	210	224	249	212	-2.0	8.6	12	30	45	–	90	79	60
5:02	8.2	20	101	–	–	60	56	193	211	230	252	212	-2.1	8.5	13	30	45	–	90	79	60
6:05	8.2	20	99	–	–	59	57	194	211	228	251	212	-1.9	8.5	12	30	45	–	90	79	60
7:10	8.5	20	104	–	–	60	60	197	211	227	250	212	-1.8	8.5	12	30	45	–	90	79	60
9:30	8.2	20	107	–	–	59	60	194	211	225	247	212	-2.0	8.3	13	30	45	–	90	79	60
11:32	7.5	20	112	–	–	60	58	189	211	224	246	212	-1.6	8.9	13	30	45	–	90	78	60
12:45	7.7	20	114	–	–	60	57	196	211	229	249	212	-1.6	9.0	13	30	45	–	90	77	60
13:59	7.6	20	118	–	–	60	61	195	211	232	254	212	-1.6	9.0	13	30	45	–	90	78	60
15:47	7.3	20	119	–	–	60	62	198	211	222	248	212	-1.7	8.6	13	30	45	–	90	79	60
17:03	7.3	20	111	–	–	60	57	193	211	221	245	212	-1.6	9.1	13	30	45	–	90	81	60
17:59	7.1	20	100	–	–	60	57	196	211	223	247	212	-1.8	9.1	13	30	45	–	90	81	60
19:00	7.5	20	97	–	–	60	56	191	211	230	254	212	-1.7	9.1	13	30	45	–	90	79	60
19:58	6.8	20	96	–	–	60	57	194	211	228	255	212	-1.7	8.5	13	30	45	–	90	77	60
21:13	6.4	20	96	–	–	60	64	194	211	222	249	212	-1.6	8.5	12	30	45	–	90	78	60
22:01	6.5	20	96	–	–	60	63	191	211	221	245	212	-1.7	8.7	13	30	45	–	90	79	60
23:14	6.7	20	99	–	–	60	57	190	211	219	244	212	-1.6	9.1	13	30	45	–	90	80	60

KOMLINE-SANDERSON ENGINEERING CORPORATION

00571 - Operator Data Sheets - Page 1 - Rev D

7:\Operations Shared\Process & Instrument Equipment Manuals\Dryer Building\Komline Dryer\Komline Dryer Operator Log Sheets

Harrisonburg-Rockingham Regional Sewer Authority
K•S Biosolids drying System 00571

Operators Log Sheet

Komline-Sanderson
12 Holland Av Peapack, NJ 07977-0257
908-234-1000 Fax: 908-234-0487
www.komline.com

Date: 10-29-19 Operators: 12-7 / 8-4 / 4-12 WS / AM / ATB

Time	DRYER FEED HOPPER H-1					DRYER - DRY-01										Discharge and Cooling Conveyors						
	Silo level	Feed Pump PCP-1		Feed Pump PCP-2		Motor		Dry Bed Temperatures				Dryer Exhaust		Weir Level	RV-1	CV-1	CV-2	CV-3	Water	Product	RV-2
	LT-2111	Speed 0-100%	Pressure PIT-2108	Speed 0-100%	Pressure PIT-2105	Speed &	Amps	Bed 1 TE-3002	Bed 2 TE-3005	Bed 3 TE-3006	Bed 4 TE-3007	TT-5000	PIT-3003		Speed 0-100%	Speed 0-100%	Speed 0-100%	Speed 0-100%	Flow FI-4001	Temp TT-4009	Speed 0-100%
	Feet	Hz	PSIG	Hz	PSIG	Hz	Amps	°F	°F	°F	°F	°F	in. WC	in.	Hz	Hz	Hz	%	GPM	°F	Hz
12:52	6.6	20	100	–	–	60	62	188	211	217	248	212	-2.1	9.2	13	30	45	–	90	79	60
2:00	5.4	20	103	–	–	60	62	184	211	215	249	211	-1.9	9.2	12	30	45	–	90	78	60
2:51	5.7	20	96	–	–	60	62	187	211	214	245	211	-2.0	9.3	12	30	45	–	90	78	60
4:05	5.7	19	91	–	–	60	63	176	211	216	247	211	-2.1	9.3	13	30	45	–	90	78	60
5:05	6.0	20	90	–	–	60	60	184	211	215	247	211	-2.3	9.8	12	30	45	–	90	78	60
6:02	5.0	20	91	–	–	60	62	183	211	215	243	212	-1.9	10.1	12	30	45	–	90	78	60
7:00	5.2	20	93	–	–	60	62	181	211	216	241	212	-2.0	10.4	13	30	45	–	90	78	60
* 8:30	8.0	0	38	0	8	60	53	212	222	278	275	211	-2.1	11.1	13	30	45	–	90	75	60

KOMLINE-SANDERSON ENGINEERING CORPORATION

D0571 - Operator Data Sheets - Page 1 - Rev D

* Shutdown mode started at 8:30 am

P:\Operations Shared\Process & Instrument Descriptions\Dryer Building\Komline Dryer\Komline Dryer Operator Log Sheets

Harrisonburg-Rockingham Regional Sewer Authority
K-S Biosolids drying System 00571

Operators Log Sheet

Komline-Sanderson
12 Holland Ave Peapack, NJ 07977-0257
908-234-1000 Fax: 908-234-9487
www.komline.com

Date: 10-31-19 Operators: 4-12 BSS

Time	DRYER FEED HOPPER R-1					DRYER - DRY-01									Discharge and Cooling Conveyors						
	Silo level	Feed Pump PCP-1		Feed Pump PCP-2		Motor		Dry Bed Temperatures				Dryer Exhaust		Weir Level	RV-1	CV-1	CV-2	CV-3	Water	Product	RV-2
	LT-2111	Speed 0-100%	Pressure PIT-2105	Speed 0-100%	Pressure PIT-2105	Speed &	Amps	Bed 1 TE-3002	Bed 2 TE-3006	Bed 3 TE-3006	Bed 4 TE-3007	TT-3000	PIT-3003		Speed 0-100%	Speed 0-100%	Speed 0-100%	Speed 0-100%	Flow FI-4001	Temp TT-4009	Speed 0-100%
	Feet	Hz	PSIG	Hz	PSIG	Hz	Amps	°F	°F	°F	°F	°F	in. WC	in.	Hz	Hz	Hz	%	GPM	°F	Hz
0930	7.7	~~18~~	—	18	66	60	50	188	211	257	225	219	-3.5	10.5	12	30	45	~~60~~	90	72	60
1005	8.3	—	—	20	64	60	58	192	210	291	266	216	-2.8	10.0	13	30	45	—	90	72	60
1100	8.3	—	—	22	64	60	53	188	217	306	294	212	-1.8	10.0	13	30	45	—	90	74	60
1230	8.5	—	—	24	61	60	53	192	212	306	300	215	-2.8	10.0	13	30	45	—	90	75	60
1346	8.7	—	—	16	59	60	56	195	211	290	285	211	-3.3	10.0	13	30	45	—	90	77	60
1501	8.6	—	—	16	61	60	58	197	251	301	298	211	-3.5	10.0	13	30	45	—	90	80	60
1541	7.9	—	—	18	63	60	60	198	210	298	291	210	-3.6	10.0	13	30	45	—	90	82	60
1657	7.4	—	—	17	63	60	62	193	211	291	292	211	-3.3	10.0	12	30	45	—	90	83	60
1807	7.8	—	—	17	62	60	61	194	210	291	291	210	-3.3	10.0	13	30	45	—	90	84	60
1916	7.7	—	—	18	62	60	62	195	210	240	291	210	-3.3	9.8	12	30	45	—	90	82	60
1959	8.1	—	—	19	62	60	59	193	210	291	256	210	-3.4	9.8	12	30	45	—	90	82	60
2100	8.0	—	—	19	62	60	60	195	211	294	299	210	-3.6	9.8	13	30	45	—	90	79	60
2200	8.0	—	—	20	66	60	61	196	210	291	287	210	-3.4	9.8	12	30	45	—	90	78	60
2317	8.0	—	—	20	68	60	59	194	210	291	293	210	-4.0	9.8	13	30	45	—	90	79	60

Harrisonburg-Rockingham Regional Sewer Authority
K•S Biosolids drying System 00571

Operators Log Sheet

Komline-Sanderson
12 Holland Av Peapack, NJ 07977-0257
908-234-1000 Fax: 908-234-0487
www.komline.com

Date: 11-1-19 Operators: 12-8 / 8-4 / 4-12 / TB / MS / JC / BSS

Time	DRYER FEED HOPPER H-1					DRYER - DRY-01									Discharge and Cooling Conveyors						
	Silo level	Feed Pump PCP-1		Feed Pump PCP-2		Motor		Dry Bed Temperatures				Dryer Exhaust		Weir Level	RV-1	CV-1	CV-2	CV-3	Water	Product	RV-2
	LT-2111	Speed 0-100%	Pressure PIT-2106	Speed 0-100%	Pressure PIT-2105	Speed &	Amps	Bed 1 TE-3002	Bed 2 TE-3005	Bed 3 TE-3006	Bed 4 TE-3007	TT-3000	PIT-3003		Speed 0-100%	Speed 0-100%	Speed 0-100%	Speed 0-100%	Flow FI-4001	Temp TT-4000	Speed 0-100%
	Feet	Hz	PSIG	Hz	PSIG	Hz	Amps	°F	°F	°F	°F	°F	In. WC	In.	Hz	Hz	Hz	%	GPM	°F	Hz
1248	8.4	–	–	20	67.6	60	73	180	210	214	234	210	-4.0	9.9	12	30	45	–	90	81	60
2:05	8.1	–	–	19	68.6	60	74	176	210	213	222	210	-3.9	10.2	13	30	45	–	90	80	60
3:00	8.2	–	–	19	70.5	60	72	181	210	213	219	210	-4.1	10.3	12	30	45	–	90	80	60
4:00	8.2	–	–	18	70.9	60	67	181	211	214	217	210	-4.0	10.2	13	30	45	–	90	79	60
5:00	8.4	–	–	18	73.6	60	74	183	211	214	218	210	-4.0	10.3	13	30	45	–	90	79	60
6:00	8.3	–	–	18	73.7	60	66	178	211	215	218	210	-4.2	10.3	12	30	45	–	90	78	60
7:00	8.7	–	–	18	75	60	67	179	211	216	220	210	-4.2	10.3	1	30	45	–	90	78	60
0830	8.6	–	–	17	78	60	64	186	211	216	221	210	-4.2	11.9	13	30	45	–	90	77	60
0930	7.8	–	–	17	79	60	66	188	211	219	226	209	-4.1	11.9	13	30	45	–	90	77	60
1023	8.0	–	–	17	80	60	63	195	211	225	233	209	-4.2	11.5	13	30	45	–	90	76	60
1142	8.5	–	–	17	79	60	63	185	211	232	241	209	-3.9	10.6	13	30	45	–	90	76	60
1246	8.7	–	–	17	79	60	65	191	211	235	255	209	-3.9	10.4	13	30	45	–	90	77	60
1338	7.5	–	–	18	78	60	58	192	211	253	268	209	-3.6	10.0	12	30	45	–	90	78	60
1437	7.1	–	–	18	81	60	57	183	211	246	274	209	-3.7	9.6	12	30	45	–	90	78	60
1536	7.5	–	–	22	83	60	59	174	211	235	270	209	-3.7	9.4	13	30	45	–	90	79	60
1702	8.0	–	–	22	70	60	62	166	211	222	259	210	-3.8	9.4	12	30	45	–	90	82	60
1754	7.4	–	–	22	68	60	58	170	211	216	252	210	-3.5	9.4	13	30	45	–	90	82	60
1950	6.0	–	–	21	68	60	58	171	211	215	240	210	-3.5	9.6	12	30	45	–	90	82	60
2114	6.2	–	–	21	66	60	59	177	211	215	237	210	-3.5	9.6	13	30	45	–	90	81	60
2204	5.4	–	–	21	67	60	60	179	211	214	235	210	-3.5	9.6	13	30	45	–	90	80	60
2303	4.9	–	–	21	68	60	60	175	211	214	233	210	-3.6	9.8	12	30	45	–	90	80	60

Harrisonburg-Rockingham Regional Sewer Authority
K-S Biosolids drying System 00571

Operators Log Sheet

Komline-Sanderson
12 Holland Ave Peapack, NJ 07977-0257
908-234-1000 Fax: 908-234-0487
www.komline.com

Date: 11-2-19 Operators: M-N / N-M Edm

Time	DRYER FEED HOPPER H-1					DRYER - DRY-01									Discharge and Cooling Conveyors						
	Silo level	Feed Pump PCP-1		Feed Pump PCP-2		Motor		Dry Bed Temperatures				Dryer Exhaust		Weir Level	RV-1	CV-1	CV-2	CV-3	Water	Product	RV-2
	LT-2111	Speed 0-100%	Pressure PIT-2106	Speed 0-100%	Pressure PIT-2105	Speed &	Amps	Bed 1 TE-3002	Bed 2 TE-3005	Bed 3 TE-3006	Bed 4 TE-3007	TT-5000	PIT-3003		Speed 0-100%	Speed 0-100%	Speed 0-100%	Speed 0-100%	Flow FI-4001	Temp TT-4009	Speed 0-100%
	Feet	Hz	PSIG	Hz	PSIG	Hz	Amps	°F	°F	°F	°F	°F	In. WC	In.	Hz	Hz	Hz	%	GPM	°F	Hz
0025	4.2	—	—	19	67	60	64	180	211	214	232	210	~~-3.8~~	9.8	13	30	45	—	90	79	60
153	4.1	—	—	19	84	60	60	181	211	215	239	210	-3.8	10.2	12	30	45	—	90	78	60
306	4.6	—	—	19	86	60	59	174	211	220	252	210	-3.7	10.1	12	30	45	—	90	78	60
417	4.4	—	—	19	57	60	65	182	211	219	256	210	-3.4	9.3	12	30	45	—	90	77	60
511	4.4	—	—	19	55	60	58	184	211	216	251	210	-3.3	9.1	12	30	45	—	90	79	60
605	4.4	—	—	19	56	60	59	181	211	218	248	210	-3.4	9.1	13	30	45	—	90	80	60
706	4.2	—	—	19	63	60	63	180	211	219	249	210	-3.4	9.1	13	30	45	—	90	81	60
804	4.3	—	—	19	67	59	57	184	211	224	250	210	-3.0	8.7	13	30	45	—	90	80	60
904	3.9	—	—	19	75	60	57	186	211	231	251	210	-3.4	7.9	12	30	45	—	90	80	60
1000	4.2	—	—	19	78	60	58	181	211	224	243	210	-3.4	7.8	13	30	45	—	90	81	60
1122	4.0	—	—	19	76	60	59	183	211	225	239	211	-3.6	8.3	13	30	45	—	90	82	60
1223	3.8	—	—	19	76	60	55	186	211	233	245	211	-3.1	8.4	13	30	45	—	90	81	60
1331	4.0	—	—	19	73	60	59	178	211	240	254	211	-3.0	7.8	13	30	45	—	90	79	60
1455	4.0	—	—	19	72	60	60	189	211	233	253	211	-3.1	7.8	13	30	45	—	90	80	60
1540	40	—	—	19	70	60	61	185	211	228	248	211	-3.0	7.2	13	30	45	—	90	80	60
1648	4.1	—	—	19	62	60	54	187	211	225	244	211	-3.0	7.2	13	30	45	—	90	80	60
1738	4.1	—	—	19	62	60	60	184	211	225	243	211	-3.1	7.2	13	30	45	—	90	79	60
1835	4.2	—	—	19	59	60	60	184	211	228	243	211	-3.1	7.2	13	30	45	—	90	79	60
1921	4.1	—	—	19	58	60	60	183	211	229	245	211	-3.0	7.2	13	30	45	—	90	79	60
2056	4.3	—	—	19	61	60	53	186	211	229	246	211	-3.2	7.2	13	30	45	—	90	79	60
2216	4.3	—	—	19	60	60	54	183	211	228	246	211	-3.0	7.2	13	30	45	—	90	79	60
2238	4.5	—	—	19	62	60	54	183	211	225	245	211	-3.0	7.2	13	30	45	—	90	79	60
2334	4.4	—	—	19	63	60	55	180	211	226	244	211	-2.9	7.2	13	30	45	—	90	79	60

KOMLINE-SANDERSON ENGINEERING CORPORATION

00571 - Operator Data Sheets - Page 1 - Rev D

10

Harrisonburg-Rockingham Regional Sewer Authority
K-S Biosolids drying System 00571

Operators Log Sheet

Komline-Sanderson
12 Holland Av Peapack, NJ 07977-0257
908-234-1060 Fax: 908-234-9487
www.komline.com

Date: 11-3-19 Operators: M-N / N-M

Time	DRYER FEED HOPPER H-1					DRYER - DRY-01									Discharge and Cooling Conveyors						
	Silo level	Feed Pump PCP-1		Feed Pump PCP-2		Motor		Dry Bed Temperatures				Dryer Exhaust		Weir Level	RV-1	CV-1	CV-2	CV-3	Water	Product	RV-2
	LT-2111	Speed 0-100%	Pressure PIT-2106	Speed 0-100%	Pressure PIT-2105	Speed &	Amps	Bed 1 TE-3002	Bed 2 TE-3006	Bed 3 TE-3006	Bed 4 TE-3007	TT-6000	PIT-3008		Speed 0-100%	Speed 0-100%	Speed 0-100%	Speed 0-100%	Flow FI-4001	Temp TT-4000	Speed 0-100%
	Feet	Hz	PSIG	Hz	PSIG	Hz	Amps	°F	°F	°F	°F	°F	in. WC	in.	Hz	Hz	Hz	%	GPM	°F	Hz
0044	4.5	–	–	19	62	60	59	185	211	226	243	211	-3.2	7.2	13	30	45	–	90	79	60
143	4.7	–	–	19	64	60	54	180	211	226	244	212	-3.2	7.2	13	30	45	–	90	79	60
215	4.6	–	–	19	65	60	53	185	211	228	246	212	-3.3	7.2	13	30	45	–	90	79	60
309	4.7	–	–	19	67	60	55	185	211	230	247	212	-2.8	7.2	13	30	45	–	90	79	60
416	4.6	–	–	19	70	59	59	190	211	231	249	212	-3.1	7.2	12	30	45	–	90	78	60
510	4.8	–	–	19	70	60	54	184	211	231	248	212	-2.7	7.2	13	30	45	–	90	78	60
600	4.8	–	–	19	70	60	61	184	211	229	248	212	-3.0	7.2	13	30	45	–	90	78	60
710	4.9	–	–	19	70	60	55	191	211	231	247	212	-2.9	7.2	12	30	45	–	90	79	60
815	5.0	–	–	19	69	60	56	185	211	234	250	212	-2.9	8.2	13	30	45	–	90	79	60
906	4.9	–	–	19	69	60	61	175	211	238	258	212	-3.1	8.9	13	30	45	–	90	78	60
1030	4.8	–	–	19	61	60	57	178	211	267	271	212	-3.3	9.5	13	30	45	–	90	77	60
1106	5.1	–	–	19	61	60	60	178	211	274	278	212	-3.1	9.5	13	30	45	–	90	77	60
1239	4.9	–	–	19	63	60	58	176	211	282	286	212	-3.2	10.0"	13	30	45	–	90	76	60
1332	5.0	–	–	19	64	60	56	178	211	271	286	212	-3.0	9.2"	13	30	45	–	90	76	60
1438	5.2	–	–	19	65	60	58	183	211	234	278	212	-3.0	9.2"	13	30	45	–	90	76	60
1530	5.3	–	–	19	67	60	60	184	211	220	267	211	-3.0	9.2"	13	30	45	–	90	77	60
1627	5.3	–	–	19	67	60	61	182	211	215	256	211	-3.1	9.2"	13	30	45	–	90	78	60
1729	5.1	–	–	19	68	60	58	185	211	219	252	211	-3.5	9.4"	13	30	45	–	90	79	60
1825	5.2	–	–	19	67	60	61	184	211	219	254	211	-3.3	9.4"	13	30	45	–	90	78	60
1915	5.4	–	–	19	66	60	59	180	211	219	255	211	-3.4	9.2"	13	30	45	–	90	78	60
2025	5.5	–	–	19	64	60	60	180	211	218	255	211	-3.2	9.2"	13	30	45	–	90	78	60
2118	5.5	–	–	19	63	60	60	184	211	219	253	211	-3.3	8.8"	13	30	45	–	90	79	60
2221	5.6	–	–	19	64	60	59	184	211	219	250	211	-3.3	8.8"	13	30	45	–	90	79	60
KOMLINE-SANDERSON ENGINEERING CORPORATION																					
2310	5.7	–	–	19	64	60	58	182	211	221	248	211	-2.8	8.8"	13	30	45	–	90	80	60

Harrisonburg-Rockingham Regional Sewer Authority
K-S Biosolids drying System 00571

Operators Log Sheet

Komline-Sanderson
12 Holland Ave Peapack, NJ 07977-0257
908-234-1000 Fax: 908-234-9457
www.komline.com

Date: 11-4-19 Operators: 12-8 EBM | 8-4 MTB | 4-12 BAA

Time	DRYER FEED HOPPER H-1					DRYER - DRY-01									Discharge and Cooling Conveyors						
	Silo level	Feed Pump PCP-1		Feed Pump PCP-2		Motor		Dry Bed Temperatures				Dryer Exhaust		Weir Level	RV-1	CV-1	CV-2	CV-3	Water	Product	RV-2
	LT-2111	Speed 0-100%	Pressure PIT-2108	Speed 0-100%	Pressure PIT-2105	Speed &	Amps	Bed 1 TE-3002	Bed 2 TE-3005	Bed 3 TE-3006	Bed 4 TE-3007	TT-8000	PIT-3003		Speed 0-100%	Speed 0-100%	Speed 0-100%	Speed 0-100%	Flow FI-4001	Temp TT-4009	Speed 0-100%
	Feet	Hz	PSIG	Hz	PSIG	Hz	Amps	°F	°F	°F	°F	°F	In. WC	In.	Hz	Hz	Hz	%	GPM	°F	Hz
0039	5.8	–	–	19	63	60	62	180	211	221	249	211	-3.0	8.8	13	30	45	–	90	80	60
139	5.9	–	–	19	65	60	60	178	211	226	250	211	-2.9	8.6	13	30	45	–	90	80	60
248	5.7	–	–	19	65	59	62	178	211	226	247	211	-3.1	8.4	12	30	45	–	90	80	60
318	5.8	–	–	19	66	60	57	179	211	224	246	211	-3.0	8.4	13	30	45	–	90	80	60
415	5.8	–	–	19	66	60	57	183	211	223	244	211	-2.9	8.4	13	30	45	–	90	81	60
512	5.8	–	–	19	67	60	56	184	211	223	243	211	-3.3	8.4	13	30	45	–	90	81	60
623	5.9	–	–	19	67	60	63	177	211	228	246	212	-3.4	8.4	13	30	45	–	90	80	60
731	6.1	–	–	19	70	60	57	183	211	232	249	212	-3.4	8.4	13	30	45	–	90	80	60
1115	5.5	–	–	19	62	60	58	183	211	224	241	212	-2.9	8.2	12	30	45	–	90	80	60
1506	4.9	–	–	19	72	60	61	177	211	230	250	212	-3.0	8.3	13	30	45	–	90	78	60
1626	4.2	–	–	19	66	60	59	179	211	229	249	212	-3.3	8.1	13	30	45	–	90	78	60
1730	3.8	–	–	19	65	60	55	175	211	223	244	212	-3.2	8.1	13	30	45	–	90	78	60
1821	3.5	–	–	19	63	60	60	178	211	222	241	212	-3.1	8.1	13	30	45	–	90	78	60
1912	3.4	–	–	19	64	60	59	179	211	222	240	212	-3.1	8.3	13	30	45	–	90	79	60
2003	3.2	–	–	19	60	60	56	180	211	224	242	212	-3.1	8.6	13	30	45	–	90	79	60
2115	2.5	–	–	17	51	60	56	182	211	229	246	212	-3.2	8.6	13	30	45	–	90	79	60
2205	2.5	–	–	17	51	60	56	184	211	230	248	212	-3.1	8.6	13	30	45	–	90	78	60
2330	2.4	–	–	17	50	60	58	182	211	230	249	212	-3.2	8.8	13	30	45	–	90	78	60

KOMLINE-SANDERSON ENGINEERING CORPORATION

00571 - Operator Data Sheets - Page 1 - Rev D

F:\Operations Share\Process & Instrument Replacement Manual\Dryer Building\Komline Dryer\Komline Dryer Operator Log Sheets

Harrisonburg-Rockingham Regional Sewer Authority
K•S Biosolids drying System 00571

Operators Log Sheet

Date: 11/05/2019

Operators: 12-8 Eyen | 8-4 M.S. | 4-12 BM

Time	DRYER FEED HOPPER H-1					DRYER - DRY-01									Discharge and Cooling Conveyors						
	Silo level	Feed Pump PCP-1		Feed Pump PCP-2		Motor		Dry Bed Temperatures				Dryer Exhaust		Weir Level	RV-1	CV-1	CV-2	CV-3	Water	Product	RV-2
	LT-2111	Speed 0-100%	Pressure PIT-2106	Speed 0-100%	Pressure PIT-2105	Speed &	Amps	Bed 1 TE-3002	Bed 2 TE-3006	Bed 3 TE-3008	Bed 4 TE-3007	TT-5000	PIT-3003		Speed 0-100%	Speed 0-100%	Speed 0-100%	Speed 0-100%	Flow FI-4001	Temp TT-4C09	Speed 0-100%
	Feet	Hz	PSIG	Hz	PSIG	Hz	Amps	°F	°F	°F	°F	°F	in. WC	in.	Hz	Hz	Hz	%	GPM	°F	Hz
0043	2.6	—	—	15	46	60	55	184	211	225	242	213	-3.2	7.8	12	30	45	—	90	79	60
153	2.7	—	—	15	46	60	54	191	211	228	242	213	-3.1	7.8	13	30	45	—	90	79	60
304	2.6	—	—	15	51	59	57	190	211	239	251	213	-3.1	7.6	13	30	45	—	90	79	60
419	2.7	—	—	15	55	60	60	191	211	250	260	213	-3.3	6.8	12	30	45	—	90	78	60
515	2.5	—	—	15	58	60	58	196	211	250	263	213	-3.2	5.9	13	30	45	—	90	78	60
606	2.5	—	—	15	59	60	54	194	211	244	255	212	-3.5	5.9	13	30	45	—	90	78	60
724	2.4	—	—	15	5.9	60	67	180	211	241	247	212	-3.4	5.9	12	30	45	—	90	79	60
0850	2.8"	13	77	~~0~~	—	60	60	196	211	234	240	212	-3.4	6.6	13	30	45	—	90	77	60
1050	3.4	13	74	—	—	60	57	194	211	239	245	212	-3.0	6.6	13	30	45	—	90	76	60
1140	3.6	13	73	—	—	60	58	193	211	239	246	212	-3.3	6.6	13	30	45	—	90	76	60
1350	4.7	13	69	—	—	60	66	196	211	239	246	212	-3.3	7.1	13	30	45	—	90	75	60
1540	5.5	13	73	—	—	60	58	195	211	240	247	212	-3.2	6.9	13	30	45	—	90	75	60
1635	5.6	13	78	—	—	60	58	196	212	237	250	212	-0.3	6.3"	13	30	45	—	90	74	60
1727	5.8	13	82	—	—	60	60	199	211	236	243	212	-3.5	6.3"	13	30	45	—	90	73	60
1859	6.2	13	86	—	—	60	60	197	211	236	242	212	-3.5	6.3"	13	30	45	—	90	73	60
2053	6.7	13	88	—	—	59	68	196	211	238	243	212	-3.5	6.3"	13	30	45	—	90	73	60
2120	6.8	13	89	—	—	60	58	196	211	238	244	212	-3.6	6.3"	13	30	45	—	90	73	60
2222	7.2	13	93	—	—	60	57	197	211	242	246	212	-3.5	6.3"	13	30	45	—	90	74	60
2315	7.4	13	93	—	—	60	55	200	211	245	250	212	-3.4	6.1"	13	30	45	—	90	73	60

KOMLINE-SANDERSON ENGINEERING CORPORATION

D0571 - Operator Data Sheets - Page 1 - Rev D

P:\Operations Shared\Process & Instrument Equipment Manuals\Dryer Building\Komline Dryer\Komline Dryer Operator Log Sheets

①

Harrisonburg-Rockingham Regional Sewer Authority
K-S Biosolids drying System 00571

Date: 11-6-19 Operator: 12-8 Eden | 8-4 MS | 4-12 BM

Operators Log Sheet

Time	DRYER FEED HOPPER #1					DRYER - DRY-01									Discharge and Cooling Conveyors						
	Silo level	Feed Pump PCP-1		Feed Pump PCP-2		Motor		Dry Bed Temperatures				Dryer Exhaust		Weir Level	RV-1	CV-1	CV-2	CV-3	Water	Product	RV-2
	LT-2111	Speed 0-100%	Pressure PIT-2106	Speed 0-100%	Pressure PIT-2106	Speed &	Amps	Bed 1 TE-3002	Bed 2 TE-3005	Bed 3 TE-3006	Bed 4 TE-3007	TT-5000	PIT-3003		Speed 0-100%	Speed 0-100%	Speed 0-100%	Speed 0-100%	Flow FI-4001	Temp TT-4009	Speed 0-100%
	Feet	Hz	PSIG	Hz	PSIG	Hz	Amps	°F	°F	°F	°F	°F	in. WC	in.	Hz	Hz	Hz	%	GPM	°F	Hz
0042	7.8	14	96	—	—	60	63	199	211	251	256	213	-3.8	4.7	12	30	45	—	90	73	60
142	8.0	16	101	—	—	59	59	198	211	254	260	213	-3.0	4.7	13	30	45	—	90	73	60
230	8.2	18	104	—	—	60	65	193	211	254	261	214	-1.6	4.4	13	30	45	—	90	73	60
311	8.1	18	106	—	—	60	66	192	211	248	256	213	-3.4	4.4	12	30	45	—	90	73	60
405	8.1	18	111	—	—	60	61	193	211	237	248	213	-3.4	4.2	13	30	45	—	90	73	60
508	8.3	18	114	—	—	60	64	183	211	224	230	212	-3.4	7.9	13	30	45	—	90	75	60
610	8.5	18	116	—	—	60	57	185	211	227	241	213	-3.6	8.5	12	30	45	—	90	74	60
721	8.6	19	120	—	—	60	57	190	212	238	249	214	-0.2	8.6	13	30	45	—	90	74	60
0844	8.6	~~20~~	—	20	66	60	65	191	212	238	252	215	-2.3	7.6	13	30	45	—	90	74	60
0954	8.5	—	—	20	88	60	60	186	211	234	251	215	-3.2	8.5	13	30	45	—	90	77	60
1138	8.5	—	—	22	87	60	60	194	211	255	262	214	-3.6	8.5	13	30	45	—	90	78	60
1400	8.1	~~22~~	~~120~~	~~88~~	—	60	54	196	211	288	293	214	-3.5	7.7	12	30	45	—	90	77	60
1500	7.5	21	124	—	—	60	56	194	211	278	290	213	-3.4	7.3	13	30	45	—	90	76	60
1645	7.0	21	128	—	—	60	61	194	211	244	270	214	-3.3	7.4	13	30	45	—	90	80	60
1725	6.7	21	127	—	—	60	65	192	211	237	261	214	-3.3	7.4	13	30	45	—	90	80	60
1815	6.6	20	126	—	—	60	55	190	211	234	254	214	-3.4	7.4	13	30	45	—	90	80	60
1915	6.2	20	126	—	—	60	62	196	211	241	256	214	-3.2	7.4	13	30	45	—	90	80	60
2029	6.0	19	120	—	—	60	59	192	211	249	262	213	-3.3	7.4	13	30	45	—	90	80	60
2122	5.7	19	106	—	—	60	55	192	211	252	265	213	-3.4	7.2	13	30	45	—	90	80	60
2224	5.7	19	96	—	—	60	55	195	211	251	266	213	-3.1	6.6	13	30	45	—	90	79	60
2328	5.6	19	98	-	-	60	59	196	211	247	264	213	-3.1	6.6	13	30	45	—	90	80	60

ROMLINE-SANDERSON ENGINEERING CORPORATION

00571 - Operator Data Sheets - Page 1 - Rev D

Harrisonburg-Rockingham Regional Sewer Authority
K•S Biosolids drying System 00571

Operators Log Sheet

Date: 11-7-19

Operators: 12-8 CBM | 8-4 MG | 4-12 BM

Time	DRYER FEED HOPPER H-1					DRYER - DRY-01									Discharge and Cooling Conveyors						
	Silo level	Feed Pump PCP-1		Feed Pump PCP-2		Motor		Dry Bed Temperatures				Dryer Exhaust		Weir Level	RV-1	CV-1	CV-2	CV-3	Water	Product	RV-2
	LT-2111	Speed 0-100%	Pressure PIT-2108	Speed 0-100%	Pressure PIT-2106	Speed &	Amps	Bed 1 TE-3002	Bed 2 TE-3005	Bed 3 TE-3006	Bed 4 TE-3007	TT-6000	PIT-3003		Speed 0-100%	Speed 0-100%	Speed 0-100%	Speed 0-100%	Flow FI-4001	Temp TT-4009	Speed 0-100%
	Feet	Hz	PSIG	Hz	PSIG	Hz	Amps	°F	°F	°F	°F	°F	in. WC	in.	Hz	Hz	Hz	%	GPM	°F	Hz
0044	5.3	19	103	—	—	60	54	196	211	244	261	214	-3.4	6.6	12	30	45	—	90	79	60
138	5.1	19	102	—	—	60	55	192	211	241	259	214	-3.1	6.4	13	30	45	—	90	79	60
230	5.1	18	100	—	—	59	56	194	211	236	255	214	-3.4	6.0	13	30	45	—	90	79	60
317	5.0	18	100	—	—	60	60	197	211	236	254	214	-3.5	5.9	13	30	45	—	90	79	60
404	5.1	18	100	—	—	60	53	196	211	238	255	214	-3.5	5.7	12	30	45	—	90	79	60
512	5.0	17	96	—	—	60	59	192	211	238	249	213	-3.6	5.3	12	30	45	—	90	79	60
623	4.8	17	91	—	—	60	61	189	211	235	243	212	-3.2	5.3	12	30	45	—	90	78	60
731	4.6	16	86	—	—	60	62	188	210	226	237	212	-3.5	5.5	13	30	45	—	90	77	60
900	4.7	16	87	—	—	60	56	194	211	221	234	213	-3.5	*6.3	13	30	45	—	90	77	60
1015	4.7	16	91	—	—	60	54	200	211	227	241	213	-3.2	6.6	13	30	45	—	90	77	60
1150	5.0	16	93	—	—	60	52	200	211	254	261	213	-3.2	5.8	13	30	45	—	90	76	60
1311	5.6	16	96	—	—	60	57	197	211	269	270	213	-3.2	5.7	13	30	45	—	90	76	60
1431	5.7	16	101	—	—	60	51	201	211	277	279	214	-3.1	5.2	13	30	45	—	90	76	60
1530	6.2	16	101	—	—	60	51	200	211	282	281	214	-3.2	5.0	13	30	45	—	90	76	60
1649	6.4	16	106	—	—	60	56	200	211	284	284	214	-3.3	4.9	13	30	45	—	90	77	60
1752	6.8	16	83	—	—	60	56	199	211	282	284	214	-3.1	4.9	13	30	45	—	90	78	60
1831	7.0	16	89	—	RUNNING PUMP #2	60	56	196	211	283	284	213	-3.2	4.9	13	30	45	—	90	78	60
1924	7.1	16	91	—		60	51	195	211	285	284	213	-3.4	4.9	13	30	45	—	90	77	60
2028	7.1	16	87	—	—	60	51	194	211	285	285	213	-3.5	4.9	13	30	45	—	90	77	60
2121	7.2	16	87	—	—	60	51	196	211	283	285	213	-3.4	4.9	13	30	45	—	90	77	60
2230	7.4	—	—	16	82	60	57	196	211	281	283	213	-3.1	4.8	13	30	45	—	90	78	60
2324	7.6	—	—	16	79	60	54	198	211	278	283	213	-3.3	4.7	13	30	45	—	90	78	60

RUNNING FEED PUMP #2

ROBILINE-SANDERSON ENGINEERING CORPORATION

D0571 - Operator Data Sheets - Page 1 - Rev 0

* - manual weir

F:\Operations Stuff\Process & Instrument Equipment Manuals\Drying Building\Komline Dryer\Komline Dryer Operator Log Sheets

Harrisonburg-Rockingham Regional Sewer Authority
K-S Biosolids drying System 00571

Date: 11-8-19 Operators: 12-8 / 8-4 / 4-12 EVM / MJ

Operators Log Sheet

Time	DRYER FEED HOPPER H-1					DRYER - DRY-01									Discharge and Cooling Conveyors						
	Silo level	Feed Pump PCP-1		Feed Pump PCP-2		Motor		Dry Bed Temperatures				Dryer Exhaust		Weir Level	RV-1	CV-1	CV-2	CV-3	Water	Product	RV-2
	LT-2111	Speed 0-100%	Pressure PIT-2106	Speed 0-100%	Pressure PIT-2105	Speed &	Amps	Bed 1 TE-3002	Bed 2 TE-3005	Bed 3 TE-3006	Bed 4 TE-3007	TT-6000	PIT-3003		Speed 0-100%	Speed 0-100%	Speed 0-100%	Speed 0-100%	Flow FI-4001	Temp TT-4009	Speed 0-100%
	Feet	Hz	PSIG	Hz	PSIG	Hz	Amps	°F	°F	°F	°F	°F	in. WC	in.	Hz	Hz	Hz	%	GPM	°F	Hz
0047	7.9	–	–	16	1L	59	58	197	211	279	262	2W	-1.5	1.6	13	30	45	–	90	77	60
146	8.0	–	–	16	81	59	59	198	211	273	241	213	-3.5	1.6	13	30	45	–	90	78	60
231	8.2	–	–	16	83	60	53	200	211	271	251	215	-0.1	4.1	13	30	45	–	90	78	60
310	8.1	–	–	18	87	60	60	1ff	211	268	215	1ff	-3.3	4.4	13	30	45	–	90	78	60
412	8.1	–	–	18	91	60	58	194	211	264	177	277	-4.4	1.1	12	30	45	–	90	78	60
509	8.2	–	–	20	96	59	61	188	211	261	211	211	-3.1	4.4	13	30	45	–	90	78	60
635	8.2	–	–	20	101	60	58	185	211	1f3	3<V	211	-3.1	4.4	12	30	45	–	90	78	60
736	8.4	–	–	20	103	60	55	187	211	239	311	211	-3.0	1.1	13	30	45	–	90	78	60
0824	8.2	–	–	20	104	60	55	184	211	229	35[	211	-2.3	11	13	30	45	–	90	78	60
1015	8.2	20	134	–	–	60	60	189	211	227	1M	2:L	-3.2	1.1	13	30	45	–	90	78	60
1337	7.6	–	–	20	104	60	55	185	211	230	2M	M	-3.0	4.4	13	30	45	–	90	77	60
1433	7.5	–	–	20	101	60	54	186	211	228	25	3.13	-3.0	4.6	13	30	45	–	90	77	60
1533	7.5	–	–	20	99	60	61	S1L	211	224	210	2V	-5.1	4.7	13	30	45	–	90	77	60
1720	7.2	–	–	20	101	60	55	180	211	223	236	1UT	-5.0	5.4	13	30	45	–	90	78	60
1835	7.3	–	–	20	103	60	58	201	211	228	259	212	-5.0	6.1	13	30	45	–	90	77	60
1929	7.2	–	–	20	106	60	54	200	211	238	1<6	1V2	-5.2	6.1	13	30	45	–	90	77	60
2032	7.3	–	–	19	108	60	53	191	211	1:11	1ett	213	-5.1	5.5	13	30	45	–	90	77	60
2133	7.2	19	140	–	–	60	54	191	211	2W	211	1V3	-5.3	4.4	13	30	45	–	90	77	60
2225	6.9	–	–	19	101	60	60	188	211	2M	1SS	213	-5.0	M	13	30	45	–	90	77	60
2320	6.8	–	–	19	97	60	60	186	211	23[	ES2	213	-4.9	1.3	13	30	45	–	90	78	60

KOMline-Sanderson Engineering Corporation

D0571 - Operator Data Sheets - Page 1 - Rev D

F:\Operations Share\Process & Instrument Equipment Manuals\Dryer Building\Komline Dryer\Komline Dryer Operator Log Sheets

Harrisonburg-Rockingham Regional Sewer Authority
K-S Biosolids drying System 00571

Date: 11-9-19 Operators: M-N / N-M BSS / TAS

Operators Log Sheet

Time	DRYER FEED HOPPER H-1					DRYER - DRY-01									Discharge and Cooling Conveyors						
	Silo level	Feed Pump PCP-1		Feed Pump PCP-2		Motor		Dry Bed Temperatures				Dryer Exhaust		Weir Level	RV-1	CV-1	CV-2	CV-3	Water	Product	RV-2
	LT-2111	Speed 0-100%	Pressure PIT-2106	Speed 0-100%	Pressure PIT-2106	Speed &	Amps	Bed 1 TE-3002	Bed 2 TE-3005	Bed 3 TE-3006	Bed 4 TE-3007	TT-3000	PIT-3003		Speed 0-100%	Speed 0-100%	Speed 0-100%	Speed 0-100%	Flow FI-4001	Temp TT-4009	Speed 0-100%
	Feet	Hz	PSIG	Hz	PSIG	Hz	Amps	°F	°F	°F	°F	°F	in.WC	in.	Hz	Hz	Hz	%	GPM	°F	Hz
0114	7.3	-	-	19	88.9	60	59	183	211	225	244	210	-3.8	3.4	13	30	45	-	90	79	60
0207	7.0	-	-	19	89.4	60	57	182	211	223	240	209	-4.9	3.7	12	30	45	-	90	79	60
0308	6.7	-	-	20	90.1	60	62	173	211	220	236	213	-4.5	4.1	12	30	45	-	90	78	60
0350	6.6	-	-	20	90.1	60	54	176	211	219	237	213	-4.7	4.4	12	30	45	-	90	78	60
0509	6.2	-	-	19	89.0	60	55	168	211	219	227	213	-4.2	4.3	13	30	45	-	90	77	60
0614	6.1	-	-	19	89.4	60	54	177	211	218	229	213	-4.3	3.4	13	30	45	-	90	77	60
0703	5.8	-	-	19	88.9	60	55	173	211	219	229	213	-3.8	5.7	13	30	45	-	90	77	60
0812	5.7	-	-	19	85.9	60	61	173	211	220	227	212	-4.5	5.9	12	30	45	-	90	76	60
0903	5.8	-	-	19	85.6	60	57	172	211	221	229	213	-4.1	5.9	12	30	45	-	90	76	60
0954	5.5	-	-	19	84.3	60	62	172	211	221	231	213	-3.9	6.1	13	30	45	-	90	76	60
1055	5.2	-	-	18	85.2	60	59	173	211	221	231	212	-4.1	6.4	12	30	45	-	90	77	60
1242	5.6	-	-	18	86.5	60	61	181	210	225	236	212	-3.9	6.6	13	30	45	-	90	77	60
1414	5.8	-	-	18	88.4	60	59	177	211	228	240	212	-3.8	6.9	13	30	45	-	90	77	60
1518	5.9	-	-	18	88	60	60	173	211	228	243	212	-4.3	6.9	13	30	45	-	90	77	60
1606	6.1	-	-	17	88	60	56	172	211	228	242	212	-3.8	7.3	13	30	45	-	90	77	60
1711	6.2	-	-	18	90	60	57	179	211	229	243	212	-3.9	7.4	13	30	45	-	90	77	60
1808	6.6	-	-	18	96	60	60	185	211	231	244	212	-3.7	7.4	13	30	45	-	90	77	60
1912	6.9	19	121	-	-	60	58	207	210	234	245	212	-3.9	7.4	13	30	45	-	90	77	60
2014	7.0	19	130	-	-	60	55	197	211	250	255	211	-4.1	7.4	13	30	45	-	90	77	60
2109	7.0	-	-	19	100	60	60	192	211	258	263	211	-3.8	7.4	13	30	45	-	90	77	60
2208	7.1	-	-	19	95	60	63	189	211	262	264	212	-4.0	7.4	13	30	45	-	90	77	60
2312	7.0	-	-	19	83	60	74	186	210	249	264	211	-4.2	7.4	13	30	45	-	90	78	60

KOMLINE-SANDERSON ENGINEERING CORPORATION

D0571 - Operator Data Sheets - Page 1 - Rev D

F:\Operations Shared\Process & Instrument Equipment Manuals\Dryer Building\Komline Dryer\Komline Dryer Operator Log Sheet

Harrisonburg-Rockingham Regional Sewer Authority
K-S Biosolids drying System 00571

Date: 11-10-19 Operators: M-N / N-M BSS TBS

Operators Log Sheet

Time	DRYER FEED HOPPER H-1					DRYER - DRY-01									Discharge and Cooling Conveyors						
	Silo level	Feed Pump PCP-1		Feed Pump PCP-2		Motor		Dry Bed Temperatures				Dryer Exhaust		Weir Level	RV-1	CV-1	CV-2	CV-3	Water	Product	RV-2
	LT-2111	Speed 0-100%	Pressure PIT-2106	Speed 0-100%	Pressure PIT-2105	Speed &	Amps	Bed 1 TE-3002	Bed 2 TE-3005	Bed 3 TE-3008	Bed 4 TE-3007	TT-5000	PIT-3003		Speed 0-100%	Speed 0-100%	Speed 0-100%	Speed 0-100%	Flow FI-4001	Temp TT-4009	Speed 0-100%
	Feet	Hz	PSIG	Hz	PSIG	Hz	Amps	°F	°F	°F	°F	°F	in. WC	in.	Hz	Hz	Hz	%	GPM	°F	Hz
0033	7.1	–	–	19	86.2	60	64	176	211	231	249	213	-3.2	7.4	12	30	45	–	90	78	60
0109	7.2	–	–	19	86.4	60	58	180	211	228	245	212	-4.2	7.4	12	30	45	–	90	79	60
0214	7.1	–	–	19	89.2	60	60	177	211	226	237	212	-5.6	7.7	13	30	45	–	90	79	60
0306	7.2	–	–	19	90.2	60	60	175	211	222	236	212	-3.6	8.1	12	30	45	–	90	80	60
0358	7.2	–	–	19	90.4	60	58	176	211	226	237	212	-3.7	8.4	13	30	45	–	90	79	60
0504	7.0	–	–	19	92.3	60	64	177	211	229	241	212	-3.5	8.5	13	30	45	–	90	78	60
0608	7.1	–	–	19	93.9	60	58	175	211	231	244	212	-3.6	8.6	12	30	45	–	90	78	60
0705	7.2	–	–	19	94.0	60	68	177	211	233	245	212	-5.5	8.6	12	30	45	–	90	78	60
0812	7.2	–	–	19	94.4	60	60	175	211	230	246	212	-3.8	8.6	12	30	45	–	90	78	60
0902	7.2	–	–	19	90.2	60	60	172	211	228	245	212	-4.0	8.6	13	30	45	–	90	78	60
1008	7.1	–	–	19	85.5	60	60	182	211	225	243	212	-2.6	8.6	12	30	45	–	90	78	60
1106	7.2	–	–	19	79.6	60	60	175	211	223	240	212	-3.6	8.8	12	30	45	–	90	78	60
1305	6.4	–	–	19	81.1	60	60	175	211	225	243	212	-3.8	9.1	12	30	45	–	90	77	60
1458	5.7	–	–	19	82.7	60	64	178	211	221	242	212	-3.3	9.1	12	30	45	–	90	77	60
1500	5.1	–	–	18	82.4	60	64	177	211	218	242	212	-3.3	9.4	13	30	45	–	90	77	60
1604	4.6	–	–	18	86.0	60	63	182	210	217	242	211	-3.5	9.7	13	30	45	–	90	77	60
1702	4.1	–	–	17	85.0	60	67	180	210	217	244	211	-3.3	9.7	13	30	45	–	90	76	60
1801	4.3	–	–	17	85.6	60	60	178	211	219	245	211	-3.5	9.7	13	30	45	–	90	76	60
1909	4.3	46	93	+	–	60	60	267	211	221	249	212	-3.6	9.7	13	30	45	–	90	77	60
2006	4.6	–	–	16	96.2	60	62	265	211	245	255	210	-3.5	9.1	13	30	45	–	90	77	60
2106	4.9	46	93	–	–	60	61	267	211	256	260	211	-3.8	8.4	13	30	45	–	90	77	60
2211	5.0	–	–	16	90.1	60	58	192	211	264	266	210	-3.8	7.6	12	30	45	–	90	79	60
2303	5.0	–	–	16	60.9	60	59	195	211	263	269	210	-3.5	6.8	13	30	45	–	90	80	60

KOMline-Sanderson Engineering Corporation

D0571 - Operator Data Sheets - Page 1 - Rev D

F:\Operations Share\Process & Instrument Equipment Manuals\Dryer Building\Komline Dryer\Komline Dryer Operator Log Sheets

Harrisonburg-Rockingham Regional Sewer Authority
K•S Biosolids drying System 00671

Date: 11-1-19 Operators: 12-8 / MS / 8-4 / JC / 4-12 / [illegible]

Operators Log Sheet

Time	DRYER FEED HOPPER H-1					DRYER - DRY-01									Discharge and Cooling Conveyors						
	Silo level	Feed Pump PCP-1		Feed Pump PCP-2		Motor		Dry Bed Temperatures				Dryer Exhaust		Wsir Level	RV-1	CV-1	CV-2	CV-3	Water	Product	RV-2
	LT-2111	Speed 0-100%	Pressure PIT-2105	Speed 0-100%	Pressure PIT-2105	Speed &	Amps	Bed 1 TE-3002	Bed 2 TE-3005	Bed 3 TE-3006	Bed 4 TE-3007	TT-5000	PIT-3003		Speed 0-100%	Speed 0-100%	Speed 0-100%	Speed 0-100%	Flow FI-4001	Temp TT-4009	Speed 0-100%
	Feet	Hz	PSIG	Hz	PSIG	Hz	Amps	°F	°F	°F	°F	°F	in. WC	in.	Hz	Hz	Hz	%	GPM	°F	Hz
0115	4.9	–	–	16	62	60	60	194	211	257	264	209	-3.7	6.0	13	30	45	–	90	82	60
0200	5.3	–	–	16	63	60	54	192	211	252	262	209	-3.6	5.7	13	30	45	–	90	82	60
0316	5.4	–	–	16	66	59	62	194	211	250	258	209	-3.7	5.5	13	30	45	–	90	81	60
0448	5.6	–	–	16	70	60	60	195	211	246	256	209	-3.5	4.9	13	30	45	–	90	80	60
0540	5.7	–	–	16	72	60	61	195	211	244	256	209	-3.5	4.3	13	30	45	–	90	79	60
0642	5.7	–	–	16	76	60	54	194	211	239	256	209	-3.8	3.5	13	30	45	–	90	79	60
0730	6.0	–	–	16	78	59	57	195	211	239	256	210	-3.6	3.3	13	30	45	–	90	79	60
1055	6.6	–	–	16	87	60	60	194	211	237	250	209	-3.8	2.1	13	30	45	–	90	79	60
1406	7.2	–	–	17	83	60	57	194	210	239	251	209	-3.2	1.7	13	30	45	–	90	77	60
1503	7.4	–	–	17	81	60	58	198	210	237	250	211	-3.5	1.2	13	30	45	–	90	77	60
1632	7.4	–	–	17	80	60	61	193	210	232	245	214	-3.6	1.2	13	30	45	–	90	78	60
1810	7.6	–	–	18	91	59	59	192	210	236	239	214	-3.2	1.4	13	30	45	–	90	78	60
1900	7.8	–	–	19	96	60	57	196	210	236	246	213	-3.1	6.1	13	30	45	–	90	77	60
2001	7.9	–	–	19	100	60	58	192	210	251	258	213	-3.2	5.6	13	30	45	–	90	76	60
2101	8.4	20	65	–	–	60	52	207	210	249	259	213	-3.5	4.8	13	30	45	–	90	76	60
2201	8.4	20	134	–	–	60	62	189	210	260	263	212	-3.2	4.2	13	30	45	–	90	77	60
2300	8.5	–	–	20	107	60	54	192	210	258	264	212	-3.4	3.4	13	30	45	–	90	77	60

Harrisonburg-Rockingham Regional Sewer Authority
K-S Biosolids drying System 00571

Date: 11-12-19 Operators: 12-8 MS / 8-4 JC / 4-12 TM

Operators Log Sheet

Time	DRYER FEED HOPPER H-4					DRYER - DRY-01									Discharge and Cooling Conveyors						
	Silo level	Feed Pump PCP-1		Feed Pump PCP-2		Motor		Dry Bed Temperatures				Dryer Exhaust		Weir Level	RV-1	CV-1	CV-2	CV-3	Water	Product	RV-2
	LT-2111	Speed 0-100%	Pressure PIT-2106	Speed 0-100%	Pressure PIT-2106	Speed &	Amps	Bed 1 TE-3002	Bed 2 TE-3005	Bed 3 TE-3006	Bed 4 TE-3007	TT-5000	PIT-3003		Speed 0-100%	Speed 0-100%	Speed 0-100%	Speed 0-100%	Flow FI-4001	Temp TT-4009	Speed 0-100%
	Feet	Hz	PSIG	Hz	PSIG	Hz	Amps	°F	°F	°F	°F	°F	in. WC	in.	Hz	Hz	Hz	%	GPM	°F	Hz
0130	8.7	20	128	–	–	60	54	204	212	264	259	212	-3.3	2.6	13	30	45	–	90	77	60
0250	9.3	–	–	20	107	60	55	207	212	266	263	213	-3.5	1.8	13	30	45	–	90	77	60
0351	9.1	–	–	22	110	60	51	196	211	271	269	213	-3.4	1.1	13	30	45	–	90	76	60
0430	9.0	–	–	22	109	60	53	186	210	269	270	213	-3.5	0.9	13	30	45	–	90	77	60
0545	9.0	–	–	22	109	60	55	181	210	245	261	214	-3.4	0.7	13	30	45	–	90	78	60
0610	9.0	–	–	22	106	60	61	180	210	237	256	213	-3.2	10.0	13	30	45	–	90	79	60
0733	9.0	–	–	22	102	60	55	167	210	240	255	213	-1.6	9.3	13	30	45	–	90	78	60
1121	8.1	–	–	22	110	60	56	180	210	259	272	213	-2.4	8.3	13	30	45	–	90	76	60
1320	8.1	–	–	22	114	60	58	180	211	235	262	212	-2.4	9.4	13	30	45	–	90	77	60
1506	7.6	–	–	22	113	60	62	185	211	232	262	212	-2.2	9.0	13	30	45	–	90	76	60
1700	7.6	–	–	22	108	60	60	179	210	227	257	211	-2.6	9.0	12	30	45	–	90	76	60
1809	7.3	–	–	22	105	60	62	179	211	226	257	211	-2.3	9.0	12	30	45	–	90	76	60
1856	7.3	–	–	22	104	60	57	178	211	227	256	211	-2.5	9.0	13	30	45	–	90	75	60
2000	7.1	–	–	22	107	60	64	179	211	229	256	211	-2.5	9.0	12	30	45	–	90	75	60
2111	6.8	–	–	22	108	60	57	187	211	223	254	211	-2.5	9.0	13	30	45	–	90	74	60
2210	6.8	–	–	22	109	60	61	183	211	221	253	210	-2.5	9.5	13	30	45	–	90	74	60
2363	6.7	–	–	22	104	60	60	177	211	221	257	211	-2.5	9.4	13	30	45	–	90	75	60

KOMLINE-SANDERSON ENGINEERING CORPORATION

00571 - Operator Data Sheets - Page 1 - Rev D

F:\Operations Shared\Process & Instrument Equipment Manuals\Dryer Building\Komline Dryer\Komline Dryer Operator Log Sheets

Harrisonburg-Rockingham Regional Sewer Authority
K-S Biosolids drying System 00571

Date: 7-13-19 Operators: 12-8 MS / 8-4 / 4-12 TJS

Operators Log Sheet

Time	DRYER FEED HOPPER H-1					DRYER - DRY-01									Discharge and Cooling Conveyors						
	Silo level	Feed Pump PCP-1		Feed Pump PCP-2		Motor		Dry Bed Temperatures				Dryer Exhaust		Weir Level	RV-1	CV-1	CV-2	CV-3	Water	Product	RV-2
	LT-2111	Speed 0-100%	Pressure PIT-2106	Speed 0-100%	Pressure PIT-2106	Speed Δ	Amps	Bed 1 TE-3002	Bed 2 TE-3005	Bed 3 TE-3006	Bed 4 TE-3007	TT-3000	PIT-3003		Speed 0-100%	Speed 0-100%	Speed 0-100%	Speed 0-100%	Flow FI-4001	Temp TT-4009	Speed 0-100%
	Feet	Hz	PSIG	Hz	PSIG	Hz	Amps	°F	°F	°F	°F	°F	in. WC	in.	Hz	Hz	Hz	%	GPM	°F	Hz
0120	5.9	–	–	22	91	60	61	165	211	219	259	216	-2.5	9.4	13	30	45	–	90	74	60
0320	5.0	–	–	21	95	60	60	156	211	218	256	210	-2.4	9.4	13	30	45	–	90	75	60
0451	4.8	–	–	21	96	60	61	169	211	216	250	210	-2.7	9.7	13	30	45	–	90	75	60
0550	4.6	–	–	21	97	60	62	157	211	217	250	210	-2.6	9.8	13	30	45	–	90	75	60
0641	4.6	–	–	21	93	60	65	156	211	217	250	210	-2.3	9.8	13	30	45	–	90	75	60
0734	4.0	–	–	20	81	60	65	169	211	216	250	210	-2.4	9.8	13	30	45	–	90	75	60
0906	3.2	–	–	20	69	60	60	173	211	216	246	210	-2.6	9.8	13	30	45	–	90	74	60
1052	3.7	–	–	20	79	60	60	171	211	215	241	210	-2.6	9.9	13	30	45	–	90	75	60
1235	4.3	–	–	20	80	60	65	171	211	216	241	210	-2.5	10.3	13	30	45	–	90	75	60
1440	4.6	–	–	20	75	60	61	178	211	216	244	210	-2.5	10.3	13	30	45	–	90	76	60
1540	4.7	–	–	20	73	60	62	176	211	216	244	210	-2.5	10.3	13	30	45	–	90	76	60
1706	5.2	–	–	20	70	60	62	175	211	216	242	210	-2.4	10.3	13	30	45	–	90	77	60
1851	5.4	–	–	20	70	60	61	181	211	216	239	210	-2.9	10.6	13	30	45	–	90	77	60
1959	5.6	–	–	20	70	59	60	180	211	217	239	210	-2.5	10.8	13	30	45	–	90	77	60
2103	5.8	–	–	20	69	60	64	179	211	217	238	210	-2.4	10.8	13	30	45	–	90	77	60
2114	6.1	–	–	20	70	60	61	183	211	218	241	210	-2.7	11.4	13	30	45	–	90	77	60
2203	6.0	–	–	20	68	60	63	179	211	219	242	210	-2.6	11.4	13	30	45	–	90	77	60
2306	6.3	–	–	20	69	60	61	181	211	218	241	210	-2.3	11.6	13	30	45	–	90	77	60

Harrisonburg-Rockingham Regional Sewer Authority
K-S Biosolids drying System 00571

Date: 1-14-19 Operators: 12-8 / 8-4 / 4-12 MS / Eemyte

Operators Log Sheet

Time	DRYER FEED HOPPER K-1					DRYER - DRY-01									Discharge and Cooling Conveyors						
	Silo level	Feed Pump PCP-1		Feed Pump PCP-2		Motor		Dry Bed Temperatures				Dryer Exhaust		Weir Level	RV-1	CV-1	CV-2	CV-3	Water	Product	RV-2
	LT-2111	Speed 0-100%	Pressure PIT-2106	Speed 0-100%	Pressure PIT-2105	Speed &	Amps	Bed 1 TE-3002	Bed 2 TE-3005	Bed 3 TE-3006	Bed 4 TE-3007	TT-5000	PIT-3003		Speed 0-100%	Speed 0-100%	Speed 0-100%	Speed 0-100%	Flow FI-4001	Temp TT-4009	Speed 0-100%
	Feet	Hz	PSIG	Hz	PSIG	Hz	Amps	°F	°F	°F	°F	°F	In. WC	In.	Hz	Hz	Hz	%	GPM	°F	Hz
0124	6.3	-	-	20	70	60	69	180	211	217	233	210	-2.3	12.8	13	30	45	-	90	77	60
0224	6.5	-	-	20	70	60	63	180	211	220	232	210	-2.5	13.9	13	30	45	-	90	77	60
0318	6.5	-	-	20	71	60	63	181	211	220	232	210	-2.5	14.3	13	30	45	-	90	76	60
0348	6.6	-	-	20	71	60	65	183	211	221	232	210	-2.3	15.3	13	30	45	-	90	75	60
0511	6.7	-	-	20	71	60	62	180	211	225	233	210	-2.5	15.2	13	30	45	-	90	75	60
0612	7.0	-	-	20	72	60	63	179	211	226	234	210	-2.8	13.6	13	30	45	-	90	74	60
0713	7.2	-	-	20	71	60	72	180	211	226	234	210	-2.7	12.8	13	30	45	-	90	73	60
827	7.4	-	-	20	71	60	73	182	212	227	234	210	-1.3	12.6	12	30	45	-	90	73	60
949	7.7	-	-	21	73	59	69	187	212	230	238	210	-1.3	12.6	13	30	45	-	90	73	60
1108	7.6	-	-	21	72	60	69	186	213	235	243	210	-0.3	12.7	12	30	45	-	90	74	60
1241	7.5	-	-	21	72	60	66	184	214	241	254	210	-3.7	12.5	13	30	45	-	90	74	60
1352	7.7	-	-	21	73	60	66	173	214	248	264	210	-4.0	10.9	13	30	45	-	90	75	60
1533	7.6	-	-	21	73	60	72	183	212	220	225	210	-6.4	11.4	13	30	45	-	90	84	60
1716	7.5	-	-	20	71	60	67	185	212	216	219	210	-4.1	12.9	13	30	45	-	90	88	60
1857	7.8	-	-	21	71	60	69	186	212	217	219	210	-4.7	13.0	13	30	45	-	90	89	60
1900	7.6	-	-	21	71	60	65	188	212	221	224	210	-5.3	13.0	13	30	45	-	90	87	60
2000	7.7	-	-	21	71	60	61	185	212	229	234	210	-4.7	13.0	13	30	45	-	90	84	60
2047	7.6	-	-	21	71	60	57	188	212	239	244	210	-5.0	13.0	13	30	45	-	90	81	60
2200	7.7	-	-	21	70	60	62	178	212	251	256	210	-3.3	12.5	13	30	45	-	90	79	60
2311	7.7	-	-	21	70	60	69	186	212	254	268	210	0.48	12.5	13	30	45	-	90	79	60

KOMLINE-SANDERSON ENGINEERING CORPORATION

D05P1 - Operator Data Sheets - Page 1 - Rev D

P:\Operations Data\Process & Instrument Equipment Manual\Dryer Building\Komline Dryer\Komline Dryer Operator Log Sheets.xlsx

Harrisonburg-Rockingham Regional Sewer Authority
K-S Biosolids drying System 00571

Date: 11-15-19

Operators: 12-8 MS / 8-4 BM/JC / 4-12 TJS

Operators Log Sheet

Time	DRYER FEED HOPPER H-1					DRYER - DRY-01									Discharge and Cooling Conveyors						
	Silo level	Feed Pump PCP-1		Feed Pump PCP-2		Motor		Dry Bed Temperatures				Dryer Exhaust		Weir Level	RV-1	CV-1	CV-2	CV-3	Water	Product	RV-2
	LT-2111	Speed 0-100%	Pressure PIT-2108	Speed 0-100%	Pressure PIT-2105	Speed &	Amps	Bed 1 TE-3002	Bed 2 TE-3006	Bed 3 TE-3006	Bed 4 TE-3007	TT-5000	PIT-3003		Speed 0-100%	Speed 0-100%	Speed 0-100%	Speed 0-100%	Flow FI-4031	Temp TT-4009	Speed 0-100%
	Feet	Hz	PSIG	Hz	PSIG	Hz	Amps	°F	°F	°F	°F	°F	in. WC	in.	Hz	Hz	Hz	%	GPM	°F	Hz
0415	7.4	25	-	21	70	60	67	181	211	238	277	210	-1.5	11.5	13	30	45	-	90	83	60
0523	7.7	-	-	21	70	60	65	177	211	233	275	210	-2.5	11.5	13	30	45	-	90	83	60
0453	7.5	-	-	21	70	60	60	181	211	233	276	210	-3.2	11.3	13	30	45	-	90	81	60
0541	7.6	-	-	21	70	60	66	182	211	228	274	210	-3.7	11.0	13	30	45	-	90	81	60
0630	7.6	-	-	21	71	60	59	184	211	225	268	210	-3.5	10.8	13	30	45	-	90	82	60
0727	7.6	-	-	21	71	60	67	181	211	221	262	210	-3.8	10.8	13	30	45	-	90	82	60
909	7.7	-	-	21	76	60	58	180	211	221	259	210	-3.5	10.6	12	30	45	-	90	81	60
1032	7.5	-	-	21	71	60	62	179	211	220	259	210	-1.2	10.4	13	30	45	-	90	81	60
1128	7.3	-	-	21	71	60	59	174	211	218	257	210	-1.1	10.1	13	30	45	-	90	81	60
1249	7.2	-	-	21	70	59	65	177	211	216	250	210	-1.2	10.1	13	30	45	-	90	81	60
1415	7.3	-	-	21	71	60	60	170	211	216	250	210	-1.1	10.1	13	30	45	-	90	81	60
1536	7.3	-	-	21	74	60	65	179	211	217	252	210	-1.4	9.7	12	30	45	-	90	81	60
1702	7.1	-	-	21	73	60	57	183	211	217	255	210	-1.1	9.7	12	30	45	-	90	81	60
1800	7.1	-	-	21	73	60	58	185	211	217	257	210	-1.1	9.3	13	30	45	-	90	80	60
1901	6.2	-	-	21	74	60	58	188	211	215	258	210	-1.7	8.3	13	30	45	-	90	81	60
2005	6.0	-	-	21	74	60	61	177	211	216	246	209	-2.0	9.1	13	30	45	-	90	82	60
2100	6.2	-	-	21	74	60	56	188	211	222	256	209	-2.0	9.1	13	30	45	-	90	82	60
2200	6.2	-	-	21	73	60	58	176	211	225	256	210	-2.2	8.9	13	30	45	-	90	81	60
2258	6.2	-	-	21	74	60	55	178	211	228	255	210	-2.0	8.3	13	30	45	-	90	81	60

KOMLINE-SANDERSON ENGINEERING CORPORATION

D0571 - Operator Data Sheets - Page 1 - Rev D

P:\Operations\Process & Instrument Equipment Manuals\Dryer Building\Komline Dryer\Komline Dryer Operator Log Sheets.xlsx

Harrisonburg-Rockingham Regional Sewer Authority
K-S Biosolids drying System 00571

Date: 11-16-19 Operators: M-N / N-M EBM

Operators Log Sheet

Time	DRYER FEED HOPPER H-1					DRYER - DRY-01									Discharge and Cooling Conveyors						
	Silo level	Feed Pump PCP-1		Feed Pump PCP-2		Motor		Dry Bed Temperatures				Dryer Exhaust		Weir Level	RV-1	CV-1	CV-2	CV-3	Water	Product	RV-2
	LT-2111	Speed 0-100%	Pressure PIT-2108	Speed 0-100%	Pressure PIT-2105	Speed &	Amps	Bed 1 TE-3002	Bed 2 TE-3005	Bed 3 TE-3006	Bed 4 TE-3007	TT-5000	PIT-3003		Speed 0-100%	Speed 0-100%	Speed 0-100%	Speed 0-100%	Flow FI-4011	Temp TT-4000	Speed 0-100%
	Feet	Hz	PSIG	Hz	PSIG	Hz	Amps	°F	°F	°F	°F	°F	in. WC	in.	Hz	Hz	Hz	%	GPM	°F	Hz
00:45	6.2	–	–	21	74	59	59	173	211	225	250	210	-2.2	8.3	13	30	45	–	90	83	60
01:25	6.2	–	–	21	74	60	54	177	211	227	249	210	-2.0	8.3	13	30	45	–	90	83	60
02:36	6.2	–	–	21	75	60	58	178	211	231	251	210	-2.7	8.3	13	30	45	–	90	83	60
03:22	6.3	–	–	21	75	60	58	176	211	233	253	210	-2.3	8.3	13	30	45	–	90	82	60
04:42	6.1	–	–	21	75	60	59	167	211	233	255	210	-2.7	8.3	13	30	45	–	90	81	60
05:27	6.3	–	–	21	74	60	58	178	211	228	255	210	-2.1	8.1	13	30	45	–	90	81	60
06:40	6.3	–	–	21	73	60	54	164	211	222	249	210	-1.9	7.9	13	30	45	–	90	81	60
07:30	6.2	–	–	21	74	60	52	173	211	221	245	210	-1.8	8.0	13	30	45	–	90	81	60
09:18	6.2	–	–	21	73	60	56	156	211	227	250	210	-1.8	8.1	13	30	45	–	90	80	60
11:10	6.1	–	–	21	71	60	57	169	211	229	254	210	-1.7	8.1	13	30	45	–	90	78	60
1122	6.1	–	–	21	74	60	53	163	211	228	253	210	-1.8	8.1	13	30	45	–	90	79	60
1320	6.1	–	–	21	74	60	54	178	211	227	252	210	-1.7	8.1	13	30	45	–	90	79	60
1428	6.3	–	–	21	74	60	53	174	211	224	252	210	-1.6	8.1	13	30	45	–	90	80	60
1538	6.3	–	–	21	73	60	57	161	211	227	253	210	-1.8	8.1	13	30	45	–	90	80	60
1642	6.1	–	–	21	72	60	54	168	211	229	254	210	-1.8	8.1	13	30	45	–	90	80	60
1718	6.0	–	–	21	72	60	57	173	211	227	254	210	-2.0	8.1	13	30	45	–	90	80	60
1811	6.2	–	–	21	73	60	52	176	211	228	254	210	-2.4	8.1	13	30	45	–	90	80	60
1915	5.9	–	–	21	71	60	52	167	211	227	253	210	-3.0	8.1	12	30	45	–	90	80	60
2011	6.2	–	–	21	70	60	58	173	211	230	255	210	-2.5	8.1	12	30	45	–	90	80	60
2110	6.4	–	–	21	70	60	53	167	211	228	254	210	-1.9	8.1	13	30	45	–	90	80	60
2205	6.3	–	–	21	70	60	56	163	211	226	253	210	-2.0	8.1	12	30	45	–	90	79	60
2309	6.2	–	–	21	71	60	52	172	211	226	252	210	-2.5	8.1	12	30	45	–	90	79	60

D

Harrisonburg-Rockingham Regional Sewer Authority
K•S Biosolids drying System 00571

Date: 11-17-19 Operators: M-N / N-m Elem

Operators Log Sheet

Time	DRYER FEED HOPPER N-1					DRYER - DRY-01									Discharge and Cooling Conveyors						
	Silo level	Feed Pump PCP-1		Feed Pump PCP-2		Motor		Dry Bed Temperatures				Dryer Exhaust		Weir Level	RV-1	CV-1	CV-2	CV-3	Water	Product	RV-2
	LT-2111	Speed 0-100%	Pressure PIT-2106	Speed 0-100%	Pressure PIT-2105	Speed &	Amps	Bed 1 TE-3002	Bed 2 TE-3005	Bed 3 TE-3006	Bed 4 TE-3007	TT-5000	PIT-3003		Speed 0-100%	Speed 0-100%	Speed 0-100%	Speed 0-100%	Flow FI-4001	Temp TT-4009	Speed 0-100%
	Feet	Hz	PSIG	Hz	PSIG	Hz	Amps	°F	°F	°F	°F	°F	in. WC	in.	Hz	Hz	Hz	%	GPM	°F	Hz
0041	6.2	–	–	21	69	60	55	176	211	225	252	210	-2.3	8.1	13	30	45	–	90	79	60
0121	6.2	–	–	21	69	60	57	169	211	224	252	210	-2.4	8.1	13	30	45	–	90	79	60
0235	6.2	–	–	21	70	60	54	167	211	225	251	210	-2.6	8.1	13	30	45	–	90	79	60
0330	6.2	–	–	21	71	60	56	173	211	226	251	210	-2.4	8.1	13	30	45	–	90	79	60
0435	6.2	–	–	21	72	60	54	164	211	228	252	210	-2.4	8.1	13	30	45	–	90	78	60
0527	6.0	–	–	21	71	60	52	169	211	225	253	210	-2.1	8.1	13	30	45	–	90	78	60
0619	6.2	–	–	21	70	60	53	155	211	229	255	210	-1.9	8.1	13	30	45	–	90	78	60
0727	6.2	–	–	21	71	60	53	169	211	229	255	210	-1.9	8.1	13	30	45	–	90	79	60
850	6.0	–	–	21	71	60	54	178	211	230	255	210	-2.0	8.1	13	30	45	–	90	79	60
0921	6.1	–	–	21	71	60	53	165	211	226	255	210	-1.7	8.1	13	30	45	–	90	79	60
1041	6.2	–	–	21	72	60	54	175	211	226	254	210	-1.9	8.1	13	30	45	–	90	79	60
1125	6.2	–	–	21	70	60	52	163	211	227	254	210	-1.9	8.1	13	30	45	–	90	79	60
1249	6.0	–	–	21	71	60	52	166	211	228	254	210	-2.0	8.1	13	30	45	–	90	80	60
1346	6.0	–	–	21	71	60	54	166	211	228	254	210	-2.2	8.1	13	30	45	–	90	80	60
1444	5.9	–	–	21	71	60	58	168	210	226	254	210	-2.4	8.1	13	30	45	–	90	80	60
1510	6.1	–	–	21	70	60	58	173	211	228	256	210	-1.9	8.5	13	30	45	–	90	80	60
1624	6.0	–	–	21	70	60	53	170	211	251	268	210	-2.0	10.4	13	30	45	–	90	80	60
1711	6.0	–	–	21	70	60	56	169	211	263	278	210	-1.9	8.7	12	30	45	–	90	79	60
1815	6.1	–	–	21	70	60	53	175	211	263	282	210	-2.3	7.6	12	30	45	–	90	79	60
1905	5.8	–	–	21	71	60	55	169	211	233	267	210	-2.2	7.8	13	30	45	–	90	81	60
2010	6.1	–	–	21	71	60	53	171	210	225	255	210	-2.2	8.0	13	30	45	–	90	82	60
2102	6.0	–	–	21	70	59	58	175	211	223	250	210	-2.8	8.0	13	30	45	–	90	82	60
2206	5.9	–	–	21	71	60	57	171	211	226	251	210	-2.1	8.1	12	30	45	–	90	81	60
2306	6.0	–	–	21	70	60	52	171	210	228	256	210	-2.0	8.1	13	30	45	–	90	81	60

P:\Operations Shared\Process & Instrument Equipment Manuals\Dryer Building\Komline Dryer\Excel's or Dryer Operator Log Sheets.xlsx

Harrisonburg-Rockingham Regional Sewer Authority
K-S Biosolids drying System 00571

Date: 11-18-19 Operators: 12-8 BM | 8-4 | 4-12 EPM

Operators Log Sheet

Time	DRYER FEED HOPPER H-1					DRYER - DRY-01									Discharge and Cooling Conveyors						
	Silo level	Feed Pump PCP-1		Feed Pump PCP-2		Motor		Dry Bed Temperatures				Dryer Exhaust		Weir Level	RV-1	CV-1	CV-2	CV-3	Water	Product	RV-2
	LT-2111	Speed 0-100%	Pressure PIT-2108	Speed 0-100%	Pressure PIT-2105	Speed &	Amps	Bed 1 TE-3002	Bed 2 TE-3005	Bed 3 TE-3006	Bed 4 TE-3007	TT-5000	PIT-3003		Speed 0-100%	Speed 0-100%	Speed 0-100%	Speed 0-100%	Flow FI-4001	Temp TT-4009	Speed 0-100%
	Feet	Hz	PSIG	Hz	PSIG	Hz	Amps	°F	°F	°F	°F	°F	in. WC	in.	Hz	Hz	Hz	%	GPM	°F	Hz
0035	6.1	–	–	21	70	60	52	172	210	227	253	210	-2.0	7.9	13	30	45	–	90	81	60
0130	6.0	–	–	21	69	60	56	168	210	226	252	210	-1.9	7.9	12	30	45	–	90	81	60
0230	6.1	–	–	21	68	60	52	178	210	228	251	210	-2.3	7.9	13	30	45	–	90	81	60
0335	6.2	–	–	21	68	60	52	175	210	226	252	210	-2.4	7.9	13	30	45	–	90	81	60
0440	6.1	–	–	21	67	60	55	171	210	226	251	210	-1.9	7.9	13	30	45	–	90	81	60
0530	6.0	–	–	21	67	60	52	171	210	224	250	210	-1.9	7.9	13	30	45	–	90	81	60
0637	6.0	–	–	21	69	60	52	174	210	223	250	210	-2.1	7.9	13	30	45	–	90	81	60
0716	6.0	–	–	21	69	60	54	170	210	226	251	210	-2.4	7.9	13	30	45	–	90	80	60
1037	6.1	–	–	21	70	60	55	174	210	229	254	210	-2.2	7.9	13	30	45	–	90	80	60
1308	6.1	–	–	21	70	60	56	179	210	225	250	210	-2.5	7.6	13	30	45	–	90	80	60
1435	6.1	–	–	21	70	60	56	175	210	227	251	210	-2.1	7.6	13	30	45	–	90	80	60
1534	6.1	–	–	21	69	60	54	170	210	229	252	210	-2.1	7.6	13	30	45	–	90	80	60
1633	6.1	–	–	21	69	60	52	170	210	229	253	210	-2.0	7.6	13	30	45	–	90	80	60
1725	6.0	–	–	21	71	60	51	171	210	225	254	210	-2.5	7.6	12	30	45	–	90	80	60
1818	5.9	–	–	21	72	60	57	168	210	228	253	210	-2.4	7.6	12	30	45	–	90	80	60
1905	5.9	–	–	21	72	57	58	170	210	231	255	210	-2.4	7.6	13	30	45	–	90	80	60
2014	6.1	–	–	21	72	60	56	176	210	228	254	210	-1.9	7.4	12	30	45	–	90	80	60
2111	5.9	–	–	21	69	60	57	168	210	227	252	210	-2.2	7.4	13	30	45	–	90	80	60
2208	6.1	–	–	21	68	60	54	177	210	226	251	210	-2.1	7.4	12	30	45	–	90	80	60
2304	5.9	–	–	21	68	60	57	170	210	226	250	210	-2.0	7.4	13	30	45	–	90	80	60

Henniker-Contoocook-Rockingham Regional Sewer Authority
K-S Biosolids drying System 005571

Date: 11-19-19 Operators: 12-8 BM | 8-4 TM | 4-12 EM

Operators Log Sheet

Time	DRYER FEED HOPPER H-1					DRYER - DRY-01									Discharge and Cooling Conveyors						
	SEKS	Feed Pump PCP-1		Feed Pump PCP-2		Motor		Dry Bed Temperatures				Dryer Exhaust		Water Level	RV-1	CV-1	CV-2	CV-3	Water	Product	RV-2
	LT-2111	Speed 0-100%	Pressure PIT-2106	Speed 0-100%	Pressure PIT-2105	Speed &	Amps	Bed 1 TE-3002	Bed 2 TE-3005	Bed 3 TE-3006	Bed 4 TE-3007	TT-5000	PIT-3003		Speed 0-100%	Speed 0-100%	Speed 0-100%	Speed 0-100%	Flow FI-4001	Temp TT-4009	Speed 5-100%
	Feet	Hz	PSIG	Hz	PSIG	Hz	Amps	°F	°F	°F	°F	°F	In. WC	In.	Hz	Hz	Hz	%	GPM	°F	Hz
1237	5.9	–	–	20	67	60	57	175	210	226	252	210	-1.6	7.4	13	30	45	–	90	80	60
0122	5.9	–	–	20	66	60	52	178	210	224	250	210	-1.7	7.4	13	30	45	–	90	80	60
0307	5.8	–	–	21	62.	60	55	171	210	227	250	210	-1.7	7.4	13	30	45	–	90	80	60
0537	6.0	–	–	21	65	60	51	176	210	225	249	210	-1.9	7.4	13	30	45	–	90	80	60
0845	6.0	–	–	21	67	60	52	175	210	225	249	210	-2.2	7.4	13	30	45	–	90	80	60
1025	6.0	–	–	21	68	60	52	175	210	224	249	210	-1.8	7.4	13	30	45	–	90	80	60
1332	5.8	–	–	21	67	60	52	176	210	225	249	210	-2.1	7.4	13	30	45	–	90	80	60
1615	6.0	–	–	21	65	60	52	175	210	227	249	210	-1.7	7.4	13	30	45	–	90	80	60
1850	5.8	–	–	21	67	60	51	174	210	226	251	210	-1.6	7.4	13	30	45	–	90	80	60
1947	5.8	–	–	21	67	60	52	174	210	225	247	210	-2.9	7.4	13	30	45	–	90	80	60
1136	6.0	–	–	21	71	60	56	171	210	223	247	210	-6.1	7.4	12	30	45	–	90	79	60
1735	5.9	–	–	21	72	60	53	168	210	224	247	210	-5.9	7.4	13	30	45	–	90	80	60
1817	6.0	–	–	21	72	60	52	172	210	224	248	210	-5.2	7.4	13	30	45	–	90	80	60
1905	6.2	–	–	21	73	60	51	174	210	226	250	210	-5.1	7.4	13	30	45	–	90	79	60
2015	6.1	–	–	21	72	60	55	176	210	226	251	210	-8.3	7.4	13	30	45	–	90	80	60
2107	4.1	–	–	21	71	60	53	172	210	227	253	210	-8.4	7.4	13	30	45	–	90	80	60
2203	6.3	–	–	21	69	60	55	174	210	227	252	211	-6.2	7.4	13	30	45	–	90	80	60
2308	6.3	–	–	21	68	60	52	181	210	228	253	210	-10	7.4	13	30	45	–	90	80	60

Y:\Operations Run\Drawings & Instructions\Equipment Manuals\Dryer Building\Kentucky Dryer\Kentucky Dryer Operator Log Sheet.xlsx

Harrisonburg-Rockingham Regional Sewer Authority
K-S Biosolids drying System 00571

Date: 11-20-19 Operators: 12-8 | 8-4 | 4-12
MS ATB RH
ERM

Operators Log Sheet

STARTED SHUTDOWN

Time	DRYER FEED HOPPER H-1					DRYER - DRY-01									Discharge and Cooling Conveyors						
	Silo level	Feed Pump PCP-1		Feed Pump PCP-2		Motor		Dry Bed Temperatures				Dryer Exhaust		Wetr Level	RV-1	CV-1	CV-2	CV-3	Water	Product	RV-2
	LT-2111	Speed 0-100%	Pressure PIT-2106	Speed 0-100%	Pressure PIT-2105	Speed &	Amps	Bed 1 TE-3002	Bed 2 TE-3005	Bed 3 TE-3008	Bed 4 TE-3007	TT-5000	PIT-3003		Speed 0-100%	Speed 0-100%	Speed 0-100%	Speed 0-100%	Flow FI-4001	Temp TT-4009	Speed 0-100%
	Feet	Hz	PSIG	Hz	PSIG	Hz	Amps	°F	°F	°F	°F	°F	In. WC	In.	Hz	Hz	Hz	%	GPM	°F	Hz
0010	6.5	–	–	21	97	60	51	176	210	230	255	211	-1.0	7.4	13	30	45	–	90	80	60
0139	6.9	–	–	21	67	60	56	177	210	230	256	211	-1.0	7.72	13	30	45	–	90	80	60
0224	7.4	–	–	18	63	60	58	182	215	286	283	214	-1.5	7.0	13	30	45	–	90	75	60
1508	7.8	–	–	20	63	60	57	173	211	283	283	218	-1.1	7.0	13	30	45	–	90	75	60
1710	7.7	–	–	20	66	60	64	169	211	224	243	211	-1.1	7.4	13	30	45	–	90	78	60
1807	7.8	–	–	20	67	60	56	172	211	221	235	212	-1.3	10.5	13	30	45	–	90	79	60
1907	7.8	–	–	20	67	60	60	167	211	222	241	212	-1.1	10.5	13	30	45	–	90	78	60
2019	7.9	–	–	20	67	60	58	178	211	215	246	211	-1.0	10.0	13	30	45	–	90	78	60
2107	8.0	–	–	21	69	60	60	174	211	215	247	211	-1.2	10.3	13	30	45	–	90	77	60
2201	8.2	–	–	21	67	60	60	176	211	214	243	211	-1.2	10.5	13	30	45	–	90	77	60
2305	8.3	-	–	21	67	60	59	183	211	215	237	211	-1.2	10.8	13	30	45	–	90	77	60

KOMline-Sanderson Engineering Corporation

00571 - Operator Data Sheets - Page 1 - Rev D

1030 start-up

F:\Operations Bus\Process & Instrument Equipment Manuals\Dryer Building\Komline Dryer\Komline Dryer Operator Log Sheet.xlsx

Harrisonburg-Rockingham Regional Sewer Authority
K-S Biosolids drying System 00571

Date: 11-21-19 Operators: 12-8 BM | 8-4 | 4-12 CBM

Operators Log Sheet

Time	DRYER FEED HOPPER H-1					DRYER - DRY-01									Discharge and Cooling Conveyors						
	Silo level	Feed Pump PCP-1		Feed Pump PCP-2		Motor		Dry Bed Temperatures				Dryer Exhaust		Wet Level	RV-1	CV-1	CV-2	CV-3	Water	Product	RV-2
	LT-2111	Speed 0-100%	Pressure PIT-2106	Speed 0-100%	Pressure PIT-2105	Speed &	Amps	Bed 1 TE-3002	Bed 2 TE-3006	Bed 3 TE-3008	Bed 4 TE-3007	TT-5000	PIT-3003		Speed 0-100%	Speed 0-100%	Speed 0-100%	Speed 0-100%	Flow FI-4001	Temp TT-4009	Speed 0-100%
	Feet	Hz	PSIG	Hz	PSIG	Hz	Amps	°F	°F	°F	°F	°F	In. WC	In.	Hz	Hz	Hz	%	GPM	°F	Hz
0036	8.4	–	–	21	66	60	58	176	211	221	237	211	-1.0	12.8	13	30	45	–	90	77	60
0118	8.6	–	–	21	67	60	58	191	211	223	240	211	-1.1	12.5	13	30	45	–	90	77	60
0239	8.6	–	–	21	68	60	63	187	211	220	243	211	-1.0	12.0	13	30	45	–	90	77	60
0317	8.6	–	–	21	67	60	60	193	211	217	241	211	-0.9	11.8	13	30	45	–	90	78	60
0432	8.6	–	–	21	68	60	62	190	211	216	238	211	-0.8	12.1	13	30	45	–	90	78	60
0523	8.6	–	–	21	69	60	60	194	211	217	233	211	-0.9	13.0	13	30	45	–	90	80	60
0641	8.7	–	–	21	68	60	60	194	211	219	232	211	-0.9	13.5	13	30	45	–	90	80	60
0729	8.7	–	–	21	69	60	63	191	211	220	232	211	-0.9	13.5	13	30	45	–	90	79	60
1024	8.5	–	–	23	67	60	60	178	211	222	236	211	-1.1	13.5	13	30	45	–	90	79	60
1108	8.5	–	–	23	67	60	62	189	211	220	235	211	-1.3	13.5	13	30	45	–	90	79	60
1311	8.3	–	–	23	68	60	62	184	211	224	241	211	-1.0	13.6	13	30	45	–	90	79	60
1442	8.2	–	–	23	68	60	62	182	211	225	248	211	-1.20	13.2	13	30	45	–		79	60
1619	8.2	–	–	23	71	60	60	188	211	225	256	211	-1.1	12.2	13	30	45	–	90	80	60
1735	8.1	–	–	23	71	60	64	184	211	224	260	211	-0.7	11.6	13	30	45	–	90	81	60
1819	8.2	–	–	23	72	60	58	190	211	222	263	211	-1.1	11.2	13	30	45	–	90	81	60
1909	8.3	–	–	23	71	60	62	186	211	221	260	211	-0.9	10.8	13	30	45	–	90	82	60
2009	8.3	–	–	23	70	60	62	182	211	218	257	211	-1.0	10.6	13	30	45	–	90	82	60
2132	8.4	–	–	23	71	60	60	183	211	217	254	211	-0.9	10.6	12	30	45	–	90	83	60
2213	8.3	–	–	24	71	60	61	178	211	217	253	211	-1.0	10.6	13	30	45	–	90	82	60
2307	8.5	–	–	24	70	60	60	182	211	216	253	210	-1.0	10.6	13	30	45	–	90	82	60

KOMline-Sanderson Engineering Corporation

00571 - Operator Data Sheets - Page 1 - Rev 0

P:\Operations Alert\Process & Instrument Equipment Manuals\Dryer Bulk Mat'ls\KomLine Dryer\KomLine Dryer Operator Log Sheets.xlsx

Harrisonburg-Rockingham Regional Sewer Authority
K-S Biosolids drying System 00571

Date: 11-22-19 Operators: 12-8 BM | 8-4 TM/SE | 4-12 EWM

Operators Log Sheet

Time	DRYER FEED HOPPER H-1					DRYER - DRY-01									Discharge and Cooling Conveyors						
	Silo level	Feed Pump PCP-1		Feed Pump PCP-2		Motor		Dry Bed Temperatures				Dryer Exhaust		Weir Level	RV-1	CV-1	CV-2	CV-3	Water	Product	RV-2
	LT-2111	Speed 0-100%	Pressure PIT-2108	Speed 0-100%	Pressure PIT-2106	Speed &	Amps	Bed 1 TE-3002	Bed 2 TE-3005	Bed 3 TE-3008	Bed 4 TE-3007	TT-5000	PIT-3003		Speed 0-100%	Speed 0-100%	Speed 0-100%	Speed 0-100%	Flow FI-4001	Temp TT-4009	Speed 0-100%
	Feet	Hz	PSIG	Hz	PSIG	Hz	Amps	°F	°F	°F	°F	°F	in. WC	in.	Hz	Hz	Hz	%	GPM	°F	Hz
0012	8.7	—	—	24	69	60	56	181	211	216	248	211	-1.0	10.6	13	30	45	—	90	82	60
0131	8.5	—	—	25	69	60	59	176	211	215	243	211	-1.1	10.7	13	30	45	—	90	82	60
0231	8.6	—	—	25	69	60	62	176	211	215	240	211	-1.1	11.0	13	30	45	—	90	82	60
0317	8.6	—	—	25	68	60	60	175	211	218	239	211	-1.0	11.3	13	30	45	—	90	82	60
0434	8.7	—	—	25	70	60	57	178	211	216	239	211	-0.7	11.7	13	30	45	—	90	81	60
0524	8.4	—	—	25	67	60	58	178	211	216	240	211	-1.3	11.8	13	30	45	—	90	81	60
0650	8.5	—	—	25	65	60	62	183	211	217	242	211	-0.48	12.0	13	30	45	—	90	81	60
0915	8.2	—	—	25	68	60	60	183	211	217	242	211	-0.59	12.1	13	30	45	—	85	81	60
1031	8.3	—	—	25	68	60	57	182	211	217	240	211	-0.85	12.3	13	30	45	—	85	81	60
1304	8.0	—	—	25	68	60	60	183	211	218	240	210	-0.7	13.0	13	30	45	—	85	80	60
1442	7.3	—	—	25	68	60	60	177	210	220	243	210	-1.2	13.1	13	30	45	—	85	80	60
1720	7.0	—	—	25	67	60	56	179	211	221	252	211	-0.9	12.4	13	30	45	—	85	81	60
1817	7.0	—	—	25	67	60	57	180	211	218	251	210	-0.8	12.6	12	30	45	—	85	81	60
1906	6.8	—	—	25	68	60	60	181	211	217	249	211	-0.9	12.0	13	30	45	—	85	82	60
2012	7.1	—	—	25	68	60	63	181	211	217	246	211	-0.8	12.0	13	30	45	—	85	82	60
2109	7.0	—	—	25	67	60	63	183	211	217	246	211	-1.0	12.2	12	30	45	—	85	82	60
2203	7.0	—	—	25	66	60	61	167	211	217	246	211	-0.8	12.3	13	30	45	—	85	82	60
2304	7.1	—	—	25	66	60	61	174	211	217	247	211	-0.9	12.4	13	30	45	—	85	81	60

Harrisonburg-Rockingham Regional Sewer Authority
K•S Biosolids drying System 00571

Date: 11-23-19 Operators: M-N / TAS | N-M / BSS

Operators Log Sheet

Time	DRYER FEED HOPPER H-1					DRYER - DRY-01									Discharge and Cooling Conveyors						
	Silo level	Feed Pump PCP-1		Feed Pump PCP-2		Motor		Dry Bed Temperatures				Dryer Exhaust		Weir Level	RV-1	CV-1	CV-2	CV-3	Water	Product	RV-2
	LT-2111	Speed 0-100%	Pressure PIT-2106	Speed 0-100%	Pressure PIT-2105	Speed &	Amps	Bed 1 TE-3002	Bed 2 TE-3005	Bed 3 TE-3006	Bed 4 TE-3007	TT-5000	PIT-3003		Speed 0-100%	Speed 0-100%	Speed 0-100%	Speed 0-100%	Flow FI-4001	Temp TT-4009	Speed 0-100%
	Feet	Hz	PSIG	Hz	PSIG	Hz	Amps	°F	°F	°F	°F	°F	in. WC	in.	Hz	Hz	Hz	%	GPM	°F	Hz
0545	7.1	–	–	25	66	60	57	181	211	217	246	24	-.80	12.4	13	30	45	–	90	81	60
204	7.1	–	–	25	67	60	60	175	211	217	244	210	-1.0	12.7	13	30	45	–	85	81	60
300	7.1	–	–	25	66	60	56	175	211	218	244	211	-.97	12.9	12	30	45	–	85	81	60
402	7.2	–	–	25	67	60	59	178	211	219	233	211	-1.3	12.9	13	30	45	–	85	81	60
500	7.1	–	–	25	68	60	60	179	210	219	243	211	-.87	13.5	13	30	45	–	85	81	60
600	7.1	–	–	25	68	60	61	182	211	220	243	210	-.90	13.5	13	30	45	–	85	81	60
712	7.2	–	–	25	69	60	59	181	211	221	244	210	-.74	14.0	13	30	45	–	85	80	60
801	7.1	–	–	25	69	60	61	185	211	222	246	210	-.74	14.2	13	30	45	–	85	80	60
902	7.2	–	–	25	68	60	58	177	211	223	249	210	-.75	14.2	13	30	45	–	85	80	60
955	7.0	–	–	25	67	60	62	181	211	223	250	210	-1.0	14.2	12	30	45	–	85	80	60
1100	7.0	–	–	25	68	60	60	179	211	223	250	210	-.67	14.2	13	30	45	–	85	80	60
1301	7.0	–	–	25	68	60	63	179	211	226	241	210	-.54	14.6	13	30	45	–	85	81	60
1412	6.4	–	–	25	67	60	61	183	211	230	246	210	-.64	14.6	13	30	45	–	85	80	60
1516	6.5	–	–	25	68	60	62	181	211	237	254	210	-.57	14.6	13	30	45	–	85	79	60
1618	6.6	–	–	25	68	60	60	180	211	243	264	210	-.54	14.0	13	30	45	–	85	78	60
1703	6.6	–	–	25	68	60	60	174	211	249	271	210	-.55	13.6	13	30	45	–	7885	78	60
1819	6.5	–	–	25	71	60	57	183	211	253	283	210	-4.4	12.8	13	30	45	–	85	78	60
2326	8.4	–	–	25	69	60	57	176	218	294	287	210	-.65	12.0	12	30	45	–	85	77	60

KOBLINE-SANDERSON ENGINEERING CORPORATION

00571 - Operator Data Sheets - Page 1 - Rev 0

F:\Operations Shared\Process & Instrument Equipment Manuals\Dryer Building\Kruger Dryer\Kruger Dryer Operator Log Sheets.xlsx

Harrisonburg-Rockingham Regional Sewer Authority
K&S Biosolids drying System 00571

Date: 11/25/19 Operators: 8-4 ATB 4-12 MS

Operators Log Sheet

Time	DRYER FEED HOPPER H-1					DRYER - DRY-01									Discharge and Cooling Conveyors						
	Silo level	Feed Pump PCP-1		Feed Pump PCP-2		Motor		Dry Bed Temperatures				Dryer Exhaust		Weir Level	RV-1	CV-1	CV-2	CV-3	Water	Product	RV-2
	LT-2111	Speed 0-100%	Pressure PIT-2106	Speed 0-100%	Pressure PIT-2105	Speed &	Amps	Bed 1 TE-3002	Bed 2 TE-3005	Bed 3 TE-3006	Bed 4 TE-3007	TT-5000	PIT-3003		Speed 0-100%	Speed 0-100%	Speed 0-100%	Speed 0-100%	Flow FI-4001	Temp TT-4009	Speed 0-100%
	Feet	Hz	PSIG	Hz	PSIG	Hz	Amps	°F	°F	°F	°F	°F	In. WC	In.	Hz	Hz	Hz	%	GPM	°F	Hz
10:00	8.9	16 Hz	114	–	–	60	53	202	226	227	213	192	-1.48	9.9	12	30	45	–	85	63	60
11:10	8.4	16	84	–	–	60	56	205	236	277	268	210	-1.4	9.4	12	30	45	–	85	66	60
13:01	6.9	16	80	–	–	60	62	195	212	283	280	211	-0.98	9.2	12	30	45	–	85	71	60
15:19	6.6	16	80	–	–	60	72	198	211	207	268	210	-0.83	10.1	12	30	45	–	85	75	60
1757	8.2	16	81	–	–	60	76	194	211	218	237	210	-1.3	10.3	12	30	45	–	85	81	60
1955	8.5	17	86	–	–	60	65	185	211	220	242	210	-0.9	10.3	13	30	45	–	85	78	60
2217	8.5	18	85	–	–	59	62	187	211	237	265	210	-0.01	10.3	12	30	45	–	85	75	60
2350	8.8	18	82	–	–	60	60	194	211	229	266	210	-0.80	10.2	12	30	45	–	85	77	60

KOMLINE-SANDERSON ENGINEERING CORPORATION

00571 - Operator Data Sheets - Page 1 - Rev D

* Started dryer up at 8:40

P:\Operations Shared\Process & Instrument Equipment Manuals\Dryer Building\Drying Facility\Dryer Operator Log Sheet.xlsx

Harrisonburg-Rockingham Regional Sewer Authority
K•S Biosolids drying System 00571

Operators Log Sheet

Date: 11/26/19

Operators:	12-8	8-4	4-12
	TK	SC	MB

Time	DRYER FEED HOPPER H-1					DRYER - DRY-01									Discharge and Cooling Conveyors						
	Silo level	Feed Pump PCP-1		Feed Pump PCP-2		Motor		Dry Bed Temperatures				Dryer Exhaust		Weir Level	RV-1	CV-1	CV-2	CV-3	Water	Product	RV-2
	LT-2111	Speed 0-100%	Pressure PIT-2106	Speed 0-100%	Pressure PIT-2105	Speed &	Amps	Bed 1 TE-3002	Bed 2 TE-3005	Bed 3 TE-3006	Bed 4 TE-3007	TT-6000	PIT-3003		Speed 0-100%	Speed 0-100%	Speed 0-100%	Speed 0-100%	Flow FI-4001	Temp TT-4009	Speed 0-100%
	Feet	Hz	PSIG	Hz	PSIG	Hz	Amps	°F	°F	°F	°F	°F	in. WC	in.	Hz	Hz	Hz	%	GPM	°F	Hz
1041	86	18	86	—	—	60	66	192	211	220	210	210	-.93	10.0	12	30	45	—	85	78	60
209	85	18	82	—	—	60	62	179	211	218	253	210	-.81	10.0	12	30	45	-	85	79	60
258	88	18	82	—	—	60	67	185	211	217	251	210	-1.2	10.0	12	30	45	-	85	79	60
406	76	18	81	—	—	60	62	194	211	217	249	210	-1.0	10.0	12	30	45	-	85	79	60
457	70	18	81	—	—	60	61	185	211	217	247	210	-1.2	10.2	12	30	45	-	85	78	60
5:30	6.4	18	80	—	—	60	64	199	211	217	246	210	-1.2	10.0	12	30	45	-	85	78	60
6:45	5.8	15	80	—	—	60	63	200	211	217	245	210	-.80	10.0	12	30	45	-	85	78	60
911	7.4	18	81	—	—	60	61	208	212	271	270	210	-.66	9.4	12	30	45	-	85	77	60
1149	8.1	16	81	—	—	60	63	196	211	282	285	210	-1.0	9.2	12	30	45	-	80	77	60
1248	7.6	18	86	—	—	60	60	192	211	272	285	210	-.8	9.0	12	30	45	—	80	80	60
1432	6.7	18	85	—	—	60	61	185	211	260	284	210	-.8	9.0	12	30	45	—	80	80	60
1525	6.8	18	84	—	—	60	57	200	211	256	281	210	-0.80	8.8	12	30	45	—	80	79	60
1627	7.7	20	84	—	—	59	61	207	211	264	276	211	-0.80	8.8	12	30	45	—	80	80	60
1811	8.0	20	84	—	—	60	58	196	211	272	279	210	-0.80	8.8	12	30	45	—	80	80	60
1927	8.3	20	83	—	—	60	56	191	211	267	278	211	-0.80	8.6	12	30	45	-	80	80	60
2146	7.8	20	84	—	—	60	59	190	211	227	264	211	-0.84	8.6	12	30	45	-	80	81	60
2254	8.2	20	84	—	—	60	57	197	211	230	260	211	-0.80	8.8	12	30	45	—	80	81	60

KOMLINE-SANDERSON ENGINEERING CORPORATION

00571 - Operator Data Sheets - Page 1 - Rev 0

P:\Operations Share\Process & Instrument Drawings\Dryer Building\Complete Dryer\Existing Dryer Operator Log Sheets.xlsx

Harrisonburg-Rockingham Regional Sewer Authority
KeS Biosolids drying System 00571

Date: 11-27-19 Operators: 12-8 / 8-4 / 4-12 TB / MS

Operators Log Sheet

Time	DRYER FEED HOPPER H-1					DRYER - DRY-01									Discharge and Cooling Conveyors						
	Silo level	Feed Pump PCP-1		Feed Pump PCP-2		Motor		Dry Bed Temperatures				Dryer Exhaust		Wair Level	RV-1	CV-1	CV-2	CV-3	Water	Product	RV-2
	LT-2111	Speed 0-100%	Pressure PIT-2106	Speed 0-100%	Pressure PIT-2105	Speed &	Amps	Bed 1 TE-3002	Bed 2 TE-3005	Bed 3 TE-3006	Bed 4 TE-3007	TT-6000	PIT-3003		Speed 0-100%	Speed 0-100%	Speed 0-100%	Speed 0-100%	Flow FI-4001	Temp TT-4009	Speed 0-100%
	Feet	Hz	PSIG	Hz	PSIG	Hz	Amps	°F	°F	°F	°F	°F	in. WC	in.	Hz	Hz	Hz	%	GPM	°F	Hz
0057	8.4	20	84	–	–	60	55	200	211	230	259	211	-.6	8.8	12	30	45	–	80	80	60
205	8.8	20	84	–	–	60	57	200	211	230	259	211	-.6	8.8	12	30	45	–	80	80	60
3:00	9.0	20	84	–	–	60	61	194	211	231	259	211	-.5	8.8	12	30	45	–	80 75	80	60
403	8.4	20	86	–	–	60	58	195	211	230	259	210	-1.0	8.8	12	30	45	–	75	79	60
5:01	8.5	20	86	–	–	60	57	198	211	230	260	211	-.4	8.8	12	30	45	–	75	79	60
557	9.0	20	86	–	–	60	57	194	210	231	260	210	-1.0	8.8	12	30	45	–	75	79	60
6:50	9.0	21	86	–	–	60	56	192	211	224	261	210	-.8	8.8	12	30	45	–	75	79	60
812	8.7	21	86	–	–	60	57	194	211	216	255	211	-0.8	8.8	12	30	45	–	79	79	60
907	8.4	21	86	–	–	60	56	191	211	214	250	210	-1.0	9.1	12	30	45	–	75	79	60
1112	8.1	21	86	–	–	60	57	191	210	213	250	210	-0.9	9.3	12	30	45	–	75	78	60
1200	8.7	21	85	–	–	60	60	183	210	213	248	210	-0.8	9.3	12	30	45	–	75	78	60
1250	8.3	21	85	–	–	60	58	189	210	213	246	210	-0.9	9.9	12	30	45	–	75	79	60
1355	8.3	21	86	–	–	60	58	183	210	214	244	210	-0.4	9.9	12	30	45	–	75	78	60
1438	8.9	21	86	–	–	59	62	183	210	214	248	210	-0.4	9.9	12	30	45	–	75	76	60
1513	8.2	22	86	–	–	60	61	186	210	213	242	210	-0.5	10.3	12	30	45	–	75	78	60
1705	8.7	22	86	–	–	60	61	183	210	213	234	210	-0.5	10.5	12	30	45	–	75	79	60
1912	8.4	22	85	–	–	60	61	179	210	214	231	210	-0.8	11.3	12	30	45	–	75	79	60
2116	8.5	22	86	–	–	59	58	185	210	215	236	211	-0.8	11.3	12	30	45	–	75	78	60
2256	7.0	22	86	–	–	60	62	188	211	215	238	211	-0.9	11.3	12	30	45	–	75	78	60

KOMline-Sanderson Engineering Corporation

D0571 - Operator Data Sheets - Page 1 - Rev D

P:\Operations Share\Process & Instrument Equipment Maintenance\Dryer Building\Komline Dryer\Komline Dryer Operator Log Sheet.xlsx

Harrisonburg-Rockingham Regional Sewer Authority
K-S Biosolids drying System 00571

Date: 11-28-19 Operators: TA 12-8 | 8-4 | 4-12

Operators Log Sheet

Time	DRYER FEED HOPPER H-1					DRYER - DRY-01									Discharge and Cooling Conveyors						
	Silo level	Feed Pump PCP-1		Feed Pump PCP-2		Motor		Dry Bed Temperatures				Dryer Exhaust		Weir Level	RV-1	CV-1	CV-2	CV-3	Water	Product	RV-2
	LT-2111	Speed 0-100%	Pressure PIT-2106	Speed 0-100%	Pressure PIT-2105	Speed &	Amps	Bed 1 TE-3002	Bed 2 TE-3005	Bed 3 TE-3006	Bed 4 TE-3007	TT-6000	PIT-3003		Speed 0-100%	Speed 0-100%	Speed 0-100%	Speed 0-100%	Flow FI-4001	Temp TT-4009	Speed 0-100%
	Feet	Hz	PSIG	Hz	PSIG	Hz	Amps	°F	°F	°F	°F	°F	In. WC	In.	Hz	Hz	Hz	%	GPM	°F	Hz
0057	87	22	86	–	–	60	58	185	211	215	236	24	-1.3	11.3	12	30	45	–	75	79	60
203	89	22	87	–	-	60	62	188	24	216	237	24	-1.2	11.3	12	30	45	–	75	79	60
205	88	22	87	–	–	60	58	190	210	216	239	211	-1.3	11.3	12	30	45	-	75	78	60

KOMLINE-SANDERSON ENGINEERING CORPORATION

00571 - Operator Data Sheets - Page 1 - Rev D

F:\Operations Shared\Process & Instrument Equipment Manuals\Dryer Data\Kos-Sun Dryer\Kos-Sun Dryer Operator Log Sheets.xlsx

Harrisonburg-Rockingham Regional Sewer Authority
K-S Biosolids drying System 00571

Date: 12/2/19

Operators: 8-4: ATB, MS | 4-12:

Operators Log Sheet

Time	DRYER FEED HOPPER H-1					DRYER - DRY-01									Discharge and Cooling Conveyors						
	Silo level	Feed Pump PCP-1		Feed Pump PCP-2		Motor		Dry Bed Temperatures				Dryer Exhaust		Weir Level	RV-1	CV-1	CV-2	CV-3	Water	Product	RV-2
	LT-2111	Speed 0-100%	Pressure PIT-2106	Speed 0-100%	Pressure PIT-2105	Speed &	Amps	Bed 1 TE-3002	Bed 2 TE-3005	Bed 3 TE-3006	Bed 4 TE-3007	TT-5000	PIT-3003		Speed 0-100%	Speed 0-100%	Speed 0-100%	Speed 0-100%	Flow FI-4001	Temp TT-4009	Speed 0-100%
	Feet	Hz	PSIG	Hz	PSIG	Hz	Amps	°F	°F	°F	°F	°F	In. WC	In.	Hz	Hz	Hz	%	GPM	°F	Hz
1408	8.5	15	/	15	62	60	55	197	264	277	268	209	-1.2	11.7	12	30	45	~~60~~	90	73	60
1529	8.8	—	—	15	60	60	53	197	231	284	278	209	-1.0	11.5	12	30	45	—	89	75	60
1649	8.9	—	—	15	61	60	56	200	213	285	280	210	-1.2	11.0	12	30	45	—	·	76	60

KOMline-Sanderson Engineering Corporation

00571 - Operator Data Sheet - Page 1 - Rev D

*Started up at 12:00 pm

P:\Operations Docs\Process & Instrument Equipment Manuals\Dryer Building\Komline Dryer\Komline Dryer Operator Log Sheets.xlsx

Harrisonburg-Rockingham Regional Sewer Authority
K•S Biosolids drying System 00571

Date: 12/3/19

Operators: 8-4 ATB + JC | 4-12 MS

Operators Log Sheet

Time	DRYER FEED HOPPER H-1					DRYER - DRY-01									Discharge and Cooling Conveyors						
	Silo level	Feed Pump PCP-1		Feed Pump PCP-2		Motor		Dry Bed Temperatures				Dryer Exhaust		Weir Level	RV-1	CV-1	CV-2	CV-3	Water	Product	RV-2
	LT-2111	Speed 0-100%	Pressure PIT-2108	Speed 0-100%	Pressure PIT-2105	Speed &	Amps	Bed 1 TE-3002	Bed 2 TE-3006	Bed 3 TE-3006	Bed 4 TE-3007	TT-5000	PIT-3003		Speed 0-100%	Speed 0-100%	Speed 0-100%	Speed 0-100%	Flow FI-4001	Temp TT-4009	Speed 0-100%
	Feet	Hz	PSIG	Hz	PSIG	Hz	Amps	°F	°F	°F	°F	°F	in. WC	in.	Hz	Hz	Hz	%	GPM	°F	Hz
13:35	7.1	–	–	15	60	60	55	195	215	281	278	213	-1.1	11.0	12	30	45	–	90	76	60
15:16	6.3	–	–	15	59	60	64	192	212	282	281	211	-0.92	11.0	12	30	45	–	90	76	60
1913	5.8	–	–	15	64	59	77	191	211	241	261	210	-0.50	11.0	12	30	45	–	90	81	60
2116	6.1	–	–	16	68	59	72	191	211	235	263	210	-0.40	10.9	12	30	45	–	90	81	60
2330	6.5	–	–	16	75	60	74	189	211	224	255	210	-0.16	10.9	12	30	45	–	90	81	60

KOMline-Sanderson Engineering Corporation

00571 - Operator Data Sheets - Page 1 - Rev 0

* Started dryer up at ~~9:00 am~~ 11:30 am

Harrisonburg-Rockingham Regional Sewer Authority
K-S Biosolids drying System 00571

Date: 12-4-19

Operators: 12-8 tem | 8-4 tmy/JC | 4-12 BM

Operators Log Sheet

Time	DRYER FEED HOPPER H-1					DRYER - DRY-01									Discharge and Cooling Conveyors						
	Silo level	Feed Pump PCP-1		Feed Pump PCP-2		Motor		Dry Bed Temperatures				Dryer Exhaust		Weir Level	RV-1	CV-1	CV-2	CV-3	Water	Product	RV-2
	LT-2111	Speed 0-100%	Pressure PIT-2108	Speed 0-100%	Pressure PIT-2105	Speed &	Amps	Bed 1 TE-3002	Bed 2 TE-3005	Bed 3 TE-3006	Bed 4 TE-3007	TT-5000	PIT-3003		Speed 0-100%	Speed 0-100%	Speed 0-100%	Speed 0-100%	Flow FI-4001	Temp TT-4002	Speed 0-100%
	Feet	Hz	PSIG	Hz	PSIG	Hz	Amps	°F	°F	°F	°F	°F	in. WC	in.	Hz	Hz	Hz	%	GPM	°F	Hz
0646	6.0	—	—	16	77	60	64	190	211	224	255	210	-1.0	11.0	12	30	45	—	90	80	60
149	6.3	—	—	16	77	60	65	183	211	226	256	209	-1.4	10.9	12	30	45	—	90	80	60
240	6.3	-	-	16	78	60	64	189	211	226	256	210	-0.4	10.9	12	30	45	-	90	80	60
319	5.9	-	-	16	79	60	71	192	211	226	256	209	-1.1	10.8	12	30	45	-	90	80	60
410	5.1	-	-	16	80	60	64	192	211	226	258	209	-0.9	10.6	12	30	45	-	90	80	60
510	4.3	-	-	16	81	60	64	195	211	227	259	209	-1.1	10.6	12	30	45	—	90	80	60
632	4.6	-	-	16	80	60	62	192	211	227	256	209	-1.0	10.0	12	30	45	-	90	80	60
732	4.9	—	—	16	81	60	63	190	211	223	253	210	-0.3	9.4	12	30	45	—	90	81	60
828	5.3	—	—	16	82	60	65	192	211	222	250	209	-1.3	9.4	12	30	45	—	90	81	60
935	5.6	-	-	16	82	60	62	191	211	228	250	210	-.5	9.4	12	30	45	—	90	81	60
1022	5.8	15	95	—	—	60	65	197	211	244	253	209	-1.0	9.4	12	30	45	—	90	80	60
1150	6.1	17	107	—	—	60	67	190	211	247	257	209	-.9	8.5	12	30	45	—	90	79	60
1252	5.8	17	104	—	—	60	76	188	210	232	245	209	-.2	8.5	12	30	45	—	90	80	60
1345	6.4	18	106	—	—	60	65	191	211	234	246	209	-.9	8.8	12	30	45	—	90	80	60
1530	6.5	18	110	—	—	60	63	199	211	234	246	209	-.9	8.8	12	30	45	—	90	80	60
1713	6.1	18	118	—	—	60	61	199	211	229	245	210	-0.7	8.8	12	30	45	—	90	80	60
1825	6.6	18	118	—	—	60	61	192	211	228	242	210	-0.7	8.8	12	30	45	—	90	80	60
1939	6.4	18	118	—	—	60	59	193	211	228	244	210	-0.7	9.2	12	30	45	—	90	80	60
2053	6.7	18	115	—	—	60	60	189	211	232	247	210	-0.7	9.2	12	30	45	—	90	80	60
2129	6.2	18	115	—	—	60	60	192	211	231	247	210	-0.9	9.2	12	30	45	—	90	80	60
2237	6.4	18	115	—	—	60	60	175	211	227	245	210	-0.9	9.1	12	30	45	—	90	80	60
2318	6.6	18	117	—	—	60	60	194	211	225	244	210	-0.8	9.1	12	30	45	—	90	80	60

Harrisonburg-Rockingham Regional Sewer Authority
K-S Biosolids drying System 00571

Date: 12-5-19 Operators: 12-8 Ekm | 8-4 | 4-12 BM

Operators Log Sheet

Time	DRYER FEED HOPPER H-1					DRYER - DRY-01									Discharge and Cooling Conveyors						
	Silo level	Feed Pump PCP-1		Feed Pump PCP-2		Motor		Dry Bed Temperatures				Dryer Exhaust		Weir Level	RV-1	CV-1	CV-2	CV-3	Water	Product	RV-2
	LT-2111	Speed 0-100%	Pressure PIT-2106	Speed 0-100%	Pressure PIT-2105	Speed	Amps	Bed 1 TE-3002	Bed 2 TE-3005	Bed 3 TE-3006	Bed 4 TE-3007	TT-5000	PIT-3003		Speed 0-100%	Speed 0-100%	Speed 0-100%	Speed 0-100%	Flow FI-4001	Temp TT-4009	Speed 0-100%
	Feet	Hz	PSIG	Hz	PSIG	Hz	Amps	°F	°F	°F	°F	°F	In. WC	In.	Hz	Hz	Hz	%	GPM	°F	Hz
1254	5.3	18	117	–	–	59	70	182	211	224	241	210	-0.8	9.1	12	30	45	–	90	79	60
148	4.8	18	115	–	–	60	69	181	211	225	241	210	-0.8	9.7	12	30	45	–	90	79	60
224	4.4	19	114	–	–	60	64	181	211	223	244	210	-0.7	9.7	12	30	45	–	90	79	60
311	3.9	19	115	–	–	60	60	172	211	219	245	210	-0.7	9.7	12	30	45	–	90	78	60
408	3.8	18	112	–	–	60	61	185	211	217	247	210	-0.8	10.0	12	30	45	–	90	78	60
511	4.2	18	111	–	–	60	61	184	211	216	247	210	-0.8	10.0	12	30	45	–	90	78	60
610	4.5	19	113	–	–	60	63	178	211	217	245	210	-0.7	10.0	12	30	45	–	90	77	60
727	4.5	19	113	–	–	60	60	178	211	216	240	210	-0.9	10.9	12	30	45	–	90	77	60
845	5.1	19	111	–	–	60	59	193	211	226	247	210	-.6	11.4	12	30	45	–	90	78	60
959	5.3	19	110	–	–	60	59	185	211	229	264	210	-.8	11.2	12	30	45	–	90	77	60
1108	5.1	17	111	–	–	60	62	190	211	235	268	210	-.8	11.2	12	30	45	–	90	77	60
1149	5.4	19	112	–	–	60	67	178	211	232	268	210	-1.1	10.9	12	30	45	–	90	78	60
1255	5.6	19	116	–	–	60	70	190	211	227	268	210	-1.1	10.9	12	30	45	–	90	78	60
1402	5.7	19	118	–	–	60	70	188	211	222	260	210	-1.0	10.7	12	30	45	–	90	78	60
1515	5.8	19	116	–	–	60	72	187	211	218	247	210	-.9	10.7	12	30	45	–	90	79	60
1618	5.8	19	117	–	–	60	65	193	211	218	239	210	-1.2	10.9	12	30	45	–	90	80	60
1831	5.7	19	116	–	–	60	61	188	211	220	240	210	-0.9	11.1	12	30	45	–	90	80	60
1918	6.1	19	115	–	–	60	61	190	211	220	241	210	-1.2	11.1	12	30	45	–	90	80	60
2100	5.9	19	113	–	–	60	TO	189	211	220	243	210	-1.0	11.1	12	30	45	–	90	80	60
2226	6.0	19	118	–	–	60	TT	185	211	220	244	210	-1.0	11.1	12	30	45	–	90	79	60
2317	5.9	19	110	–	–	60	63	189	211	220	244	210	-1.0	11.1	12	30	45	–	90	79	60

KOMline-Sanderson Engineering Corporation

00571 - Operator Data Sheets - Page 1 - Rev D

P:\Operations Stuff\Process & Instrument Hydrocyclone Mr. and\Dryer Bulk\Logs\Kentucky Dryer\Kentucky Dryer Operator Log Sheets.xlsx

Harrisonburg-Rockingham Regional Sewer Authority
K-S Biosolids drying System 00571

Date: 12/6/19

Operators: 12-8 EBW / 8-4 TAS / 4-12 BAR

Operators Log Sheet

Time	DRYER FEED HOPPER H-1					DRYER - DRY-01									Discharge and Cooling Conveyors						
	Silo level	Feed Pump PCP-1		Feed Pump PCP-2		Motor		Dry Bed Temperatures				Dryer Exhaust		Weir Level	RV-1	CV-1	CV-2	CV-3	Water	Product	RV-2
	LT-2111	Speed 0-100%	Pressure PIT-2106	Speed 0-100%	Pressure PIT-2105	Speed &	Amps	Bed 1 TE-3002	Bed 2 TE-3006	Bed 3 TE-3008	Bed 4 TE-3007	TT-6000	PIT-3003		Speed 0-100%	Speed 0-100%	Speed 0-100%	Speed 0-100%	Flow FI-4001	Temp TT-4000	Speed 0-100%
	Feet	Hz	PSIG	Hz	PSIG	Hz	Amps	°F	°F	°F	°F	°F	in. WC	in.	Hz	Hz	Hz	%	GPM	°F	Hz
0055	5.9	19	106	—	—	60	68	176	211	219	242	210	-0.9	11.1	12	30	45	—	90	80	60
152	6.0	19	107	—	—	60	66	188	211	219	240	210	-1.0	11.5	12	30	45	—	90	79	60
219	6.1	19	107	—	—	60	64	186	211	219	240	210	-0.9	11.5	12	30	45	—	90	80	60
305	6.1	19	106	—	—	60	60	186	211	220	239	210	-0.9	11.5	12	30	45	—	90	80	60
409	6.1	19	107	—	—	60	66	187	211	221	242	210	-1.3	11.9	12	30	45	—	90	79	60
515	6.3	19	107	—	—	60	63	187	211	222	244	210	-0.9	11.9	12	30	45	—	90	79	60
614	6.3	19	108	—	—	60	64	185	211	221	245	210	-0.9	11.9	12	30	45	—	90	79	60
735	6.4	19	110	—	—	60	61	187	211	222	245	210	-1.0	11.9	12	30	45	—	90	79	60
910	6.5	19	109	—	—	60	62	178	211	221	245	210	-.84	11.9	12	30	45	—	90	79	60
1022	5.6	19	105	—	—	60	65	182	211	222	244	210	-1.1	11.9	12	30	45	—	90	79	60
1154	4.4	19	106	—	—	60	65	185	211	221	243	210	-.8	11.9	12	30	45	—	90	79	60
1351	4.0	19	102	—	—	60	60	174	211	222	246	210	-.9	12.1	12	30	45	—	90	79	60
1615	4.3	19	106	—	—	60	60	189	211	222	247	210	-.9	11.9	12	30	45	—	90	79	60
1716	4.3	19	113	—	—	60	62	189	211	221	242	210	-0.9	11.9	12	30	45	—	90	80	60
1925	4.7	19	113	—	—	60	71	186	211	220	240	210	-0.9	11.9	12	30	45	—	90	80	60
1921	4.8	19	113	—	—	60	60	189	211	221	241	210	-0.8	11.9	12	30	45	—	90	80	60
2030	5.2	19	110	—	—	60	60	193	211	222	243	210	-0.8	11.9	12	30	45	—	90	79	60
2120	5.4	19	112	—	—	60	62	181	211	223	246	210	-0.9	11.9	12	30	45	—	90	79	60
2230	5.5	19	88	—	—	60	62	187	211	223	248	210	-0.8	11.9	12	30	45	—	90	79	60
2310	5.6	19	85	—	—	60	64	188	211	223	249	210	-1.2	11.9	12	30	45	—	90	79	60

KOMline-Sanderson Engineering Corporation

00571 - Operator Data Sheets - Page 1 - Rev D

F:\Operations Share\Process & Instrument Equipment Manuals\Dryer Building\Komline Dryer\Komline Dryer Operator Log Sheets.xlsx

Harrisonburg-Rockingham Regional Sewer Authority
K-S Biosolids drying System 00571

Date: 12-7-19 Operators: M-N / N-M
1355 / TS

Operators Log Sheet

Time	DRYER FEED HOPPER, H-1					DRYER - DRY-01									Discharge and Cooling Conveyors						
	Silo level	Feed Pump PCP-1		Feed Pump PCP-2		Motor		Dry Bed Temperatures				Dryer Exhaust		Weir Level	RV-1	CV-1	CV-2	CV-3	Water	Product	RV-2
	LT-2111	Speed 0-100%	Pressure PIT-2108	Speed 0-100%	Pressure PIT-2105	Speed &	Amps	Bed 1 TE-3002	Bed 2 TE-3005	Bed 3 TE-3008	Bed 4 TE-3007	TT-5000	PIT-3003		Speed 0-100%	Speed 0-100%	Speed 0-100%	Speed 0-100%	Flow FI-4001	Temp TT-4009	Speed 0-100%
	Feet	Hz	PSIG	Hz	PSIG	Hz	Amps	°F	°F	°F	°F	°F	in. WC	in.	Hz	Hz	Hz	%	GPM	°F	Hz
0124	6.7	19	82	–	-	60	60	206	211	227	260	210	-1.1	11.9	12	30	45	-	90	80	60
0207	6.3	19	82	–	–	60	56	194	212	255	268	210	-0.6	9.8	12	30	45	-	90	80	60
0308	6.5	19	83	-	–	60	63	196	212	236	269	210	-0.9	9.2	12	30	45	-	90	80	60
0353	6.5	19	83	–	–	60	61	190	212	234	267	210	-0.8	9.5	12	30	45	-	90	82	60
0505	5.5	19	84	–	–	60	60	191	212	226	264	210	-0.6	9.8	12	30	45	-	90	83	60
0605	5.7	19	86	-	-	60	63	190	212	219	259	210	-0.6	10.1	12	30	45	-	90	83	60
0708	5.8	19	87	-	-	60	62	189	212	218	253	210	-0.5	10.1	12	30	45	-	90	82	60
0804	6.1	19	87	-	-	60	63	179	212	218	250	210	-0.5	10.6	12	30	45	-	90	82	60
0905	6.3	19	89	-	-	60	65	176	212	219	247	210	-1.2	10.6	12	30	45	-	90	81	60
1000	5.3	19	88	-	–	60	62	178	212	218	244	210	-0.9	11.0	12	30	45	-	90	81	60
1109	5.0	19	88	–	-	60	61	178	212	218	243	210	-0.9	11.5	12	30	45	-	90	80	60
1255	5.5	19	86	-	-	60	62	182	211	218	235	210	-0.8	11.7	12	30	45	-	90	80	60
1409	5.8	20	88	–	–	60	62	182	212	219	235	210	-.6	11.5	12	30	45	-	90	80	60
1502	5.9	20	89	–	–	60	60	183	212	219	235	210	-.7	11.5	12	30	45	-	90	80	60
1603	6.1	20	89	–	–	60	60	179	211	219	236	210	-.8	11.5	12	30	45	-	90	80	60
1709	6.4	20	89	–	–	60	62	180	212	219	239	210	-.9	11.5	12	30	45	-	90	81	60
1819	6.3	20	89	–	–	60	63	175	212	219	243	210	-.9	11.3	12	30	45	-	90	81	60
1906	6.5	20	88	–	–	60	61	180	212	219	246	210	-.7	11.1	12	30	45	-	90	81	60
2008	6.6	21	88	–	–	60	62	183	212	220	249	210	-1.0	10.9	12	30	45	-	90	81	60
2107	6.6	21	88	–	–	60	62	183	212	219	247	210	-1.1	10.7	12	30	45	-	90	82	60
2220	5.8	21	88	–	–	60	63	179	212	217	243	210	-.8	10.7	12	30	45	-	90	82	60
2326	6.0	21	88	–	–	60	61	179	212	216	243	210	-.9	10.7	12	30	45	-	90	83	60

Harrisonburg-Rockingham Regional Sewer Authority
K-S Biosolids drying System 00571

Date: 12-8-19

Operators: M-N / N-M
BSS / TRS

Operators Log Sheet

Time	DRYER FEED HOPPER H-1					DRYER - DRY-01									Discharge and Cooling Conveyors						
	Silo level	Feed Pump PCP-1		Feed Pump PCP-2		Motor		Dry Bed Temperatures				Dryer Exhaust		Weir Level	RV-1	CV-1	CV-2	CV-3	Water	Product	RV-2
	LT-2111	Speed 0-100%	Pressure PIT-2108	Speed 0-100%	Pressure PIT-2105	Speed &	Amps	Bed 1 TE-3002	Bed 2 TE-3005	Bed 3 TE-3006	Bed 4 TE-3007	TT-5030	PIT-3003		Speed 0-100%	Speed 0-100%	Speed 0-100%	Speed 0-100%	Flow FI-4001	Temp TT-4009	Speed 0-100%
	Feet	Hz	PSIG	Hz	PSIG	Hz	Amps	°F	°F	°F	°F	°F	in. WC	in.	Hz	Hz	Hz	%	GPM	°F	Hz
0107	6.2	21	88	–	–	60	56	182	212	218	253	210	-0.5	10.7	12	30	45	–	90	82	60
0207	6.3	21	88	–	–	60	60	183	212	219	260	210	-0.6	10.7	12	30	45	–	90	82	60
0304	6.3	21	88	–	–	60	62	185	212	220	263	210	-0.6	10.5	12	30	45	–	90	82	60
0405	6.4	21	88	–	–	60	58	180	212	220	265	210	-0.5	10.5	12	30	45	–	90	82	60
0511	6.5	21	88	–	–	60	62	178	212	219	264	210	-1.2	10.5	12	30	45	–	90	83	60
0609	6.6	21	88	–	–	60	62	180	212	218	262	210	-0.5	10.5	12	30	45	–	90	82	60
0707	6.7	21	89	–	–	60	56	184	212	218	261	210	-0.5	10.5	12	30	45	–	90	83	60
0803	5.6	21	88	–	–	60	59	174	212	217	259	210	-0.4	10.5	12	30	45	–	90	82	60
0911	5.9	21	89	–	–	60	61	182	212	218	260	210	-0.5	10.5	12	30	45	–	90	82	60
1113	6.2	21	89	–	–	60	60	182	212	219	262	210	-0.9	10.5	12	30	45	–	90	82	60
1306	6.3	21	90	–	–	60	62	179	211	218	264	210	-1.1	10.5	12	30	45	–	90	81	60
1410	6.4	21	90	–	–	60	58	180	211	217	264	210	-1.0	10.3	12	30	45	–	90	81	60
1512	6.5	21	90	–	–	60	61	178	211	218	262	210	-0.8	10.3	12	30	45	–	90	82	60
1602	6.6	21	89	–	–	60	58	184	211	217	261	210	-0.8	10.3	12	30	45	–	90	82	60
1709	6.6	21	90	–	–	60	57	180	211	217	261	210	-1.0	10.3	12	30	45	–	90	82	60
1803	6.8	21	90	–	–	60	58	183	211	216	259	210	-1.0	10.3	12	30	45	–	90	82	60
1900	5.2	21	91	–	–	60	61	187	211	216	261	210	-.72	10.1	12	30	45	–	90	82	60
2003	5.9	21	90	–	–	60	61	182	211	216	257	210	-1.0	10.1	12	30	45	–	90	82	60
2104	6.0	21	89	–	–	60	64	181	211	215	257	210	-0.7	10.1	12	30	45	–	90	82	60
2206	6.0	21	87	–	–	60	60	187	211	215	257	210	-0.6	10.1	12	30	45	–	90	82	60
2300	6.3	21	89	–	–	60	60	178	211	217	262	210	-0.4	10.1	12	30	45	–	90	82	60

Harrisonburg-Rockingham Regional Sewer Authority
K-S Biosolids drying System 00571

Date: 12-9-19

Operators: 12-8 BSS / 8-4 JC MS / 4-12 TAS

Operators Log Sheet

Time	DRYER FEED HOPPER H-1					DRYER - DRY-01									Discharge and Cooling Conveyors						
	Silo level	Feed Pump PCP-1		Feed Pump PCP-2		Motor		Dry Bed Temperatures				Dryer Exhaust		Weir Level	RV-1	CV-1	CV-2	CV-3	Water	Product	RV-2
	LT-2111	Speed 0-100%	Pressure PIT-2108	Speed 0-100%	Pressure PIT-2105	Speed &	Amps	Bed 1 TE-3002	Bed 2 TE-3005	Bed 3 TE-3006	Bed 4 TE-3007	TT-3001	PIT-3003		Speed 0-100%	Speed 0-100%	Speed 0-100%	Speed 0-100%	Flow FI-4001	Temp TT-4009	Speed 0-100%
	Feet	Hz	PSIG	Hz	PSIG	Hz	Amps	°F	°F	°F	°F	°F	In. WC	In.	Hz	Hz	Hz	%	GPM	°F	Hz
0110	6.4	21	89	–	–	60	61	181	211	218	267	210	-0.5	9.9	12	30	45	–	90	82	60
0203	6.4	21	88	–	–	60	57	179	211	214	266	210	-0.4	9.9	12	30	45	–	90	82	60
0305	6.5	21	89	–	–	60	58	188	211	216	265	210	-0.6	9.9	12	30	45	–	90	82	60
0405	6.5	22	90	–	–	60	57	209	211	233	269	210	-0.6	9.9	12	30	45	–	90	82	60
0513	6.1	22	89	–	–	60	57	190	211	270	288	210	-0.7	9.9	12	30	45	–	90	81	60
0613	6.3	22	88	–	–	60	61	188	211	250	297	210	-0.3	9.9	12	30	45	–	90	81	60
0712	5.8	22	89	–	–	60	59	192	211	258	277	210	-0.9	9.9	12	30	45	–	90	81	60
1022	5.9	22	89	–	–	60	60	181	211	215	268	210	-10.0	10.2	12	30	45	–	90	84	60
1300	5.9	22	91	–	–	60	56	183	211	216	265	210	-10.0	10.2	12	30	45	–	90	83	60
1353	6.0	22	90	–	–	60	62	189	211	215	263	210	-10.0	9.7	12	30	45	–	90	82	60
1636	6.3	22	90	–	–	60	60	191	210	214	259	210	-0.6	9.5	12	30	45	–	90	83	60
1746	6.3	22	90	–	–	60	60	188	211	214	258	210	-.88	9.5	12	30	45	–	90	83	60
1902	6.4	22	90	–	–	60	55	185	210	215	262	210	-1.1	9.5	12	30	45	–	90	82	60
2005	6.2	22	90	–	–	60	57	192	210	216	264	210	-1.0	9.3	12	30	45	–	90	82	60
2110	6.3	22	90	–	–	60	56	192	210	215	260	210	-0.7	9.1	12	30	45	–	90	82	60
2217	6.5	22	90	–	–	60	55	190	210	217	262	210	-1.2	9.1	12	30	45	–	90	82	60
2313	6.2	22	90	–	–	60	55	195	210	217	264	210	-1.0	8.9	12	30	45	–	90	82	60

KOMLINE-SANDERSON ENGINEERING CORPORATION

00571 - Operator Data Sheets - Page 1 - Rev D

F:\Operations Share\Process & Instrument Equipment Manuals\Dryer Bed-Seg\Komline Dryer\Komline Dryer Operator Log Sheets.xlsx

Harrisonburg-Rockingham Regional Sewer Authority
K-S Biosolids drying System 00571

Date: 12-10-19

Operators: 12-8 BSS/JC | 8-4 | 4-12 TAS

Operators Log Sheet

Time	DRYER FEED HOPPER H-1					DRYER - DRY-01									Discharge and Cooling Conveyors						
	Silo level	Feed Pump PCP-1		Feed Pump PCP-2		Motor		Dry Bed Temperatures				Dryer Exhaust		Weir Level	RV-1	CV-1	CV-2	CV-3	Water	Product	RV-2
	LT-2111	Speed 0-100%	Pressure PIT-2106	Speed 0-100%	Pressure PIT-2105	Speed &	Amps	Bed 1 TE-3002	Bed 2 TE-3006	Bed 3 TE-3008	Bed 4 TE-3007	TT-5000	PIT-3003		Speed 0-100%	Speed 0-100%	Speed 0-100%	Speed 0-100%	Flow FI-4001	Temp TT-4009	Speed 0-100%
	Feet	Hz	PSIG	Hz	PSIG	Hz	Amps	°F	°F	°F	°F	°F	In. WC	In.	Hz	Hz	Hz	%	GPM	°F	Hz
0107	5.9	22	88	-	-	60	57	189	210	218	266	210	-0.5	8.9	12	30	45	-	90	81	60
0202	6.0	22	88	-	-	60	55	194	210	218	267	210	-0.9	8.9	12	30	45	-	90	82	60
0306	6.2	22	88	-	-	60	54	177	210	220	267	210	-1.0	8.9	12	30	45	-	90	82	60
0408	6.2	22	88	-	-	60	56	189	210	217	268	210	-0.4	8.9	12	30	45	-	90	82	60
0509	6.0	22	89	-	-	60	54	190	210	218	268	210	-0.5	8.9	12	30	45	-	90	82	60
0606	6.0	22	90	-	-	60	55	190	210	217	268	210	-0.4	8.9	12	30	45	-	90	82	60
0706	6.0	22	89	-	-	60	57	183	210	217	267	210	-0.5	8.9	12	30	45	-	90	82	60
0845	6.0	22	90	-	-	60	55	192	210	218	268	210	-0.5	8.7	12	30	45	-	90	82	60
0945	5.8	22	89	-	-	60	55	193	210	214	249	210	-0.4	8.3	12	30	45	-	90	82	60
1030	6.1	22	89	-	-	60	54	196	211	214	243	210	-0.6	8.7	12	30	45	-	90	83	60
1125	5.9	22	89	-	-	60	54	192	210	214	243	210	-0.5	8.7	12	30	45	-	90	83	60
1255	6.0	22	89	-	-	60	54	189	210	214	244	210	-0.5	8.7	12	30	45	-	90	82	60
1336	6.0	22	87	-	-	60	56	199	210	215	244	210	-0.8	8.7	12	30	45	-	90	81	60
1443	6.1	22	88	-	-	60	56	200	211	214	244	210	-0.7	8.7	12	30	45	-	90	81	60
1530	6.0	22	88	-	-	60	56	197	210	214	244	210	-0.9	8.7	12	30	45	-		81	60
1651	6.1	22	88	-	-	60	59	199	211	213	242	210	-0.8	8.7	12	30	45	-	80	80	60
1800	6.2	22	88	-	-	60	59	193	211	213	241	210	-0.9	8.7	12	30	45	-	90	80	60
1900	6.2	22	88	-	-	60	55	198	211	214	242	210	-0.7	8.7	12	30	45	-	90	80	60
1951	6.3	22	89	-	-	60	59	199	211	214	243	210	-1.0	8.7	12	30	45	-	90	79	60
2111	6.1	22	87	-	-	60	58	201	211	214	244	210	-0.9	8.7	12	30	45	-	90	79	60
2201	6.9	22	89	-	-	60	54	202	211	214	244	210	-0.8	8.7	12	30	45	-	90	78	60
2305	6.2	22	87	-	-	60	56	198	211	214	244	210	-1.7	8.7	12	30	45	-	90	79	60

KOMline-Sanderson Engineering Corporation

00571 - Operator Data Sheets - Page 1 - Rev D

P:\Operations Sand\Process & Instrument Equipment Manuals\Dryer Building\Komline Dryer\Komline Dryer Operator Log Sheets.xlsx

Harrisonburg-Rockingham Regional Sewer Authority
K-S Biosolids drying System 00571

Date: 12-11-19

Operators: 12-8 / 8-4 / 4-12
BSS / JC / TAS

Operators Log Sheet

Time	DRYER FEED HOPPER H-1					DRYER - DRY-01									Discharge and Cooling Conveyors						
	Silo level	Feed Pump PCP-1		Feed Pump PCP-2		Motor		Dry Bed Temperatures				Dryer Exhaust		Weir Level	RV-1	CV-1	CV-2	CV-3	Water	Product	RV-2
	LT-2111	Speed 0-100%	Pressure PIT-2106	Speed 0-100%	Pressure PIT-2105	Speed &	Amps	Bed 1 TE-3002	Bed 2 TE-3005	Bed 3 TE-3006	Bed 4 TE-3007	TT-5000	PIT-5003		Speed 0-100%	Speed 0-100%	Speed 0-100%	Speed 0-100%	Flow FI-4001	Temp TT-4009	Speed 0-100%
	Feet	Hz	PSIG	Hz	PSIG	Hz	Amps	°F	°F	°F	°F	°F	in. WC	in.	Hz	Hz	Hz	%	GPM	°F	Hz
0108	6.2	22	89	–	–	60	57	189	211	214	245	210	-0.6	8.7	12	30	45	–	90	79	60
0202	6.4	22	88	–	–	60	59	199	211	214	244	210	-0.5	8.7	12	30	45	–	90	79	60
0306	6.4	22	89	–	–	60	54	196	211	214	245	210	-0.6	8.7	12	30	45	–	90	79	60
0402	6.4	22	90	–	–	60	57	195	211	214	245	210	-0.5	8.7	12	30	45	–	90	79	60
0505	6.4	22	90	–	–	60	57	185	211	214	244	210	-1.1	8.7	12	30	45	–	90	79	60
0619	6.2	22	91	–	–	60	59	183	211	214	245	210	-2.0	8.7	12	30	45	–	90	79	60
0716	6.2	22	91	–	–	60	54	194	211	214	244	210	-0.7	8.7	12	30	45	–	90	79	60
0846	6.1	22	91	–	–	60	56	192	211	213	244	210	-1.0	8.7	12	30	45	–	90	79	60
0936	6.3	22	91	–	–	60	54	182	211	213	241	210	-0.5	8.7	12	30	45	–	90	79	60
1033	6.2	22	90	–	–	60	56	192	211	213	240	210	-0.5	8.7	12	30	45	–	90	79	60
1143	6.3	22	90	–	–	60	53	192	211	214	240	210	-0.5	8.7	12	30	45	–	90	79	60
1330	6.2	22	91	–	–	60	54	180	211	214	242	210	-0.5	8.7	12	30	45	–	90	79	60
1530	6.4	22	89	–	–	60	54	189	211	214	241	210	-.8	8.7	12	30	45	–	90	79	60
1701	6.4	22	91	–	–	60	57	190	211	214	241	211	-1.0	8.7	12	30	45	–	90	79	60
1805	6.5	22	91	–	–	60	54	198	211	214	242	211	-0.9	8.7	12	30	45	–	90	79	60
1919	6.6	22	90	–	–	60	54	186	211	214	242	211	-0.8	8.7	12	30	45	–	90	80	60
2003	6.4	22	90	–	–	60	56	194	211	214	242	211	-0.7	8.7	12	30	45	–	90	79	60
2105	6.4	22	88	–	–	60	56	193	211	214	243	211	-0.8	8.7	12	30	45	–	90	79	60
2202	6.7	22	88	–	–	60	55	187	211	214	241	211	-0.8	8.7	12	30	45	–	90	78	60
2307	6.5	22	87	–	–	60	57	184	211	214	240	211	-0.8	8.7	12	30	45	–	90	79	60

KOMLINE-SANDERSON ENGINEERING CORPORATION

Harrisonburg-Rockingham Regional Sewer Authority
K+S Biosolids drying System 00571

Date: 12-12-19

Operators: 12-8 / 8-4 / 4-12
1885 / SC MS / [illegible]

Operators Log Sheet

Time	DRYER FEED HOPPER H-1					DRYER - DRY-01									Discharge and Cooling Conveyors						
	Silo level	Feed Pump PCP-1		Feed Pump PCP-2		Motor		Dry Bed Temperatures				Dryer Exhaust		Weir Level	RV-1	CV-1	CV-2	CV-3	Water	Product	RV-2
	LT-2111	Speed 0-100%	Pressure PIT-2108	Speed 0-100%	Pressure PIT-2105	Speed &	Amps	Bed 1 TE-3002	Bed 2 TE-3005	Bed 3 TE-3006	Bed 4 TE-3007	TT-5000	PIT-3003		Speed 0-100%	Speed 0-100%	Speed 0-100%	Speed 0-100%	Flow FI-4001	Temp TT-4009	Speed 0-100%
	Feet	Hz	PSIG	Hz	PSIG	Hz	Amps	°F	°F	°F	°F	°F	In. WC	In.	Hz	Hz	Hz	%	GPM	°F	Hz
0033	6.9	22	89	–	–	60	54	193	211	214	242	211	-1.1	8.7	12	30	45	–	90	79	60
0201	6.5	22	89	–	–	60	58	184	211	214	242	211	-0.6	8.7	12	30	45	–	90	80	60
0304	6.5	22	88	–	–	60	54	189	212	214	293	211	-0.5	8.7	12	30	45	–	90	80	60
0401	6.4	22	88	–	–	60	55	193	212	214	240	211	-0.4	8.7	12	30	45	–	90	80	60
0502	6.4	22	88	–	–	60	53	191	212	214	243	211	-0.6	8.9	12	30	45	–	90	80	60
0602	6.2	22	87	–	–	60	56	179	212	214	244	211	-0.9	8.9	12	30	45	–	90	79	60
0705	6.3	22	88	–	–	60	52	195	212	214	239	211	-1.0	8.9	12	30	45	–	90	79	60
0803	6.3	22	88	–	–	60	54	191	212	214	243	211	-0.6	8.9	12	30	45	–	90	78	60
0940	6.2	22	88	–	–	60	55	195	212	214	242	211	-0.5	8.9	12	30	45	–	90	78	60
1043	5.8	22	88	–	–	60	57	194	212	214	241	211	-0.6	8.9	12	30	45	–	90	78	60
1130	6.1	22	88	–	–	60	57	190	212	214	240	211	-1.1	8.9	12	30	45	–	90	79	60
1250	6.1	22	89	–	–	60	58	193	212	214	241	211	-1.0	8.9	12	30	45	–		80	60
1400	6.1	22	90	–	–	60	55	191	211	213	239	211	-1.0	8.9	12	30	45	–	90	79	60
1503	6.0	22	90	–	–	60	59	189	211	213	241	211	-0.9	9.0	12	30	45	–	90	79	60
1600	5.9	22	88	–	–	60	56	189	211	213	241	211	-1.0	9.0	12	30	45	–	90	79	60
2000	6.0	22	89	–	–	60	57	191	211	213	241	211	-1.0	9.0	12	30	45	–	90	79	60
2140	6.0	22	88	–	–	60	54	191	211	213	241	211	-0.8	9.0	12	30	45	–	90	79	60
2159	6.0	22	88	–	–	60	54	188	211	213	239	211	-0.8	9.0	12	30	45	–	90	79	60
2300	6.0	22	89	–	–	60	58	179	211	213	240	211	-0.9	9.2	12	30	45	–	90	79	60

KOMline-Sanderson Engineering Corporation

00871 - Operator Data Sheets - Page 1 - Rev D

Harrisonburg-Rockingham Regional Sewer Authority
K•S Biosolids drying System 00571

Date: 12-13-19

Operators: 12-8 | 8-4 | 4-12
BSS | BB/JC

Operators Log Sheet

Time	DRYER FEED HOPPER H-1					DRYER - DRY-01									DischargeandCoolingConveyore						
	Silo level	Feed Pump PCP-1		Feed Pump PCP-2		Motor		Dry Bed Temperatures				Dryer Exhaust		Weir Level	RV-1	CV-1	CV-2	CV-3	Water	Product	RV-2
	LT-2111	Speed 0-100%	Pressure PIT-2106	Speed 0-100%	Pressure PIT-2105	Speed &	Amps	~~Bed V~~ 1 TE-3002	BW2 TE-3006	Bed 3 TE-3006	Bed 4 TE-3007	TE-3010	PIT-3008		~~Speed~~ 0-100%	~~Speed~~ 0-100%	~~Speed~~ 0-100%	~~Speed~~ 0-100%	Flow RI-4001	Temp TT-4009	Speed 0-100%
	Feet	Hz	PSIG	Hz	PSIG	Hz	Amps	°F	°F	°F	°F	°F	in. WC	in.	Hz	Hz	Hz	%	GPM	°F	Hz
0108	6.0	22	88	—	—	60	57	212	211	213	211	211	1.41	9.2	12	30	45	—	90	72	60
0210	6.6	22	91	—	—	60	55	211	211	210	210	211	1.41	8.2	12	30	45	—	90	79	60
0308	6.4	22	89	—	—	60	52	184	211	210	210	211	1.10	9.2	12	30	45	—	90	79	60
0400	6.5	22	89	—	—	60	52	187	211	211	210	210	-0.9	5.2	12	30	45	—	90	79	60
0509	6.4	22	87	—	—	60	55	188	211	210	211	211	1.2	9.2	12	30	45	—	90	78	60
0626	6.4	22	88	—	—	60	54	190	211	210	211	211	1.1	5.2	12	30	45	—	90	79	60
0717	6.5	22	88	—	—	60	57	195	211	214	211	211	1.0.6	9.2	12	30	45	—	90	80	60
0920	6.4	22	88	—	—	60	57	193	211	211	211	211	-.6	9.2	12	30	45	—	90	81	60
1000	6.4	22	87	—	—	60	56	192	211	211	211	210	-0.60	9.3	12	30	45	—	90	81	60
1053	6.2	22	87	—	—	60	59	192	211	211	211	210	-0.50	9.5	12	30	45	—		80	80
1423	6.4	22	87	—	—	60	55	195	211	211	211	210	760	9.2	12	30	45	—	90	80	60
1534	6.5	22	88	—	—	60	56	190	211	211	211	211	1.7	9.5	12	30	45	—	90	80	60
1635	6.5	22	89	—	—	60	55	181	211	213	211	210	-0.9	9.3	12	30	45	—	90	79	60
1801	6.7	22	89	—	—	60	56	193	211	211	211	210	-1.6	9.3	12	30	45	—	90	79	60
1859	6.3	22	87	—	—	60	59	183	211	210	211	210	-0.7	9.3	12	30	45	—	90	79	60
1954	6.3	22	87	—	—	60	57	197	211	211	212	210	1.9	9.1	12	30	45	—	90	80	60
2103	6.4	22	86	—	—	60	56	190	211	211	211	211	1.1	9.5	12	30	45	—	90	79	60
2210	6.2	22	87	—	—	60	56	179	210	212	211	210	-0.5	9.5	12	30	45	—	90	79	60
2306	6.3	22	88	—	—	60	54	187	210	212	211	210	-0.5	9.5	12	30	45	—	90	79	60

91+

KOMline-Sanderson Engineering Corporation

00571 - Operator Data Sheets - Page 1 - Rev D

P:\OperSoft SharePoint & Instrument Equipment Manuals\Dryer Building\Kusiflow Dryer\Kusiflow Dryer Operator Log Sheets.xlsx

Harrisonburg-Rockingham Regional Sewer Authority
K-S Biosolids drying System 00571

Date: 12-14-19 Operators: M-N | M-M

Operators Log Sheet

Time	DRYER FEED HOPPER H-1					DRYER - DRY-01									Discharge and Cooling Conveyors						
	Silo level	Feed Pump PCP-1		Feed Pump PCP-2		Motor		Dry Bed Temperatures				Dryer Exhaust		Weir Level	RV-1	CV-1	CV-2	CV-3	Water	Product	RV-2
	LT-2111	Speed 0-100%	Pressure PIT-2106	Speed 0-100%	Pressure PIT-2106	Speed &	Amps	Bed 1 TE-3002	Bed 2 TE-3005	Bed 3 TE-3006	Bed 4 TE-3007	TT-5000	PIT-3003		Speed 0-100%	Speed 0-100%	Speed 0-100%	Speed 0-100%	Flow FI-3001	Temp TT-4008	Speed 0-100%
	Feet	Hz	PSIG	Hz	PSIG	Hz	Amps	°F	°F	°F	°F	°F	in. WC	in.	Hz	Hz	Hz	%	GPM	°F	Hz
0105	6.1	22	87	—	—	60	57	188	211	212	244	209	-0.7	9.5	12	30	45	—	90	79	60
0240	6.2	22	87	—	—	60	55	176	210	212	243	209	-0.7	9.5	12	30	45	—	90	79	60
0320	6.3	22	88	—	—	60	55	184	210	213	243	209	-0.7	9.6	12	30	45	—	90	79	60
0440	6.2	22	87	—	—	60	59	178	210	212	241	209	-1.1	9.6	12	30	45	—	90	79	60
0517	6.2	22	87	—	—	60	58	184	210	213	241	209	-1.0	9.8	12	30	45	—	90	79	60
0640	6.2	22	86	—	—	60	60	177	210	213	244	209	-1.3	10.0	12	30	45	—	90	79	60
0720	6.1	22	86	—	—	60	55	181	210	213	244	209	-1.1	10.0	12	30	45	—	90	79	60
0836	6.2	22	87	—	—	60	59	182	210	212	243	209	-1.0	10.0	12	30	45	—	90	79	60
0919	6.2	22	86	—	—	60	58	189	210	212	241	209	-2.2	10.0	12	30	45	—	90	79	60
1035	6.0	22	88	—	—	60	56	178	210	212	241	209	-1.0	10.2	12	30	45	—	90	79	60
1120	6.1	22	87	—	—	60	60	181	210	212	242	209	-0.8	10.3	12	30	45	—	90	79	60
1301	6.0	22	86	—	—	60	56	175	211	213	242	209	-0.7	10.4	12	30	45	—	90	79	60
1406	5.7	22	87	—	—	60	61	180	210	213	244	209	-0.6	10.6	12	30	45	—	90	79	60
1513	4.8	22	86	—	—	60	58	178	210	213	245	209	-1.2	10.6	12	30	45	—	90	78	60
1615	4.9	20	86	—	—	60	59	181	210	213	247	209	-0.9	10.6	12	30	45	—	90	78	60
1709	5.0	20	86	—	—	60	58	178	210	213	241	209	-1.1	10.4	12	30	45	—	90	79	60
1808	5.2	20	86	—	—	60	61	183	210	213	239	209	-0.9	10.7	12	30	45	—	90	79	60
1909	5.1	22	88	—	—	60	62	176	210	214	241	209	-0.9	10.9	12	30	45	—	90	79	60
2005	5.3	22	89	—	—	60	60	177	210	215	247	209	-0.6	10.9	12	30	45	—	90	79	60
2110	5.2	22	89	—	—	60	57	170	210	214	248	209	-0.6	10.8	12	30	45	—	90	78	60
2219	5.4	22	88	—	—	60	59	179	210	214	244	209	-0.6	10.8	12	30	45	—	90	79	60
2305	5.3	22	86	—	—	60	57	168	210	214	241	209	-0.7	10.8	12	30	45	—	90	79	60

KOMline-Sanderson Engineering Corporation

Harrisonburg-Rockingham Regional Sewer Authority
K+S Biosolids drying System 00571

Date: 12-15-19 Operators: M-N / N-M BM / ERM

Operators Log Sheet

Time	DRYER FEED HOPPER H-1					DRYER - DRY-01									Discharge and Cooling Conveyors						
	Silo level	Feed Pump PCP-1		Feed Pump PCP-2		Motor		Dry Bed Temperatures				Dryer Exhaust		Weir Level	RV-1	CV-1	CV-2	CV-3	Water	Product	RV-2
	LT-2111	Speed 0-100%	Pressure PIT-2106	Speed 0-100%	Pressure PIT-2105	Speed &	Amps	Bed 1 TE-3002	Bed 2 TE-3005	Bed 3 TE-3006	Bed 4 TE-3007	TT-5000	PIT-3003		Speed 0-100%	Speed 0-100%	Speed 0-100%	Speed 0-100%	Flow FI-4061	Temp TT-4009	Speed 0-100%
	Feet	Hz	PSIG	Hz	PSIG	Hz	Amps	°F	°F	°F	°F	°F	In. WC	In.	Hz	Hz	Hz	%	GPM	°F	Hz
0044	5.5	22	87	—	—	60	59	174	210	215	246	209	-0.8	11.2	12	30	45	—	90	79	60
0118	5.5	22	86	—	—	60	59	175	210	215	248	209	-0.7	11.1	12	30	45	—	90	79	60
0224	5.5	22	86	—	—	60	64	182	210	214	243	209	-0.8	11.1	12	30	45	—	90	79	60
0321	5.4	22	86	—	—	60	61	177	210	214	240	209	-0.7	11.1	12	30	45	—	90	79	60
0440	5.7	22	87	—	—	60	57	181	210	215	240	209	-0.8	11.1	12	30	45	—	90	79	60
0517	5.5	22	86	—	—	60	59	175	210	215	241	209	-0.8	11.3	12	30	45	—	90	79	60
0634	5.7	22	86	—	—	60	57	177	210	215	243	210	-1.2	11.4	12	30	45	—	90	79	60
0720	5.7	22	86	—	—	60	63	189	211	216	244	210	-0.9	11.4	12	30	45	—	90	79	60
0846	5.7	22	85	—	—	60	62	188	211	215	243	210	-0.8	11.4	12	30	45	—	90	79	60
0935	5.7	22	86	—	—	60	62	178	211	215	241	210	-1.1	11.4	12	30	45	—	90	79	60
1029	5.7	22	86	—	—	60	61	183	211	216	242	210	-0.8	11.6	12	30	45	—	90	79	60
1120	5.8	22	86	—	—	60	58	170	211	216	242	210	-1.3	11.6	12	30	45	—	90	78	60
1304	6.1	22	87	—	—	60	61	199	211	216	241	210	-1.1	11.6	12	30	45	—	90	78	60
1402	6.1	22	87	—	—	60	59	172	211	219	254	210	-1.9	11.5	12	30	45	—	90	78	60
1507	6.3	22	87	—	—	60	62	175	211	229	268	210	-0.9	11.2	12	30	45	—	90	78	60
1605	6.2	22	88	—	—	60	61	179	211	225	270	210	-0.7	10.8	12	30	45	—	90	77	60
1709	6.3	22	87	—	—	60	57	174	211	216	252	210	-0.7	10.7	12	30	45	—	90	80	60
1813	6.3	22	86	—	—	59	62	173	211	215	248	210	-0.8	11.0	12	50	45	—	90	79	60
1908	6.2	22	86	—	—	60	62	170	211	217	248	210	-0.8	11.3	12	38	45	—	90	80	60
2007	6.2	22	87	—	—	60	63	177	211	217	250	210	-1.1	11.2	12	30	45	—	90	80	60
2105	6.2	22	85	—	—	60	58	176	211	216	248	210	-0.8	11.2	12	30	45	—	90	79	60
2208	6.2	22	84	—	—	60	62	178	211	215	243	210	-0.7	11.2	12	30	45	—	90	78	60
2305	6.3	22	84	—	—	60	62	179	211	215	242	210	-0.8	11.3	12	30	45	—	90	80	60

Harrisonburg-Rockingham Regional Sewer Authority
K-S Biosolids drying System 00571

Date: 12-16-19

Operators: 12-8 BM | 8-4 MS | 4-12 EPM

Operators Log Sheet

Time	DRYER FEED HOPPER H-1					DRYER - DRY-01									Discharge and Cooling Conveyors						
	Silo level	Feed Pump PCP-1		Feed Pump PCP-2		Motor		Dry Bed Temperatures				Dryer Exhaust		Weir Level	RV-1	CV-1	CV-2	CV-3	Water	Product	RV-2
	LT-2111	Speed 0-100%	Pressure PIT-2106	Speed 0-100%	Pressure PIT-2105	Speed &	Amps	Bed 1 TE-3002	Bed 2 TE-3006	Bed 3 TE-3008	Bed 4 TE-3007	TT-6000	PIT-3003		Speed 0-100%	Speed 0-100%	Speed 0-100%	Speed 0-100%	Flow FI-4001	Temp TT-4009	Speed 0-100%
	Feet	Hz	PSIG	Hz	PSIG	Hz	Amps	°F	°F	°F	°F	°F	In. WC	In.	Hz	Hz	Hz	%	GPM	°F	Hz
0030	6.3	22	86	—	—	60	60	175	211	216	246	210	-0.9	11.5	12	30	45	—	90	79	60
0128	6.2	22	86	—	—	60	57	182	211	217	246	210	-0.8	11.5	12	30	45	—	90	79	60
0290	6.1	22	86	-	-	60	59	174	211	216	244	210	-0.9	11.5	12	30	45	—	90	79	60
0330	6.0	22	86	—	—	60	58	175	211	216	243	210	-0.8	11.5	12	30	45	—	90	79	60
0430	6.2	22	85	—	—	60	59	184	211	216	242	210	-0.8	11.5	12	30	45	—	90	79	60
0527	6.1	22	86	—	-	60	60	184	211	216	242	210	-1.0	11.5	12	30	45	—	90	79	60
0640	6.0	22	86	-	-	60	59	172	211	217	246	210	-0.9	11.4	12	30	45	—	90	79	60
0715	6.0	22	85	—	—	60	58	180	211	217	245	210	-1.0	11.4	12	30	45	—	90	79	60
1100	6.0	22	87	—	—	60	63	185	211	218	250	210	-1.3	11.2	12	30	45	—	90	79	60
1300	6.4	22	87	—	—	60	55	178	211	272	281	210	-1.3	10.8	12	30	45	—	90	79	60
														10.4							
1653	6.4	22	87	—	—	60	59	183	211	258	298	210	-0.8	9.8	12	30	45	—	90	81	60
1717	6.6	22	86	—	—	60	59	174	211	245	293	210	-0.7	9.8	12	30	45	—	90	82	60
1815	6.4	22	86	—	—	59	62	188	211	220	278	210	-0.8	9.8	12	30	45	—	90	83	60
1907	6.4	22	86	—	—	60	57	193	211	216	266	210	-0.8	9.8	12	30	45	—	90	83	60
2013	6.5	23	87	-	-	60	59	187	211	217	264	210	-0.7	9.8	12	30	45	—	90	83	60
2107	6.4	23	87	-	-	60	57	192	211	214	259	210	-0.8	9.6	12	30	45	—	90	81	60
2214	6.3	23	87	—	—	59	60	194	211	213	244	210	-1.3	9.6	12	30	45	—	90	82	60
2304	6.3	23	87	—	—	60	57	184	211	214	244	210	-1.0	10.5	12	30	45	—	90	82	60

Harrisonburg-Rockingham Regional Sewer Authority
K-S Biosolids drying System 00571

Date: 12-17-19

Operators:	12-8	8-4	4-12
	BM	MS/JC	EBM

Operators Log Sheet

Time	DRYER FEED HOPPER H-1					DRYER - DRY-01									Discharge and Cooling Conveyors						
	Silo level	Feed Pump PCP-1		Feed Pump PCP-2		Motor		Dry Bed Temperatures				Dryer Exhaust		Weir Level	RV-1	CV-1	CV-2	CV-3	Water	Product	RV-2
	LT-2111	Speed 0-100%	Pressure PIT-2106	Speed 0-100%	Pressure PIT-2106	Speed &	Amps	Bed 1 TE-3002	Bed 2 TE-3005	Bed 3 TE-3006	Bed 4 TE-3007	TT-6000	PIT-3003		Speed 0-100%	Speed 0-100%	Speed 0-100%	Speed 0-100%	Flow FI-4001	Temp TT-4009	Speed 0-100%
	Feet	Hz	PSIG	Hz	PSIG	Hz	Amps	°F	°F	°F	°F	°F	in. WC	in.	Hz	Hz	Hz	%	GPM	°F	Hz
0000	6.1	23	88	—	—	60	59	183	211	214	248	210	-1.1	10.5"	12	30	45	—	90	80	60
0124	6.1	23	88	—	—	60	58	184	211	215	254	210	-1.1	10.5"	12	30	45	—	90	80	60
0236	6.0	23	88	—	—	60	59	176	211	216	258	210	-1.1	10.5"	12	30	45	—	90	79	60
0322	6.1	23	88	—	—	60	56	189	210	213	251	210	-1.2	10.1"	12	30	45	—	90	79	60
0440	5.8	23	88	—	—	60	58	183	210	212	236	210	-0.9	10.1"	12	30	45	—	90	81	60
0530	5.7	23	88	—	—	60	55	185	210	212	236	210	-1.0	10.3"	12	30	45	—	90	81	60
0644	5.6	23	88	—	—	60	60	176	210	213	237	210	-1.1	11.0"	12	30	45	—	90	80	60
0721	5.6	23	88	—	—	60	60	176	210	214	239	210	-0.7	10.9	12	30	45	—	90	79	60
0835	5.6	23	88	—	—	60	57	182	210	215	248	210	-0.6	10.9	12	30	45	—	90	79	60
0938	5.5	23	87	—	—	60	58	182	210	214	250	209	-0.6	10.5	12	30	45	—	90	79	60
1030	5.1	23	88	—	—	60	61	182	210	213	243	209	-0.8	10.5	12	30	45	—	90	80	60
1130	5.4	23	87	—	—	60	58	175	210	213	238	209	-0.8	10.8	12	30	45	—	90	81	60
1255	5.3	23	87	—	—	60	57	170	210	213	238	209	-0.9	10.8	12	30	45	—	90	79	60
1330	5.3	23	87	—	—	60	59	176	210	213	239	209	-1.1	10.9	12	30	45	—	90	79	60
1436	5.2	23	86	—	—	60	56	172	210	214	245	209	-1.1	11.0	12	30	45	—	90	78	60
1536	5.3	23	85	—	—	60	60	181	210	216	251	209	-2.40	11.0	12	30	45	—	90	78	60
1649	5.1	23	85	—	—	60	60	184	210	214	247	209	-0.1	10.8	12	30	45	—	90	79	60
1735	4.8	23	85	—	—	60	61	181	210	213	242	209	-1.0	10.8	12	30	45	—	90	79	60
1821	5.0	23	84	—	—	60	62	179	210	214	241	210	-1.1	10.9	12	30	45	—	90	80	60
1908	4.7	23	87	—	—	60	63	171	210	214	243	210	-1.3	11.2	12	30	45	—	90	79	60
2010	4.7	22	87	—	—	59	62	178	210	215	248	210	-0.9	11.2	12	30	45	—	90	79	60
2105	4.6	22	88	—	—	60	56	179	210	217	256	210	-0.9	11.0	12	30	45	—	90	78	60
2208	4.6	22	89	—	—	60	56	177	211	218	263	210	-0.9	10.8	12	30	45	—	90	78	60
2307	4.6	22	89	—	—	59	62	184	211	215	261	210	-0.6	10.6	12	30	45	—	90	79	60

KOELLE-SANCERSON ENGINEERING CORPORATION

Harrisonburg-Rockingham Regional Sewer Authority
K-S Biosolids drying System 00571

Date: 12-18-19 Operators: 12-8 BM | 8-4 MS | 4-12 EKM

Operators Log Sheet

Time	DRYER FEED HOPPER H-1					DRYER - DRY-01									Discharge and Cooling Conveyors						
	Silo level	Feed Pump PCP-1		Feed Pump PCP-2		Motor		Dry Bed Temperatures				Dryer Exhaust		Weir Level	RV-1	CV-1	CV-2	CV-3	Water	Product	RV-2
	LT-2111	Speed 0-100%	Pressure PIT-2106	Speed 0-100%	Pressure PIT-2105	Speed &	Amps	Bed 1 TE-3002	Bed 2 TE-3005	Bed 3 TE-3006	Bed 4 TE-3007	TT-5000	PIT-3003		Speed 0-100%	Speed 0-100%	Speed 0-100%	Speed 0-100%	Flow FI-4001	Temp TT-4009	Speed 0-100%
	Feet	Hz	PSIG	Hz	PSIG	Hz	Amps	°F	°F	°F	°F	°F	in. WC	in.	Hz	Hz	Hz	%	GPM	°F	Hz
0048	4.5	22	89	—	—	60	60	181	211	216	260	210	-1.3	10.5"	12	30	45	—	90	79	60
0130	4.6	22	90	—	—	60	60	184	211	215	258	210	-0.6	10.5"	12	30	45	—	90	79	60
0246	4.5	22	91	—	—	60	60	177	211	216	255	210	-0.6	10.4"	12	30	45	—	90	80	60
0332	4.5	22	91	—	—	60	58	177	211	216	256	210	-0.6	10.4"	12	30	45	—	90	80	60
0434	4.5	22	91	—	—	60	59	176	211	215	256	210	-0.9	10.4"	12	30	45	—	90	80	60
0520	4.1	22	93	—	—	60	60	178	211	215	256	210	-0.8	10.3"	12	30	45	—	90	80	60
0640	4.0	22	104	—	—	60	62	171	211	216	260	210	-0.9	10.3"	12	30	45	—	90	80	60
0730	4.1	21	84	—	—	60	61	183	210	219	264	210	-0.9	10.1	12	30	45	—	90	80	60
1048	4.0	21	73	21	73	60	66	179	211	216	261	210	-1.30	10.1	12	30	45	—	90	79	60
1233	4.1	21	75	21	75	60	64	179	211	214	249	210	-1.1	10.1	12	30	45	—	90	78	60
1355	4.3	—	—	21	80	60	63	181	211	214	238	210	-0.9	10.4	12	30	45	—	90	77	60
1521	4.2	—	—	21	81	60	60	180	211	214	238	210	-0.7	10.7	12	30	45	—	90	77	60
1630	4.2	—	—	21	81	60	57	185	211	216	241	210	-0.7	10.9	12	30	45	—	90	76	60
1742	4.2	—	—	21	82	60	63	179	211	217	247	210	-0.7	10.9	12	30	45	—	90	76	60
1812	4.2	—	—	21	82	60	65	180	211	219	250	210	-0.6	10.9	12	30	45	—	90	76	60
1911	4.1	—	—	21	84	60	58	181	211	217	252	210	-0.8	10.7	12	30	45	—	90	76	60
2015	4.1	—	—	21	85	59	59	177	211	218	252	210	-0.7	10.7	12	30	45	—	90	77	60
2107	4.0	—	—	21	85	60	62	181	211	217	253	210	-0.7	10.7	12	30	45	—	90	76	60
2232	3.9	—	—	20	86	59	66	182	211	218	253	210	-0.8	10.7	12	30	45	—	90	78	60
2304	4.1	—	—	20	85	59	65	185	211	217	252	210	-0.7	10.7	12	30	45	—	90	78	60

Harrisonburg-Rockingham Regional Sewer Authority
K•S Biosolids drying System 00571

Date: 12-19-19 Operators: 12-8 BM | 8-4 JC | 4-12 EPM

Operators Log Sheet

Time	DRYER FEED HOPPER: H-1					DRYER - DRY-01									Discharge and Cooling Conveyors						
	Silo level	Feed Pump PCP-1		Feed Pump PCP-2		Motor		Dry Bed Temperatures				Dryer Exhaust		Weir Level	RV-1	CV-1	CV-2	CV-3	Water	Product	RV-2
	LT-2111	Speed 0-100%	Pressure PIT-2106	Speed 0-100%	Pressure PIT-2105	Speed &	Amps	Bed 1 TE-3002	Bed 2 TE-3006	Bed 3 TE-3006	Bed 4 TE-3007	TT-5000	PIT-3003		Speed 0-100%	Speed 0-100%	Speed 0-100%	Speed 0-100%	Flow FI-4001	Temp TT-4009	Speed 0-100%
	Feet	Hz	PSIG	Hz	PSIG	Hz	Amps	°F	°F	°F	°F	°F	in. WC	in.	Hz	Hz	Hz	%	GPM	°F	Hz
0036	3.9	—	—	20	85	60	60	176	211	219	257	210	-1.0	10.7	12	30	45	—	90	78	60
0139	3.8	—	—	20	73	60	58	182	211	222	261	210	-1.0	10.5	12	30	45	—	90	78	60
0238	3.9	—	—	20	70	60	62	183	211	225	266	210	-1.2	10.3	12	30	45	—	90	77	60
0317	3.8	—	—	20	70	60	65	181	211	224	264	210	-1.2	10.3	12	30	45	—	90	77	60
0436	4.0	—	—	20	70	60	59	181	211	219	259	210	-1.0	10.3	12	30	45	—	90	77	60
0520	4.0	—	—	20	70	60	61	177	211	218	254	210	-1.0	10.3	12	30	45	—	90	78	60
0645	4.1	—	—	20	68	60	63	182	212	216	243	210	-1.2	10.5	12	30	45	—	90	78	60
0715	4.0	—	—	20	67	60	60	178	212	217	242	210	-1.0	10.7	12	30	45	—	90	79	60
0830	4.4	—	—	20	67	60	65	181	212	217	241	210	-1.1	10.8	12	30	45	—	90	78	60
0933	4.1	—	—	20	67	60	60	180	212	217	242	211	-1.0	10.7	12	30	45	—	90	77	60
1024	4.4	—	—	21	67	60	63	176	212	217	242	211	-1.0	10.5	12	30	45	—	90	78	60
1141	4.3	—	—	21	65	60	60	177	212	217	240	210	-1.1	10.5	12	30	45	—	90	77	60
1257	4.2	—	—	21	67	60	62	168	212	216	236	210	-1.2	10.5	12	30	45	—	90	77	60
1343	4.3	—	—	21	67	60	60	180	211	216	238	210	-0.9	10.5	12	30	45	—	90	77	60
1436	4.3	—	—	21	67	60	60	176	211	216	241	210	-1.1	10.3	12	30	45	—	90	78	60
1548	4.3	—	—	21	67	60	60	178	212	218	247	210	-0.6	10.0	12	30	45	—	90	78	60
1648	4.1	—	—	21	66	59	61	181	212	217	251	210	-0.7	10.0	12	30	45	—	90	79	60
1802	4.2	—	—	21	67	60	61	181	212	218	256	210	-0.7	10.0	12	30	45	—	90	79	60
1915	4.4	—	—	21	65	60	57	180	211	216	250	211	-0.7	9.8	12	30	45	—	90	80	60
2006	4.2	—	—	21	66	60	59	182	212	215	247	211	-0.7	9.8	12	30	45	—	90	81	60
2107	4.3	—	—	21	67	60	59	183	212	216	247	211	-0.7	9.8	12	30	45	—	90	81	60
2220	4.5	—	—	21	66	60	60	186	212	216	249	210	-0.7	9.8	12	30	45	—	90	80	60
2305	4.6	—	—	21	66	60	59	174	211	216	252	210	-0.6	9.8	12	30	45	—	90	80	60

KOHLINE-SANDERSON ENGINEERING CORPORATION

00571 - Operator Data Sheets - Page 1 - Rev D

P:\Operations Start\Process & Instrument Equipment Manuals\Dryer Building\Kone\Kone Dryer\Exercise Dryer Operator Log Sheets.xlsx

Harrisonburg-Rockingham Regional Sewer Authority
K-S Biosolids drying System 00571

Date: 12-20-19

Operators: 12-8 / 8-4 / 4-12
JC / Edwin

Operators Log Sheet

Time	DRYER FEED HOPPER H-1					DRYER - DRY-01									Discharge and Cooling Conveyors						
	Silo level	Feed Pump PCP-1		Feed Pump PCP-2		Motor		Dry Bed Temperatures				Dryer Exhaust		Weir Level	RV-1	CV-1	CV-2	CV-3	Water	Product	RV-2
	LT-2111	Speed 0-100%	Pressure PIT-2106	Speed 0-100%	Pressure PIT-2105	Speed &	Amps	Bed 1 TE-3002	Bed 2 TE-3005	Bed 3 TE-3006	Bed 4 TE-3007	TT-6000	PIT-3003		Speed 0-100%	Speed 0-100%	Speed 0-100%	Speed 0-100%	Flow FI-4001	Temp TT-4009	Speed 0-100%
	Feet	Hz	PSIG	Hz	PSIG	Hz	Amps	°F	°F	°F	°F	°F	in. WC	in.	Hz	Hz	Hz	%	GPM	°F	Hz
0051	4.5	—	—	21	66	60	58	180	211	216	256	211	-0.7	9.8	12	30	45	—	90	79	60
0125	4.6	—	—	21	66	60	56	183	211	215	253	211	-0.8	9.6	12	30	45	—	90	79	60
0223	4.6	—	—	21	65	60	60	178	212	215	251	211	-0.7	9.6	12	30	45	—	90	79	60
0321	4.5	—	—	21	65	60	57	174	212	215	252	211	-0.7	9.6	12	30	45	—	90	79	60
0431	4.6	—	—	21	66	60	59	172	212	216	254	211	-0.9	9.6	12	30	45	—	90	79	60
0523	4.7	—	—	21	66	60	56	174	212	217	254	211	-0.9	9.4	12	30	45	—	90	78	60
0650	4.7	—	—	21	65	60	60	185	212	215	252	211	-0.9	9.2	12	30	45	—	90	78	60
0715	4.7	—	—	21	66	60	55	180	212	215	250	211	-1.0	9.0	12	30	45	—	90	77	60
0902	4.8	—	—	21	66	60	54	173	212	215	249	212	-1.0	9.0	12	30	45	—	90	77	60
0942	4.9	—	—	21	65	60	56	182	212	216	250	211	-1.2	9.0	12	30	45	—	90	77	60
1123	5.1	—	—	21	65	60	55	183	212	219	247	211	-0.8	8.8	12	30	45	—	90	78	60
1254	5.3	—	—	21	65	60	55	178	212	218	245	211	-0.9	8.8	12	30	45	—	90	79	60
1333	5.1	—	—	21	65	60	54	167	211	218	245	211	-0.9	8.8	12	30	45	—	90	79	60
1448	5.1	—	—	21	66	60	54	174	212	217	243	211	-1.0	8.8	12	30	45	—	90	80	60
1540	5.2	—	—	21	66	60	53	164	212	217	243	211	-0.6	8.8	12	30	45	—	90	80	60
1655	5.2	—	—	21	65	60	58	159	212	220	247	211	-0.8	8.9	12	30	45	—	90	80	60
1736	5.5	—	—	21	65	60	53	161	212	219	250	211	-0.8	8.9	12	30	45	—	90	80	60
1833	5.2	—	—	21	65	60	53	162	212	221	252	211	-0.7	8.9	12	30	45	—	90	79	60
194	5.1	—	—	21	65	60	55	161	212	220	251	211	-0.7	8.8	12	30	45	—	90	79	60
2012	5.4	—	—	21	65	60	55	171	211	219	250	211	-1.0	8.8	12	30	45	—	90	80	60
2113	5.3	—	—	21	65	60	52	173	212	219	249	211	-1.0	8.8	12	30	45	—	90	80	60
2219	5.4	—	—	21	64	60	56	174	212	218	248	211	-0.8	8.8	12	30	45	—	90	80	60
2308	5.4	—	—	21	64	60	53	167	212	218	248	211	-1.2	8.8	12	30	45	—	90	80	60

KOMline-Sanderson Engineering Corporation

D0571 - Operator Data Sheets - Page 1 - Rev D

F:\Operations Shared\Process & Instrument Equipment Manuals\Dryer Building\Komline Dryer\Komline Dryer Operator Log Sheets.xlsx

Harrisonburg-Rockingham Regional Sewer Authority
K-S Biosolids drying System 00571

Date: 12-21-19 Operators: m-N / N-m TAS / BSS

Operators Log Sheet

Time	DRYER FEED HOPPER H-1					DRYER - DRY-01									Discharge and Cooling Conveyors						
	Silo level	Feed Pump PCP-1		Feed Pump PCP-2		Motor		Dry Bed Temperatures				Dryer Exhaust		Weir Level	RV-1	CV-1	CV-2	CV-3	Water	Product	RV-2
	LT-2111	Speed 0-100%	Pressure PIT-2106	Speed 0-100%	Pressure PIT-2106	Speed &	Amps	Bed 1 TE-3002	Bed 2 TE-3006	Bed 3 TE-3006	Bed 4 TE-3007	TT-3000	PIT-3003		Speed 0-100%	Speed 0-100%	Speed 0-100%	Speed 0-100%	Flow FI-4001	Temp TT-4009	Speed 0-100%
	Feet	Hz	PSIG	Hz	PSIG	Hz	Amps	°F	°F	°F	°F	°F	in. WC	in.	Hz	Hz	Hz	%	GPM	°F	Hz
0210	5.4	–	–	21	64	54	60	167	212	219	249	211	-1.3	8.8	12	30	45	–	90	79	60
0305	5.5	–	–	21	64	56	60	161	213	220	251	211	-0.9	8.8	12	30	45	–	90	79	60
300	5.4	–	–	21	65	57	60	170	211	218	251	211	-1.2	8.8	12	30	45	–	90	79	60
403	5.2	–	–	21	65	57	60	168	211	220	252	211	-1.0	8.8	12	30	45	–	90	79	60
506	56	–	–	21	64	55	60	169	211	220	252	211	-1.1	8.8	12	30	45	–	90	79	60
605	5.4	–	–	21	63	52	60	164	211	220	251	211	-0.4	8.8	12	30	45	–	90	78	60
706	5.8	–	–	21	64	56	60	166	211	219	251	211	-0.5	8.8	12	30	45	–	90	78	60
817	56	–	–	21	64	56	60	155	211	220	250	211	-0.6	8.8	12	30	45	–	90	79	60
915	5.8	–	–	21	65	58	60	167	211	219	250	211	-0.7	8.8	12	30	45	–	90	79	60
1023	5.7	–	–	21	64	56	60	173	211	219	250	211	-0.7	8.8	12	30	45	–	90	79	60
1102	60	–	–	21	65	57	60	179	211	219	250	211	-0.6	8.8	12	30	45	–	90	79	60
1305	6.4	–	–	21	65	60	57	204	211	228	263	211	-0.6	8.8	12	30	45	–	90	79	60
1401	6.1	–	–	21	64	60	52	169	211	261	271	211	-0.6	8.8	12	30	45	–	90	79	60
1509	6.2	–	–	21	63	60	55	175	211	271	285	211	-0.6	8.6	12	30	45	–	90	78	60
1602	6.3	–	–	21	63	60	55	170	211	261	284	211	-0.6	8.6	12	30	45	–	90	78	60
1702	6.3	–	–	21	63	60	57	181	211	255	282	211	-1.0	8.7	12	30	45	–	90	79	60
1803	6.5	–	–	21	63	60	56	171	211	237	276	211	-1.0	8.7	12	30	45	–	90	80	60
1907	6.6	–	–	21	63	60	57	184	211	231	270	211	-1.0	8.7	12	30	45	–	90	80	60
2008	6.4	–	–	21	63	60	57	175	211	228	265	211	-1.2	8.7	12	30	45	–	90	80	60
2059	6.5	–	–	21	63	60	55	180	211	226	262	211	-0.9	8.7	12	30	45	–	90	80	60
2210	6.2	–	–	21	63	60	52	160	211	223	258	211	-0.9	8.7	12	30	45	–	90	80	60
2319	6.2	–	–	21	63	60	52	167	211	223	257	211	-1.0	8.7	12	30	45	–	90	80	60

Harrisonburg-Rockingham Regional Sewer Authority
K-S Biosolids drying System 00571

Date: 12-22-19 Operators: M-N / N-M
DJ / BSS

Operators Log Sheet

Time	DRYER FEED HOPPER R-1					DRYER - DRY-01									Discharge and Cooling Conveyors						
	Silo level	Feed Pump PCP-1		Feed Pump PCP-2		Motor		Dry Bed Temperatures				Dryer Exhaust		Weir Level	RV-1	CV-1	CV-2	CV-3	Water	Product	RV-2
	LT-2111	Speed 0-100%	Pressure PIT-2106	Speed 0-100%	Pressure PIT-2105	Speed &	Amps	Bed 1 TE-3002	Bed 2 TE-3006	Bed 3 TE-3008	Bed 4 TE-3007	TT-5000	PIT-3003		Speed 0-100%	Speed 0-100%	Speed 0-100%	Speed 0-100%	Flow FI-4001	Temp TT-4009	Speed 0-100%
	Feet	Hz	PSIG	Hz	PSIG	Hz	Amps	°F	°F	°F	°F	°F	In. WC	In.	Hz	Hz	Hz	%	GPM	°F	Hz
0945	6.2	–	–	21	64	52	60	177	211	224	257	211	-0.9	8.7	12	30	45	–	90	79	60
1030	6.2	–	–	21	64	55	60	161	211	225	257	211	-0.5	8.7	12	30	45	–	90	79	60
1158	6.4	–	–	21	68	56	60	171	211	224	257	211	-1.1	8.7	12	30	45	–	90	79	60
410	6.3	–	–	21	66	54	60	163	211	223	257	211	-1.1	8.7	12	30	45	–	90	78	60
540	6.3	–	–	21	65	54	60	172	211	226	257	211	-1.1	8.7	12	30	45	–	90	78	60
615	6.3	–	–	21	65	55	60	171	211	224	257	211	-0.9	8.7	12	30	45	–	90	78	60
700	6.6	–	–	21	66	54	60	168	211	224	255	211	-1.0	8.5	12	30	45	–	90	77	60
822	6.5	–	–	21	66	55	60	168	211	223	253	211	-1.1	8.5	12	30	45	–	90	78	60
904	6.6	–	–	21	66	52	60	173	211	223	251	211	-0.4	8.6	12	30	45	–	90	79	60
1010	6.4	–	–	21	65	52	60	170	211	224	253	211	-0.6	8.6	12	30	45	–	90	79	60
1100	6.8	–	–	21	65	56	60	166	211	225	253	211	-0.5	8.6	12	30	45	–	90	79	60
1300	6.6	–	–	21	65	60	54	164	211	232	261	211	-0.6	8.6	12	30	45	–	90	79	60
1349	6.5	–	–	21	65	60	57	159	211	234	263	211	-0.6	8.6	12	30	45	–	90	79	60
1506	6.2	–	–	21	64	60	52	170	211	229	263	211	-0.8	8.6	12	30	45	–	90	79	60
1601	6.2	–	–	21	64	60	54	173	211	229	262	211	-0.3	8.6	12	30	45	–	90	79	60
1704	7.4	–	–	21	64	60	51	205	211	257	268	211	-0.7	8.6	12	30	45	–	90	80	60
1756	6.3	–	–	21	64	60	51	174	211	288	290	210	-0.6	7.4	12	30	45	–	90	79	60
1905	6.1	–	–	21	64	60	54	165	211	297	302	210	-0.6	7.4	12	30	45	–	90	78	60
2004	5.8	–	–	21	64	60	51	170	211	293	303	210	-0.6	7.4	12	30	45	–	90	79	60
2105	6.1	–	–	21	64	60	52	177	211	271	294	210	-0.5	7.4	12	30	45	–	90	80	60
2216	6.1	–	–	21	64	60	55	166	211	250	281	210	-0.5	7.4	12	30	45	–	90	81	60
2312	5.9	–	–	21	66	60	56	180	211	237	270	210	-1.1	7.4	12	30	45	–	90	81	60

Harrisonburg-Rockingham Regional Sewer Authority
K•S Biosolids drying System 00571

Date: 12-23-19 Operators: 12-8 TJS | 8-4 MS | 4-12 1555

Operators Log Sheet

Time	DRYER FEED HOPPER H-1					DRYER - DRY-01									Discharge and Cooling Conveyors						
	Bio level	Feed Pump PCP-1		Feed Pump PCP-2		Motor		Dry Bed Temperatures				Dryer Exhaust		Weir Level	RV-1	CV-1	CV-2	CV-3	Water	Product	RV-2
	LT-2111	Speed 0-100%	Pressure PIT-2106	Speed 0-100%	Pressure PIT-2105	Speed &	Amps	Bed 1 TE-3002	Bed 2 TE-3005	Bed 3 TE-3006	Bed 4 TE-3007	TT-5000	PIT-3003		Speed 0-100%	Speed 0-100%	Speed 0-100%	Speed 0-100%	Flow FI-4001	Temp TT-4009	Speed 0-100%
	Feet	Hz	PSIG	Hz	PSIG	Hz	Amps	°F	°F	°F	°F	°F	in. WC	in.	Hz	Hz	Hz	%	GPM	°F	Hz
0047	5.8	–	–	21	67	56	60	177	211	231	261	218	-1.1	7.4	12	30	45	–	90	81	60
0011	5.7	–	–	21	67	52	60	172	211	231	259	210	-1.6	7.4	12	30	45	–	90	80	60
1003	5.7	–	–	21	66	55	60	168	211	232	259	216	-1.0	7.4	12	30	45	–	90	80	60
0451	5.8	–	–	21	65	51	60	164	211	233	260	210	-0.7	7.4	12	30	45	–	90	80	60
501	5.8	–	–	21	66	55	60	165	211	231	258	210	-0.8	7.2	12	30	45	–	90	80	60
588	5.81	–	–	21	66	53	60	173	211	230	258	210	-1.6	7.2	12	30	45	–	90	80	60
1700	5.8	–	–	21	66	51	60	160	211	233	258	216	-0.6	7.2	12	30	45	–	90	80	60
1149	6.3	–	–	21	66	60	49	164	211	295	308	211	-0.7	6.8	12	30	45	–	90	78	60
1700	6.4	–	–	21	65	60	50	181	211	233	264	210	-0.8	6.8	12	30	45	–	90	79	60
1801	6.6	–	–	21	65	60	51	166	211	233	262	216	-0.6	6.8	12	30	45	–	90	79	60
1900	6.7	–	–	21	65	60	50	171	211	233	261	216	-0.6	6.8	12	30	45	–	90	79	60
2000	6.5	–	–	21	64	60	51	177	211	230	259	216	-0.6	6.8	12	30	45	–	90	79	60
2100	6.6	–	–	21	65	60	51	186	210	231	258	210	-0.6	6.8	12	30	45	–	90	79	60
2200	6.6	–	–	21	62	60	51	178	211	230	261	210	-0.8	6.9	12	30	45	–	90	79	60
2300	6.6	–	–	21	61	60	51	174	211	229	256	210	-0.8	6.8	12	30	45	–	90	79	60

KOMline-Sanderson Engineering Corporation

00571 - Operator Data Sheets - Page 1 - Rev D

Harrisonburg-Rockingham Regional Sewer Authority
K-S Biosolids drying System 00571

Date: 12-29-19 Operators: 112-8 [illegible] | 4-12 [illegible] | BSS

Operators Log Sheet

Time	DRYER FEED HOPPER H-1					DRYER - DRY-01									Discharge and Cooling Conveyors						
	Silo level	Feed Pump PCP-1		Feed Pump PCP-2		Motor		Dry Bed Temperatures				Dryer Exhaust		Weir Level	RV-1	CV-1	CV-2	CV-3	Water	Product	RV-2
	LT-2111	Speed 0-100%	Pressure PIT-2106	Speed 0-100%	Pressure PIT-2105	Speed &	Amps	Bed 1 TE-3002	Bed 2 TE-3006	Bed 3 TE-3008	Bed 4 TE-3007	TT-4001	PIT-3003		Speed 0-100%	Speed 0-100%	Speed 0-100%	Speed* 0-100%	Flow FI-4001	Temp TT-4009	Speed 0-100%
	Feet	Hz	PSIG	Hz	PSIG	Hz	Amps	°F	°F	°F	°F	°F	in. WC	in.	Hz	Hz	Hz	%	GPM	°F	Hz
1355	6.7	—	—	21	64	53	60	181	211	227	356	210	-0.4	6.8	12	30	45	—	90	79	60
205	6.8	—	—	21	65	55	60	173	211	[illegible]	356	310	-0.4	6.8	12	30	45	—	90	79	60
255	6.8	—	—	21	65	54	60	167	211	[illegible]	365	310	-0.1	6.8	12	30	45	—	90	79	60
400	7.0	—	—	21	65	55	60	173	211	228	355	310	-0.4	6.8	12	30	45	—	90	80	60
505	6.9	—	—	21	64	55	60	174	211	238	355	310	-0.5	6.8	12	30	45	—	90	80	60
600	6.9	—	—	21	65	56	60	169	211	241	354	210	-0.4	6.8	12	30	45	—	90	80	60
717	6.9	—	—	21	66	51	60	166	211	237	310	210	-0.4	6.8	12	30	45	—	90	80	60
835	6.6	—	—	22	64	59	55	166	211	826	353	211	-0.5	6.8	12	30	45	—	90	81	60
917	6.5	—	—	22	65	60	50	175	211	831	354	211	-0.4	6.6	12	30	45	—	90	80	60
1018	6.3	—	—	22	65	60	54	178	211	843	353	211	-0.5	6.6	12	30	45	—	90	80	60
1140	6.3	—	—	22	65	60	52	174	211	822	348	310	-0.4	6.8	12	30	45	—	90	80	60
1240	6.2	—	—	22	66	60	54	166	211	824	350	310	-0.6	6.8	12	30	45	—	90	80	60
1327	6.0	—	—	22	65	60	55	165	211	824	351	310	-0.1	6.8	12	30	45	—	90	79	60
1430	6.2	—	—	22	65	60	55	166	211	825	351	310	-0.6	6.8	12	30	45	—	90	79	60
1524	6.1	—	—	22	65	60	51	173	211	811	346	310	-0.6	6.6	12	30	45	—	90	79	60
1710	6.3	—	—	22	64	60	53	165	211	217	321	210	-0.3	6.8	12	30	45	—	90	80	60
1804	5.9	—	—	22	64	60	50	176	211	819	312	211	00-a	6.8	12	30	45	—	90	80	60
1903	6.1	—	—	22	63	60	51	169	211	818	311	311	-0.6	6.8	12	30	45	—	90	80	60
2002	6.0	—	—	22	64	60	50	164	211	820	315	311	-0.5	6.8	12	30	45	—	90	80	60
2106	5.9	—	—	22	64	60	51	161	211	818	315	311	-0.5	6.8	12	30	45	—	90	80	60
2212	6.6	—	—	22	64	60	54	204	211	220	292	210	-0.6	6.8	12	30	45	—	90	80	60
2304	6.6	—	—	22	65	60	55	167	211	813	311	210	-0.3	6.8	12	30	45	—	90	80	60

ROMLINE-SANDERSON ENGINEERING CORPORATION

D057 - Operator Data Sheets - Page 1 - Rev D

P:\Operations Share\Process & Instrument Equipment Manuals\Dryer Building\Kentlee Dryer\Kentlee Dryer Operator Log Sheets.xlsx

Harrisonburg-Rockingham Regional Sewer Authority
K-S Biosolids drying System 00571

Date: 12-29-19 Operators: 12-8 | 8-4 | 4-12
TAJ | EKM | BSS

Operators Log Sheet

Time	DRYER FEED HOPPER H-1					DRYER - DRY-01									Discharge and Cooling Conveyors						
	Silo level	Feed Pump PCP-1		Feed Pump PCP-2		Motor		Dry Bed Temperatures				Dryer Exhaust		Weir Level	RV-1	CV-1	CV-2	CV-3	Water	Product	RV-2
	LT-2111	Speed 0-100%	Pressure PIT-2108	Speed 0-100%	Pressure PIT-2105	Speed &	Amps	Bed 1 TE-3002	Bed 2 TE-3005	Bed 3 TE-3008	Bed 4 TE-3007	TT-3000	PIT-3003		Speed 0-100%	Speed 0-100%	Speed 0-100%	Speed 0-100%	Flow FI-4001	Temp TT-4009	Speed 0-100%
	Feet	Hz	PSIG	Hz	PSIG	Hz	Amps	°F	°F	°F	°F	°F	in. WC	in.	Hz	Hz	Hz	%	GPM	°F	Hz
0036	7.1	–	–	22	64	52	60	198	211	269	281	211	-0.5	6.4	12	30	45	–	90	79	60
200	6.8	–	–	22	65	51	60	155	211	300	302	211	-0.7	6.2	12	30	45	–	90	79	60
300	6.6	–	–	22	65	54	60	160	211	296	303	211	-1.0	6.2	12	30	45	–	90	78	60
357	6.5	–	–	22	65	52	60	171	211	274	297	211	-0.8	6.0	12	30	45	–	90	79	60
507	6.4	–	–	22	64	54	60	171	211	243	279	211	-0.8	6.0	12	30	45	–	90	81	60
601	6.3	–	–	22	64	54	60	174	211	227	263	211	-0.4	6.0	12	30	45	–	90	82	60
715	6.7	–	–	22	64	52	60	169	211	251	268	211	-0.3	6.0	12	30	45	–	90	81	60
830	6.8	–	–	22	64	60	54	165	211	262	280	211	-0.6	6.0	12	30	45	–	90	80	60
923	6.9	–	–	23	64	60	53	160	211	276	288	211	-0.3	5.5	12	30	45	–	90	79	60
1014	6.6	–	–	23	65	60	51	159	211	269	291	211	-0.2	5.3	12	30	45	–	90	79	60
1105	6.5	–	–	23	65	60	51	167	211	249	283	211	-0.2	5.5	12	30	45	–	90	80	60
1228	6.3	–	–	23	66	60	50	150	211	229	263	211	-0.5	6.5	12	30	45	–	90	80	60
1320	6.1	–	–	23	65	60	55	163	210	222	255	211	-0.9	6.5	12	30	45	–	90	80	60
1419	6.3	–	–	23	64	60	50	164	210	222	254	211	-1.0	7.5	12	30	45	–	90	79	60
1530	5.9	–	–	23	66	60	55	155	210	218	250	211	-0.4	7.7	12	30	45	–	90	78	60
1707	5.8	–	–	23	64	60	55	171	210	219	246	211	-0.4	8.2	12	30	45	–	90	79	60
1804	6.1	–	–	23	64	60	55	196	211	220	243	211	-0.5	8.2	12	30	45	–	90	79	60
1901	6.0	–	–	23	65	60	51	151	211	236	259	211	-0.7	8.2	12	30	45	–	90	79	60
1959	5.6	–	–	23	64	60	51	171	211	229	262	211	-0.7	8.2	12	30	45	–	90	78	60
2104	5.7	–	–	23	64	60	54	166	211	227	259	211	-0.6	8.2	12	30	45	–	90	78	60
2215	5.5	–	–	23	64	60	56	170	211	220	252	211	-0.4	8.2	12	30	45	–	90	79	60
2313	5.2	–	–	23	64	60	55	166	211	217	245	211	-0.2	8.2	12	30	45	–	90	80	60

Harrisonburg-Rockingham Regional Sewer Authority
K-S Biosolids drying System 00571

Date: 12-26-19 Operators: 12-8: TD | 8-4: MS/AB, JC | 4-12: BSS

Operators Log Sheet

Time	DRYER FEED HOPPER H-1					DRYER - DRY-01									Discharge and Cooling Conveyors						
	Silo level	Feed Pump PCP-1		Feed Pump PCP-2		Motor		Dry Bed Temperatures				Dryer Exhaust		Water Level	RV-1	CV-1	CV-2	CV-3	Water	Product	RV-2
	LT-2111	Speed 0-100%	Pressure PIT-2106	Speed 0-100%	Pressure PIT-2165	Speed &	Amps	Bed 1 TE-3002	Bed 2 TE-3006	Bed 3 TE-3008	Bed 4 TE-3007	TT-5000	PIT-3003		Speed 0-100%	Speed 0-100%	Speed 0-100%	Speed 0-100%	Flow FI-4001	Temp TT-4009	Speed 0-100%
	Feet	Hz	PSIG	Hz	PSIG	Hz	Amps	°F	°F	°F	°F	°F	in. WC	in.	Hz	Hz	Hz	%	GPM	°F	Hz
1630	5.7	–	–	23	66	57	60	198	214	217	237	211	-0.05	8.2	12	30	45	–	90	80	60
2100	5.6	–	–	23	66	56	60	169	211	222	250	211	-0.8	8.2	12	30	45	–	74 96	79	60
251	5.5	–	–	23	65	53	60	162	211	220	251	211	-0.2	8.2	12	30	45	–	96	80	60
1405	5.4	–	–	23	65	54	60	174	211	211	220	211	-0.3	8.2	12	30	45	–	90	80	60
1511	5.4	–	–	23	60	56	60	179	211	212	247	211	-0.4	8.2	12	30	45	–	90	80	60
551	5.4	–	–	23	60	54	60	167	211	216	243	211	-0.4	8.2	12	30	45	–	90	80	60
706	5.4	–	–	22	65	55	60	172	211	218	241	211	-0.4	8.3	12	30	45	–	90	81	60
1335	5.8	–	–	22	64	60	57	172	211	223	253	211	-0.3	8.1	12	30	45	–	90	79	60
1513	5.8	–	–	22	65	60	52	154	211	217	249	211	-0.4	8.3	12	30	45	–	90	80	60
1717	5.7	–	–	22	63	60	56	175	211	220	246	211	-0.4	8.4	22	30	45	–	90	79	60
1759	5.7	–	–	22	63	60	53	188	211	220	296	211	-0.9	8.4	12	30	45	–	90	79	60
1859	5.5	–	–	22	63	60	53	181	211	219	249	211	-0.4	8.4	12	30	45	–	90	79	60
2000	5.6	–	–	22	63	60	56	179	211	217	243	214	-0.4	8.4	12	30	45	–	90	79	60
2101	5.7	–	–	22	64	60	55	175	211	218	242	214	-0.4	8.9	12	30	45	–	90	80	60
2254	5.6	–	–	22	64	60	52	178	211	217	240	211	-0.4	8.4	12	30	45	–	90	80	60
2300	5.4	–	–	22	61	60	57	173	211	217	239	211	-0.4	8.4	12	30	45	–	90	80	60

Kofile in K-SANDERSON ENGINEERING CORPORATION

00571 - Operator Data Sheets - Page 1 - Rev D

P:\Operations Shared\Process & Instrument Equipment Manuals\Dryer Building\Louisa Dryer\Louisa Dryer Operator Log Sheets.xlsx

Harrisonburg-Rockingham Regional Sewer Authority
K•S Biosolids drying System 00571

Date: 12-27-19 Operators: 12-8 TAS | 8-4 MS | 4-12 BSS

Operators Log Sheet

Time	DRYER FEED HOPPER 11-1					DRYER - DRY-01									Discharge and Cooling Conveyors						
	Silo level	Feed Pump PCP-1		Feed Pump PCP-2		Motor		Dry Bed Temperatures				Dryer Exhaust		Wet Level	RV-1	CV-1	CV-2	CV-3	Water	Product	RV-2
	LT-2111	Speed 0-100%	Pressure PIT-2026	Speed 0-100%	Pressure PIT-2105	Speed 0-100%	Amps	Bed 1 TE-3002	Bed 2 TE-3006	Bed 3 TE-3008	Bed 4 TE-3007	TT-5000	PIT-3003		Speed 0-100%	Speed 0-100%	Speed 0-100%	Speed 0-100%	Flow FT-4001	Temp TT-4009	Speed 0-100%
	Feet	Hz	PSIG	Hz	PSIG	Hz	Amps	°F	°F	°F	°F	°F	in. WC	in.	Hz	Hz	Hz	%	GPM	°F	Hz
0034	6.1	–	–	22	64	56	60	202	214	218	238	211	-0.4	8.4	12	30	45	–	90	80	60
1062	5.1	–	–	22	64	56	60	164	211	233	255	211	-0.6	8.4	12	30	45	–	90	80	60
P&-	£3-	–	–	22	64	51	60	170	211	228	258	211	-0.6	8.4	12	30	45	–	90	80	60
WAL	X18-	–	–	22	65	52	60	170	211	223	256	211	-0.5	8.4	12	30	45	–	90	80	60
ESL	5.8	–	–	22	65	58	60	170	211	221	253	211	-0.2	8.4	12	30	45	–	90	80	60
WCL	5-18	–	–	22	65	57	60	176	211	218	247	211	-0.5	8.4	12	30	45	–	90	80	60
D&E	-6A	–	–	22	65	56	60	M-	211	216	246	211	-0.4	8.7	12	30	45	–	90	80	60
1Ma	6.0	–	–	22	65	60	55	179	211	222	253	211	-0.4	9.0	12	30	45	–	90	80	60
1Sb	5A	–	–	22	64	60	52	176	211	224	261	211	-0.4	9.0	12	30	45	–	90	79	60
1S6	5a	–	–	22	64	59	54	173	211	216	244	211	-0.4	9.4	12	30	45	–	90	79	60
021	5.4	–	–	22	64	40	56	176	211	214	259	211	-0.5	9.5	12	30	45	–	90	77	60
1Ti	5.2	–	–	22	65	&G	54	174	211	214	258	211	-0.6	9.5	12	30	45	–	90	78	60
1E1A	4.8	–	–	22	64	60	57	174	211	214	254	211	-0.5	9.5	12	30	45	–	90	78	60
2ea	4.0	–	–	22	63	60	56	177	211	214	252	211	-0.2	9.5	12	30	45	–	90	78	60
2hpP	4.8	–	–	2.2k	63	60	59	179	211	213	248	211	-0.4	9.5	12	30	45	–	90	79	60
2AM	5.6	–	–	22	65	60	57	181	211	214	248	211	-0.4	9.7	12	30	45	–	90	79	60
2BM	4.7	–	–	22	63	60	55	182	211	213	245	211	-0.4	9.7	12	30	45	–	90	80	60

Harrisonburg-Rockingham Regional Sewer Authority
K-S Biosolids drying System 00571

Date: 12-28-19 Operators: M-N / N-M
EBM / BM

Operators Log Sheet

Time	DRYER FEED HOPPER H-1					DRYER - DRY-01									Discharge and Cooling Conveyors						
	Silo level	Feed Pump PCP-1		Feed Pump PCP-2		Motor		Dry Bed Temperatures				Dryer Exhaust		Weir Level	RV-1	CV-1	CV-2	CV-3	Water	Product	RV-2
	LT-2111	Speed 0-100%	Pressure PIT-2106	Speed 0-100%	Pressure PIT-2105	Speed &	Amps	Bed 1 TE-3002	Bed 2 TE-3005	Bed 3 TE-3006	Bed 4 TE-3007	TT-5000	PIT-3003		Speed 0-100%	Speed 0-100%	Speed 0-100%	Speed 0-100%	Flow FI-4001	Temp TT-4009	Speed 0-100%
	Feet	Hz	PSIG	Hz	PSIG	Hz	Amps	°F	°F	°F	°F	°F	in. WC	in.	Hz	Hz	Hz	%	GPM	°F	Hz
0043	5.7	—	—	22	64	60	61	179	211	213	241	211	-0.4	9.7	12	30	45	—	90	80	60
0151	5.6	—	—	22	64	60	62	178	211	214	242	211	-0.4	10.5	12	30	45	—	90	80	60
0221	5.6	—	—	22	65	60	56	178	211	214	243	211	-0.4	10.5	12	30	45	—	90	80	60
0312	5.4	—	—	22	64	60	59	180	211	214	246	211	-0.4	10.5	12	30	45	—	90	79	60
0421	5.6	—	—	22	65	60	62	186	211	215	248	211	-0.4	10.5	12	30	45	—	90	79	60
0517	5.6	—	—	22	64	60	60	184	211	214	244	211	-0.4	10.4	12	30	45	—	90	79	60
0606	5.3	—	—	22	65	60	60	183	211	214	242	211	-0.4	10.5	12	30	45	—	90	80	60
0714	5.1	—	—	22	64	60	56	180	211	214	242	211	-0.5	10.7	12	30	45	—	90	80	60
0815	5.3	—	—	22	64	60	60	186	211	215	246	211	-0.5	11.0	12	30	45	—	90	80	60
0940	5.2	—	—	22	64	60	62	182	211	216	248	211	-0.5	11.0	12	30	45	—	90	79	60
1015	5.2	—	—	22	65	60	59	181	211	215	249	211	-0.5	11.0	12	30	45	—	90	79	60
1147	5.2	—	—	22	65	60	62	186	211	215	244	211	-0.1	11.0	12	30	45	—	90	79	60
1248	5.4	—	—	22	65	60	60	185	211	214	240	211	-0.4	11.0	12	30	45	—	90	79	60
1353	5.2	—	—	22	65	60	61	184	211	214	238	211	-0.4	11.2	12	30	45	—	90	79	60
1450	5.2	—	—	22	65	60	57	187	211	215	238	211	-0.4	11.5	12	30	45	—	90	79	60
1604	5.3	—	—	22	65	60	58	182	211	215	238	211	-0.4	11.5	12	30	45	—	90	79	60
1704	5.3	—	—	22	63	60	58	185	211	215	239	211	-0.4	11.7	12	30	45	—	90	79	60
1805	5.1	—	—	22	63	60	61	189	211	216	241	211	-0.4	11.9	12	30	45	—	90	79	60
1910	5.1	—	—	22	64	60	64	184	211	216	241	211	-0.4	11.9	12	30	45	—	90	79	60
2002	5.0	—	—	22	63	60	63	187	211	216	240	211	-0.4	11.9	12	30	45	—	90	79	60
2106	5.3	—	—	22	63	60	58	181	211	217	238	211	-0.4	12.1	12	30	45	—	90	79	60
1018	5.1	—	—	22	63	60	60	184	211	217	239	211	-0.4	12.4	12	30	45	—	90	79	60
1104	5.2	—	—	22	64	60	61	179	211	217	239	211	-0.4	12.6	12	30	45	—	90	79	60

Harrisonburg-Rockingham Regional Sewer Authority
K-S Biosolids drying System 00571

Date: 12/29/19 Operators: M-N / N-M EPm / BM

Operators Log Sheet

Time	DRYER FEED HOPPER 11-1					DRYER - DRY-01									Discharge and Cooling Conveyors						
	Silo level	Feed Pump PCP-1		Feed Pump PCP-2		Motor		Dry Bed Temperatures				Dryer Exhaust		Wet Level	RV-1	CV-1	CV-2	CV-3	Water	Product	RV-2
	LT-2111	Speed 0-100%	Pressure PIT-2108	Speed 0-100%	Pressure PIT-2105	Speed &	Amps	Bed 1 TE-3002	Bed 2 TE-3005	Bed 3 TE-3006	Bed 4 TE-3007	TT-6000	PIT-3003		Speed 0-100%	Speed 0-100%	Speed 0-100%	Speed 0-100%	Flow FI-4031	Temp TT-4009	Speed 0-100%
	Feet	Hz	PSIG	Hz	PSIG	Hz	Amps	°F	°F	°F	°F	°F	In. WC	In.	Hz	Hz	Hz	%	GPM	°F	Hz
0041	5.3	–	–	22	64	60	57	182	211	218	241	211	-0.4	12.6	12	30	45	–	90	80	60
0150	5.2	–	–	22	64	60	57	182	211	219	246	211	-0.4	12.8	12	30	45	–	90	80	60
0306	5.3	–	–	22	64	60	61	184	211	220	250	211	-0.4	12.6	12	30	45	–	90	80	60
0409	5.2	–	–	22	65	60	63	182	211	220	251	211	-0.4	12.2	12	30	45	–	90	81	60
0512	5.2	–	–	22	65	60	60	187	211	218	250	211	-0.4	12.2	12	30	45	–	90	81	60
0611	5.3	–	–	22	64	60	58	184	211	218	249	211	-0.4	12.2	12	30	45	–	90	81	60
0711	5.1	–	–	22	64	60	62	182	211	218	248	211	-0.4	12.2	12	30	45	–	90	81	60
0835	5.2	–	–	22	65	60	64	181	211	217	246	211	-0.4	12.2	12	30	45	–	90	81	60
0915	5.2	–	–	22	65	60	58	184	211	217	246	211	-0.4	12.2	12	30	45	–	90	80	60
1028	5.2	–	–	22	65	60	62	183	211	217	246	210	-0.4	12.2	12	30	45	–	90	80	60
1102	5.4	–	–	22	65	60	57	179	211	218	247	211	-0.4	12.2	12	30	45	–	90	80	60
1252	5.2	–	–	22	65	60	60	181	211	219	249	210	-0.4	12.2	12	30	45	–	90	80	60
1404	5.1	–	–	22	63	60	57	187	211	219	252	210	-0.4	12.2	12	30	45	–	90	80	60
1511	5.1	–	–	22	63	59	57	181	211	219	254	210	-0.4	11.9	12	30	45	–	90	80	60
1612	5.0	–	–	22	64	60	61	181	211	219	253	210	-0.4	11.9	12	30	45	–	90	80	60
1713	5.0	–	–	22	63	60	60	186	211	218	251	210	-0.4	11.9	12	30	45	–	90	80	60
1816	5.0	–	–	22	63	60	59	185	211	217	251	210	-0.4	11.9	12	30	45	–	90	80	60
1915	5.0	–	–	22	63	60	63	183	211	217	251	210	-0.4	11.9	12	30	45	–	90	80	60
2014	5.1	–	–	22	64	60	64	185	211	218	253	210	-0.4	11.9	12	30	45	–	90	81	60
2115	5.1	–	–	22	62	60	62	183	211	217	252	210	-0.4	11.9	12	30	45	–	90	81	60
2210	5.0	–	–	22	62	60	64	187	210	217	250	210	-0.4	11.5	12	30	45	–	90	81	60
2317	4.9	–	–	22	62	60	62	181	211	217	249	210	-0.4	11.5	12	30	45	–	90	81	60

KOMLINE-SANDERSON ENGINEERING CORPORATION

D0571 - Operator Data Sheets - Page 1 - Rev D

P:\Operations Shared\Process & Instrument Replacement Manuals\Dryer Bulk\Dry\Kruttke Dryer\Kruttke Dryer Operator Log K-sen.xlsx

Harrisonburg-Rockingham Regional Sewer Authority
K-S Biosolids drying System 00571

Date: 12/30/19 Operators: 12-8 CEM / 8-4 MS / 4-12 BM

Operators Log Sheet

Time	DRYER FEED HOPPER H-1					DRYER - DRY-01									Discharge and Cooling Conveyors						
	Silo level	Feed Pump PCP-1		Feed Pump PCP-2		Motor		Dry Bed Temperatures				Dryer Exhaust		Wetr Level	RV-1	CV-1	CV-2	CV-3	Water	Product	RV-2
	LT-2111	Speed 0-100%	Pressure PIT-2106	Speed 0-100%	Pressure PIT-2101	Speed &	Amps	Bed 1 TE-3002	Bed 2 TE-3006	[illegible]	[illegible]	TT-5000	PIT-3003		Speed 0-100%	Speed 0-100%	Speed 0-100%	Speed [illegible]	Flow FT-4OR	Temp TT-4009	Speed 0-100%
	Feet	Hz	PSIG	Hz	PSIG	Hz	Amps	°F	°F	°F	°F	°F	in. WC	in.	Hz	Hz	Hz	%	GPM	°F	Hz
0040	4.6	–	–	22	61	60	53	185	210	216	247	210	-0.4	11.5	12	30	45	–	80	81	60
0145	4.8	–	–	22	61	60	59	182	210	216	248	210	-0.4	11.5	12	30	45	–	90	81	60
0232	4.8	–	–	22	61	60	63	183	210	217	248	210	-0.4	11.5	12	30	45	–	90	81	60
0344	5.0	–	–	22	61	60	60	181	210	216	249	210	-0.4	11.5	12	30	45	–	90	81	60
0404	5.2	–	–	22	60	60	57	187	210	216	251	210	-0.4	11.5	12	30	45	–	90	81	60
0511	5.0	–	–	22	60	60	58	181	210	218	257	210	-0.4	11.5	12	30	45	–	90	81	60
0602	5.0	–	–	22	60	60	63	184	210	218	260	210	-0.5	10.9	12	30	45	–	90	81	60
0735	4.9	–	–	22	61	60	62	185	210	214	249	210	-0.6	10.7	12	30	45	–	90	81	60
0956	5.0	–	–	22	61	60	63	183	210	218	258	210	-0.4	10.8	12	30	45	–	90	78	60
1141	5.0	–	–	22	65	60	59	179	210	215	256	210	-0.4	10.7	12	30	45	–	90	79	60
1228	4.9	–	–	22	60	60	59	183	210	214	253	210	-0.4	10.5	12	30	45	–	90	79	60
1335	5.2	–	–	22	60	60	61	186	210	213	247	210	-0.4	10.5	12	30	45	–	90	80	60
1528	5.3	–	–	22	64	60	60	183	210	214	249	210	-0.4	10.4	12	30	45	–	90	80	60
1710	5.2	–	–	22	63	60	58	184	210	215	256	210	-0.4	10.4	12	30	45	–	90	79	60
1830	5.3	–	–	22	63	60	61	185	210	215	259	210	-0.4	10.0	12	30	45	–	90	79	60
1924	5.2	–	–	22	63	60	60	178	210	213	256	210	-0.4	10.0	12	30	45	–	90	80	60
2041	5.2	–	–	22	63	60	59	168	210	213	253	210	-0.4	9.9	12	30	45	–	90	80	60
2117	5.3	–	–	22	63	60	56	179	210	214	252	210	-0.4	9.9	12	30	45	–	90	81	60
2227	5.4	–	–	22	64	60	61	181	210	217	251	210	-0.4	9.9	12	30	45	–	90	80	60
2330	5.5	–	–	22	64	60	55	185	210	214	252	210	-0.4	9.9	12	30	45	–	90	80	60

KOMline-Sanderson Engineering Corporation

00571 - Operator Data Sheets - Page 1 - Rev D

F:\Operations Shared\Process & Instrument Equipment Manuals\Dryer Building\Komline Dryer\Komline Dryer Operator Log Sheets.xlsx

Harrisonburg-Rockingham Regional Sewer Authority
K-S Biosolids drying System 00571

Date: 12/31/19 Operators: 12-8 CRM / 8-4 MS / 4-12 BM

Operators Log Sheet

Time	DRYER FEED HOPPER, H-1					DRYER - DRY-01									Discharge and Cooling Conveyors						
	Silo level	Feed Pump PCP-1		Feed Pump PCP-2		Motor		Dry Bed Temperatures				Dryer Exhaust		Weir Level	RV-1	CV-1	CV-2	CV-3	Water	Product	RV-2
	LT-2111	Speed 0-100%	Pressure PIT-2106	Speed 0-100%	Pressure PIT-2105	Speed &	Amps	Bed 1 TE-3002	Bed 2 TE-3006	Bed 3 TE-3006	Bed 4 TE-3007	TT-6000	PIT-3003		Speed 0-100%	Speed 0-100%	Speed 0-100%	Speed 0-100%	Flow FI-4001	Temp TT-4009	Speed 0-100%
	Feet	Hz	PSIG	Hz	PSIG	Hz	Amps	°F	°F	°F	°F	°F	In. WC	In.	Hz	Hz	Hz	%	GPM	°F	Hz
0044	5.2	–	–	22	62	60	60	176	210	214	254	210	-0.4	9.9	12	30	45	–	98	81	60
0132	5.3	–	–	22	62	60	58	178	210	213	253	210	-0.4	9.9	12	30	45	–	90	81	60
0210	5.1	–	–	22	61	60	57	183	210	213	252	210	-0.4	9.9	12	30	45	–	90	81	60
0308	5.2	–	–	22	61	60	58	178	210	214	251	210	-0.4	9.9	12	30	45	–	90	81	60
0404	5.2	–	–	22	63	60	58	178	210	213	250	210	-0.5	9.9	12	30	45	–	90	81	60
0507	5.2	–	–	22	65	60	56	178	210	214	250	210	-0.4	9.9	12	30	45	–	90	81	60
0624	5.4	–	–	22	78	60	55	174	210	214	253	210	-0.4	9.9	12	30	45	–	90	81	60
0734	5.3	–	–	22	80	60	57	181	210	216	259	210	-0.4	9.6	12	30	45	–	90	81	60
1122	5.5	–	–	22	73	60	59	186	210	217	265	210	-0.4	9.1	12	30	45	–	90	80	60
1520	5.0	–	–	22	74	60	58	170	210	214	255	210	-0.4	9.1	12	30	45	–	90	80	60
1710	5.2	–	–	22	74	60	58	173	210	214	253	210	-0.4	9.1	12	30	45	–	90	80	60
1909	4.9	–	–	22	74	60	57	177	210	214	254	210	-0.4	9.1	12	30	45	–	90	80	60
2006	5.1	–	–	22	74	60	55	162	210	215	255	210	-0.4	9.1	12	30	45	–	90	80	60
2125	5.1	–	–	22	73	60	55	178	210	215	256	210	-0.4	9.1	12	30	45	–	90	80	60
2234	4.9	–	–	22	73	60	56	175	210	215	255	210	-0.4	8.9	12	30	45	–	90	80	60
2344	5.0	–	–	22	78	60	55	171	210	216	255	210	-0.4	8.9	12	30	45	–	90	80	60

KOMLINE-SANDERSON ENGINEERING CORPORATION

D0571 - Operator Data Sheets - Page 1 - Rev D

P:\Operations\Biosolids & Industrial Equipment\Dryer Building\Komline Dryer\Komline Dryer Operator Log Sheets.xlsx

Harrisonburg-Rockingham Regional Sewer Authority
K-S Biosolids drying System 00571

Date: 01/01/20 Operators: 12-8 / 8-4 / 4-12
ERM / BSS / BM

Operators Log Sheet

Time	DRYER FEED HOPPER H-1					DRYER - DRY-01									Discharge and Cooling Conveyors						
	Silo level	Feed Pump PCP-1		Feed Pump PCP-2		Motor		Dry Bed Temperatures				Dryer Exhaust		Weir Level	RV-1	CV-1	CV-2	CV-3	Water	Product	RV-2
	LT-2111	Speed 0-100%	Pressure PIT-2106	Speed 0-100%	Pressure PIT-2105	Speed &	Amps	Bed 1 TE-3002	Bed 2 TE-3006	Bed 3 TE-3005	Bed 4 TE-3007	TT-3000	PIT-3003		Speed 0-100%	Speed 0-100%	Speed 0-100%	Speed 0-100%	Flow FI-4001	Temp TT-4009	Speed 0-100%
	Feet	Hz	PSIG	Hz	PSIG	Hz	Amps	°F	°F	°F	°F	°F	in. WC	in.	Hz	Hz	Hz	%	GPM	°F	Hz
0044	4.8	—	—	22	74	60	54	172	210	219	258	210	-0.4	8.9	12	30	45	—	90	80	60
0136	5.0	—	—	22	68	60	54	179	210	218	260	210	-0.4	8.9	12	30	45	—	90	80	60
0223	5.0	—	—	22	69	60	56	172	210	216	260	210	-0.4	8.9	12	30	45	—	90	80	60
0310	5.0	—	—	22	66	60	58	177	210	218	260	210	-0.5	8.9	12	30	45	—	90	80	60
0406	5.1	—	—	22	67	60	59	176	210	215	252	210	-0.4	8.7	12	30	45	—	90	81	60
0509	5.1	—	—	22	66	60	57	175	210	215	247	210	-0.4	8.7	12	30	45	—	90	81	60
0618	5.0	—	—	22	66	60	53	163	210	216	247	210	-0.4	8.9	12	30	45	—	90	82	60
0726	5.1	—	—	22	65	60	56	166	210	214	248	210	-0.4	8.9	12	30	45	—	90	82	60
0908	5.3	—	—	22	65	60	56	177	210	215	245	210	-0.4	8.9	12	30	45	—	90	82	60
1005	5.4	—	—	22	65	60	55	169	210	216	245	210	-0.4	8.9	12	30	45	—	90	81	60
1105	5.0	—	—	22	65	60	53	173	210	216	246	210	-0.4	8.9	12	30	45	—	90	81	60
1159	5.1	—	—	22	66	60	53	163	210	216	247	210	-0.4	8.9	12	30	45	—	90	80	60
1253	5.2	—	—	22	65	60	53	163	210	217	248	210	-0.4	8.9	12	30	45	—	90	80	60
1410	5.2	—	—	22	65	60	53	163	210	218	249	210	-0.4	8.9	12	30	45	—	90	80	60
1515	4.9	—	—	22	65	60	54	166	210	217	249	210	-0.5	8.9	12	30	45	—	90	80	60
1701	5.0	—	—	22	65	60	56	166	210	218	250	210	-0.4	8.9	12	30	45	—	90	80	60
1824	5.0	—	—	22	65	60	55	171	210	218	248	210	-0.5	8.9	12	30	45	—	90	80	60
1927	5.0	—	—	22	64	60	52	168	210	218	250	210	-0.4	8.9	12	30	45	—	90	80	60
2044	4.9	—	—	22	63	60	57	165	210	217	251	210	-0.4	8.9	12	30	45	—	90	80	60
2111	5.0	—	—	22	64	60	56	164	210	218	250	210	-0.4	8.9	12	30	45	—	90	80	60
2232	5.1	—	—	22	63	60	54	170	210	217	252	210	-0.4	8.9	12	30	45	—	90	80	60
2312	5.2	—	—	22	64	60	56	172	211	216	249	210	-0.4	8.8	12	30	45	—	90	80	60

KOMLINE-SANDERSON ENGINEERING CORPORATION

DOG01 - Operator Data Sheets - Page 1 - Rev D

F:\Operations Sheet\Process & Instrument Equipment Manuals\Dryer Building\Komline Dryer\Komline Dryer Operator Log Sheets.xlsx

Harrisonburg-Rockingham Regional Sewer Authority
K•S Biosolids drying System 00571

Date: 01/02/2020 Operators: 12-8 / 8-4 / 4-12
Ebm / JC

Operators Log Sheet

Time	DRYER FEED HOPPER H-1					DRYER - DRY-01									Discharge and Cooling Conveyors						
	Silo level	Feed Pump PCP-1		Feed Pump PCP-2		Motor		Dry Bed Temperatures				Dryer Exhaust		Weir Level	RV-1	CV-1	CV-2	CV-3	Water	Product	RV-2
	LT-2111	Speed 0-100%	Pressure PIT-2106	Speed 0-100%	Pressure PIT-2105	Speed &	Amps	Bed 1 TE-3002	Bed 2 TE-3005	Bed 3 TE-3006	Bed 4 TE-3007	TT-5000	PIT-3003		Speed 0-100%	Speed 0-100%	Speed 0-100%	Speed 0-100%	Flow FI-4001	Temp TT-4009	Speed 0-100%
	Feet	Hz	PSIG	Hz	PSIG	Hz	Amps	°F	°F	°F	°F	°F	in. WC	in.	Hz	Hz	Hz	%	GPM	°F	Hz
0052	4.9	–	–	22	63	60	55	176	210	216	249	210	-0.4	8.8	12	30	45	–	90	81	60
0158	5.1	–	–	22	63	60	52	168	210	216	248	210	-0.4	8.8	12	30	45	–	90	81	60
0209	5.0	–	–	22	63	60	55	167	210	216	249	210	-0.4	8.8	12	30	45	–	90	81	60
0310	5.0	–	–	22	64	60	52	173	210	216	249	210	-0.4	8.8	12	30	45	–	90	80	60
0408	5.2	–	–	22	63	60	55	161	210	217	249	210	-0.4	8.8	12	30	45	–	90	81	60
0507	5.3	–	–	22	64	60	55	173	210	216	249	211	-0.4	8.8	12	30	45	–	90	81	60
0623	5.3	–	–	22	63	60	55	171	211	216	247	211	-0.4	8.8	12	30	45	–	90	81	60
0746	5.3	–	–	22	65	60	56	165	211	215	246	211	-0.4	8.8	12	30	45	–	90	81	60
0810	5.3	–	–	22	65	60	56	162	210	216	245	211	-0.4	8.8	12	30	45	–	90	81	60
0906	5.2	–	–	22	63	60	53	165	210	216	246	210	-0.4	8.8	12	30	45	–	90	81	60
1016	4.9	–	–	22	64	60	55	174	211	216	244	211	-0.4	8.8	12	30	45	–	90	81	60
1112	5.5	–	–	22	63	60	54	175	210	218	248	211	-0.4	8.8	12	30	45	–	90	80	60
1349	5.4	–	–	22	63	60	52	176	210	218	252	210	-0.4	8.7	12	30	45	–	90	79	60
1701	5.3	–	–	22	64	60	54	168	210	216	243	210	-0.4	8.7	12	30	45	–	90	79	60
1823	5.3	–	–	22	64	60	55	161	210	217	247	210	-0.4	8.9	12	30	45	–	90	79	60
1922	5.4	–	–	22	64	60	52	168	210	217	250	210	-0.4	8.8	12	30	45	–	90	79	60
2037	5.2	–	–	22	63	60	53	164	210	216	251	210	-0.4	8.8	12	30	45	–	90	79	60
2122	5.3	–	–	22	65	60	57	159	210	216	249	210	-0.4	8.8	12	30	45	–	90	80	60
2235	5.2	–	–	22	63	60	55	164	210	216	247	210	-0.4	8.9	12	30	45	–	90	79	60
2344	5.2	–	–	22	65	60	52	163	210	216	248	210	-0.4	8.8	12	30	45	–	90	79	60

HOWLINE-SANDERSON ENGINEERING CORPORATION

00571 - Operator Data Sheets - Page 1 - Rev 0

Harrisonburg-Rockingham Regional Sewer Authority
K-S Biosolids drying System 00571

Date: 01/03/2020 Operators: 12-8 Eben / 8-4 / 4-12 BM

Operators Log Sheet

Time	DRYER FEED HOPPER H-1					DRYER - DRY-01																							
	Silo level	Feed Pump PCP-1		Feed Pump PCP-2		Motor		Dry Bed Temperatures				Dryer Exhaust		Wetr Level	RV-1	CV-1	CV-2	CV-3	Water	Product	RV-2
	LT-2111	Speed 0-100%	Pressure PIT-2108	Speed 0-100%	Pressure PIT-2108	Speed &	Amps	Bed 1 TE-3002	Bed 2 TE-3005	Bed 3 TE-3008	Bed 4 TE-3007	TT-5000	PIT-3003		Speed 0-100%	Speed 0-100%	Speed 0-100%	Speed 0-100%	Flow FI-4001	Temp TT-4009	Speed 0-100%
	Feet	Hz	PSIG	Hz	PSIG	Hz	Amps	°F	°F	°F	°F	°F	in. WC	in.	Hz	Hz	Hz	%	GPM	°F	Hz
0041	5.3	–	–	22	64	60	53	165	210	217	247	210	-0.4	8.8	12	30	45	–	90	79	60
0139	5.2	–	–	22	64	60	55	186	210	216	247	210	-0.4	8.8	12	30	45	–	90	80	60
0230	5.2	–	–	22	62	60	56	163	210	217	248	210	-0.4	8.8	12	30	45	–	90	80	60
0312	5.3	–	–	22	65	60	54	174	210	217	248	210	-0.4	8.8	12	30	45	–	90	80	60
0414	5.3	–	–	22	63	60	55	174	210	217	248	210	-0.4	8.8	12	30	45	–	90	80	60
0509	5.6	–	–	22	64	60	55	184	210	217	249	210	-0.4	8.8	12	30	45	–	90	80	60
0616	5.3	–	–	22	63	60	52	171	210	218	249	210	-0.4	8.8	12	30	45	–	90	80	60
0737	5.5	–	–	22	63	60	53	174	210	217	249	210	-0.4	8.8	12	30	45	–	90	79	60
1022	5.5	–	–	22	63	60	55	178	210	218	249	210	-0.4	8.8	12	30	45	–	90	79	60
1112	5.2	–	–	22	62	60	53	176	210	217	249	210	-0.5	8.8	12	30	45	–	90	80	60
1400	4.9	–	–	22	65	60	54	172	210	217	249	210	-0.4	8.8	12	30	45	–	90	79	60
1630	4.9	–	–	22	64	60	53	170	210	217	250	210	-0.4	8.8	12	30	45	–	90	79	60
1712	4.9	–	–	22	64	60	55	169	210	217	251	210	-0.4	8.8	12	30	45	–	90	79	60
1805	4.7	–	–	22	62	60	56	170	210	218	251	210	-0.4	8.8	12	30	45	–	90	79	60
1909	4.8	–	–	22	64	60	54	177	210	218	250	210	-0.4	8.8	12	30	45	–	90	79	60
2013	4.7	–	–	22	64	60	52	176	210	217	250	210	-0.4	8.8	12	30	45	–	90	79	60
2116	4.8	–	–	22	64	60	55	172	210	216	250	210	-0.4	8.8	12	30	45	–	90	79	60
2210	4.6	–	–	22	63	60	53	155	210	218	250	210	-0.4	8.8	12	30	45	–	90	79	60
2303	4.6	–	–	22	63	60	54	162	210	218	250	210	-0.4	8.8	12	30	45	–	90	80	60

KOMline-Sanderson Engineering Corporation

D0571 - Operator Data Sheets - Page 1 - Rev D

P:\Operations Docs\Process & Instrument Equipment Manuals\Dryer Building\Komline Dryer\Komline Dryer Operator Log Sheets.xlsx

Harrisonburg-Rockingham Regional Sewer Authority
K-S Biosolids drying System 00571

Date: 01/04/2020 Operators: M-N / N-M
BSS / TAS

Operators Log Sheet

Time	DRYER FEED HOPPER H-1					DRYER - DRY-01									Discharge and Cooling Conveyors						
	Silo level	Feed Pump PCP-1		Feed Pump PCP-2		Motor		Dry Bed Temperatures				Dryer Exhaust		Weir Level	RV-1	CV-1	CV-2	CV-3	Water	Product	RV-2
	LT-2111	Speed 0-100%	Pressure PIT-2106	Speed 0-100%	Pressure PIT-2105	Speed &	Amps	Bed 1 TE-3002	Bed 2 TE-3006	Bed 3 TE-3008	Bed 4 TE-3007	TT-5000	PIT-3003		Speed 0-100%	Speed 0-100%	Speed 0-100%	Speed 0-100%	Flow FI-4001	Temp TT-4009	Speed 0-100%
	Feet	Hz	PSIG	Hz	PSIG	Hz	Amps	°F	°F	°F	°F	°F	in. WC	in.	Hz	Hz	Hz	%	GPM	°F	Hz
0107	4.4	–	–	22	65	60	52	175	210	218	251	210	-0.4	8.8	12	30	45	–	90	80	60
0202	4.3	–	–	22	65	60	55	168	210	219	252	210	-0.4	8.8	12	30	45	–	90	80	60
0309	4.1	–	–	22	65	60	53	162	210	218	252	210	-0.4	8.8	12	30	45	–	90	80	60
0357	4.2	–	–	22	65	60	56	170	210	221	253	210	-0.4	8.8	12	30	45	–	90	80	60
0509	3.8	–	–	22	66	60	57	163	210	219	252	210	-0.4	8.8	12	30	45	–	90	80	60
0603	3.8	–	–	22	66	60	52	176	210	218	252	210	-0.4	8.8	12	30	45	–	90	80	60
0702	3.7	–	–	22	67	60	52	179	210	219	252	210	-0.4	8.8	12	30	45	–	90	80	60
0804	3.4	–	–	22	67	60	55	165	210	218	252	210	-0.4	8.8	12	30	45	–	90	80	60
0900	3.5	–	–	22	66	60	54	162	210	218	253	210	-0.4	8.8	12	30	45	–	90	80	60
1015	3.1	–	–	22	66	60	52	166	210	218	253	210	-0.4	8.8	12	30	45	–	90	80	60
1119	3.4	–	–	22	67	60	54	150	210	219	253	210	-0.4	8.8	12	30	45	–	90	80	60
1301	3.2	–	–	22	65	60	56	181	210	219	253	210	-0.4	8.8	12	30	45	–	90	79	60
1451	2.8	–	–	22	65	60	56	159	210	218	253	210	-0.4	8.8	12	30	45	–	90	79	60
1537	2.8	–	–	20	64	60	54	174	210	218	253	210	-0.4	8.8	12	30	45	–	90	80	60
1614	2.8	–	–	20	64	60	56	167	210	226	253	210	-0.4	8.8	12	30	45	–	90	80	60
1731	2.9	–	–	20	65	60	53	162	210	236	260	210	-0.5	8.8	12	30	45	–	90	80	60
1808	2.9	–	–	20	67	60	57	173	210	240	262	210	-0.4	8.8	12	30	45	–	90	80	60
1919	2.9	–	–	20	68	60	57	169	210	236	264	210	-0.4	8.8	12	30	45	–	90	78	60
2036	2.8	–	–	20	68	60	53	177	210	226	259	210	-0.4	8.6	12	30	45	–	90	78	60
2114	3.0	–	–	20	68	60	57	172	210	225	257	210	-0.4	8.6	12	30	45	–	90	79	60
2252	2.9	–	–	20	70	60	57	172	210	222	249	210	-0.4	8.4	12	30	45	–	90	79	60

KOMLINE-SANDERSON ENGINEERING CORPORATION

D0571 - Operator Data Sheets - Page 1 - Rev 0

P:\Operations Plant Process & Instrument Equipment Manuals\Dryer Building\KomLine DryerWorkflow Dryer Operator Log Sheets.xlsx

Harrisonburg-Rockingham Regional Sewer Authority
K-S Biosolids drying System 00571

Date: 1-5-20 Operators: M-N / N-M BSS / TMS

Operators Log Sheet

Time	DRYER FEED HOPPER H-1					DRYER - DRY-01									Discharge and Cooling Conveyors						
	Silo level	Feed Pump PCP-1		Feed Pump PCP-2		Motor		Dry Bed Temperatures				Dryer Exhaust		Weir Level	RV-1	CV-1	CV-2	CV-3	Water	Product	RV-2
	LT-2111	Speed 0-100%	Pressure PIT-2108	Speed 0-100%	Pressure PIT-2106	Speed &	Amps	Bed 1 TE-3002	Bed 2 TE-3005	Bed 3 TE-3006	Bed 4 TE-3007	TT-5000	PIT-3003		Speed 0-100%	Speed 0-100%	Speed 0-100%	Speed 0-100%	Flow FI-4001	Temp TT-4008	Speed 0-100%
	Post	Hz	PSIG	Hz	PSIG	Hz	Amps	°F	°F	°F	°F	°F	in. WC	in.	Hz	Hz	Hz	%	GPM	°F	Hz
0106	2.8	-	-	20	71	60	56	166	210	225	250	211	-0.4	8.4	12	30	45	-	90	79	60
0159	2.7	-	-	20	70	60	52	169	210	226	252	211	-0.5	8.4	12	30	45	-	90	79	60
0257	2.7	-	-	20	70	60	57	169	210	228	254	211	-0.4	8.4	12	30	45	-	90	78	60
0400	2.5	-	-	20	71	60	57	168	211	232	254	211	-0.4	8.4	12	30	45	-	90	77	60
0504	2.4	-	-	20	74	60	53	168	211	226	255	211	-0.4	8.4	12	30	45	-	90	78	60
0605	2.5	-	-	20	74	60	54	165	211	227	255	211	-0.4	8.4	12	30	45	-	90	79	60
0708	2.1	-	-	20	73	60	53	162	211	230	254	211	-0.4	8.4	12	30	45	-	90	79	60
0811	2.0	-	-	20	75	60	53	172	211	227	253	211	-0.4	8.4	12	30	45	-	90	79	60
0905	1.9	-	-	20	77	60	56	163	211	226	252	211	-0.4	8.4	12	30	45	-	90	79	60
1008	2.0	-	-	20	79	60	55	170	211	229	253	211	-0.4	8.4	12	30	45	-	90	79	60
1117	1.6	-	-	20	77	60	57	166	211	229	253	211	-0.4	8.4	12	30	45	-	90	78	60
1204	2.2	-	-	20	70	60	58	172	211	229	255	211	-0.4	8.4	12	30	45	-	90	79	60
1406	2.6	-	-	20	70	60	57	171	211	229	255	211	-0.4	8.4	12	30	45	-	90	79	60
1506	2.7	-	-	20	68	60	57	178	211	225	254	211	-0.4	8.4	12	30	45	-	90	78	60
1611	3.2	-	-	20	66	60	57	176	211	228	253	211	-0.5	8.4	12	30	45	-	90	79	60
1704	3.5	-	-	20	66	60	53	172	211	224	251	211	-0.4	8.4	12	30	45	-	90	79	60
1804	3.7	-	-	20	65	60	52	173	211	221	248	211	-0.4	8.4	12	30	45	-	90	79	60
1905	4.0	-	-	20	65	60	56	170	211	224	248	211	-0.4	8.6	12	30	45	-	90	80	60
1956	4.2	-	-	20	65	60	53	172	211	225	250	211	-0.4	8.6	12	30	45	-	90	79	60
2101	4.6	-	-	20	66	60	55	174	211	223	250	211	-0.4	8.6	12	30	45	-	90	80	60
2200	5.0	-	-	20	64	60	53	175	211	221	250	211	-0.4	8.6	12	30	45	-	90	79	60
2354	5.0	-	-	20	65	60	56	177	211	219	248	211	-0.4	8.6	12	30	45	-	90	80	60

KOMline-Sanderson Engineering Corporation

D0571 - Operator Data Sheets - Page 1 - Rev 0

P:\Operations Sheet\Process & Instrument Equipment Manuals\Dryer Building\Komline Dryer\Komline Dryer Operator Log Sheets.xlsx

APPENDIX 4 – DRYER START-UP PROCEDURES

5 Operation

A Manual Start-Up / Initial Start-up

Prior to commissioning the equipment, all items on the paddle dryer pre-commissioning check list and the auxiliary equipment checkout list, beginning on page 3 - 12 of this manual, must be completed and this document signed by all parties listed on the last page. Upon pre-commissioning, each equipment item can then be started manually, on operator command. Proper operation of each step in the start up sequence should be verified before proceeding to automatic start up using the Dryer PLC.

Operators should also refer to the Operation and Maintenance Manuals included for the other dryer system components for proper start up and operating procedures for those items.

1 Start the Dryer Off-Gas Handling and Heat Recovery System

Start the off-gas handling and heat recovery system per the following sequence:

- Start Utility Air Compressor and Air Dryer.
- Open FV-7012 to supply non potable water to the product handling system and to Thermal Fluid Cooler HE-01.
- Open FV-7010 to direct the non potable water to Spray Tower Condenser STC-2
- Operator to select Heat Recovery Pump HRP-1 or HRP-2. Start Heat Recovery Pump.
- Confirm the ammonia scrubber blower is operating (furnished by others).

Heat Recovery Condenser STC-1 water supply valve SV-5004 is controlled by pressure transmitter PIT-5005 which monitors water level in the condenser. At a low level set point, SV-5004 will open to introduce additional water into the condenser. At low-low level set point, the selected heat recovery pump will automatically shut down.

Valve SV-5004 is also controlled by temperature transmitter TT-5002 located in the condenser drain piping which monitors and controls the temperature of the drain water exiting the heat recovery condenser. If the temperature of the drain water exceeds a high set point, SV-5004 will automatically open to introduce additional water through a dedicated spray nozzle into the heat recovery condenser to cool the drain water.

Heat Recovery Strainer Backwash Waste Valve FV-5011 is opened by a high differential pressure indicator/switch PDI/PSH-5009B located at the heat recovery strainer to flush debris from the strainer. A high-high differential pressure condition in the heat recovery strainer will signal an alarm at the Dryer Control Panel.

The heat recovery pump in service will always be running. It will operate at two speeds, depending upon whether or not a heat exchanger is out of service. System controls will indicate if the heat exchanger is out of service (both automatic supply isolation and bypass valves are closed), and adjust the heat recovery pump flow accordingly.

Warning: The heat exchanger manual return isolation valve should not be closed unless the other two exchanger automatic valves are ciosed so as not to "dead head" the heat recovery pump.

All interlocked alarms must be acknowledged and reset prior to continuing to the next step.

2 Start the Dry Product Handling System

Start all transport and conveying equipment downstream of the dryer. Equipment should be started in reverse order per the following sequence:

- Start the Dry Biosolids Transfer Conveyor (provided by others).
- Start Rotary Valve RV-2.
- Start Screening Return Conveyor CV-3.
- Start Cooling Conveyor CV-2. Open Cooling Conveyor Water Supply Valve SV-4012.
- Start Screener SCR-1.
- Start Cooling Conveyor CV-1. Open Cooling Conveyor Water Supply Valve SV-4011.
- Start Dryer Discharge Rotary Valve, RV-1.

All interlocked alarms must be acknowledged and reset prior to continuing to the next step.

3 Start the Thermal Fluid Heating System

Operator to select thermal fluid heater HTR-1 or HTR-2.

Operator to select fuel supply, biogas or propane. Biogas is the primary fuel source.

Set thermal fluid supply temperature. Normal fluid supply temperature is 385 degrees F.

Start the thermal fluid recirculation pump. Observe operation for a few minutes to confirm no problems exist.

Start combustion air blower.

If biogas is selected, operator to select Gas Booster System No. 1 or No. 2. Open Biogas Valve FV-7117.

Start the Thermal Fluid Heater burner and slowly increase the heating medium temperature. Raise the temperature of thermal fluid in small steps limiting the temperature rise to 100 °F (or less) per 30 minute intervals. The final thermal fluid supply temperature set point will be established during commissioning, initial operation, and experience.

All interlocked alarms must be acknowledged and reset prior to continuing to the next step.

4 Start the K-S Paddle Dryer

Open control valve SV-3017 and confirm compressed air is being supplied to the dryer shaft seals.

Set the over flow side weir on the dryer to the desired position.

Start the dryer reducer cooling fan.

When the thermal fluid temperature reaches 180°F, start agitator rotation.

All interlocked alarms must be acknowledged and reset prior to continuing to the next step.

5 Start Wet Feed to the Dryer

- Confirm Biosolids Belt Conveyor No.3 is operating (provided by others).
- Confirm that position of Diverter Gate No. 2 is directing flow of material to Biosolids Belt Conveyor No.3. Diverter Gate No. 2 and Diverter Gate Control Panel is provided by others.
- Confirm Biosolids Belt Conveyor No. 2 is operating (provided by others).

When the thermal fluid temperature reaches 215°F, start the Sludge Discharge Conveyors No. 1 and No. 2 (live bottom) located in Dryer Feed Hopper H-1. Operator to also select Sludge Feed Progressive Cavity Pump PCP-1 or PCP-2 and start the pump. The pump speed will be established during commissioning, initial operation, and experience.

6 "Seeding" the K-S Paddle Dryer

For the initial start-up or in cases where the dryer bed was previously emptied, it is recommended to "seed" the dryer bed and fill the space above the slide plate with dry product. This is done to prevent semi-wet material from filling this space as this could plug the slide plate.

To seed, feed the dryer at 50% design rate for approximately 20 minutes and then stop feed for 20 minutes, allowing the material in the dryer to dry. Repeat this process a minimum of three times.

B Continuous Operation of the Drying System

1 Automatic Start-up Sequence.

When the Automatic Start-up Sequence is activated, the equipment will start automatically and proceed in the sequence graphically displayed in the Drying System Start-up Sequence shown on page page 5 - 36.

When using the Automatic Start-up Sequence, all motors must be in auto mode. If any motor is in manual mode, the Automatic Start-up Sequence will issue a fault alarm.

All alarmed interlocks must be acknowledged and reset for the Automatic Start-up Sequence to be completed. Any unresolved alarmed interlock will abort the Automatic Start-up Sequence.

If some of the equipment is already in operation, such as the thermal fluid pump, the Automated Start-up Sequence will acknowledge the equipment is ON and proceed to the next step in the start-up sequence. For this to occur, equipment that is ON must be in AUTO mode.

APPENDIX 5 – BIOSOLIDS SAMPLING PLAN

Harrisonburg-Rockingham Regional Sewer Authority

North River Wastewater Treatment Facility

Biosolids Sampling Plan

February 2020

Prepared by

MATERIAL MATTERS, Inc.

Table of Contents

Section Page
1.0 Introduction 1
2.0 WWTF Process Description 1
3.0 Biosolids Monitoring Frequency 4
4.0 Biosolids Sampling and Monitoring Procedures 4
4.1 Pollutants 4
4.2 Pathogen Reduction 5
4.2.1 Percent Total Solids 5
4.2.2 Temperature 5
4.2.3 Fecal Coliform 6
4.3 Vector Attraction Reduction 7
5.0 Procedures and Compliance Considerations 7

Figures

Figure 1. North River Wastewater Treatment Facility (WWTF) Process Flow Schematic 3

Copyright 2020 Material Matters, Inc. All rights reserved. Unauthorized use of this material is prohibited.

1.0 Introduction

The Harrisonburg-Rockingham Regional Sewer Authority has developed the Biosolids Sampling Plan for the North River Wastewater Treatment Facility (WWTF) as part of its operations under the Virginia Department of Environmental Quality (VDEQ) Virginia Pollution Abatement Permit for Distribution and Marketing of EQ Biosolids. The intent of the Biosolids Sampling Plan is to ensure compliance with the applicable pollutant limits (9VAC 25-32-356); Pathogen Reduction (PR) requirements (9VAC 25-32-675); and Vector Attraction Reduction (VAR) requirements (9VAC 25-32-685). The Plan is composed of four sections:

- WWTF process description;
- Biosolids monitoring frequency;
- Biosolids sampling and monitoring procedures; and
- Procedures and compliance considerations.

2.0 WWTF Process Description

The North River WWTF is owned and operated by the Harrisonburg -Rockingham Regional Sewer Authority (HRRSA). The facility operates under VPDES Permit VA0060640 and discharges treated effluent into the North River. A Process Flow Schematic is presented in *Figure 1*.

Principal components of the treatment system include:

- Screenings removal;
- Grit removal;
- Primary clarification;
- Activated sludge bioreactors:
- Chemical/biological phosphorus removal
- Secondary clarification;
- Tertiary filtration;
- Sodium hypochlorite disinfection; and
- Post Aeration.

The principle components of the solids handling and treatment system include:

- Fermentation of primary solids;
- Gravity belt thickening of waste activated solids (WAS);
- Mesophilic anaerobic digestion of hauled waste, primary solids, and WAS;
- Dewatering via a screw press or BFP;
- Thermal drying;
- On-site storage; and
- Beneficial use.

Copyright 2020 Material Matters, Inc. All rights reserved. Unauthorized use of this material is prohibited.

Solids generated in the primary clarifiers are either pumped to a fermenter tank or directly into high-rate mesophilic anaerobic digesters. Primary solids are typically 0.6 to 1.2% total solids (TS). Waste activated solids (WAS) generated in the bioreactors are pumped to a holding tank, thickened in gravity belt thickeners, and pumped to a second holding tank. Thickened WAS solids are typically 3-4% TS. Thickened WAS are transferred from the thickeners to primary anaerobic digesters. The solids are stabilized through a high-rate mesophilic anaerobic digestion process. The primary digesters provide between 49 and 63% volatile solids reduction. After digestion, the stabilized solids are dewatered by a screw press and/or belt filter press. Emulsion polymer is added as a coagulating agent just prior to solids introduction into the dewatering units. Dewatered solids achieve and average of 17.5% TS. Dewatered solids are transported to a temporary storage hopper and then pumped into a Komline-Sanderson indirect thermal dryer.

The Komline-Sanderson dryer utilizes heated oil as a thermal transfer medium and a high degree of mechanical agitation to enhance contact with the product. Product enters the dryer and is moved through the dryer by displacement. Heat from the hot oil is transferred to the product by revolving wedge-shaped paddles in a continuous process; the slanting surfaces of the wedge-shaped paddles generates shearing forces, which clean the paddle surfaces and maximize conductivity. Product is mixed and transported through the dryer continuously and is discharged onto two cooling screws. Dried product is screened to remove fines (~<1 mm) and overs (~>9.5 mm); the screenings are recirculated back to the head of the dryer and mixed with the dewatered cake entering the dryer. The final screened dried product is transported onto the covered storage pad.

The dryer will typically be operated 24 hours per day, 7 days per week except for times when the dryer is undergoing routine maintenance (anticipated to be 3-4 consecutive days per month) or emergency maintenance. The dryer has capacity to produce 7 to 10 DMT of biosolids each day the dryer is operated.

On occasions when dryer capacity cannot process the entire solids volume, or when solids are processed through the dryer and the dryer temperature drops below 220° F (105° C), Class B biosolids are produced. Additional information pertaining to temperature monitoring and fail-safes are found in section *4.2.2 Temperature*. The biosolids cake is diverted to a segregated area on the covered storage pad at the WWTF until transport to land application is available.

Copyright 2020 Material Matters, Inc. All rights reserved. Unauthorized use of this material is prohibited.

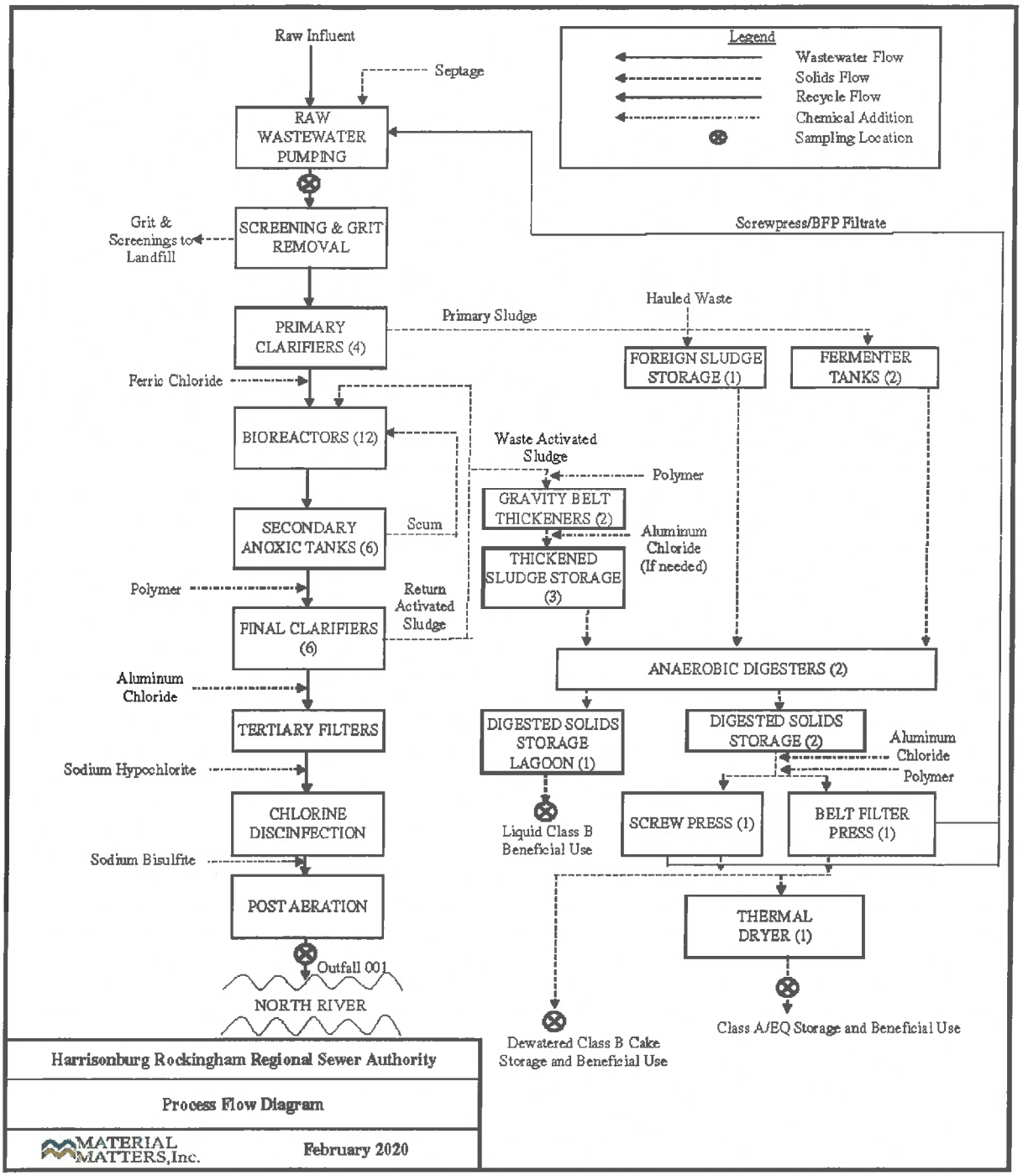

Figure 1. North River Wastewater Treatment Facility (WWTF) Process Flow Schematic

Copyright 2020 Material Matters, Inc. All rights reserved. Unauthorized use of this material is prohibited.

3.0 Biosolids Monitoring Frequency

In accordance with Title 9 of the Virginia Administrative Code 25-32-358, facilities land applying between 1,500 and 15,000 dry metric tons (DMT) per year are required to monitor biosolids pollutants once per 60 days (6 times per year). The North River WWTF produced approximately 2,341 dry metric tons in 2019; therefore, HRRSA is required to analyze the North River WWTF biosolids at least once per 60 days. To show compliance with EQ requirements, data for parameters are evaluated based on the following:

- Pollutant data from one or more 60-day monitoring event(s);
- The fecal coliform results from sample(s) collected from one or more 60-day monitoring event(s);
- Temperature data from the Komline-Sanderson thermal dryer collected and recorded daily; and
- Percent total solids of the dried product from the Komline-Sanderson thermal dryer monitored daily (for process control) and bi-monthly (for compliance).

4.0 Biosolids Sampling and Monitoring Procedures

Biosolids monitoring for pollutants is performed on thermally dried EQ biosolids. Monitoring for PR and VAR is performed on the dried EQ biosolids and is based on dryer temperature data and dried biosolids samples collected immediately following thermal drying. Appropriate containers, preservation methods, and chain-of-custody paperwork protocol, in accordance with 40 CFR Part 136, is observed at all times. The biosolids sampling methods and analytical protocols for each of the three parameters are summarized below.

4.1 Pollutants

Pollutant requirements are satisfied in accordance with the criteria under 9VAC 25-32-35. Biosolids monitoring for pollutants is performed on thermally dried biosolids at least one time per 60 days. One representative sample, consisting of a composite of at least seven grab samples, is collected from the biosolids stored in the on-site covered storage pad. Grab samples are collected at varying depths and locations throughout the pile to ensure that a representative sample is analyzed. A spade, shovel, or auger is used to reach the desired sampling depth. Each grab sample is collected using a clean, stainless steel spoon or utensil, and placed in a clean, stainless steel tray or glass tray for compositing.

After all grab samples are collected, the samples are thoroughly mixed in the stainless-steel tray or glass tray, and a portion of the sample is removed and placed into a laboratory-approved sampling container, cooled to 4 °C, and sent to a contract laboratory (currently Waypoint Analytical laboratory) immediately for analysis, accompanied by a chain of custody. The analysis for each composite sample sent to the contract laboratory is conducted within the specified holding times using 40 CFR Part 136 methods and analyzed for regulated pollutants and nutrients. Results of the analyses show that all pollutants are well below the VDEQ Pollutant Concentration Limits

Copyright 2020 Material Matters, Inc. All rights reserved. Unauthorized use of this material is prohibited.

on a consistent basis. Compliance with Pollutant Concentration Limits for EQ biosolids is based on the monthly average for each pollutant on an annual basis.

Table 1 - VDEQ Pollutant Concentration Limits (Monthly Average)

Pollutant Concentration Limits – Monthly Average	
Pollutant	Pollutant Concentration Limits (mg/kg) [1]
Arsenic	41
Cadmium	39
Copper	1,500
Lead	300
Mercury	17
Molybdenum	75[2]
Nickel	420
Selenium	100
Zinc	2,800
[1] Dry weight basis [2] Ceiling concentration limit	

4.2 Pathogen Reduction

Pathogen Reduction (PR) requirements are satisfied in accordance with the criteria under Title 9 of the Virginia Administrative Code 25-32-675 (A)(7) [Class A - Alternative 5]. Solids are dried to reduce the moisture content of the solids to 10% or lower, and the temperature of sewage sludge particles exceeds 176° F (80 °C). Additionally, the density of fecal coliform in the sewage sludge will be less than 1,000 colony forming units per gram of total solids (dry weight basis).

4.2.1 Percent Total Solids

Samples are generally collected and analyzed for total solids daily, when the dryer is in operation. One grab sample is collected at the dryer discharge (at a sampling port following the screening equipment on cooling conveyor 2) prior to discharge into the storage area. The grab sample, collected in a 500 ml graduated cylinder, is transported to the HRRSA laboratory where it is tested with standard method S2540G-11. Note that the daily grab sample is tested for in-house operational control only and is not used for compliance purposes. Total solids testing is also conducted on the samples collected during each bi-monthly monitoring period for pollutant and fecal coliform testing by an accredited laboratory (currently Waypoint Analytical Laboratory [Waypoint] and Pace Analytical Laboratory [Pace]).

4.2.2 Temperature

The Komline-Sanderson dryer uses thermocouples (Types J and K) measurement systems to monitor the temperature of the dryer. Thermocouples are sensors that use two different metals

Copyright 2020 Material Matters, Inc. All rights reserved. Unauthorized use of this material is prohibited.

(e.g. conductors) to produce a voltage that can be read to determine the local temperature. The thermocouple instrument relies on a reference temperature at the "reference junction" to determine the actual hot-junction temperature; here, the output voltage of the thermocouple must be compensated to account for the voltage created by a nonzero cold-junction temperature. The thermocouple and meter make up a system of measurement equipment:

- Milliamp/millivolt meter
- Reference junction (e.g. cold junction compensation), comprised of an on-board temperature sensor (perhaps RTD or thermistor), which tells us the temperature of the terminals where the thermocouple is plugged into the "meter."
- Thermocouple, which is two wires of different metals (e.g. copper and constantan alloy, Type T) connected at the sensing point.

Temperature is manually recorded at least once every 4 hours. (Note: Temperature will be monitored electronically once it is incorporated into the SCADA system by a contractor in 2020). A fixed thermocouple is also located close to the outlet of the dryer before the overflow weir. The thermocouple is in direct contact with product exiting the dryer (Zone/Bed 4) and the temperature of the product is recorded in a logbook. The temperature at the discharge end of the dryer (Zone 4) will be maintained between 230°F and 250°F with 240°F being the target. If the temperature drops to 235°F, the discharge weir level is raised until the temperature recovers; normally adjusting the weir will increase the temperature adequately to meet the target temperature reading. However, if raising the weir does not increase the temperature sufficiently, then the setpoint on the Thermal Fluid Heaters is increased by 2°F. If additional action is required to increase the dryer temperature, the feed rate to the dryer is reduced by 2 Hz. If the discharge temperature in Zone 4 falls below 230°F, the weir will be raised to prevent the discharge of solids until the temperature adjusts back to 235°F.

If solids discharge cannot be stopped, then segregate the solids discharged (during the time period the temperature was below 230°F) into a separate pile (normally Bay #5). This material will be considered Class B and will be transported to the landfill or used in land application.

4.2.3 Fecal Coliform

Samples for fecal coliform monitoring are collected as a grab samples. Seven (7) grab samples, collected at least 15 minutes apart, are collected aseptically at the sampling port following the screening equipment on cooling conveyor 2 prior to discharge into the storage area. The samples are placed into clean sample containers, labeled, cooled to 4°C, and shipped to a VELAP-accredited contract laboratory (currently Pace) immediately for analysis, accompanied by a chain of custody. The analysis for each sample sent to the Laboratory is conducted within the specified holding times in accordance with 40 CFR Part 136 methods. The analytical method used by the laboratory is SM 9222-D.

Copyright 2020 Material Matters, Inc. All rights reserved. Unauthorized use of this material is prohibited.

4.3 Vector Attraction Reduction

Vector Attraction Reduction (VAR) requirements are achieved through thermal drying and are satisfied in accordance with the criteria under Title 9 of the Virginia Administrative Code 25-32-685 [Option 7]. Option 7 requires the percent solids of sewage sludge that contains stabilized solids generated in a primary wastewater treatment process to be equal to or greater than 75% based on the moisture content and total solids prior to mixing with other materials. See Section *4.2.1 Percent Total Solids* for further information on %TS testing.

5.0 Procedures and Compliance Considerations

Should any data collected for regulatory compliance (including temperature and/or laboratory analytical data), not meet the regulatory requirements, the following steps will be taken.

5.1 Temperature Data

When biosolids do not meet the minimum temperature required to meet Class A pathogen reduction standards, biosolids will be segregated in accordance with the protocol identified in *Section 4.2.2* and treated as Class B biosolids until the HRRSA confirms compliance with Class A temperature requirements.

5.2 Analytical Data

Should laboratory analytical data (including %TS and pollutant data) not meet the regulatory requirements, the staff will first review in-house data or contact the contract lab to determine if there was a reporting error. If this is not the case, a second sample will be collected and submitted for re-analysis. If the re-analyzed sample still does not meet regulatory requirements, HRRSA staff will discontinue distribution under the EQ permit until compliance is re-established.

Copyright 2020 Material Matters, Inc. All rights reserved. Unauthorized use of this material is prohibited.

APPENDIX 6 – PROPOSED LABEL/BROCHURE

Please Note: HRRSA is simultaneously submitting an application to VDACS for approval of HRRSA's EQ biosolids as a fertilizer. The attached label is a proposed draft, and HRRSA will work closely with VDACS to finalize the label during the fertilizer approval process.

Harrisonburg-Rockingham Regional Sewer Authority

EQ BIOSOLIDS

6 - 7 - 0

Guaranteed Minimum	
Total Nitrogen	6%
Available Phosphate	7%
Soluble Potash	0%

DRAFT

RECOMMENDATIONS FOR USE

HRRSA EQ BIOSOLIDS may be used for the production of agronomic crops, such as corn or small grains. It may also be used for the establishment and/or maintenance of turf grass, lawns, and mechanically harvested forage grass, and for flower gardens, and potted plants. Application of ***HRRSA EQ BIOSOLIDS*** to the land is prohibited except in accordance with the instructions on this label.

APPLICATION RATES

BULK AGRICULTURAL USE: HRRSA EQ BIOSOLIDS contain both nitrogen (N) and phosphorus (P); application rates should be based on cropping information supplied by the farmer, land manager, or gardener, and the nutrient needs of the specific crop. The sum total of all N and P sources should not exceed the rates detailed in your nutrient management plan. Typical application rates, based on the plant available nitrogen (PAN) contributed by biosolids, are shown in Table 1.

Planned Crop	Projected Crop Yield	Total Crop N Requirement (lb./Ac)	EQ Biosolids Application Rate Ton/Ac)
Corn, grain (bu/ac)	150	165	4
Corn, silage (T/ac)	20	153	3.5
Soybean (bu/ac)	40	150	3.5
Wheat/Rye (bu/ac)	60	75	1.5
Grass Hay (T/ac)	80	210	5

(1) The rates provided are based on N uptake and do not reflect historic nutrient applications or application based on P application rates

The annual application rate of HRRSA biosolids shall not cause any of the annual pollutant loading rates in Table 5 of 9VAC25-32-356 to be exceeded based on the metals concentration found in Table 2.

Parameter[1]	Accepted [2] Concentration (mg/kg)	Maximum Concentration (mg/kg)
Metals/PCBs:		
Arsenic	41	2.4
Cadmium	39	2.3
Copper	1,500	330
Lead	300	9.4
Mercury	17	0.21
Molybdenum	75	10.9
Nickel	420	19.3
Selenium	100	3.3
Zinc	2,800	570

TURF AND GENERAL USE: Apply three (3) bi-monthly applications of 50 lbs per 1,000 square feet to apply 1 lb of plant-available N per 1,000 square feet per year.

STORAGE AND TRANSPORT

HRRSA EQ BIOSOLIDS can then be transported and applied, or stored and later applied at farm sites, lawns, residential areas, sports fields, flower gardens, and many other applications. It is suggested that ***HRRSA EQ BIOSOLIDS*** be covered and stored within designated areas until conditions are suitable for application (within 6 months).

SEE NEXT PAGE FOR USE LIMITATIONS

USE LIMITATIONS

Because the ***HRRSA EQ BIOSOLIDS*** meets the EQ pollutant limits, Class A pathogen, and vector reduction standards, it can be applied nearly anywhere. ***HRRSA EQ BIOSOLIDS*** should be used in a way to avoid potential environmental impact, in accordance with the following conditions:

- Do not apply near water, storm drains, or drainage ditches
- Do not apply if heavy rain is expected or if the ground is saturated (immediately following a rainstorm).
- Do not apply when the ground is frozen deeper than 2 inches.
- Do not apply when the ground is snow covered.
- For lawn applications, apply this product only to your lawn/garden, and sweep any product that lands on the driveway, sidewalk, or street, back onto your lawn/garden.

DRAFT

Fecal Split Samples		
Date	**Air, Water & Soil Labs (SM 9221E C-2006)**	**Pace Labs (SM 9222D-2006)**
4/22/2020	< 1 MPN/g	< 1000 CFU/g
4/27/2020	< 1 MPN/g	< 1000 CFU/g
4/29/2020	< 1 MPN/g	< 1000 CFU/g
5/6/2020	< 1 MPN/g	< 1000 CFU/g
5/11/2020	< 1 MPN/g	< 11 CFU/g
5/13/2020	< 1 MPN/g	< 11 CFU/g
5/18/2020	< 1 MPN/g	< 11 CFU/g

Commonwealth of Virginia

Wood, Christina <christina.wood@deq.virginia.gov>

HRRSA VPA Permit Application

sfoley@hrrsa.org <sfoley@hrrsa.org> Mon, Apr 13, 2020 at 11:31 AM
To: "Wood, Christina" <christina.wood@deq.virginia.gov>
Cc: Zahradka Neil ona29584 <neil.zahradka@deq.virginia.gov>, HRRSA <abarnett@hrrsa.org>, Anita Riggleman <ariggleman@hrrsa.org>

Dear Christina,

Thank you for your comments. Below in red are HRRSA's responses to your questions. Please confirm receipt and let me know if this electronic response is satisfactory.

Regards,
Sharon

Sharon G. Foley, P.E.

Executive Director

Harrisonburg-Rockingham Regional Sewer Authority

P.O. Box 8

Mt. Crawford, VA 22841

HRRSA Responses 4/13/2020):

1. The membrane filter method, 9222 D, being used for fecal coliform is not allowed for class A biosolids. The regulation specifically states that the density of fecal coliform in the biosolids shall be less than *1,000 Most Probable Number per gram of total solids*. "Most Probable Number" (MPN) is the unit of measure for a specific method - the Multiple Tube Fermentation method. HRRSA's results were reported in cfu/gram (colony forming units/gram), which is the result of the membrane filtration method, which is not as accurate as MPN. The lab was using a detection level of 1,000 cfu/g; for Multiple Tube Fermentation the DL is usually around 10 MPN or lower for class A biosolids. (While this is the required method, having a low detection level will also allow you to track any problems and catch increases in fecal coliform density before the biosolids are out of compliance.) See below for the VPA regulation regarding Class A pathogen reduction and 40 CFR part 136 fecal coliform methods for biosolids. EPA Method 1680 or 1681 are the preferred methods, and both are approved for sewage sludges. 1680 is based on SM9221 C E, but it also includes procedures specific to biosolids and addresses the preparation of the biosolids samples.

Rather than doing the whole demonstration again, I would propose that you collect 7 grab samples over a 2 week period, each at least 1 day apart, as is the standard recommended sampling scheme for biosolids. Have the lab split the samples for side-by-side analyses using the Multiple Tube Fermentation method and the membrane filtration method, as a way to validate the demonstration results.

If you would prefer, you may conduct this mini-demonstration after the permit has been issued and the VDACS registration is complete. After the 2 weeks of sampling is complete and the results are all in, if all samples are <1,000 MPN/gram, I will approve the biosolids for distribution and then those sample analyses can also be used as your routine monitoring for the period.

HRRSA Response: Neither of the contract laboratory we have used for biosolids testing perform the multiple tube fermentation method. Last week we found a laboratory in the Richmond area – Air, Water and Soil, that is certified to perform this analysis. We would accept your proposal to collect 7 additional grab samples each at least 1 day apart with the sample split between Air, Water & Soil (multiple tube fermentation) and Pace (membrane filter method) but request the samples be collected over 21 days instead of two weeks due to sampling logistics (the multiple tube fermentation method samples have an 8 hour maximum hold time; and a one day incubation period that would require some of the samples to be analyzed over the weekend. Air Soil & Water does not work weekends. The additional week would allow us to work within their current laboratory operating schedule. Please advise if this change is acceptable.

2. Would you please analyze one sample for PCBs. The sample that we have on file is over 5 years old. Method SW-846 8082 is acceptable, we do not need to low level analysis.

HRRSA Response: Please see attached results.

3. Would you please send me the Biosolids Demonstration Period Monitoring spreadsheet in Excel format? I reviewed the COAs, but I cannot read the pdf of the spreadsheet – it was reduced so much that when I zoom in to read it, it just pixelates.

HRRSA Response: The requested spreadsheet is attached.

4. Would you please provide some basic information on the dryer itself - a diagram, the model, etc. Show on the diagram where the thermocouples are located.

HRRSA Response: The requested diagram is attached with the thermocouple locations highlighted in yellow.

5. Also, what is the status of the VDACS registration?

HRRSA Response: The application has been drafted. We are awaiting the results of the priority pollutant scan which we anticipating receiving later this week. Shall we submit that while we await the VPA permit issue?

[Quoted text hidden]
[Quoted text hidden]
[Quoted text hidden]

Mailing Address:
P.O. Box 1105
Richmond, VA 23218
christina.wood@deq.virginia.gov
Virginia DEQ - Virginia Pollution Abatement Permit Program

On Tue, Mar 31, 2020 at 10:28 AM Wood, Christina <christina.wood@deq.virginia.gov> wrote:

> Good morning Sharon,
>
> I apologize for the delay. I am looking at it right now. I will let you know if I have any questions or need additional information as soon as I have completed the review.
>
> Take care,
>
> Christina M. Wood
> Biosolids Guidance and Regulation Coordinator
> VADEQ - Water Division
> 1111 East Main Street, Suite 1400
> Richmond, Virginia 23219
> (804)698-4263
>
> Mailing Address:
> P.O. Box 1105
> Richmond, VA 23218
> christina.wood@deq.virginia.gov
> Virginia DEQ - Virginia Pollution Abatement Permit Program

[Quoted text hidden]

3 attachments

HRRSA Biosolids PCB 2020.pdf
474K

Copy of Class_A_Demonstration_Monitoring (Rev. 10-08-2019) (002).xlsx
35K

Dryer Drawing.pdf
109K

7621 Whitepine Road, Richmond, VA 23237
Main 804-743-9401 º Fax 804-271-6446
www.waypointanalytical.com

4/10/2020

Harrisonburg Rockingham Reg Sewer Authority
Anita Rigglemann
856 North River Road
Mt Crawford, VA, 22841

Ref: Analytical Testing
Report Number: 20-098-0003
Project Description: DB040620

Dear Anita Rigglemann:
Waypoint Analytical Virginia, Inc. received sample(s) on 4/7/2020 for the analyses presented in the following report.

The above referenced project has been analyzed per your instructions. The analyses were performed in accordance with the applicable analytical method. Sub-contracted testing is noted on the Sample Summary Table if applicable.

The analytical data has been validated using standard quality control measures performed as required by the analytical method. Quality Assurance, method validations, instrumentation maintenance and calibration for all parameters (NELAP and non-NELAP) were performed in accordance with guidelines established by the USEPA (including 40 CFR 136 Method Update Rule May 2012) and NELAC unless otherwise indicated.

Certain parameters (chlorine, pH, dissolved oxygen, sulfite...) are required to be analyzed within 15 minutes of sampling. Usually, but not always, any field parameter analyzed at the laboratory is outside of this holding time. Refer to sample analysis time for confirmation of holding time compliance.

The results are shown on the attached Report of Analysis(s). Results for solid matrices are reported on an as-received basis unless otherwise indicated. This report shall not be reproduced except in full and relates only to the samples included in this report.

Please do not hesitate to contact me or client services if you have any questions or need additional information.

Sincerely,

Pauric McGroary
Agronomist

Laboratory's liability in any claim relating to analyses performed shall be limited to, at laboratory's option, repeating the analysis in question at laboratory's expense, or the refund of the charges paid for performance of said analysis.

7621 Whitepine Road, Richmond, VA 23237
Main 804-743-9401 ° Fax 804-271-6446
www.waypointanalytical.com

Sample Summary Table

Report Number: **20-098-0003**

Client Project Description: **DB040620**

Lab No	Client Sample ID	Matrix	Date Collected	Date Received	Method	Lab ID
70979	DB040620	Solids	04/06/2020 11:00	04/07/2020	8082	WP MTN -
70979	DB040620	Solids	04/06/2020 11:00	04/07/2020	SM-2540G	WP MTN -

WP MTN - Memphis, TN: Waypoint Analytical - TN, Memphis, TN

Waypoint ANALYTICAL
7621 Whitepine Road, Richmond, VA 23237
Main 804-743-9401 ° Fax 804-271-6446
www.waypointanalytical.com

70800
Harrisonburg Rockingham Reg Sewer Authority
Anita Rigglemann
856 North River Road
Mt Crawford , VA 22841

Project Information : Aaron Barnett
DB040620

Report Date : 04/10/2020
Received : 04/07/2020

Pauric McGroary

Submitted By : Aaron Barnett
Report Number : **20-098-0003**

REPORT OF ANALYSIS

Pauric McGroary
Agronomist

Lab No : **70979**
Sample ID : **DB040620**

Matrix: **Solids**
Sampled: **4/6/2020 11:00**

Test	Results	Units	MQL	DF	Date / Time Analyzed	By	Analytical Method
Moisture	**6.21**	%	0.010	1	04/08/20 16:28	ADM	SM-2540G

Test	Results	Units	MQL	DF	Date / Time Analyzed	By	Analytical Method
Total Solids	**93.8**	%	0.010	1	04/08/20 16:28	ADM	SM-2540G

Analytical Method: 8082 **Prep Batch(es):** **L486448** 04/09/20 12:56
Prep Method: 3546

Test	Results	Units	MQL	DF	Date / Time Analyzed	By	Analytical Batch	
Aroclor 1016	<0.107	mg/Kg - dry	0.107	1	04/09/20 18:05	VIC	L486458	~
Aroclor 1221	<0.107	mg/Kg - dry	0.107	1	04/09/20 18:05	VIC	L486458	~
Aroclor 1232	<0.107	mg/Kg - dry	0.107	1	04/09/20 18:05	VIC	L486458	~
Aroclor 1242	<0.107	mg/Kg - dry	0.107	1	04/09/20 18:05	VIC	L486458	~
Aroclor 1248	<0.107	mg/Kg - dry	0.107	1	04/09/20 18:05	VIC	L486458	~
Aroclor 1254	<0.107	mg/Kg - dry	0.107	1	04/09/20 18:05	VIC	L486458	~
Aroclor 1260	<0.107	mg/Kg - dry	0.107	1	04/09/20 18:05	VIC	L486458	~
Surrogate: Decachlorobiphenyl	64.7		Limits: 25-125%	1	04/09/20 18:05	VIC	L486458	
Surrogate: Tetrachloro-m-xylene	60.7		Limits: 25-125%	1	04/09/20 18:05	VIC	L486458	

Qualifiers/ Definitions DF Dilution Factor MQL Method Quantitation Limit

7621 Whitepine Road, Richmond, VA 23237
Main 804-743-9401 º Fax 804-271-6446
www.waypointanalytical.com

Client: Harrisonburg Rockingham Reg Sewer Authority **CASE NARRATIVE**
Project: DB040620
Lab Report Number: 20-098-0003
Date: 4/10/2020

High Temp/Pressure Extraction for PCB's Method 3546
Sample 70979 (DB040620)
QC Batch No: L486448/L486448
The weight/volume extracted was reduced during the extraction procedure due to the nature of the sample. Reporting limits are factored for the sample size reduction.

Waypoint ANALYTICAL
7621 Whitepine Road, Richmond, VA 23237
Main 804-743-9401 º Fax 804-271-6446
www.waypointanalytical.com

Shipment Receipt Form

Customer Number: **70800**
Customer Name: **Harrisonburg Rockingham Reg Sewer Authority**
Report Number: **20-098-0003**

Shipping Method

● Fed Ex ○ US Postal ○ Lab ○ Other :
○ UPS ○ Client ○ Courier Thermometer ID:

Shipping container/cooler uncompromised?	● Yes	○ No	
Number of coolers/boxes received	1		
Custody seals intact on shipping container/cooler?	○ Yes	○ No	● Not Present
Custody seals intact on sample bottles?	○ Yes	○ No	● Not Present
Chain of Custody (COC) present?	● Yes	○ No	
COC agrees with sample label(s)?	● Yes	○ No	
COC properly completed	● Yes	○ No	
Samples in proper containers?	● Yes	○ No	
Sample containers intact?	● Yes	○ No	
Sufficient sample volume for indicated test(s)?	● Yes	○ No	
All samples received within holding time?	● Yes	○ No	
Cooler temperature in compliance?	● Yes	○ No	
Cooler/Samples arrived at the laboratory on ice. Samples were considered acceptable as cooling process had begun.	● Yes	○ No	
Water - Sample containers properly preserved	○ Yes	○ No	● N/A
Water - VOA vials free of headspace	○ Yes	○ No	● N/A
Trip Blanks received with VOAs	○ Yes	○ No	● N/A
Soil VOA method 5035 – compliance criteria met	○ Yes	○ No	● N/A

☐ High concentration container (48 hr) ☐ Low concentration EnCore samplers (48 hr)
☐ High concentration pre-weighed (methanol -14 d) ☐ Low conc pre-weighed vials (Sod Bis -14 d)

Special precautions or instructions included? ○ Yes ● No

Comments:

Signature: Brandi Watson Date & Time: 04/07/2020 12:48:01

SAMPLE TRANSMITTA

Waypoint

7621 Whitepine Road Richmond VA 23237 Tel: 804-743-940

Harrisonburg Rockingham Reg Sewer Authority
DB040620

20-098-0003
70800
04-07-2020
12:17:13

Account #
70800

Customer Information

Submitted By	Charge To	Copy To
Aaron Barnett	P.O. # 30176	

Project		Phone: 540-434-1053	Fax:	E-mail: abarnett@hrrsa.org

Sample Information

Sample ID	Lab Number (Lab Use Only)	Collection Information: Type	Date	Time	Container Information: Number of Bottles	Type	Volume	SL1	SL2	503 Metals	Nitrogen Series	pH	CCE	Ag	Cl	Volatile Solids	Others
DB040620		___ Grab ✓ Composite	04/06/20	11:00	1	X Glass ___ Plastic	___ oz ___ pint ___ qt										PCB*
	70979	___ Grab ___ Composite				___ Glass ___ Plastic	___ oz ___ pint ___ qt										
		___ Grab ___ Composite				___ Glass ___ Plastic	___ oz ___ pint ___ qt										
		___ Grab ___ Composite				___ Glass ___ Plastic	___ oz ___ pint ___ qt										

Relinquished By: (Signature)	Date	Time	Received By: (Signature)	Date	Time
A Bett	04/06/20	13:30	FedEx	04/06/20	14:00
FedEx	4/7/20				

Test Package Details

SL1: Total Solids (Moisture), Total Kjeldahl Nitrogen, Phosphorus and Potassium
SL2: Basic Test SL1 plus Sulfur, Calcium, Magnesium, Sodium, Iron, Aluminum, Manganese, Copper and Zinc
503 Metals: Arsenic, Cadmium, Chromium, Mercury, Molybdenum, Lead, Nickel, and Selenium (Copper and Zinc included in SL2)
Nitrogen Series: Total Kjeldahl, Ammonium, Nitrate and Organic Matter
CCE: Calcium Carbonate Equivalent or Total Neutralization Value (for lime treated sludge)

Special Instructions or Remarks

* Test method SW-846 8082

Temp below 6°C

North River Wastewater Treatment Facility

CLASS A BIOSOLIDS DEMONSTRATION PERIOD MONITORING SCHEDULE

No sample/data collected

* The time shall be determined based on the minimum temperature recorded during the processing period

Thermal Dryer Start-up

Date	Daily Total Produced (Metric Wet Tons)	Weekly Total Produced (Metric Wet Tons)	Day	Week Number	FECAL MONITORING FREQUENCY	FECAL COLIFORM RESULTS (CFU/g)	%TS MONITORING FREQUENCY	HRRSA %TS FEED CAKE	HRRSA %TS RESULTS	Pace %TS RESULTS	Thermal Drying time/minimum temp*	Minimum Temp °F	Metals	Organic Compounds	Use during demonstration		Comments
14-Oct-19	46.82		1			<1000	daily	17.6	95.3	95.4	continuous	244					
15-Oct-19	48.09		2			<1000	daily	17.3	94.4	94.3	continuous	237					
16-Oct-19	39.62		3			<1000	daily	18.8	94.7	95.5	continuous	239					
17-Oct-19	46.65	315.20	4	WEEK 1	3 samples/week		daily	19.0	94.2		continuous	213			sent to on-site storage/land application	10/17/2019	Operator error allowed Min temp to drop to 213 °F
18-Oct-19	49.35		5				daily	17.5	94.9		continuous	236					
19-Oct-19	45.92		6				daily	17.6	94.9		continuous	239					
20-Oct-19	38.76		7				daily	18.6	95.1		continuous	233					
21-Oct-19	44.09		8			<1000	daily	18.6	97.6	96.7	continuous	249					
22-Oct-19	34.32		9			<1000	daily	21.0	94.3	92.7	continuous	240					
23-Oct-19	42.35		10				daily	17.8	95.3		continuous	228				10/23/2019	No discharge from dryer while below 230 °F
24-Oct-19	44.66	300.62	11	WEEK 2	3 sample/week	<1000	daily	18.0	96.0	95.1	continuous	236			sent to on-site storage/land application		
25-Oct-19	45.56		12				daily	18.0	94.9		continuous	238					
26-Oct-19	46.17		13				daily	18.3	95.2		continuous	242					
27-Oct-19	43.49		14				daily	18.4	95.7		continuous	248					
28-Oct-19	44.64		15			<1000	daily	18.0	95.1	96.4	continuous	244	1/mo				
29-Oct-19	16.40		16			<1000	daily	17.5	94.7	92.9	Midnight - 8:30 am	238				10/29/2019	Shut dryer down for punch-list items to be fixed by contractor
30-Oct-19			17				daily				OFF					10/30/2019	Dryer still shut down for maint.
31-Oct-19	25.77	234.54	18	WEEK 3	3 sample/week		daily	17.4	97.1		9:00 am - Midnight	255			sent to on-site storage/land application	10/31/2019	Started dryer back up at 9:00 am but no discharge until too late for a fecal sample
1-Nov-19	48.44		19				daily	17.1	92.5		continuous	217				11/1/2019	Operator error allowed Min temp to drop to 217 °F
2-Nov-19	45.91		20				daily	17.5	94.7		continuous	232					
3-Nov-19	53.38		21				daily	17.0	94.9		continuous	243					
4-Nov-19	48.61		22			<1000	daily	16.7	94.4	94.4	continuous	240					
5-Nov-19	50.80		23			<1000	daily	17.0	95.6	94.7	continuous	241					
6-Nov-19	42.37		24			<1000	daily	18.7	95.6	93.7	continuous	230					
7-Nov-19	45.22	311.46	25	WEEK 4	3 sample/week		daily	18.5	95.6		continuous	231			sent to on-site storage/land application		
8-Nov-19	41.20		26				daily	18.9	96.0		continuous	235					
9-Nov-19	41.42		27				daily	18.6	95.2		continuous	225				11/9/2019	Operator error allowed Min temp to drop to 225 °F
10-Nov-19	41.85		28				daily	19.0	91.9		continuous	236					
11-Nov-19	45.47		29			<1000	daily	18.4	95.2	94.3	continuous	239					
12-Nov-19	42.92		30			<1000	daily	19.3	95.0	94.5	continuous	252					
13-Nov-19	48.20		31				daily	17.7	93.6		continuous	238					
14-Nov-19	48.36	319.28	32	WEEK 5	2 samples/week		daily	17.3	93.3		continuous	219			sent to on-site storage/land application	11/14/2019	Switch from Screw Press to Belt Press caused sudden drop in temp
15-Nov-19	42.36		33				daily	17.6	95.1		continuous	245					
16-Nov-19	47.19		34				daily	17.4	94.8		continuous	245					
17-Nov-19	44.79		35				daily	17.2	95.2		continuous	250					
18-Nov-19	46.02		36			<1000	daily	17.1	94.6	92.6	continuous	249					
19-Nov-19	46.02		37				daily	17.1	94.6		continuous	246					
20-Nov-19	29.15		38				daily	17.2	94.8		10:30 am - Midnight	235				11/20/2019	Dryer shut down at 2:00 am due to pressure sensor clog. Dryer re-started back up at 10:30 am
21-Nov-19	49.32	290.76	39	WEEK 6	2 sample/week	<1000	daily	17.3	95.1	90.3	continuous	231			sent to on-site storage/land application	11/21/2019	Collected %TS and fecal sample at 231°F temp
22-Nov-19	55.05		40				daily	16.8	94.7		continuous	238					
23-Nov-19	51.83		41				daily	17.1	94.6		continuous	239		1x/demo period			
24-Nov-19	13.38		42				daily				Midnight - 6:00 am	270	1/mo			11/24/2019	Shut dryer down at 6:00 am due to fine screen conveyor clogging up
25-Nov-19	32.49		43				daily	17.4	94.8		9:30 am - Midnight	236				11/25/2019	Started dryer back up at 9:30 am
26-Nov-19	51.09		44			<1000	daily	16.7	95.7	93.8	continuous	244					
27-Nov-19	52.93		45			<1000	daily	16.9	95.5	93.0	continuous	230					
28-Nov-19	15.67	152.18	46	WEEK 7	2 sample/week		daily	17.7	93.3		Midnight - 7:45 am	235			sent to on-site storage/land application	11/28/2019	Dryer shut down at 7:45 a.m. due to conveyor issues
29-Nov-19			47				daily				OFF						
30-Nov-19			48				daily				OFF						
1-Dec-19			49				daily				OFF						
2-Dec-19	13.26		50				daily				10:30 am - 5:00 pm	254				12/2/2019	Started dryer back up but it went down again due to biogas booster system failure
3-Dec-19	26.97		51				daily	17.0	96.1		11:30 am - Midnight	255				12/3/2019	Started dryer back up at 11:30 am
4-Dec-19	48.44	279.68	52	WEEK 8	2 sample/week	<1000	daily	18.2	94.3	93.6	continuous	241			sent to on-site storage/land application		
5-Dec-19	45.97		53			<1000	daily	18.2	93.2	92.0	continuous	238					
6-Dec-19	47.40		54				daily	18.6	94.7		continuous	239					
7-Dec-19	48.92		55				daily	17.1	94.9		continuous	234					
8-Dec-19	48.72		56				daily	17.0	96.0		continuous	246					
9-Dec-19	49.70		57			<1000	daily	17.0	96.0	96.3	continuous	253					
10-Dec-19	49.21		58				daily	17.0	94.3		continuous	240					
11-Dec-19	48.72		59				daily	17.0	94.0		continuous	239					
12-Dec-19	47.79	339.43	60	WEEK 9	1 sample/week		daily	17.0	93.8		continuous	238			sent to on-site storage/land application		
13-Dec-19	48.08		61				daily	16.9	94.6		continuous	237					
14-Dec-19	47.12		62				daily	16.7	94.6		continuous	238					
15-Dec-19	48.81		63				daily	16.8	95.2		continuous	240					
16-Dec-19	48.13		64			<1000	daily	16.7	97.3	93.3	continuous	239					
17-Dec-19	53.67		65				daily	16.4	94.2		continuous	231					
18-Dec-19	46.80		66				daily	17.7	93.9		continuous	237					
19-Dec-19	48.94	336.30	67	WEEK 10	1 sample/week		daily	16.6	94.4		continuous	237			sent to on-site storage/land application		
20-Dec-19	48.94		68				daily	16.6	94.2		continuous	241					
21-Dec-19	46.41		69				daily	16.6	95.0		continuous	248					
22-Dec-19	43.41		70				daily	16.6	95.1		continuous	250	1/mo				
23-Dec-19	47.38		71				daily	16.6	95.2		continuous	256					
24-Dec-19	47.10		72				daily	16.7	94.9		continuous	241					
25-Dec-19	45.55		73				daily	16.7	95.9		continuous	239					
26-Dec-19	47.19	331.99	74	WEEK 11	1 sample/week	<1000	daily	16.5	94.4	95.9	continuous	237			sent to on-site storage/land application		
27-Dec-19	49.24		75				daily	16.5	95.3		continuous	237					
28-Dec-19	47.77		76				daily	16.3	94.1		continuous	237					
29-Dec-19	47.77		77				daily	16.3	95.0		continuous	239					
30-Dec-19	48.36		78			<1000	daily	16.1	95.0	96.1	continuous	245					
31-Dec-19	49.30		79				daily	16.8	95.3		continuous	250					
1-Jan-20	46.35		80				daily	16.8	95.0		continuous	244					
2-Jan-20	51.60	337.46	81	WEEK 12	1 sample/week		daily	16.4	94.8		continuous	242			sent to on-site storage/land application		
3-Jan-20	47.69		82				daily	16.5	94.3		continuous	246					
4-Jan-20	43.91		83				daily	16.6	94.9		continuous	247					
5-Jan-20	50.24		84				daily	16.4	94.8		continuous	246					

NOZZLE	QTY	SIZE/RATING/MAT'L	SERVICE
N1	2	10" DIA NR (MATCHES 300# FLANGE) SS	FEED INLET
N2	1	18" x 31 5/16" NR (SEE DETAIL ON SH. 2) SS	VAPOR OUTLET
N3	1	12" x 12" (SEE DETAIL ON SH. 2) SS	SIDE DISCHARGE (TO ROTARY VALVE)
N4	2	8" x 12" OPENING	CLEAN-OUT W/COVER
N5	1	1/2" FNPT	PRESSURE TRANSMITER PROCESS. CONN.
N6	1	6" LAP FLANGE NR (SEE DETAIL ON SHT. 2) SS"	FINES RETURN
N7	1	6" 300# RFSO ANSI FLG CS	THERMAL FLUID INLET
N8	1	6" 300# RFSO ANSI FLG CS	THERMAL FLUID OUTLET
N9	2	20" DIA. SS	ACCESS OPENING W/ SAFETY LOCK
N10	1	1"-150# RFSO ANSI FLANGE SS	INSTRUMENT SPARE W/BLIND FLANGE
N11	3	1"-150# RFSO ANSI FLANGE SS	WATER SPRAY CONNECTION
N12	4	1"-150# RFSO ANSI FLG SS	THERMOCOUPLES
N13	1	26 1/2" x 90" (SEE DETAIL ON SH. 2) SS	DEFLAGRATION DUCT CONNECTION
N14	1	1/2" NPT	EXPL. PANEL LIMIT SWITCH JUNCTION BOX
N15	1	6" DIA. NR SS	VIEW PORT W/WIPER
N16	1	1/4" NPT	VIEW PORT RINSE CONNECTION
N17	1	1/2" NPT HALF COUPLING	THERMOCOUPLE
N18	1	1"-150# RFSO ANSI FLANGE SS	WATER SPRAY CONNECTION
N19	1	1 1/2" NPT HALF COUPLING	LEVEL SWITCH
N20	1	XX CS	REDUCER FAN MOTOR CONN.
N21	1	XX CS	MOTOR CONDUIT CONN.
N22	2	1/2"-FNPT HALF COUPLINGSS	SEAL AIR PURGE SUPPLY
N23	2	1/2"-300# GATE VALVE W/BLIND FLANGE CS	JACKET OIL DRAIN

NR = NO PRESSURE RATING. SS = STAINLESS STEEL. CS=CARBON STEEL.

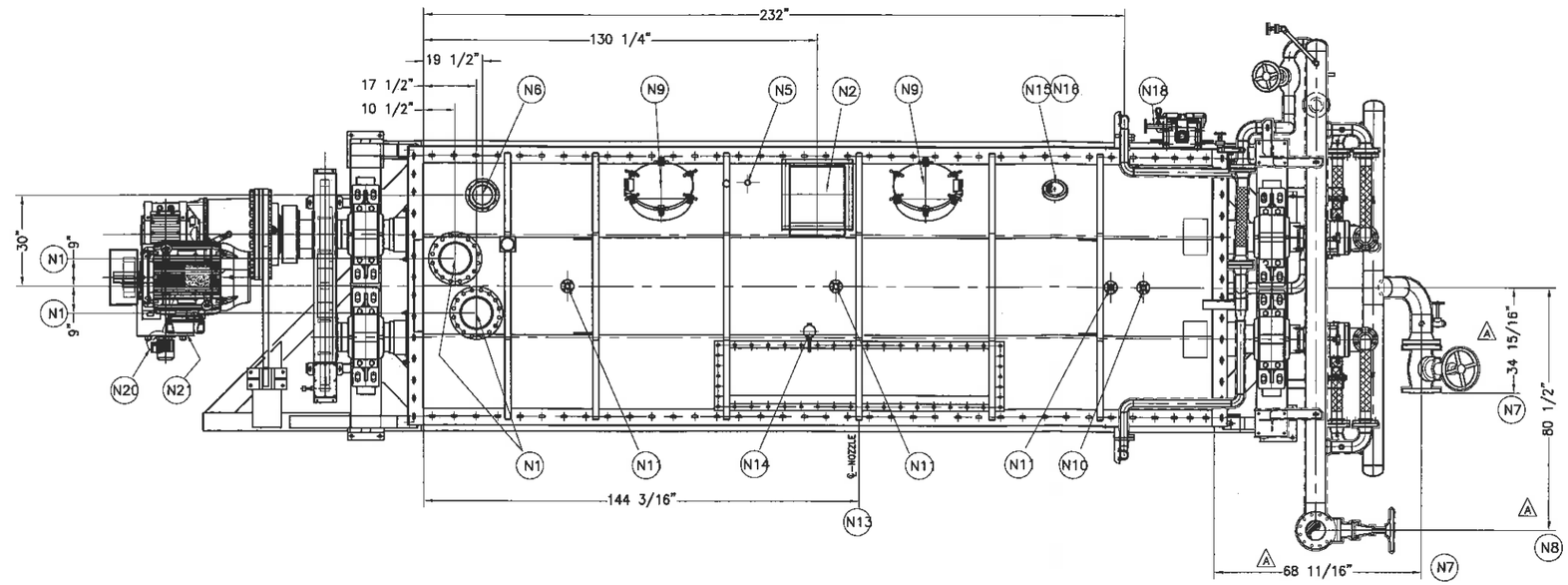

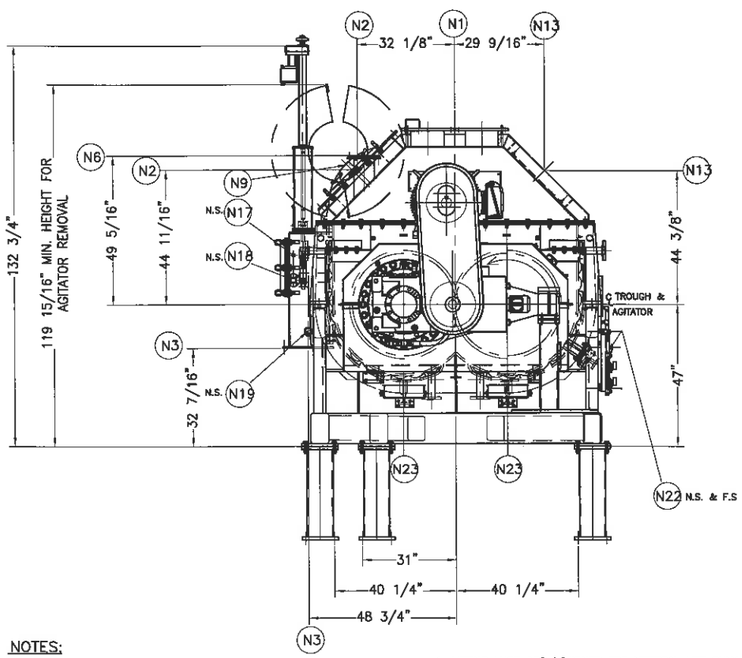

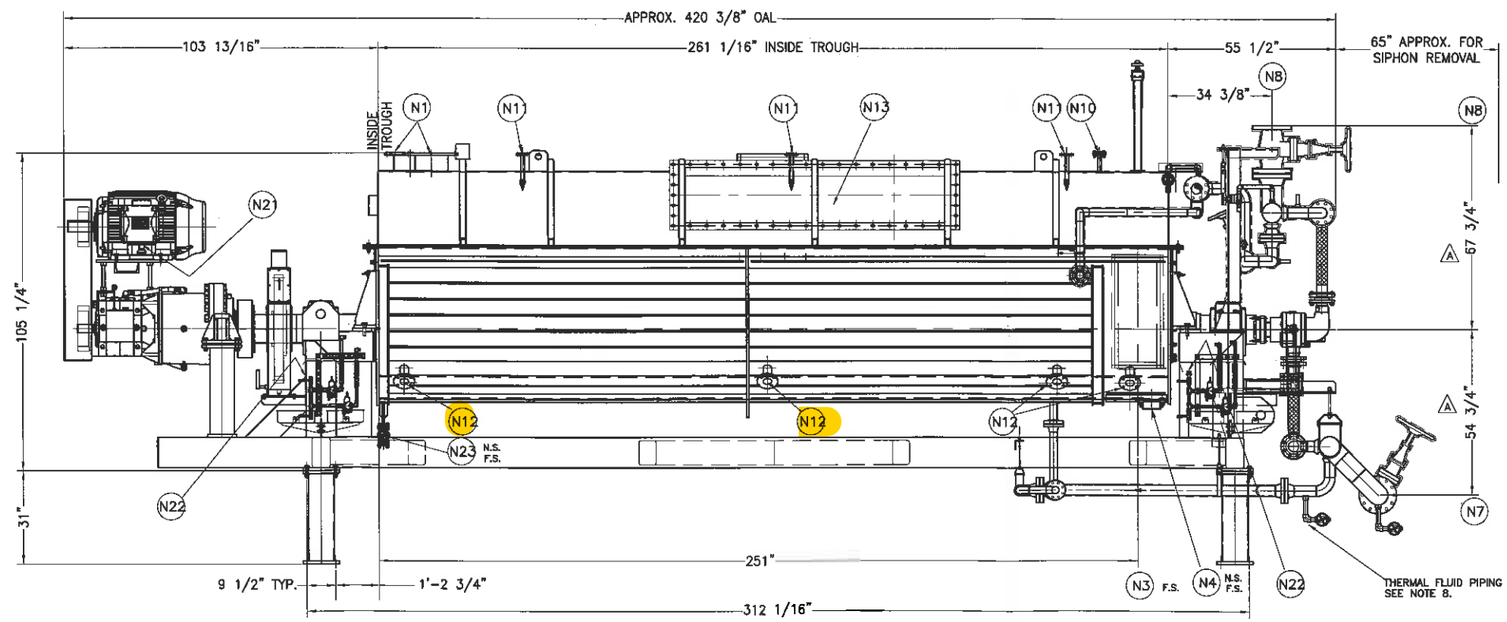

NOTES:

1. TOTAL EMPTY WEIGHT 78,000 LBS
   AGITATOR SHAFT WEIGHT 18,000 LBS EACH
   OPERATING WEIGHT 98,000 LBS
   FLOODED WEIGHT 113,000 LBS (TO TOP OF TROUGH)
2. REFER TO KOMLINE-SANDERSON ENGINEERING CORPORATION SPECIFICATIONS FOR ADDITIONAL INFORMATION SUCH AS DRIVE DESCRIPTION, PRESSURE AND TEMPERATURE RATINGS, MATERIALS OF CONSTRUCTION, ETC.
3. CONNECTIONS ARE NOT DESIGNED TO ACCEPT EXTERNAL LOADS. CONNECTED PIPING AND DUCTS MUST BE INDEPENDENTLY SUPPORTED AND ARRANGED TO ALLOW FOR THERMAL EXPANSION (HORIZONTAL MOVEMENT 1 1/4". VERTICAL MOVEMENT 3/8".)
4. LIFTING LUGS ARE DESIGNED FOR VERTICAL LIFT ONLY. SPREADER BARS ARE NOT PROVIDED BY KOMLINE-SANDERSON.
5. HEAT TRANSFER MEDIUM - THERMAL FLUID.
6. PROCESS SIDE DESIGN PRESSURE +/- 13" W.C.
7. DEFLAGRATION VENT PANEL ACTIVATION PRESSURE 1.45 PSI.
8. THERMAL FLUID PIPING WILL BE REMOVED FOR SHIPMENT.

DRYER IS DESIGNED AND CONSTRUCTED PER ASME CODE, SECTION VIII, DIVISION 1 AS FOLLOWS:

	PRESSURE	TEMPERATURE	"U" STAMP
AGITATORS	125 PSIG	550°F	YES
JACKET	125 PSIG	550°F	NO

REV	DRAW	CHKD	DATE	APPR	
A	VC	DAB	13-APR-18	VC	RELOCATED NOZZLES N7 & N8. MOD. NOZZLE N3 BOLT PATTERN & NOZZLE N6 OD.

THIS DRAWING IS THE PROPRIETARY PROPERTY OF KOMLINE-SANDERSON CORPORATION. IT IS LOANED IN CONFIDENCE AND MUST BE RETURNED ON DEMAND. ANY USE INTRINSICAL TO THE INTERESTS OF KOMLINE-SANDERSON CORPORATION IS PROHIBITED. IT MUST NOT BE LOANED, COPIED OR REPRODUCED WITHOUT PERMISSION.

TITLE: GENERAL ARRANGEMENT
K-S PADDLE DRYER
MODEL 11W-1200

D0571
HRRSA
NORTH RIVER WWTF
MT. CRAWFORD, VA

DESIGNED BY	DRAWN BY	CHECKED BY	APPROVED BY
-	VC	DAB	VC

DATE: 27-OCT-17
SCALE: 1=24

KOMLINE-SANDERSON CORPORATION
PEAPACK, NJ 07977 USA

REFERENCE: ---
DRAWING NO. D0571-00001D
REV A
SHT 1 OF 2

PRINT MAY BE REDUCED SIZE, DO NOT SCALE. ▭ =ONE INCH(1")

Released
16-Aug-17