COMMONWEALTH of VIRGINIA

DEPARTMENT OF ENVIRONMENTAL QUALITY
PIEDMONT REGIONAL OFFICE
4949A Cox Road, Glen Allen, Virginia 23060
(804) 527-5020 Fax (804) 527-5106
www.deq.virginia.gov

Molly Joseph Ward
Secretary of Natural Resources

David K. Paylor
Director

Jeffery Steers
Regional Director

May 17, 2017

Paula A. Hamel
Director, Generation Environmental Services
Dominion Virginia Power
Chesterfield Power Station

Transmitted electronically: paula.a.hamel@dom.com

Re: VA0004146 – Chesterfield Power Station – Low Volume Wastewater Treatment System Phase I – Concept Engineering Report

Ms. Hamel:

Thank you for submitting the above referenced Concept Engineering Report (CER) in accordance with Part I.C.20 of VPDES Permit VA0004146 which became effective on October 1, 2016. The Department of Environmental Quality has reviewed and hereby approves the revised CER for the Phase I construction of the Low Volume Wastewater Treatment System received May 16, 2017.

This approval is your authorization for construction. No later than 14 days following completion of construction, please provide a written statement certifying that the facilities were constructed in accordance with the approved plans. The facility's Operation and Maintenance Manual should also be revised to reflect these changes.

The Department of Environmental Quality approval does not relieve the owner of the responsibility of designing, constructing, maintaining, and operating the facilities in a reliable and consistent manner to meet the effluent limitations or other special conditions of the permit, or the responsibility for the correction of design and/or operation deficiencies. This approval also does not relieve the owner from meeting all other laws and regulations as may be applicable.

Please contact Joseph Bryan at (804) 527-5012 or via email at Joseph.Bryan@deq.virginia.gov if you have any questions.

Sincerely,

Emilee C. Adamson

Emilee C. Adamson
Planning and Water Permit Manager

Enclosure: Approval Memorandum

cc: Kenneth Roller – Dominion

MEMORANDUM

DEPARTMENT OF ENVIRONMENTAL QUALITY
Piedmont Regional Office

4949-A Cox Road **Glen Allen, VA 23060** **804/527-5020**

SUBJECT: Concept Engineering Report
Low Volume Wastewater Treatment System (Phase I)
VPDES Permit No. VA0004146 - Dominion Chesterfield Power Station

TO: Emilee Adamson, Planning and Water Permit Manager

FROM: Joseph Bryan, VPDES Permit Writer

DATE: May 17, 2017

COPIES: Paula A. Hamel - Dominion
Kenneth Roller - Dominion

Project Name: Concept Engineering Report (CER) – Low Volume Wastewater Treatment System (Phase I)

Project Owner: Virginia Electric and Power Company d/b/a Dominion Virginia Power

Background: Dominion Virginia Power submitted a Concept Engineering Report (CER) prepared by Geosyntec Consultants, Inc., under a cover letter dated January 31, 2017, for Phase I construction of the Low Volume Wastewater Treatment System (LVWWTS). The CER was submitted in accordance with Special Condition I.C.20 of VPDES Permit VA0004146 and was received by DEQ on February 3, 2017. Additional information was provided by Dominion on May 1, 2017, which was incorporated into a revised CER submitted on May 16, 2017.

The CER is being developed to cover the new LVWWTS components that will be used to treat the process wastewaters and contact stormwater runoff that will be redirected from the Lower Ash Pond (LAP) or that are otherwise created during the conversion from wet-to-dry ash management. The LVWWTS compliance sequencing is broken into three (3) phases. The first phase, as detailed in the CER, includes development of three basins to provide equalization of discharge streams for flow control, to provide Total Suspended Solids (TSS) removal, provide pH adjustment, and for the ability to conduct representative treatability analyses needed to inform subsequent phases.

Project Scope: The initial phase of the LVWWTS construction will include construction of three basins: the EQ Basin, the Discharge Basin, and the Coal Pile Runoff Basin. The EQ Basin and Discharge Basin will be constructed with both a wet volume and a dry volume storage for solids settling, as needed. The wet volume storage provides a continual pool of water to facilitate settling of suspended solids in the effluent. The dry volume storage provides storage of effluent sufficient to contain at least a 25-year, 24-hour storm event.

The EQ Basin will ultimately collect all wastewater discharges. For an intermediate period, prior to the initial discharge from Outfall 301, the Coal Pile Runoff Basin

discharge may be directed to the LAP for the purposes of startup and commissioning. The Coal Pile Basin will collect runoff from the coal pile and subsequently feed into the metals treatment system that will be constructed during Phase 2.

The purpose of the EQ Basin is to provide moderation of the flows and water quality of the effluent waste streams, which is critical to efficient and reliable treatment of the combined waste streams to meet the required VPDES permit limits. The EQ Basin will be directed to the Discharge Basin. The purpose of the Discharge Basin is to maintain, in conjunction with the EQ Basin, a flow below the maximum permitted discharge rate of 6.0 MGD through Outfall 301. In addition, the discharge Basin allows for the assimilation of treated effluent prior to discharge through Outfall 301 to ensure that the permit limits are achieved. During commissioning of the Phase I systems and prior to discharge through Outfall 301, temporary connections between the EQ Basin and the LAP will allow for the treated effluent from the EQ Basin to discharge to the LAP, as needed. Leachate from the new FFCP facility will not be directed to the EQ Basin during this initial commissioning period. Phase I is estimated to be completed during fall 2017.

Treatment system components and additional design details are included within the revised Phase I CER provided May 16, 2017.

Staff Comments: Staff has no objections to the wastewater treatment system as proposed in the revised Phase I CER.

A separate CER shall be required for subsequent phases, including the treatment system designed and operated to treat final configuration (post-construction) wastewaters.

Recommendation: Staff recommends that the revised Phase I CER be approved.

Approved: Emilee C. Adamson

Emilee C. Adamson
Planning and Water Permit Manager

Date: May 17, 2017

Dominion Resources Services, Inc.
5000 Dominion Boulevard, Glen Allen, VA 23060

dom.com

May 15, 2017

Ms. Emilee Adamson
Virginia Department of Environmental Quality
Piedmont Regional Office
4949-A Cox Road
Glen Allen, VA 23060

Subj: Revised Concept Engineering Report; Phase I Low Volume Wastewater Treatment System; VPDES Permit 0004146; Chesterfield Power Station

Dear Ms. Adamson:

Please find enclosed a revised Conceptual Engineering Report (CER) for Phase I of the Low Volume Waste Water System (LVWWTS) at the Chesterfield Power Station. In response to the additional request letter dated April 21, 2017, Dominion has provided the additional information requested to enable DEQ to complete the review and approval of the CER. The following lists the specific requests and the location of the response in the revised CER.

1. With regard to design, please provide:

   a. The overall size, volume, and detention time of the EQ Basin, Discharge Basin· and Coal Pile Runoff Basin;

      Response: With regard to the EQ Basin, this comment is addressed in Section *2.2.5.1 Equalization (EQ) Basin* (p15) and in Figure 3 of the revised CER.

      With regard to the Discharge Basin, this comment is addressed in Section *2.2.5.2 Discharge Basin (p17)* and in Figure 4 of the revised CER.

      With regard to the Coal Pile Runoff Basin, this comment is addressed in Section *2.2.5.3 Coal Pile Runoff Basin (p19)* and in Figure 5 of the revised CER.

   b. Earthen structure profile drawings for all the basins;

      Response: Earthen structure profile drawings for all basins are located in Appendix B - Section Drawings: All Basins of the revised CER.

   c. A summary of wastewater conveyance design to include:

      i. A map of all proposed conveyances; and,

      Response: The revised Figure 1 highlights the conveyance pipe systems in 'blue' for clarity. In addition, Figure 2 in the revised CER provides information regarding the process wastewater flows that will be conveyed to the LVWWTS.

ii. Identification of pipes, pumps, pump rates, sizing, etc. for the wastewater conveyed from the Coal Pile Runoff Basin to the LVWWTS.

Response: The Process and Instrumentation Diagram for the Coal Pile Runoff Basin has been included in Appendix D of the revised CER. Information on the pump rate for the Coal Pile Runoff Basin pumps has been added to Section *2.2.5.3 Coal Pile Runoff Basin (p19)* of the revised CER.

d. The basin design for the Coal Pile Runoff Basin (liner, etc.);

Response: Construction details associated with the liner system and underdrain system are included in Appendix E of the revised CER.

e. A summary of the conceptual design of the under-liner drainage systems for the EQ and Discharge Basins;

Response: Construction details associated with the liner systems and underdrain systems for the EQ and Discharge Basins are included in Appendix C of the revised CER.

f. Calculations supporting how the wet volume operational conditions are intended to achieve the solids settling needed to comply with effluent limitations; and

Response: A discussion that addresses this comment is included in Section *2.2.3 General Wastewater Management Approach* (p14) and Section *2.2.4 Phase 1 Management of Wastewater (p14)* in the revised CER.

g. A summary of the conceptual design and design calculations for the pH adjustment needed to comply with effluent limitations (i.e. details on a chemical feed system, selection of chemicals, secondary containment for chemical storage, feed rates, etc.).

Response: A discussion that addresses this comment is included in Section *2.2.3 General Wastewater Management Approach* (p14) and Section *2.2.4 Phase 1 Management of Wastewater (p14)* of the revised CER.

2. With regard to operation, please provide:

a. The minimum dry volume capacities to be maintained by the EQ Basin, Discharge Basin and Coal Pile Runoff Basin to contain design storm events; and

Response: With regard to the LVWWTS as a whole, this comment is addressed in the first paragraph of Section *2.2.5 LVWWTS Operational Requirements* of the revised CER, with potential dry volume capacities of each basin listed in Tables 8, 9, and 10 for the EQ Basin, Discharge Basin, and the Coal Pile Runoff Basin, respectively.

b. The maintenance/cleanout strategy for the Coal Pile Runoff Basin.

Response: The maintenance/cleanout strategy for the Coal Pile Runoff Basin is discussed in the final paragraph Section *2.2.5.3 Coal Pile Runoff Basin (p20)* of the revised CER.

I certify under penalty of law that this document and all attachments were prepared under my direction or supervision in accordance with a system designed to assure that qualified personnel properly gather and evaluate the information submitted. Based on my inquiry of the person or persons who manage the system, or those persons directly responsible for gathering the information, the information submitted is, to the best of my knowledge and belief, true, accurate, and complete. I am aware that there are significant penalties for submitting false information, including the possibility of fine and imprisonment for knowing violations.

If you have any questions regarding this submittal, please contact Ken Roller at Kenneth.Roller@dom.com. Thank you for your assistance.

Sincerely,

Jason E. Williams
Manager, Generation Environmental Services

Prepared for

Dominion Virginia Power
500 Coxendale Road
Chester, Virginia 23836

CONCEPT ENGINEERING REPORT

Low Volume Wastewater Treatment System

Chesterfield Power Station

Prepared by

Geosyntec consultants
9211 Arboretum Parkway, Suite 200
Richmond, Virginia 23236

Project Number MV1222 & MV1372

January 2017
Revised May 2017

TABLE OF CONTENTS

1. INTRODUCTION 1
1.1 Overview and Purpose 1
1.2 Project Background 1

2. PHASE 1– OUTFALL 301 HYDRAULIC AND INTERIM COMPLIANCE 4
2.1 Evaluation of Wastewater Sources, Characteristics, and Treatability 5
2.1.1 Wastewater and Stormwater Inputs 5
2.1.2 Wastewater and Stormwater Generation 6
2.1.3 Sample Collection Methodology 12
2.2 Design Approach and Methods 13
2.2.1 Hydraulic Effluent Limitations 13
2.2.2 Facility Siting 13
2.2.3 General Wastewater Management Approach 14
2.2.4 Phase 1 Management of Wastewater 14
2.2.5 LVWWTS Operational Requirements 15
2.3 Pilot Treatment Systems and Contingency 21
2.3.1 Mobile Treatment System 21
2.3.2 Recirculation 21

3. PHASE 2 OF LVWWTS (PLACEHOLDER FOR FUTURE SUBMITTAL) 22

4. PHASE 3 OF LVWWTS (PLACEHOLDER FOR FUTURE SUBMITTAL) 23

LIST OF FIGURES

Figure 1: **Revised Outfall and Metering Location Map**

Figure 2: **Process Flow Diagram**

Figure 3: **Equalization Basin Plan**

Figure 4: **Discharge Basin Plan**

Figure 5: **Coal Pile Runoff Basin Plan**

LIST OF APPENDICES

Appendix A – Hydrologic Calculations

Appendix B – Section Drawings: All Basins

Appendix C – Equalization Basin and Discharge Basin Liners and Underdrain System Drawings

Appendix D – Coal Pile Runoff Basin Process and Instrumentation Diagram

Appendix E – Coal Pile Runoff Basin Liner and Underdrain System Drawings

1. INTRODUCTION

1.1 Overview and Purpose

This Concept Engineering Report (CER) was prepared by Geosyntec Consultants, Inc. (Geosyntec) for Dominion Virginia Power (Dominion) in support of the ongoing efforts to comply with regulatory requirements associated with the new Low Volume Waste Water Treatment System (LVWWTS) at the Chesterfield Power Station (the Station) located in Chester, Virginia, about 15 miles south of Richmond on the James River. The purpose of this report is to serve as documentation of inputs and considerations that will be used to design the construction documents for the LVWWTS, and to demonstrate compliance with the renewed Virginia Pollutant Discharge Elimination System (VPDES) Permit VA0004146 issued on September 23, 2016. The proof of concept for the proposed treatment system will be based on the published regulatory effluent limitations associated with the aforementioned permit, the new Steam Electric Effluent Limitation Guidelines (ELGs), Station operational requirements, and the wastewater chemistry and flow data collected at the site. The scope of this CER covers the LVWWTS only as a phased construction program in accordance with the VPDES permit compliance schedule.

1.2 Project Background

The Station is an active, operating electric power generating station comprised of four (4) coal-fired combustion units (Units 3, 4, 5, and 6) and two (2) natural gas-fired combined cycle units (Units 7 and 8). Currently, many wastewaters generated at the Station are being directed to the Lower Ash Pond (LAP). In compliance with the federally mandated Coal Combustion Residual (CCR) rules, Dominion is planning to close the LAP. As a result of the closure, the wastewaters can no longer be directed to the LAP, and additional processes related to ash management must be changed.

This CER is being developed to cover the new LVWWTS components that will be used to treat the process wastewater and contact stormwater runoff that will be redirected from the LAP or that are otherwise being created during the conversion from wet-to-dry ash management (described in **Section 2.1** below). The VPDES regulated outfalls that are included in this CER are as follows:

- Outfall 301 – An internal outfall located within the Thermal Channel up-gradient from Outfall 003. This internal outfall is the discharge from the new LVWWTS and includes inputs from other internal outfalls listed below:
    - Outfall 302 – Discharge from the Flue Gas Desulfurization (FGD) wastewater treatment plant
    - Outfall 303 – Discharge from the Metal Cleaning Waste Treatment Basin

- Outfall 304 – Discharge of the leachate from the new Fossil Fuel Combustion Products (FFCP) Management Facility, as needed. Instead of a separate discharge, the leachate may be routed through the FGD wastewater treatment plant, and the contact stormwater will be routed through the FGD Yard Sumps.

- Outfall 305 – Discharge from the Coal Pile Runoff Metals Treatment System, as needed

A summary of the wastewater conveyance design, including a map of all proposed conveyances, with the internal outfalls listed above identified, can be found in **Figure 1** for reference. **Figure 2** also provides additional information regarding the process wastewater flows that will be conveyed to the LVWWTS.

The LVWWTS compliance sequencing is broken into three (3) phases described in more detail below. The first phase includes development of three basins to provide equalization of discharge streams for flow control, to provide Total Suspended Solids (TSS) removal, provide pH adjustment, and for the ability to conduct representative treatability analyses needed to inform subsequent phases. The second phase includes implementation of a treatment system for coal pile runoff (as needed), for FFCP Management Facility leachate (if necessary), and a possible metals polishing treatment system to treat the discharge between the Equalization (EQ) Basin and the Discharge Basin. The third phase includes the development, construction, and commissioning of treatment systems for the FGD wastewater. Additional detail for each phase is presented below.

- **Phase 1**
  The initial phase of the LVWWTS construction will include construction of three basins: the EQ Basin, the Discharge Basin, and the Coal Pile Runoff Basin. The EQ Basin and the Discharge Basin will be constructed with both a wet volume and a dry volume storage. The wet volume storage provides a continual pool of water to facilitate settling of suspended solids in the effluent. The dry volume storage provides storage of effluent sufficient to contain at least a 25-year, 24-hour storm event.

  The EQ Basin will ultimately collect all wastewater discharges. For an initial intermediate period, prior to the initial discharge from Outfall 301, the Coal Pile Runoff Basin discharge may be directed to the LAP for the purposes of startup and commissioning. The Coal Pile Basin will collect runoff from the coal pile and subsequently feed into a metals treatment system described below in Phase 2. The purpose of the EQ Basin is to provide moderation of the flows and water quality of the effluent waste streams, which is critical to efficient and reliable treatment of the combined waste streams to the required limits. The EQ Basin will be directed to the Discharge Basin.

The Discharge Basin serves to maintain, in conjunction with the EQ Basin, a flow below the maximum permitted discharge rate. In addition, the Discharge Basin allows for the assimilation of treated effluent prior to discharge through internal Outfall 301 to ensure the permit limits are achieved. During commissioning of the Phase 1 systems, and prior to discharge through Outfall 301, temporary connections between the EQ Basin and the LAP will allow for the treated effluent from the EQ Basin to discharge to the LAP, as needed. Leachate from the new FFCP facility will not be directed to the EQ Basin during this initial commissioning period. Phase 1 is estimated to be complete during fall 2017.

- **Phase 2**
  Phase 2 consists of the design, construction, and commissioning of a coal pile runoff metals treatment system, as needed; a treatment system for the FFCP Management Facility leachate, if necessary; and a polishing metals treatment system, if needed, at the discharge of the EQ Basin. The purpose of these treatment systems is to achieve compliance with the final effluent limitations at each of the respected internal outfalls in accordance with the VPDES permit. The effluent from the Coal Pile Runoff metals treatment system will be directed to the EQ Basin constructed in Phase 1 through new internal Outfall 305. The location of the new internal outfall for the coal pile runoff treatment system will be provided in the Phase 2 CER that will be prepared and submitted to DEQ. In addition, a metals treatment system may be added to address leachate originating from the FFCP Management Facility, if necessary. The internal outfall (Outfall 304) will be directed to the LVWWTS via the FGD Yard Sump line to the EQ Basin. Lastly, Phase 2 also consists of the design and construction of a polishing metals treatment system, if needed, between the EQ Basin and the Discharge Basin. After the Coal Pile Runoff Treatment system is commissioned, a treatability study will be conducted on the effluent from the EQ Basin to determine if additional metals treatment is required to meet the final permit limits for internal Outfall 301. In accordance with the permit, the implementation of this phase must be completed within four years of the effective date of the VPDES permit reissuance.

- **Phase 3**
  Phase 3 includes the construction and commissioning of selenium, nitrate/nitrite, and metals removal systems at the FGD wastewater treatment plant. A treatability study will be conducted to determine the type of treatment needed to comply with the final effluent limits on the FGD wastewater treatment plant discharge. The treatment system will be constructed and commissioned by March 29, 2022 in accordance with the compliance schedule in the VPDES permit.

This initial CER submittal includes the Phase 1 portion only, which is included in **Section 2** of this CER. Phases 2 and 3 will be added and submitted under separate cover as **Sections 3** and **4**,

respectively, as additional treatability studies and technology evaluations and selections are concluded.

2. PHASE 1– OUTFALL 301 HYDRAULIC AND INTERIM COMPLIANCE

The Phase 1 construction plan primarily includes the hydraulic conveyance and storage systems of the LVWWTS. However, the Phase 1 construction plan must also achieve the interim effluent limitations as identified in **Table 1** below and published in the VPDES permit. Upon completion of the Phase 1 portion, further evaluations will be required to fully develop the Phase 2 portion of the construction program. Additional evaluations will include monitoring the discharge from the EQ Basin after equalization. Should monitoring during the commissioning period indicate that additional treatment is necessary to achieve compliance with the interim limits, Dominion will implement, as needed, a pilot treatment system that may include vendor provided mobile systems and recirculation and/or localized treatment. Further information on pilot treatment and contingency planning is included in **Section 2.3**.

Table 1: Effluent Limitations, Outfall 301

CONSTITUENTS	DISCHARGE LIMITATIONS			
	MONTHLY AVERAGE	WEEKLY AVERAGE	DAILY MINIMUM	DAILY MAXIMUM
Flow (MGD)	NL	NA	NA	6.0
pH (SU)	NA	NA	6.0	9.0
Total Suspended Solids (TSS)	30 mg/l 22 Kg/d	NA	NA	100 mg/l 72 kg/d
Total Residual Chlorine (µg/L)	180	NA	NA	180
Interim – Total Recoverable Copper (µg/L)	NL	NA	NA	NL
Final – Total Recoverable Copper (µg/L)	72	NA	NA	72
Ammonia as N (kg/d)	NA	NA	NA	235
Interim – Chloride (mg/L)	NL	NA	NA	NL
Final – Chloride (mg/L)	3100	NA	NA	3100
Interim – Total Recoverable Nickel (µg/L)	NL	NA	NA	NL
Final – Total Recoverable Nickel (µg/L)	230	NA	NA	230
Interim – Total Recoverable Zinc (µg/L)	NL	NA	NA	NL
Final – Total Recoverable Zinc (µg/L)	900	NA	NA	900

Heptachlor (µg/L)	NL	NA	NA	NL
Oil and Grease (mg/L)	15	NA	NA	20

NL – No Limitation; NA – Not Applicable

2.1 Evaluation of Wastewater Sources, Characteristics, and Treatability

This section includes an analysis of the wastewater and stormwater characteristics, including generation rates and chemical constituents to support the concept design of the LVWWTS.

2.1.1 Wastewater and Stormwater Inputs

The LVWWTS will be comprised of several wastewater and stormwater inputs that were previously directed to the LAP for treatment and discharge through Outfall 004, and new inputs as described below. Wastewater will be discharged from the LVWWTS through internal Outfall 301.

- FGD Yard Sumps. The FGD Yard Sumps include multiple yard sumps within the area of the FGD wastewater treatment plant at the Station. Specifically, these yard sumps include Station Sumps 1, 2, and 3. These sumps primarily receive contact stormwater, but also receive Proctors Creek make up screen backwash water. These sumps currently collectively discharge into a single pipe leading to the existing Master Retention Pond prior to discharging to the LAP (see **Figure 1**). In the final configuration, the sump discharges will be re-routed to the LVWWTS.

  Other planned inputs into the FGD Yard Sump discharge include the following:

  - FFCP Management Facility: Leachate (interim) and contact stormwater from the FFCP Management Facility will be piped to the FGD Yard Sumps via a lift station.
  - Fly Ash Silo Area: Contact stormwater from the area around the Fly Ash Silos will be pumped (via a containment sump) to the FGD Yard Sumps.
  - FGD Wastewater Treatment Plant (WWTP) Discharge: This input is also part of the FGD Yard Sump discharge and is included in the flows metered at the effluent of the FGD Yard Sump. The FGD WWTP discharge ties to the FGD Yard Sump discharge pipe inside the Station complex.

- Master Sump. The Master Sump includes the main operation sump at Unit 6 that receives the majority of the operational wastewater generated by the Station, including blowdown and housekeeping activities such as floor washing, in addition to industrial contact stormwater runoff. This sump includes multiple pumps varying in size and horsepower.

- Metal Cleaning Waste Treatment Basin Discharge. This is a holding and treatment basin for metal cleaning wastewater. The basin is typically dewatered in a controlled manner via a multi-staged pipe and valve system that is manually operated. The current discharge location of the basin is through the sump directly to the LAP via an 18-inch gravity pipe.
- Coal Pile Runoff Discharge. The Coal Pile Runoff discharge is a contact stormwater discharge that is currently routed to the LAP. The volume of discharge is dependent upon the precipitation rates and configuration of the coal pile.
- S-Ditch Pump Station. The S-Ditch serves as a containment dike and a drainage conveyance channel. The containment portion is for the ash sluice lines for Units 3, 4, 5, and 6, in addition to, the FGD, Master, and pipe networks to the LAP in the event of a pipe failure.
- Upper Ash Pond (UAP) Toe Drain Force Main. The UAP toe drain force main will originate from the UAP closure area and be directed to the LVWWTS via a 6-inch pipe.
- Lower Ash Pond (LAP) Toe Drain Force Main. The LAP toe drain force main will originate from the LAP closure area and be directed to the LVWWTS via a 3-inch pipe.

Figure 2 depicts the various wastewater inputs in relation to the existing and proposed conditions.

2.1.2 Wastewater and Stormwater Generation

The wastewater and stormwater volumes were estimated using collected metered data or through hydrologic analysis, respectively. The methodology used to determine the average and maximum average daily flow volumes is described below.

2.1.2.1 General Stormwater Generation Approach

Given the existing site conditions, the stormwater runoff peak flow rates and volumes were determined using the National Resources Conservation Service (NRCS) method, which is dependent on the soil's ability to absorb a certain amount of precipitation before runoff begins. This ability is categorized based on a Hydrologic Soil Group (HSG), which categorizes the soils into an A, B, C, or D soil type. A type A soil represents a high permeable soil in terms of stormwater infiltration, and a type D soil represents a low permeable soil. The hydrologic calculations were performed using HydroCAD® micro-computer program. The following list details the assumptions used in determining the peak runoff and associated runoff volumes for each identified input.

1. The estimated surface runoff used the NRCS curve number method. The HSG is fairly consistent given current site characteristics and was assumed to be HSG of D for all land cover categories. The estimated values are presented in **Table 2** below for each land cover category:

Table 2: Curve Numbers, CN [1]

Description	HSG	Curve Number, CN
Brush, Fair	D	77
Woods, Fair	D	79
Coal Pile	D	85
Site Stone (Non-compacted)	D	87
Grass cover, Poor <50%	D	89
General Industrial	D	93
Roofs, Pavement & Impervious Area	D	98

2. The annual 1-, 2-, 10-, 25-, and 100-year precipitation data is outlined in Table 3 below using a Type II rainfall distribution in accordance with geographic boundaries for NRCS (SCS) rainfall distributions [2] :

Table 3: Precipitation Data

Year Storm	24-hour Depth (in)
1	3.00
2	3.50
10	5.60
25	6.10
100	8.00

3. The time of concentration, t_c, was computed using TR-55 methodology. The Manning's Roughness Coefficient for sheet flow was assumed to be the following: short grass (0.15), non-compacted stone (0.15), dense grass (0.24), and pavement and other impervious (0.011) areas for a maximum of 200 feet, depending on site conditions. Shallow concentrated flow over paved or unpaved areas was used for the remaining distance up to a well-defined receiving channel (if applicable). The remainder of the distance was defined by geometric shape as presented in the calculations (See **Appendix A** for each input flow).

4. The flowrate for the design storm is assumed to be discharged over a 24-hour period.

An explanation of how the estimated volume was determined for each input is discussed below.

[1] Refer to Appendix A for weighted CN values per Outfall
[2] Obtained from http://www.hydrocad.net/pdf/TR-55%20Appendix%20B.pdf accessed on 19 May 2015.

2.1.2.2 FGD and Master Sumps

A metering plan was developed to collect flow data from the FGD Yard Sumps and the Master Sump discharge pipes at the existing master retention basin. An area-velocity meter with a data logger was installed at each effluent pipe. The location of the meters is shown in **Figure 1** for reference. The flows for these inputs are presented in **Table 4** in units of gallons per day. In addition, the FGD WWTP discharge flow (gallons per day) was included, so that the actual sump discharges could be determined.

As shown in **Table 4** below, there is variability in the flow on a day-to-day basis. The flows are very dependent upon the Station operations, such as on-going maintenance, storm events, and other unplanned activities. The daily average flow presented in **Table 4** represents the typical operating average daily volume. Although precipitation occurred during the metering period and the flow volumes varied slightly, the precipitation rates were not significant enough and regular enough to necessitate the calculation of a separate storm water runoff volume from the normal operating flows.

Table 4: Metered Daily Average Flows

Date	FGD Sump (MGD)	Master Sump (MGD)	FGD WWTP (MGD)	Date	FGD Sump (MGD)	Master Sump (MGD)	FGD WWTP (MGD)	Date	FGD Sump (MGD)	Master Sump (MGD)	FGD WWTP (MGD)	Date	FGD Sump (MGD)	Master Sump (MGD)	FGD WWTP (MGD)	Date	FGD Sump (MGD)	Master Sump (MGD)	FGD WWTP (MGD)
02/23/15	1.31	1.90	0.10	03/31/15	1.33	3.47	0.07	04/23/15	Meter Down	2.15	0.00	05/09/15	0.57	1.60	0.05	05/25/15	Meter Down	3.41	0.00
02/24/15	2.86	1.75	0.33	04/01/15	0.91	3.53	0.15	04/24/15		2.34	0.00	05/10/15	0.34	2.00	0.03	05/26/15		3.53	0.32
02/25/15	2.75	3.04	0.34	04/02/15	0.72	3.42	0.12	04/25/15		2.27	0.00	05/11/15	0.41	2.22	0.03	05/27/15		3.44	0.31
02/26/15	2.45	2.04	0.33	04/03/15	1.51	3.44	0.33	04/26/15		2.25	0.05	05/12/15	0.37	3.02	0.02	05/28/15		3.88	0.14
02/27/15	1.90	2.23	0.30	04/04/15	0.81	3.24	0.16	04/27/15		2.16	0.18	05/13/15	0.45	3.13	0.04	05/29/15		3.86	0.13
02/28/15	1.23	2.07	0.17	04/05/15	Meter Down	3.28	0.04	04/28/15		2.30	0.03	05/14/15	0.61	3.58	0.08	05/30/15		3.96	0.06
03/01/15	0.39	1.80	0.19	04/06/15		3.34	0.27	04/29/15		2.19	0.00	05/15/15	0.13	3.63	0.00	05/31/15		4.01	0.14
03/02/15	2.15	2.48	0.16	04/07/15		3.28	0.00	04/30/15		1.86	0.00	05/16/15	0.64	3.05	0.06	06/01/15		3.67	0.03
03/03/15	0.62	2.15	0.10	04/08/15		3.01	0.06	05/01/15		2.28	0.00	05/17/15	1.13	3.28	0.18	06/02/15		3.89	0.25
03/04/15	2.19	2.76	0.34	04/09/15		1.64	0.12	05/02/15		2.32	0.00	05/18/15	0.63	2.96	0.11	06/03/15		3.99	0.10
03/05/15	3.71	2.70	0.31	04/10/15		2.98	0.02	05/03/15		2.72	0.00	05/19/15	0.90	3.09	0.13	06/04/15		4.19	0.15
03/06/15	1.09	1.88	0.14	04/11/15		3.60	0.08	05/04/15		2.69	0.00	05/20/15	0.68	2.87	0.08	06/05/15		3.90	0.19
03/07/15	1.29	2.55	0.24	04/12/15		3.19	0.00	05/05/15		0.14	0.00	05/21/15	1.00	3.56	0.00	06/06/15		3.93	0.05
03/08/15	0.74	1.84	0.24	04/13/15		2.50	0.00	05/06/15		1.93	0.05	05/22/15	Meter Down	3.79	0.13	06/07/15		4.05	0.18
03/09/15	1.46	2.00	0.35	04/21/15		2.20	0.00	05/07/15	0.56	1.93	0.09	05/23/15		3.05	0.24	06/08/15		4.01	0.07
03/10/15	2.47	3.02	0.18	04/22/15		2.15	0.05	05/08/15	0.30	1.92	0.00	05/24/15		3.17	0.21	06/09/15		3.84	0.18

	FGD Sump (MGD)	Master Sump (MGD)	FGD WWTP (MGD)	FGD Sump w/out WWTP (MGD)
Average Flow:	1.18	2.72	0.11	1.07
Max. Avg. Daily Flow:	3.71	4.19	0.35	3.36

To account for additional volume destined for the LVWWTS during a larger storm event, a 25-year, 24-hour storm event was analyzed for the contributing drainage areas for both the FGD Yard Sumps and the Master Sump. The hydrologic calculations and analytical results are included in **Appendix A** for reference and summarized in **Table 5** below**.**

Table 5: Contact Stormwater Runoff Estimate

Drainage Area	Acres	25-year. 24-hour Storm Event (gallons)
FGD Sump	10.8	1,683,023
Master Sump	22.9	3,567,096
Coal Pile Runoff	18.8	2,404,132
Total:	**52.5**	**7,654,251**

2.1.2.3 Metal Cleaning Waste Treatment Basin

The Metal Cleaning Waste Treatment Basin is used during maintenance activities requiring wash water (typically in the fall and spring) during scheduled shutdown of a power generation unit. The discharge is sent to the Master Sump. The Master Sump (via a separate pipe system) is diverted to the Metal Cleaning Waste Treatment Basin for pH adjustment of the water to facilitate metals precipitation. The outfall of the basin is an internal discharge monitoring point included in the Station's VPDES permit. This flowrate and corresponding volume was not included in the LVWWTS system average flow, since the Metal Cleaning Waste Treatment Basin discharge is a controlled flow that can be managed by the Station and discharged when excess volume is available in the LVWWTS.

2.1.2.4 Coal Pile Runoff Basin

The estimated volume from the Coal Pile Runoff Basin was determined by hydrologic analysis using the assumption and analysis approach presented in **Section 2.1.2.1** above. This runoff volume was estimated using a 25-year, 24-hour storm event. Stormwater runoff (up to a 25-year, 24-hour storm event) from the coal pile will be directed to the LVWWTS. Stormwater runoff in excess of the 25-year, 24-hour storm event will discharge through an emergency spillway to an existing sediment basin that discharges to a conveyance channel leading to the Thermal Channel. The hydrologic calculations for the coal pile runoff are included in **Appendix A**. The design of the Coal Pile Runoff basin and the associated lift station is further described in **Section 2.2.4.3.**

2.1.2.5 S-Ditch Pump Station

The S-Ditch pump station provides containment pumping in the event of a pipe leak or rupture within the containment channel. Although this is an identified input to the LVWWTS, the flows and associated volumes are considered intermittent. Therefore, the S-Ditch pump station flow rate was not included in the overall design flow rates for the LVWWTS.

2.1.2.6 Upper Ash Pond (UAP) Toe Drain

The volume from the UAP Toe Drain is estimated based on the anticipated pump sizes proposed for the system. The UAP Toe Drain is expected to have minimal contribution to the overall planned daily volume anticipated at the LVWWTS. The average and maximum flows from the toe drain were based on two (2) and four (4) 70 gallon per minute pumps operating for 24 hours, respectively.

2.1.2.7 Lower Ash Pond (LAP) Toe Drain

The volume from the LAP Toe Drain is estimated based on one (1) and two (2) 50 gallons per minute pumps operating for 24 hours, to get the average and maximum flow rates, respectively. The LAP Toe Drain discharge is also expected to have minimal contribution to the overall planned daily volume anticipated at the LVWWTS.

2.1.2.8 FFCP Management Facility

The FFCP Management Facility (a CCR landfill) will discharge both leachate and contact stormwater. The estimated leachate discharge is based on the HELP model, and the contact stormwater discharge estimate is based on hydrologic modeling both prepared by and published by Golder Associates within the FFCP Management Facility Solid Waste Permit (SWP) No. 609. The discharge pipe for the contact stormwater for this facility will be directed to the LVWWTS via the FGD Yard Sumps discharge pipe. The leachate will be directed either through the FGD wastewater treatment plant or a separate metals treatment facility, as needed, and then to LVWWTS via the FGD Yard Sump discharge pipe system.

2.1.2.9 Fly Ash Silo Facility

The Fly Ash Silo Facility will discharge contact stormwater into a local sump containing two (2) 400 gallons per minute pumps. The sump is approximately 343,000 gallons and is designed to contain a 25-year, 24-hour storm event. The stormwater will be pumped from the sump into the same discharge line as the FFCP Management Facility, which will be directed to the LVWWTS via the FGD Yard Sump discharge pipe system.

2.1.2.10 Total Generation

Based on the wastewater inputs described above, a summary of the wastewater generation input flows is provided in **Table 6** below.

Table 6: Wastewater Generation Summary

Description	Average Daily Flow (MGD)	Stormwater Flow (MGD)	Remarks
Master Sump	2.72	3.6	See Tables 4 and 5
S-Ditch Pumps	N/A	N/A	Not applicable since this input is intermittent.
FGD Yard Sumps	1.07	1.7	See Tables 4 and 5
FGD WWTP	0.11	N/A	See Table 4
FFCP Management Facility	0.08	0.4	Determined from Golder Associates Data published in SWP No. 609
LAP Toe Drain	0.20	N/A	Based on Pump Rates
UAP Toe Drain	0.20	N/A	Based on Pump Rates
Coal Pile Runoff	N/A	2.4	See Table 5
Fly Ash Silo Facility	N/A	0.4	Based on anticipated contact stormwater containment volume
Total:	**4.38MGD**	**8.5MGD**	

The total average daily volume is estimated to be approximately 4.38 million gallons per day or **3,042 gallons per minute**. The daily maximum average volume is the total of the estimated stormwater flow from a 25 year, 24-hour storm event and the estimated average daily volume. The resultant maximum daily average flow rate is **8,945 gallons per minute**.

It should be noted that the flow volume estimates above are based on measured daily averages; however, instantaneous pumping outputs could have higher flowrates for periods of time. Pump information for the FGD Yard Sumps and the Master Sump, along with other proposed pumps being installed with the LVWWTS is provided below in **Table 7**.

Table 7: Pump Flowrate Summary

Pump Location	Flowrate
FGD Yard Sump	17,500 gpm
Master Sump	12,000 gpm
Coal Pile Runoff	250 gpm
Lower Ash Pond Toe Drain	275 gpm
Upper Ash Pond Toe Drain	275gpm
FGD WWTP	300 gpm
Landfill Leachate	1,300 gpm
Landfill Contact Stormwater	275 gpm
Fly Ash Silo Area	800 gpm
Total:	**32,975 gpm**

The maximum anticipated flow rate of 32,975 gallons per minute was used to check the hydraulic capacity at critical points in the system.

2.1.3 Sample Collection Methodology

Representative samples for chemical analysis were collected for each process or stormwater stream anticipated to discharge through the LVWWTS, including discharges from the Master Sump, the FGD wastewater treatment plant, FGD Yard Sumps, Metal Cleaning Waste Treatment Basin, and UAP toe drains, as well as stormwater runoff from the S-Ditch and coal pile runoff. Multiple samples were collected for each discharge except for the Metal Cleaning Waste Treatment Basin discharge. Due to the consistency of the discharge characteristics and the highly intermittent nature of the discharge, one sample was collected of the Metal Cleaning Waste Treatment Basin discharge. Samples representative of the FFCP landfill leachate were produced using a leachate column procedure and representative ash samples.

The intermittent nature of the process water discharges and stormwater runoff meant that grab sample collection was the most reliable means of sample collection. Field parameters, such as pH, dissolved oxygen, oxidation-reduction potential, conductivity, conductance, and temperature, were measured in the field at the time of sample collection.

The samples, except for the leachate column samples, were tested and logged at Test America in Pittsburgh, Pennsylvania. Leachate column test samples were tested and logged at Air, Water, & Soil Laboratories, Inc. in Richmond, Virginia.

A complete list of all the samples and the resultant concentrations were included in the VPDES permit application package.

2.2 Design Approach and Methods

2.2.1 Hydraulic Effluent Limitations

The discharge point for the LVWWTS is internal Outfall 301, a new outfall that will be located in the existing Thermal Channel up-gradient from existing Outfall 003. The hydraulic effluent limitation for this internal outfall is a maximum daily flow of 6 million gallons per day in accordance with the Station's VPDES permit. The effluent from the LVWWTS will not exceed this value and will be monitored by the Station and controlled at the outfall accordingly. Internally, the LVWWTS will manage variable flow rates through equalization within the system.

As discussed in **Section 2.1** above, the process water existing flows were measured in the field, and the stormwater runoff contribution was estimated hydrologically using a 25-year, 24-hour storm event. Other design criteria were based on Station operational requirements, and will be discussed in the following sections. For the purpose of this evaluation, the LVWWTS will be sized considering the average daily volume of process water of 4.38 million gallons per day, with a maximum average daily volume of 12.9 million gallons considering both the average daily process volume and the design storm event.

2.2.2 Facility Siting

Site locations for the LVWWTS were limited at the Station due to the number of projects and plans associated with the integrated ash conversion goals at the Station. The majority of the Station wastewater streams are currently routed to the LAP for discharge through existing Outfall 004. Therefore, the logical location for the LVWWTS would be in the vicinity of the LAP. However, the areas adjacent to the LAP are in the vicinity of environmentally sensitive areas (i.e. wetlands and flood plains), and therefore; higher ground was sought.

The final location of the new LVWWTS is an area of the Station property that has previously been used as a soil borrow area, with portions historically used as a shooting range. The higher ground afforded less impact to environmentally sensitive areas, was of sufficient size, and was void of existing utilities. In addition, the location is in the proximity of the Thermal Channel, thereby accommodating an efficient discharge location. Lastly, this area has already been disturbed with the majority of the vegetation removed during previous activities. The LVWWTS is comprised of many components, including the Coal Pile Runoff Basin, the EQ Basin, the Discharge Basin, and future treatment systems, as needed, that will be identified in future CER submittals. **Figure 1** depicts the locations of the various LVWWTS components.

2.2.3 General Wastewater Management Approach

Related to the facility siting is the discussion of equalization of the wastewater inputs prior to or after the future primary treatment scheme that will be covered in Phase 2. The resulting treatment scheme will likely require either an active management approach, or a more passive management approach. Given the geographical context of the site, available space, and future plans for the Station, space was very limited. A holding basin was needed prior to discharge to the Thermal Channel to ensure any upsets in the treatment scheme could be detained for a period of time and recirculated back through the primary treatment system, as needed. In addition, equalization prior to treatment allows for multiple wastewater inputs with varying flow rates and quality to be mixed and stabilized so that the flowrates and wastewater quality after equalization are more constant. The more stable and constant parameters allow for a plant operator to manage the treatment scheme passively, allowing the controls to adapt with minor changes over a longer period of time. Based on these requirements, the EQ Basin was included in the design to ensure that variable wastewater quality and flowrates are stabilized. In addition, the Discharge Basin was added to serve as a holding basin prior to discharge through Outfall 301. The Discharge Basin serves as a contingency element to control an inadvertent upset in the LVWWTS, if needed. During the Phase 1 portion of the project, the EQ Basin will be used to manage pH and TSS along with strategic management of the coal pile runoff as described further below.

2.2.4 Phase 1 Management of Wastewater

During the Phase 1 portion of the project, wastewater entering the LVWWTS and discharging through Outfall 301 will be required to meet the interim effluent limitations for Outfall 301. The EQ Basin will serve as the primary means to achieve the interim limits by using an operational wet volume to accommodate particle settling and pH stabilization. Calculations to determine the minimum and maximum operational wet volume levels required and pH adjustment parameters in the EQ Basin[3] will be developed during commissioning of the Phase 1 project and provided at a later date. During the interim period, the time between the initial commissioning of the EQ Basin and the implementation of Phase 2 of the project, the effluent of the EQ Basin will be monitored to ensure wastewater will achieve compliance with the interim effluent limitations at Outfall 301 in accordance with the permit requirements. It is expected that equalized wastewater from the Station (historically neutral pH and lower TSS) and targeted management of the coal pile runoff will achieve the interim effluent limitations without further treatment. During commissioning of the Phase 1 systems and prior to discharge through Outfall 301, additional treatability analysis will be conducted to determine if additional treatment is needed to ensure compliance with the effluent

[3] Please note that the wet volume operational conditions are only relevant for the EQ Basin. Although the Discharge Basin and the Coal Pile Basin have the potential for operational wet volumes to be maintained, those conditions are not being considered in the final design of the system.

limitations. A pilot treatment system for the coal pile runoff will also be implemented and operated, as needed, during Phase 1 to ensure compliance with the required effluent limitations.

Immediately after the commissioning period of the EQ Basin, while the effluent of the EQ Basin can still be discharged to the Lower Ash Pond (LAP), the EQ Basin effluent will be monitored to determine if the effluent meets the interim effluent limitations for Outfall 301. In the event the effluent does not achieve the required limitations, additional treatment measures will be implemented. These measures may include recirculation of the effluent to increase effective detention time and/or utilization of an active treatment system that will target pH and TSS. Typical pH and TSS adjustment, if needed, will use chemical additives already approved and in use at the Station, such as sulfuric acid or a 25% caustic solution. Any chemical additives utilized will be transported to the site in mobile totes or tankers and stored within secondary containment.

Once the effluent achieves the required permit limitations, the effluent will be directed to Outfall 301 for discharge.

2.2.5 LVWWTS Operational Requirements

In addition to the effluent limitations and other requirements established in the Station's VPDES permit, the Station has several operational requirements to ensure the LVWWTS is integrated efficiently into the overall Station operation. The dry volume required in the LVWWTS is 12,900,000 gallons, comprised of 8.5 million gallons of runoff from a 25-year, 24-hour storm event and 4.4 million gallons from 24 hours of average daily flows of 3,042 gallons per minute. The following subsections outline the operational requirements for each basin to meet the volume required.

2.2.5.1 Equalization (EQ) Basin

Information concerning the overall size, volume and detention time of the EQ basin is presented in the **Table 8** below. The EQ Basin design allows for adjustment of the detention time by setting the permanent pool at varying elevations. The maximum dry volume provided by the EQ Basin is 17,459,000 gallons, based on an assumed permanent pool volume of 8.8 million gallons. Additional treatability studies will be conducted during commissioning of the LVWWTS in order to establish the minimum permanent pool required to ensure compliance with discharge limitations.

Table 8: Overall Size, Volume, and Detention Time for EQ Basin

Basin	Surface Area [1] (acre)	Wet Volume [2] (gal)	Dry Volume [3] (gal)	Total Volume (gal)	Detention Time, T_D [4] (days)
EQ Basin	5.6	8,800,000	17,459,000	26,259,000	Min: 2
					Max: 6

Table Assumptions:

1. The surface area is based on the highest potential water surface elevation in the basin, elevation 44.0.
2. The wet volume (permanent pool volume) is based on an assumed 2-day detention time considering an average daily process water flow rate of 3,042 gallons per minute. Additional treatability analysis and testing will be conducted during the Phase 1 commissioning process to determine the minimum permanent pool requirements to equalize influent water prior to additional treatment or to settle out particles to achieve the effluent limitations.
3. The dry volume presented is the remainder of the volume left in the basin based on the wet volume of 8,800,000 gallons. The minimum dry volume needed to hold a 25-year storm event with no discharge from the EQ Basin is 12.9 million gallons. The minimum volume includes the estimated runoff from a 25-year storm event (8.5 million gallons) plus 24-hours of average daily flow rate of 3,042 gallons per minute (4.4 million gallons).
4. The minimum detention time is based on the wet volume of 8,800,000 gallons. The maximum is based on the permanent pool being set at the highest water surface elevation possible in the EQ Basin and discharged at the average daily flow rate.

See **Figure 3** for the proposed EQ Basin layout. Earthen structure profile drawings for the EQ Basin can be found on Drawings 65309-1C-C-021 and 65309-1C-C-021A in **Appendix B**.

A list of operational considerations that will be included in the EQ Basin design is provided below:

- The EQ Basin will serve as the primary equalization for the LVWWTS discharge, which will require both a wet volume to integrate the incoming wastewater into a less variable water quality stream and a surge volume to address the influx of wastewater during storm events.

- The EQ Basin will have multiple level pipe discharges similar to the Metal Cleaning Waste Treatment Basin configuration that will lead to a lift station. The lift station will be comprised of three (3) 3,000 gallons per minute pumps that will discharge to the down-gradient LVWWTS Discharge Basin. The multi-level pipe system will allow the Station to control the discharge.

- The EQ Basin will serve as the primary Oil and Grease (O&G) containment for the Station. Oil collection booms will be placed strategically within the EQ Basin sufficient to allow for the rise and fall of the water surface. The Station will remove and appropriately dispose of the O&G from the surface of the water, as needed.

- The EQ Basin will have the capacity to hold approximately two (2) days of surge capacity, which is approximately 12 million gallons (2 days at the maximum discharge rate to the Thermal Channel of 6 million gallons per day). Consequently, the wet volume will vary and along with it the residence time within the EQ Basin. The residence time will be adjusted, as needed, based on effluent readings to foster additional solids settling within the permanent pool.
- The EQ Basin controls will include motor operated slide gates located on the multi-level discharge pipes. These valves will control the wet volume (residence time) and surge capacity within the EQ Basin. The lift station pumps will be controlled remotely and will be operated based on the desired pumping rate using level indication within the EQ Basin and the lift station wet well area.
- The EQ Basin will be lined with a geomembrane with a concrete wear pad and driving surface at the bottom to facilitate cleaning. An under-liner drainage system will also be included to have the ability to remove any hydrostatic pressure due to high groundwater conditions, if experienced, and to monitor the presence of any potential under liner liquids. Construction details associated with the liner and underdrain systems for the EQ Basin can be found in **Appendix C**.

2.2.5.2 Discharge Basin

Information concerning the overall size, volume and detention time of the Discharge Basin is presented in **Table 9** below. The Station will be able to maintain a permanent pool at varying elevations in the Discharge Basin, if needed, as a back-up to the EQ Basin. However, the primary purpose of the basin will be to provide additional surge capacity within the LVWWTS; therefore, the basin's permanent pool could be maintained at the lowest elevation. The permanent pool at its lowest elevation is not being used for settling or treatment purposes, but rather as a means to prevent re-suspension of solids that incidentally settle within this basin. If the Discharge Basin is maintained at its minimum permanent pool, the basin will provide approximately 23,636,000 gallons of dry volume.

Table 9: Overall Size, Volume, and Detention Time for Discharge Basin

Basin	Surface Area [1] (acre)	Wet Volume [2] (gal)	Dry Volume [3] (gal)	Total Volume (gal)	Detention Time, T_D [4] (days)
Discharge Basin	5.0	1,854,000	23,636,000	25,490,000	Min: 0
					Max: 5

Table Assumptions:

1. The surface area is based on the highest potential water surface elevation in the basin, elevation 44.0.

2. The wet volume (permanent pool volume) is based on the volume below the lowest discharge pipe of the basin for both cells. The purpose of the permanent pool is to prevent re-suspension of solids that incidentally settle in the basin. No treatment or settling has been accounted for in this basin.
3. The dry volume is the remainder of the volume left in the basin based on the wet volume of 1,854,000 gallons. The Discharge Basin is designed to hold up to 5.4 days of average daily flow with no discharge through Outfall 301.
4. The minimum detention time is based on the wet volume of 1,854,000 gallons. In this case, the value is approximately 10 minutes. The maximum is based on the permanent pool being set at the highest water surface elevation possible in the Discharge Basin and discharged at the average daily flow rate.

See **Figure 4** for the proposed Discharge Basin layout. Earthen structure profile drawings for the Discharge Basin can be found on Drawing 65309-1B-C-015 in **Appendix B**.

A list of operational considerations that will be included in the Discharge Basin design is provided below:

- The Discharge Basin will have the ability to maintain an operational water level within the basin prior to discharge to Outfall 301. The Discharge Basin will also serve as an additional equalization basin to control larger storm events or larger volumes of operational discharges.
- The Discharge Basin will be subdivided with a partition berm. This provides flexibility on how the Discharge Basin is used and discharged.
- The Discharge Basin will have multiple level pipe discharges, which will allow the Station to control the discharge rate and the permanent pool elevation. Consequently, this results in the need for two sets of multilevel discharge pipe systems (one on each side of the partition) and a set of discharge vaults. The Discharge Basin controls will include motor operated slide gates located on the multi-level discharge pipes. These valves will control the wet volume (permanent pool) and surge capacity within the Discharge Basin. A minimal wet volume will be maintained within the Discharge Basin to allow for additional surge capacity in larger storm events or larger volumes of operational discharges above and beyond the available surge capacity in the EQ Basin.
- Recirculation from the Discharge Basin (either side of the partition berm) back to the EQ Basin is also included. A pump will be included in one of the discharge vaults with a recirculation pipe back to the EQ Basin inlet structure.
- The effluent system from the Discharge Basin will have a meter and a sampling location for VPDES permit compliance.

- The Discharge Basin will be designed to discharge the effluent from the basin into the Thermal Channel through an underwater diffuser structure.
- The Discharge Basin will be lined with a geomembrane with a concrete wear pad and driving surface at the bottom to facilitate cleaning. An under-liner drainage system will also be included to have the ability to remove any hydrostatic pressure due to high groundwater conditions, if experienced, and to monitor the presence of any potential under liner liquids. Construction details associated with the liner and underdrain systems of the Discharge Basin can be found in **Appendix C**.

2.2.5.3 Coal Pile Runoff Basin

Information concerning the overall size, volume and retention time of the Coal Pile Runoff Basin is presented in **Table 10** below. The Coal Pile Runoff Basin has been designed to hydraulically pass the estimated runoff from a 25-year, 24-hour storm event. The Coal Pile Runoff Basin will provide 2,453,000 gallons of dry volume, assuming the pond is empty. The basin will be pumped down using a duplex pump station with a single pump rate of 250 gallons per minute. Although a permanent pool could be maintained in the basin for short periods of time, the primary mode of operation will be to remove the water from the basin after large storm events. The time it takes to completely pump the water from the basin after a design storm event is shown in **Table 10** below as the Retention Time, T_D.

Table 10: Overall Size, Volume, and Detention Time for Coal Pile Runoff Basin

Basin	Surface Area [1] (acre)	Wet Volume [2] (gal)	Dry Volume [3] (gal)	Total Volume (gal)	Retention Time, T_D [4] (days)
Coal Pile Runoff Basin	0.9	0	2,453,000	2,453,000	6.8

Table Assumptions:

1. The surface area is based on the highest potential water surface elevation in the basin, elevation 23.0.
2. A permanent pool could be maintained in this basin; however, it was not accounted for regarding treatment or settling solids. It is expected that the basin will be pumped dry after a storm event.
3. The dry volume is the same as the total volume of the basin and will be used to contain the design storm.
4. The retention time is based on a full basin being pumped at 250 gallons per minute.

See **Figure 5** for the proposed Coal Pile Runoff Basin layout. Earthen structure profile drawings for the Coal Pile Runoff Basin can be found on Drawing 65309-1A-C-017 in

Appendix B. For identification of pipes, pumps, pump rates, sizing, etc., for the wastewater conveyed from the Coal Pile Runoff Basin to the LVWWTS, please see the Process and Instrumentation Diagram in **Appendix D**.

A list of operational considerations that will be included in the Coal Pile Runoff Basin design is provided below:

- The Coal Pile Runoff Basin is being designed to hydraulically pass a 25-year, 24-hour storm event without engaging the emergency spillway. The basin will include a pump station with a duplex pump system.
- A sampling port will be included to obtain samples during a pumping event.
- A recirculation line will be plumbed off the force main to provide flexibility for adding agents or other settling additives, as needed, to allow for pre-treatment during the interim Phase 1 stage or future phases.
- Given the limited available space, the outfall for the Coal Pile Basin's emergency spillway will be a drainage inlet at the existing culvert outfall located at the coal pile, which is currently served by the existing coal pile sediment basin. The existing sediment basin discharges to a conveyance channel that leads to a stormwater outfall at the Thermal Channel.

Construction details associated with the liner and underdrain systems of the Coal Pile Basin can be found in **Appendix E.**

The maintenance and cleanout strategy for the Coal Pile Runoff Basin will include removing acquired sediment from the basin via equipment such as a front-end loader and dump trucks or equivalent. The current design incorporates an access ramp directly into the basin to accommodate periodic cleanings with a concrete base slab and fabric formed concrete side slopes. Since the basin will primarily be in a dewatered (or dewatering) state, visual inspections will be conducted periodically to determine if sediment levels are approaching the targeted clean out level of approximately 1,300 cubic yards.

2.2.5.4 Metal Cleaning Waste Treatment Basin

- The Metal Cleaning Waste Treatment Basin will be monitored in accordance with established effluent limitations for internal Outfall 303 in the Station's VPDES permit.
- The basic operation for the basin discharge will remain as it is currently operated via an existing sump and valve system. The existing butterfly valves will be opened so sediment will not be displaced outside of the basin. The existing sump will remain as part of the LVWWTS, however, a new larger connection pipe will be constructed to direct the discharge to a new adjacent lift station. The lift station will consist of two (2)

submersible pumps that will pump the discharge to the inlet of the EQ Basin. The pump system can be operated as a single pump or as a duplex pumping system.

- A sampling port will be included to obtain samples during a pumping event.

2.3 Pilot Treatment Systems and Contingency

Contingency has been planned into Phase 1 portions of the LVWWTS using recirculation systems and the ability to add mobile treatment systems, as needed.

2.3.1 Mobile Treatment System

Dominion will utilize a vendor to provide mobile treatment systems, as needed, to achieve the interim VPDES permit effluent limitations at internal Outfall 301. For the LVWWTS, a mobile treatment system would be placed, as needed, at a valve vault location adjacent to the EQ Basin. The mobile treatment system would then discharge via a temporary pipe or hose into the Discharge Basin prior to discharging through Outfall 301 or be recirculated back to the inlet of the EQ Basin.

2.3.2 Recirculation

Recirculation is part of the LVWWTS design in two locations: recirculation from the Discharge Basin back to the EQ Basin and recirculation from the outlet of the EQ Basin back to the inlet of the EQ Basin. Recirculation will be used, as needed, to provide additional residence time for solids settling in the EQ Basin or to send effluent from the Discharge Basin back to the EQ Basin or a mobile treatment system for additional treatment, as needed.

3. PHASE 2 OF LVWWTS (placeholder for future submittal)

4. PHASE 3 OF LVWWTS (placeholder for future submittal)

FIGURES

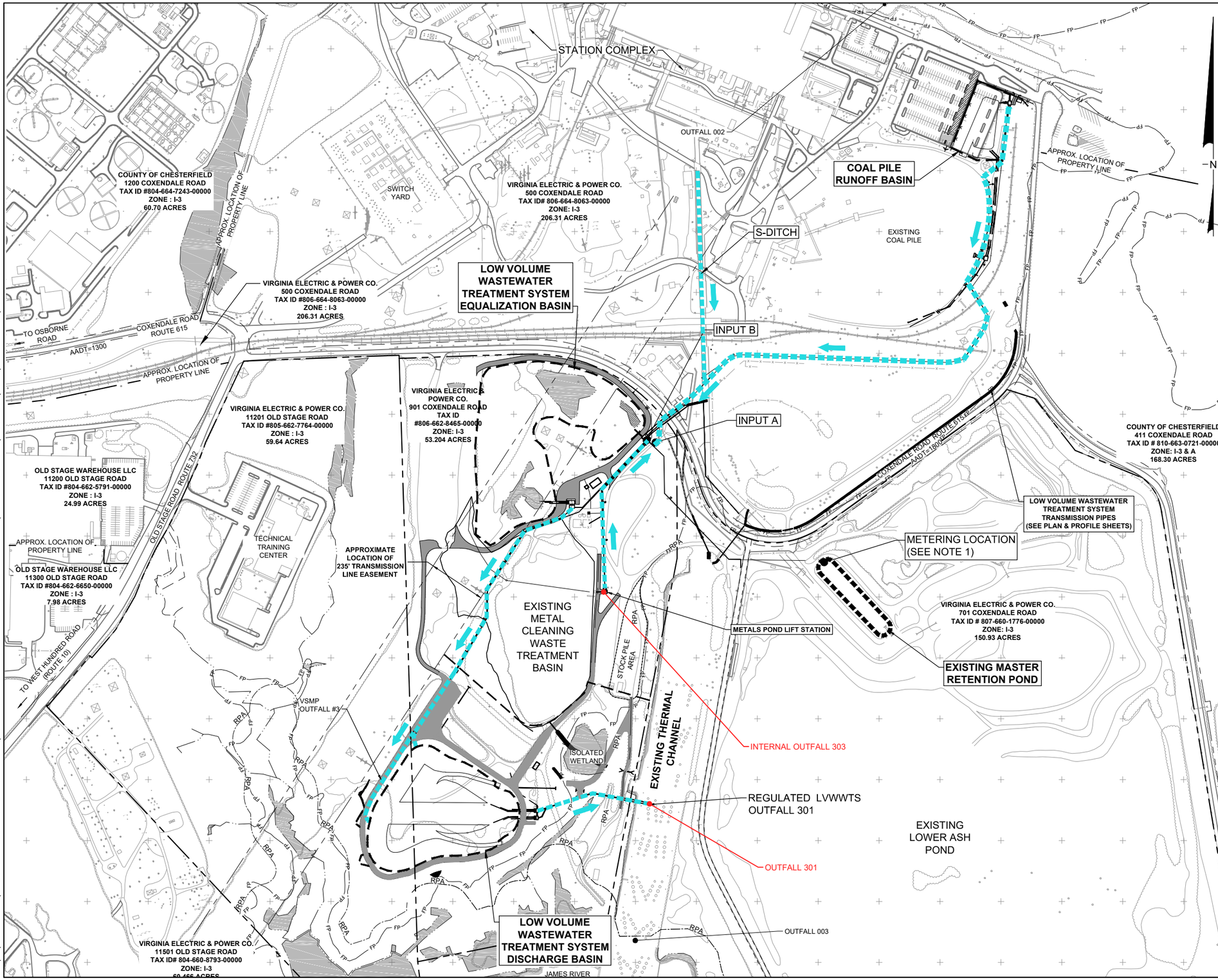

INPUT A: INCLUDES THE FGD YARD SUMP, THE MASTER SUMP (WITH AN EMERGENCY PIPE), LANDFILL LEACHATE AND CONTACT STORMWATER, AND FGD WWTP. ALL THESE INPUTS TO THE LVWWTS ORIGINATE WITHIN THE STATION COMPLEX.

INPUT B: INCLUDES THE METAL CLEANING WASTE TREATMENT BASIN, THE COAL PILE RUNOFF BASIN, THE UPPER ASH POND TOE DRAINS, AND THE LOWER ASH POND TOE DRAINS. ALL THESE INPUTS TO THE LVWWTS ORIGINATE FROM SOURCES OUTSIDE THE STATION COMPLEX.

NOTE:

1. THE METERING LOCATION IS AT THE INLET OF THE EXISTING MASTER RETENTION POND. DATA WAS COLLECTED AT THE MASTER AND FGD YARD SUMP DISCHARGES.

LEGEND

LVWWTS PIPE CONVEYANCE

DIRECTION OF FLOW

0 400' 800'

SCALE IN FEET

Dominion

CHESTERFIELD POWER STATION
LVWWTS - PHASE 1
OUTFALL LOCATIONS
VPDES PERMIT NO. VA0004146

Geosyntec consultants

FIGURE 1

PROJECT NO: MV1372 | APRIL 2017

L:\D\DOMINION\CHESTERFIELD POWER STATION\LOW VOLUME WASTEWATER SYSTEM MV1372\CONSTRUCTION\FIGURES\CER\2017.01.19\1372F001

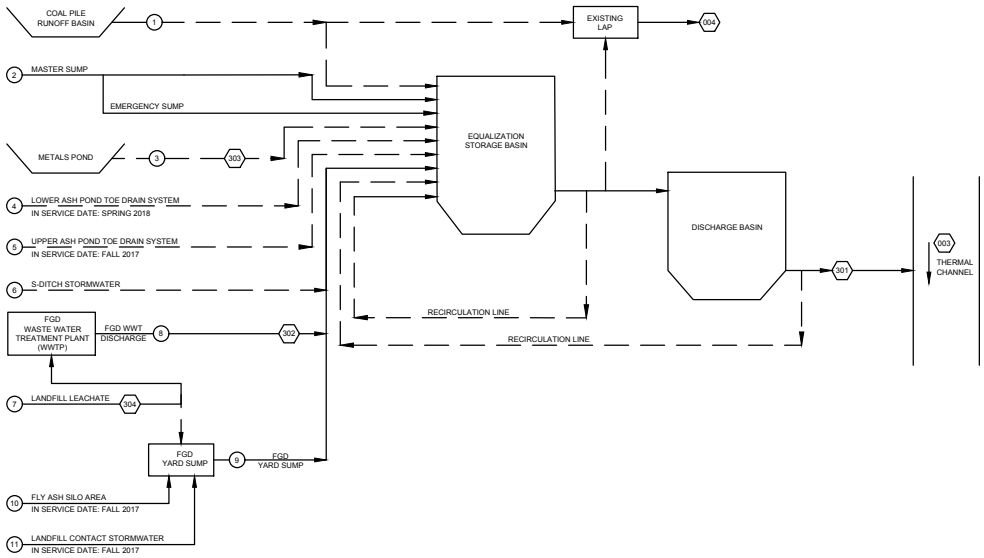

LEGEND

- INTERMITTENT FLOW
- CONTINUOUS FLOW
- (1) WASTEWATER INPUT (SEE TABLE)
- (301) REGULATED OUTFALL

REGULATED OUTFALL SUMMARY				
OUTFALL ID	MINIMUM (MGD)	AVERAGE (MGD)	MAXIMUM (MGD)	NOTES
003	57.28	N/A	N/A	THERMAL CHANNEL OUTFALL
004	N/A	N/A	22.23	LOWER ASH POND OUTFALL
301	N/A	4.30	6.00	LOW VOLUME WASTEWATER TREATMENT SYSTEM OUTFALL
302	N/A	0.11	0.35	FGD WASTEWATER TREATMENT PLANT OUTFALL
303	N/A	2.70	5.00	METALS POND OUTFALL
304	N/A	N/A	0.19	LANDFILL LEACHATE OUTFALL

ID	DESCRIPTION	PROCESS FLOW (MGD)		STORM FLOW (MGD)	NOTES
		AVG	MAX		
1	COAL PILE RUNOFF POND	N/A	N/A	2.4	18.8 ACRES; 25-YEAR STORM EVENT
2	MASTER SUMP	2.72	4.01	3.6	PROCESS FLOW - METERED BETWEEN 3/1/15 AND 6/1/15 STORM FLOW - 22.9 ACRES; 25-YEAR STORM EVENT
3	METALS POND	2.70	5.00	N/A	AVG BASED ON 8 DAY DRAINAGE MAX BASED ON 3 DAY DRAINAGE
4	LOWER ASH POND TOE DRAIN	0.20	0.40	N/A	PROCESS FLOW - 2 PUMPS @ 70 GPM (AVG.) 4 PUMPS @ 70 GPM (MAX.)
5	UPPER ASH POND TOE DRAIN	0.20	0.40	-	PROCESS FLOW - 2 PUMPS @ 70 GPM (AVG.) 4 PUMPS @ 70 GPM (MAX.)
6	S-DITCH STORMWATER SUMP	N/A	N/A	N/A	ONLY USED DURING A PIPE BREAK SCENARIO
7	LANDFILL LEACHATE	0.08	0.19	0.4	BASED ON PHASED BUILDOUT OF LANDFILL HELP MODEL
8	FGD WWT	0.11	0.35	N/A	METERED BETWEEN 3/1/15 AND 6/1/15
9	FGD YARD SUMP	1.07	3.36	1.7	PROCESS FLOW - METERED BETWEEN 3/1/15 AND 6/1/15 STORM FLOW - 10.8 ACRES; 25-YEAR STORM EVENT
10	FLY ASH SILO STORMWATER AREA	N/A	N/A	0.4	ESTIMATED RUNOFF FLOW
11	LANDFILL CONTACT STORMWATER	N/A	N/A	0.4	BASED ON LANDFILL PHASED HYDRAULIC MODEL FOR 25-YEAR, 24 HOUR STORM EVENT

NOTES:
1. THE PURPOSE OF THIS DRAWING IS TO PROVIDE A GENERAL FLOW DIAGRAM FOR THE PURPOSE OF UNDERSTANDING THE OVERALL TREATMENT SYSTEM. DETAILS ASSOCIATED WITH THIS SYSTEM WILL NOT APPEAR ON THIS DRAWING. PLEASE SEE THE PROCESS AND INSTRUMENTATION DIAGRAM FOR SPECIFIC DETAILS AS IT RELATES TO PIPE AND VALVES LOCATIONS AND MATERIALS.
2. HEAT TRACE REQUIREMENTS ARE NOT SHOWN ON THIS PLAN. HEAT TRACE REQUIREMENTS AND LOCATIONS ARE REFLECTED ON THE PROCESS AND INSTRUMENTATION DIAGRAM.

Dominion

PROCESS FLOW DIAGRAM

Geosyntec consultants

FIGURE 2

PROJECT NO: MV1372

JANUARY 2017

L:\D\DOMINION\CHESTERFIELD POWER STATION\LOW VOLUME WASTEWATER SYSTEM MV1372\CONSTRUCTION\FIGURES\CER\2017.01.19\1372F002

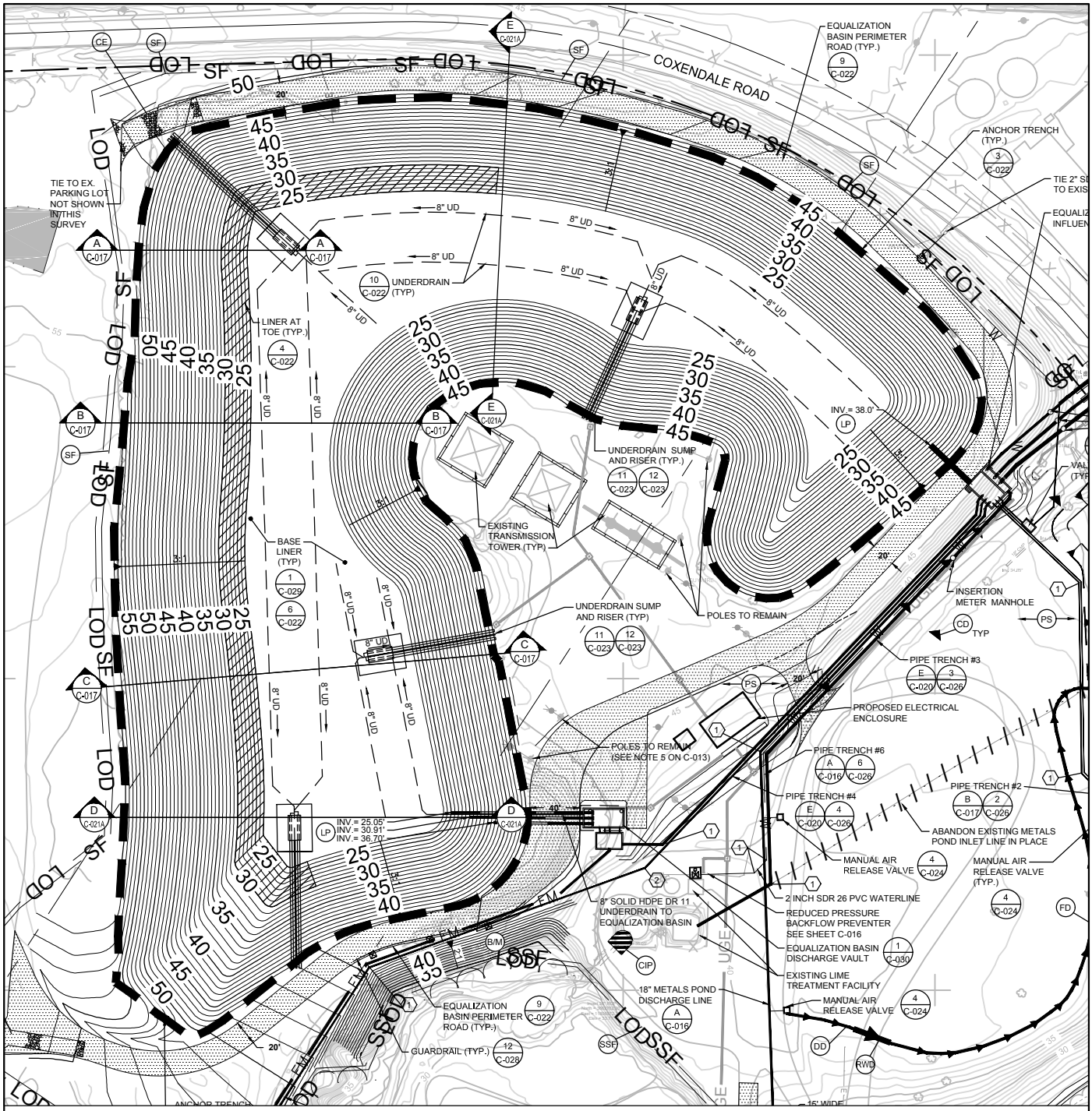

0 120' 240'

SCALE IN FEET

EQUALIZATION BASIN PLAN

Geosyntec consultants

FIGURE 3

PROJECT NO: MV1373

MAY 2017

L:\D\DOMINION\CHESTERFIELD POWER STATION\LOW VOLUME WASTEWATER SYSTEM MV1372\CONSTRUCTION\FIGURES\CER\F003-EQ BASIN PLAN

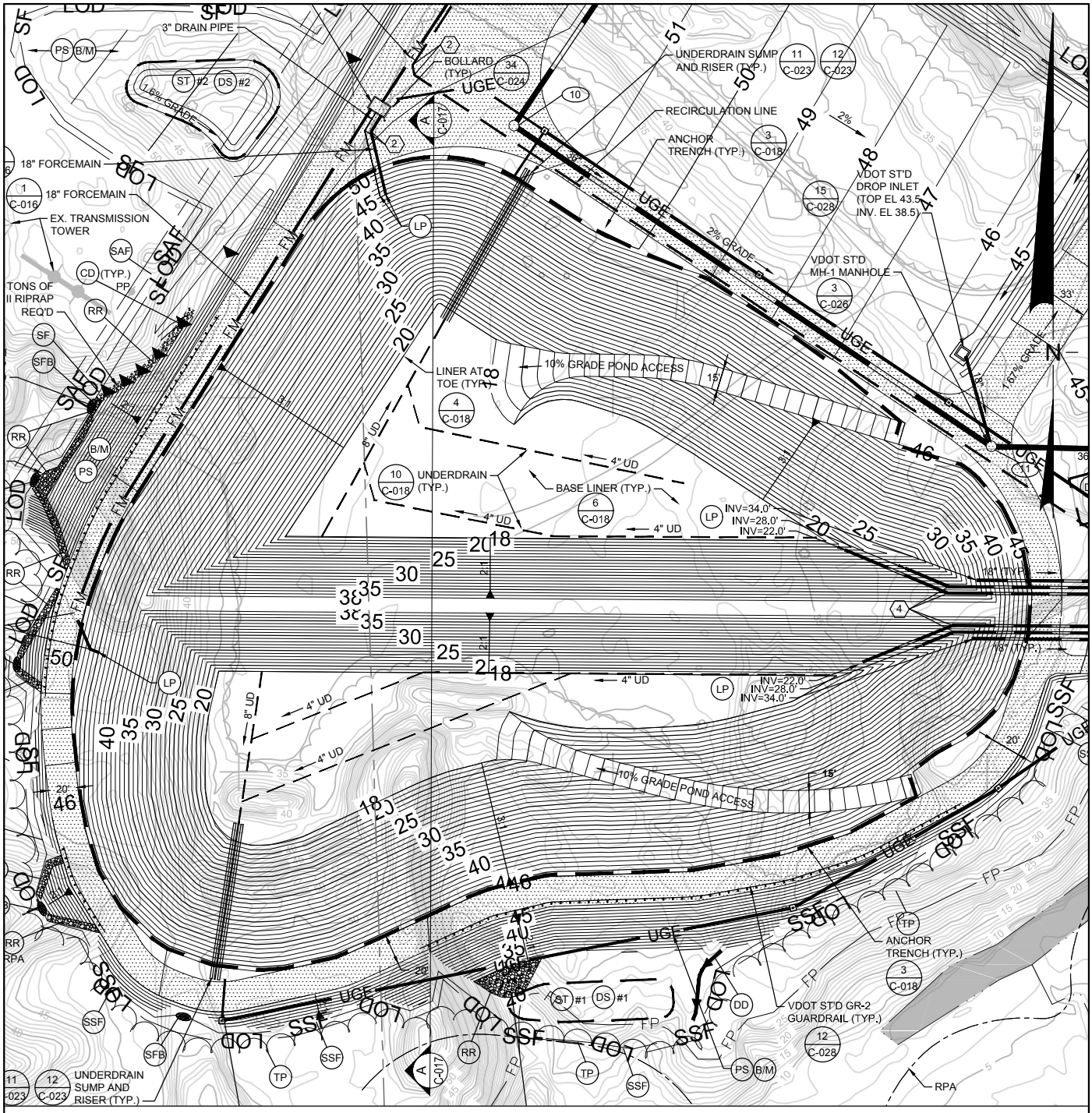

0 100' 200'

SCALE IN FEET

DISCHARGE BASIN PLAN

Geosyntec consultants

FIGURE 4

PROJECT NO: MV1373

MAY 2017

L:\D\DOMINION\CHESTERFIELD POWER STATION\LOW VOLUME WASTEWATER SYSTEM MV1372\CONSTRUCTION\FIGURES\CER\F004-DISCHARGE BASIN PLAN

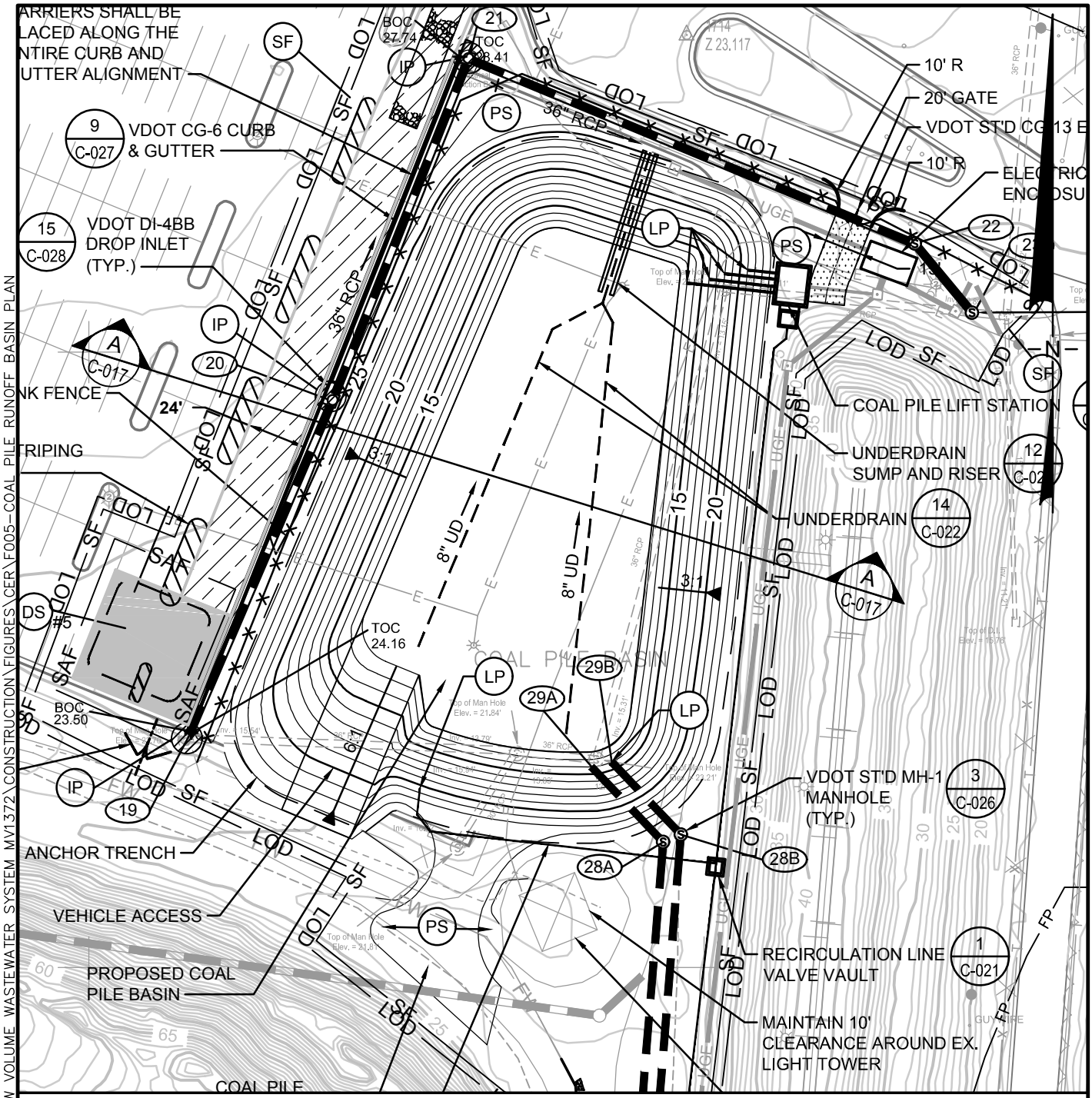

0 60' 120'

SCALE IN FEET

COAL PILE RUNOFF BASIN PLAN

Geosyntec consultants

FIGURE 5

PROJECT NO: MV1373

MAY 2017

L:\D\DOMINION\CHESTERFIELD POWER STATION\LOW VOLUME WASTEWATER SYSTEM MV1372\CONSTRUCTION\FIGURES\CER\F005-COAL PILE RUNOFF BASIN PLAN

APPENDIX A

Hydrological Calculations

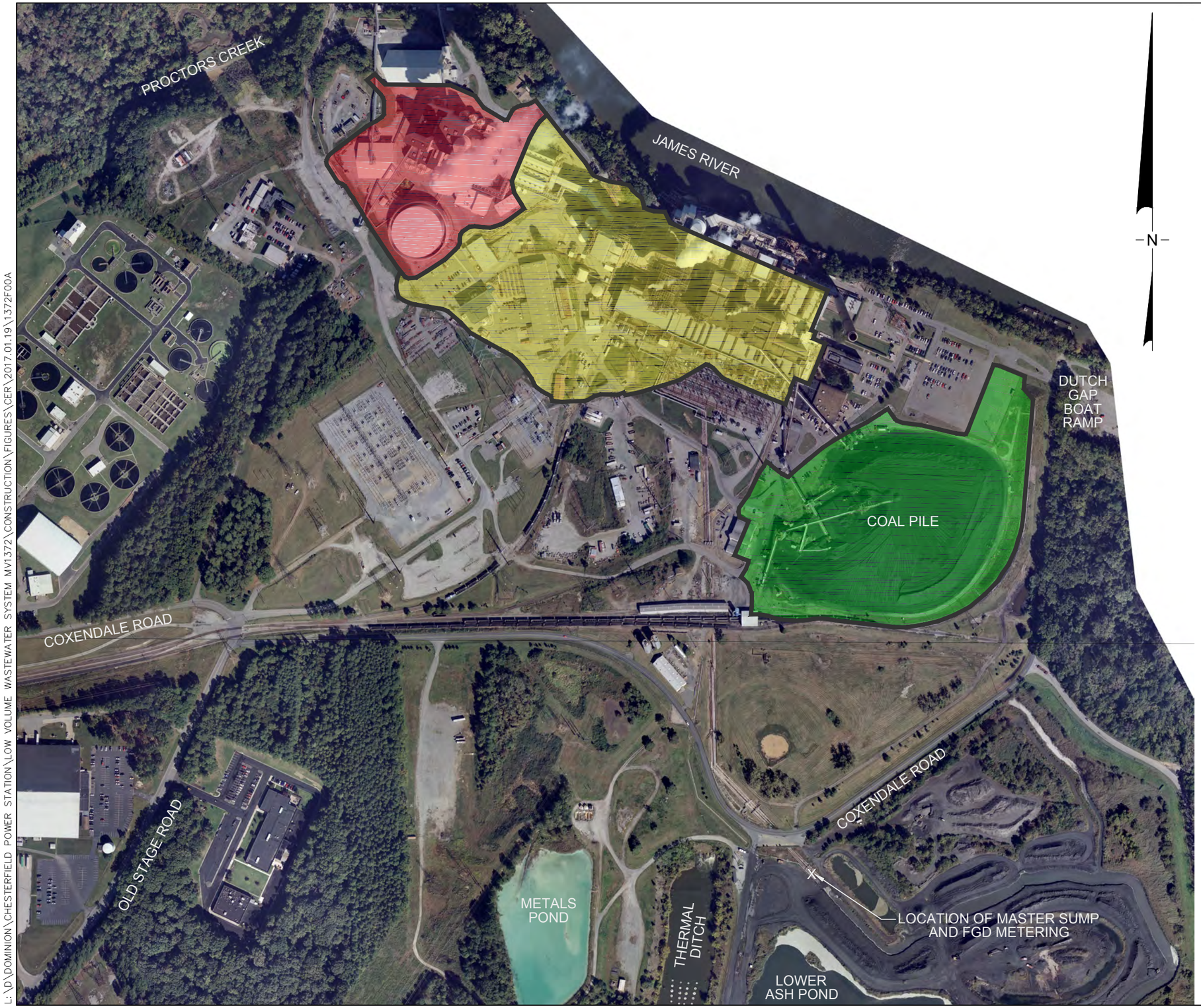

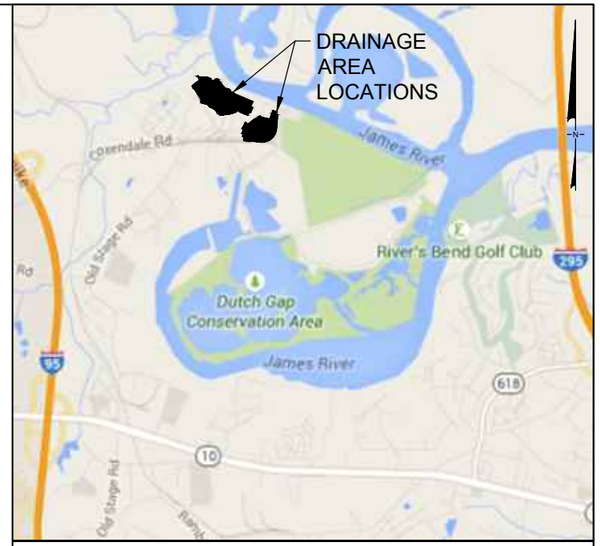

VICINITY MAP
SCALE 1"=5,000'

DRAINAGE AREA LEGEND

- FGD SUMP AREA (9.33 ACRES; 1.46 MG PER 25-YR STORM)
- MASTER SUMP AREA (22.87 ACRES; 3.57 MG PER 25-YR STORM)
- COAL PILE AREA (18.75 ACRES; 2.81 MG PER 25-YR STORM)

0 400' 800'
SCALE IN FEET

Dominion

FIGURE A
DRAINAGE AREA MAP
CHESTERFIELD POWER STATION
CHESTERFIELD COUNTY, VA

Geosyntec consultants

FIGURE A

PROJECT NO: MV1372 | JANUARY 2017

L:\D\DOMINION\CHESTERFIELD POWER STATION\LOW VOLUME WASTEWATER SYSTEM MV1372\CONSTRUCTION\FIGURES\CER\2017.01.19\1372F00A

Summary for Subcatchment 1S: FGD SUMP

Runoff = 88.24 cfs @ 11.99 hrs, Volume= 5.165 af, Depth= 5.74"

Runoff by SCS TR-20 method, UH=SCS, Weighted-CN, Time Span= 0.00-54.00 hrs, dt= 0.01 hrs
Type II 24-hr 25-Year Rainfall=6.10"

	Area (ac)	CN	Description
	1.190	89	<50% Grass cover, Poor, HSG D
*	9.600	98	Impervious Area, HSG D
	10.790	97	Weighted Average
	1.190		11.03% Pervious Area
	9.600		88.97% Impervious Area

Tc (min)	Length (feet)	Slope (ft/ft)	Velocity (ft/sec)	Capacity (cfs)	Description
2.7	200	0.0100	1.25		**Sheet Flow, SHEET FLOW** Smooth surfaces n= 0.011 P2= 3.50"
5.1	425	0.0047	1.39		**Shallow Concentrated Flow, SHALLOW CONCENTRATED FLOW** Paved Kv= 20.3 fps
7.8	625	Total			

Subcatchment 1S: FGD SUMP

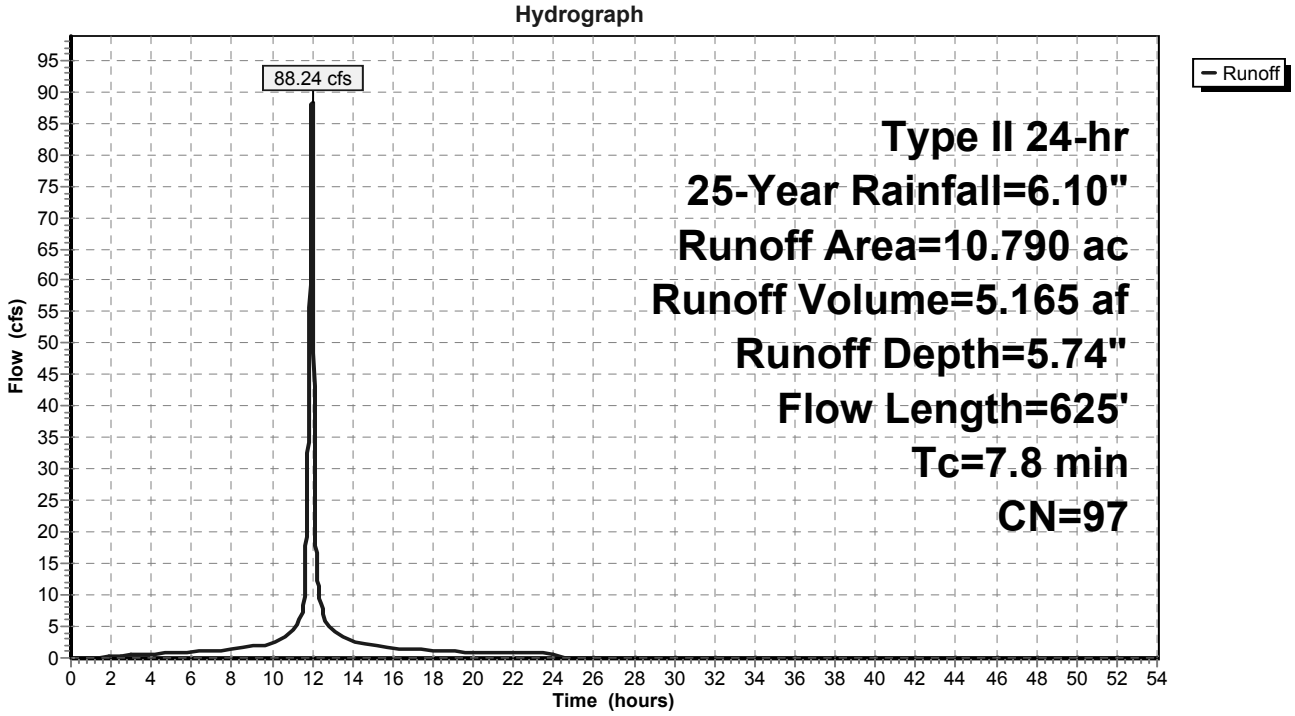

Summary for Subcatchment 2S: MASTER SUMP

Runoff = 194.24 cfs @ 11.97 hrs, Volume= 10.947 af, Depth= 5.74"

Runoff by SCS TR-20 method, UH=SCS, Weighted-CN, Time Span= 0.00-54.00 hrs, dt= 0.01 hrs
Type II 24-hr 25-Year Rainfall=6.10"

	Area (ac)	CN	Description
	1.580	89	<50% Grass cover, Poor, HSG D
*	21.290	98	Impervious Area, HSG D
	22.870	97	Weighted Average
	1.580		6.91% Pervious Area
	21.290		93.09% Impervious Area

Tc (min)	Length (feet)	Slope (ft/ft)	Velocity (ft/sec)	Capacity (cfs)	Description
1.7	200	0.0300	1.94		**Sheet Flow, SHEET FLOW** Smooth surfaces n= 0.011 P2= 3.50"
2.9	295	0.0068	1.67		**Shallow Concentrated Flow, SHALLOW CONCENTRATED FLOW** Paved Kv= 20.3 fps
2.0	875	0.0469	7.47	11.95	**Channel Flow, CHANNEL FLOW** Area= 1.6 sf Perim= 12.4' r= 0.13' n= 0.011 Concrete pipe, straight & clean
6.6	1,370	Total			

Subcatchment 2S: MASTER SUMP

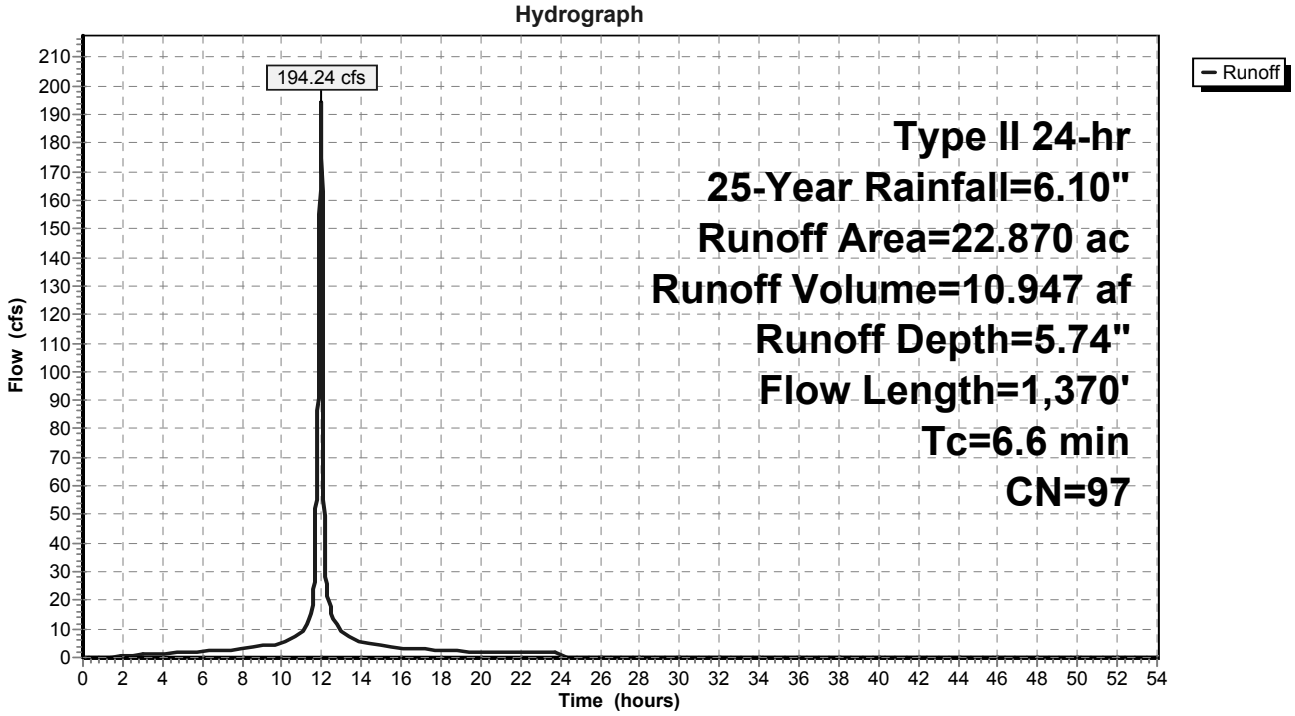

Summary for Subcatchment 3S: COAL PILE

Runoff = 99.12 cfs @ 12.10 hrs, Volume= 7.378 af, Depth= 4.72"

Runoff by SCS TR-20 method, UH=SCS, Weighted-CN, Time Span= 0.00-54.00 hrs, dt= 0.01 hrs
Type II 24-hr 25-Year Rainfall=6.10"

	Area (ac)	CN	Description
	2.720	89	<50% Grass cover, Poor, HSG D
*	12.190	85	Coal Ash, HSG D
*	3.840	98	Impervious Area, HSG D
	18.750	88	Weighted Average
	14.910		79.52% Pervious Area
	3.840		20.48% Impervious Area

Tc (min)	Length (feet)	Slope (ft/ft)	Velocity (ft/sec)	Capacity (cfs)	Description
14.8	200	0.0650	0.22		**Sheet Flow, SHEET FLOW** Grass: Dense n= 0.240 P2= 3.50"
0.9	190	0.1175	3.43		**Shallow Concentrated Flow, SHALLOW CONCENTRATED FLOW** Nearly Bare & Untilled Kv= 10.0 fps
2.5	790	0.0150	5.21	52.11	**Channel Flow, CHANNEL FLOW** Area= 10.0 sf Perim= 20.0' r= 0.50' n= 0.022
0.4	535	0.0224	19.85	389.79	**Pipe Channel, PIPE FLOW** 60.0" Round Area= 19.6 sf Perim= 15.7' r= 1.25' n= 0.013
18.6	1,715	Total			

Subcatchment 3S: COAL PILE

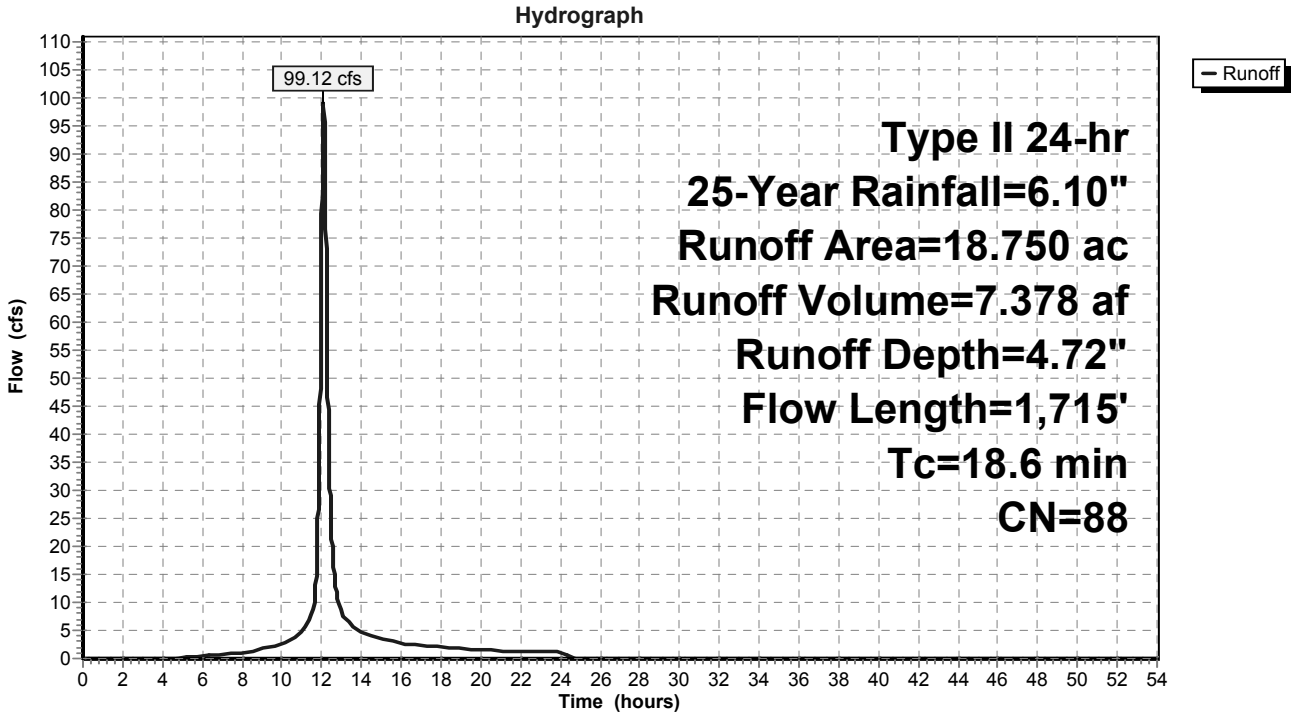

APPENDIX B

Section Drawings: All Basins

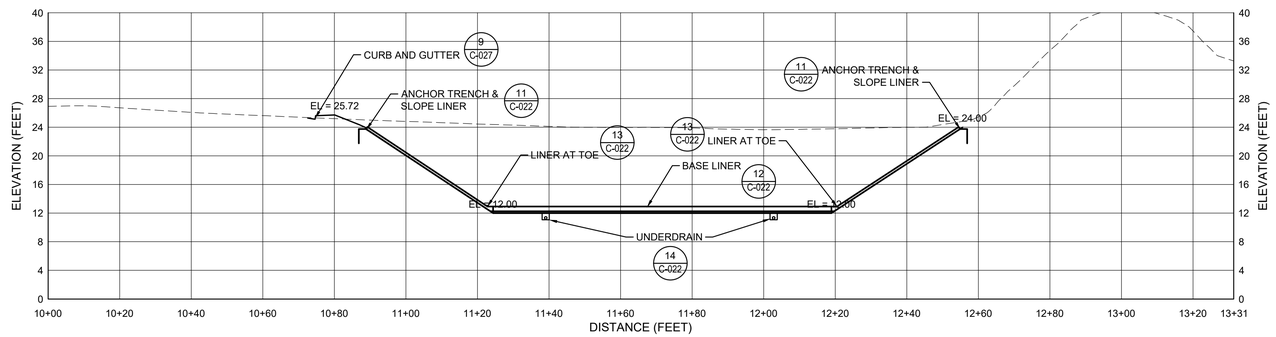

A
C-017

SECTION
COAL PILE BASIN

SCALE: HORIZ.: 1" = 1'; VERT.: 1" = 10'

0 20' 40'
SCALE IN FEET

CONSTRUCTION DRAWING

SITE PLAN #16PR0174
UTILITIES PROJECT #15-0348

Geosyntec consultants
9211 ARBORETUM PARKWAY, SUITE 200
RICHMOND, VA 23236 USA
PHONE: 804.767.2206

REV	DATE	DSGN	DRWN	CHKD	DSGN SUPV	PROJ ENGR	CIVIL ENGR	ELEC ENGR	MECH ENGR	ARCH	E.M. ENGR	I&C ENGR
0	07-15 2016		TAW	SKS		KEL	KEL					

ISSUED FOR CONSTRUCTION

DOMINION℠
POWER GENERATION ENGINEERING
RICHMOND, VIRGINIA

TYPICAL SECTIONS

LOW VOLUME WASTEWATER TREATMENT SYSTEM
CHESTERFIELD POWER STATION

DSGN KEL	DSGN SUPV SKS		
DRWN KEL	ENGR SUPV -	DRAWING NUMBER	REV.
CHKD SKS	PROJ ENGR -	65309-1A-C-017	0
DISPL ENGR KMH	SCALE: AS NOTED	UNLESS OTHERWISE NOTED	SH 17 OF 32

L:\DOMINION\CHESTERFIELD POWER STATION\LOW VOLUME WASTEWATER SYSTEM MV137\CONSTRUCTION\DRAWINGS\PLANS\PH 1A COAL PILE\65309-C-017_CP.DWG~10/4/2016~11:19:27 AM~Jim O'Connor

L:\DOMINION\CHESTERFIELD POWER STATION\LOW VOLUME WASTEWATER SYSTEM MV137\CONSTRUCTION\DRAWINGS\PLANS\PH 1A COAL PILE\65309-C-017_CP.dwg

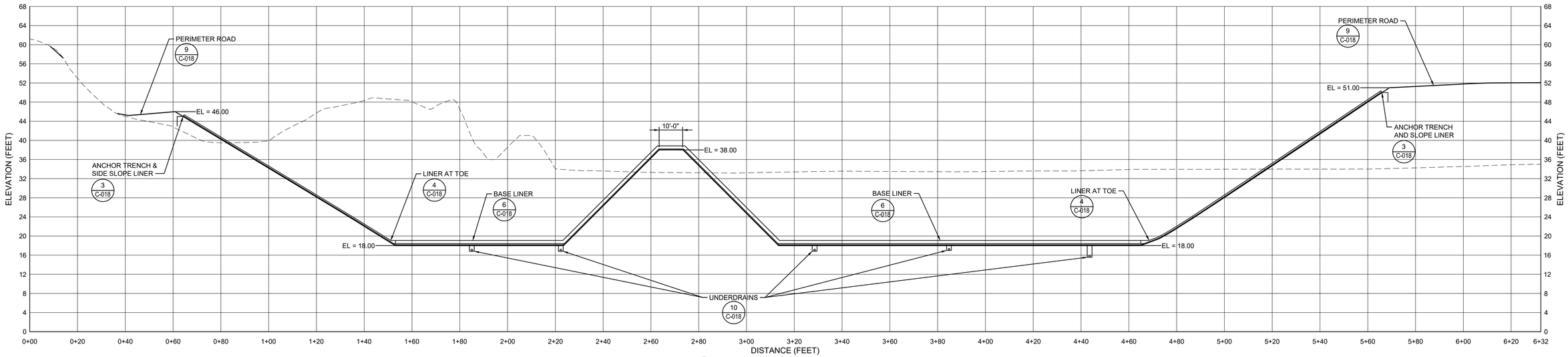

A / C-015 SECTION A

STORAGE BASIN

SCALE: HORIZ.: 1" = 20'; VERT.: 1" = 10'

0 20' 40'

SCALE IN FEET

CONSTRUCTION DRAWING

SITE PLAN #16PR0174
UTILITIES PROJECT #15-0348

Geosyntec consultants
9211 ARBORETUM PARKWAY, SUITE 200
RICHMOND, VA 23236 USA
PHONE: 804.767.2206

REV	DATE	DSGN	DRWN	CHKD	DSGN SUPV	PROJ ENGR	CIVIL ENGR	ELEC ENGR	MECH ENGR	ARCH	E.M. ENGR	I&C ENGR
0	07-29 2016		KEL	CJD		KEL	KEL					

ISSUED FOR CONSTRUCTION

DOMINION℠

POWER GENERATION ENGINEERING
RICHMOND, VIRGINIA

TYPICAL SECTIONS

LOW VOLUME WASTEWATER TREATMENT SYSTEM
CHESTERFIELD POWER STATION

DSGN KEL	DSGN SUPV SKS		
DRWN KEL	ENGR SUPV -	DRAWING NUMBER	REV.
CHKD SKS	PROJ ENGR -	65309-1B-C-015	0
DISPL ENGR KMH	SCALE: AS NOTED	UNLESS OTHERWISE NOTED	SH 15 OF 29

L:\DOMINION\CHESTERFIELD POWER STATION\LOW VOLUME WASTEWATER SYSTEM MV1372\CONSTRUCTION\DRAWINGS\PLANS\PH 1B DISCH BASIN\65309-C-015_DB.DWG-10/4/2016-4:41:17 PM--Jim O'Connor

L:\DOMINION\CHESTERFIELD POWER STATION\LOW VOLUME WASTEWATER SYSTEM MV1372\CONSTRUCTION\DRAWINGS\PLANS\PH 1B DISCH BASIN\65309-C-015_DB.dwg

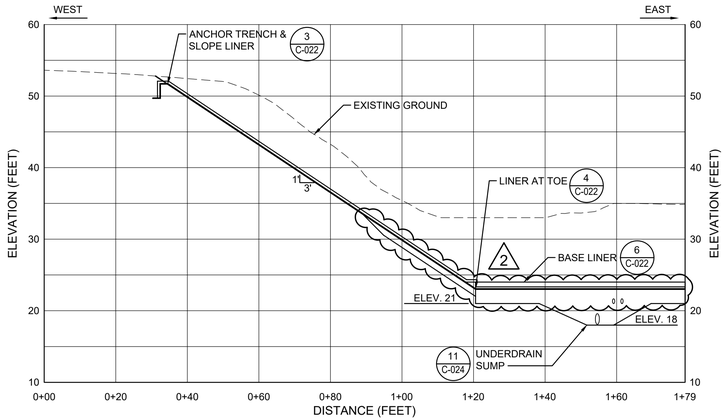

A C-021 SECTION A
EQUALIZATION BASIN
SCALE: HORIZ.: 1" = 20'; VERT.: 1" = 10'

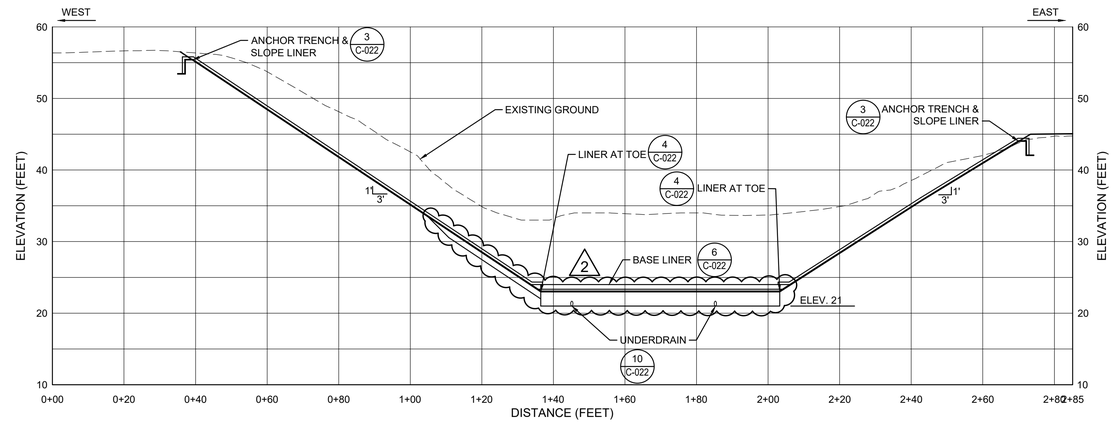

B C-021 SECTION B
EQUALIZATION BASIN
SCALE: HORIZ.: 1" = 20'; VERT.: 1" = 10'

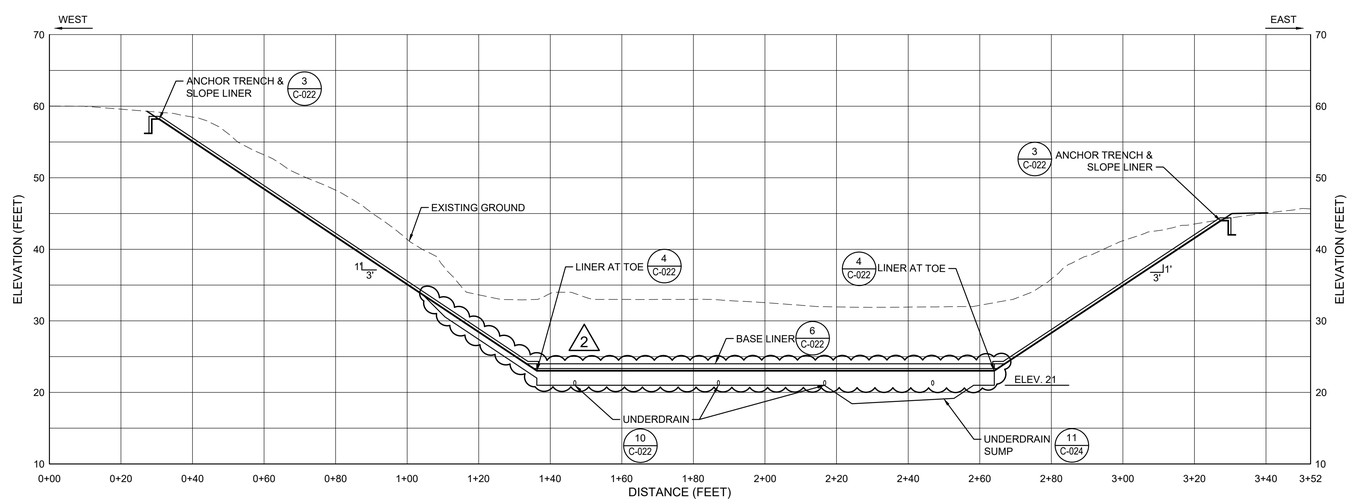

C C-021 SECTION C
EQUALIZATION BASIN
SCALE: HORIZ.: 1" = 20'; VERT.: 1" = 10'

1

0 20' 40'
HORIZONTAL SCALE: 1" = 20'

0 20' 40'
VERTICAL SCALE: 1" = 10'

CONSTRUCTION DRAWING

COMMONWEALTH OF VIRGINIA
KYLE E. LaCLAIR
Lic. No. 039540
4-18-17
PROFESSIONAL ENGINEER

SITE PLAN #16PR0174
UTILITIES PROJECT #15-0348

Geosyntec consultants
9211 ARBORETUM PARKWAY, SUITE 200
RICHMOND, VA 23236 USA
PHONE: 804.767.2206

DOMINION℠
POWER GENERATION ENGINEERING
RICHMOND, VIRGINIA

TYPICAL SECTIONS

LOW VOLUME WASTEWATER TREATMENT SYSTEM
CHESTERFIELD POWER STATION

REV	DATE	DSGN	DRWN	CHKD	DSGN SUPV	PROJ ENGR	CIVIL ENGR	ELEC ENGR	MECH ENGR	ARCH	E.M. ENGR	I&C ENGR	
2	04-17 2017	KEL	TAW	JEC		KEL	KEL						EQUALIZATION BASIN BOTTOM REVISED TO ELEV 23
1	03-30 2017	KEL	TAW	KEL		KEL							REVISED EQUALIZATION BASIN GRADING
0	09-30 2016		KEL	SKS		CMC	KEL						ISSUED FOR CONSTRUCTION

DSGN KEL	DSGN SUPV SKS		
DRWN KEL	ENGR SUPV -	DRAWING NUMBER	REV.
CHKD SKS	PROJ ENGR -	65309-1C-C-021	2
DISPL ENGR KMH	SCALE: AS NOTED	UNLESS OTHERWISE NOTED	SH 21 OF 36

L:\DSD\DOMINION\CHESTERFIELD POWER STATION\LOW VOLUME WASTEWATER SYSTEM MY13752\CONSTRUCTION\DRAWINGS\PLANS\PH 1C EQ BASIN\65309-C-021_EQB.DWG-4/18/2017-3:04:18 PM-Theresa Wanex

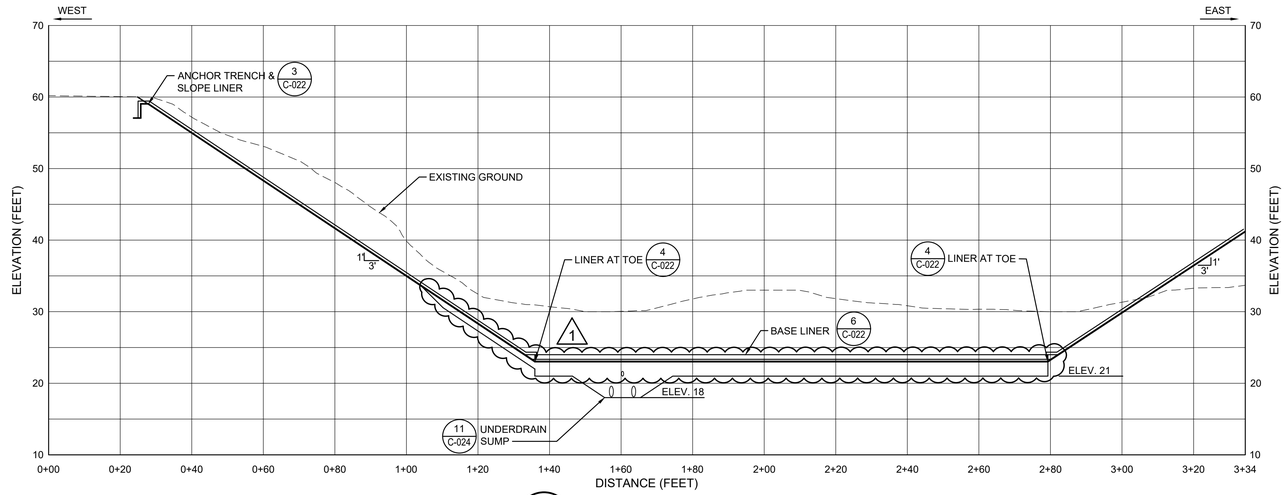

D C-021A SECTION D
EQUALIZATION BASIN
SCALE: HORIZ.: 1" = 20'; VERT.: 1" = 10'

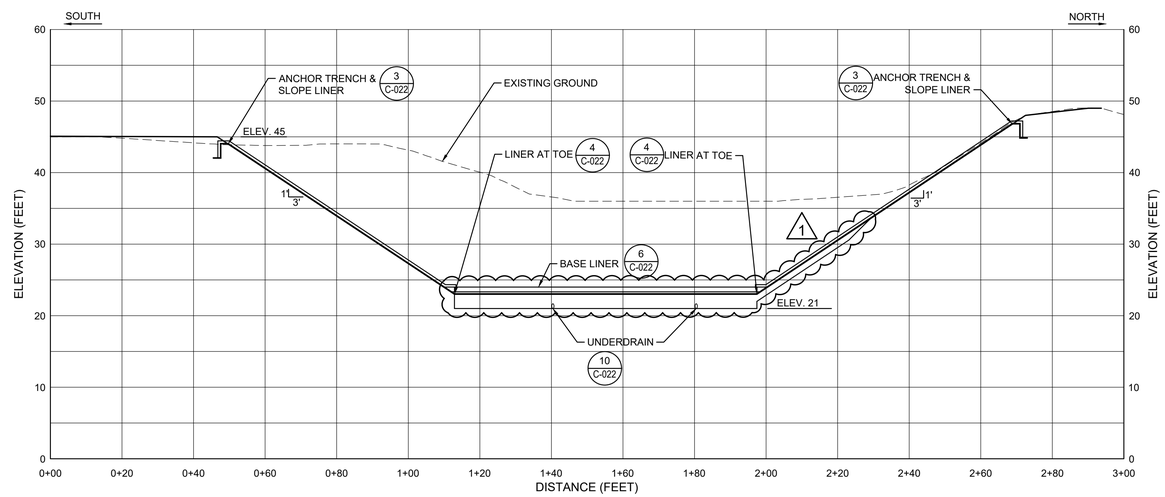

E C-021A SECTION E
EQUALIZATION BASIN
SCALE: HORIZ.: 1" = 20'; VERT.: 1" = 10'

HORIZONTAL SCALE: 1" = 20'

VERTICAL SCALE: 1" = 10'

CONSTRUCTION DRAWING

COMMONWEALTH OF VIRGINIA
KYLE E. LaCLAIR
Lic. No. 039540
4-18-17
PROFESSIONAL ENGINEER

SITE PLAN #16PR0174
UTILITIES PROJECT #15-0348

Geosyntec consultants
9211 ARBORETUM PARKWAY, SUITE 200
RICHMOND, VA 23236 USA
PHONE: 804.767.2206

DOMINION℠
POWER GENERATION ENGINEERING
RICHMOND, VIRGINIA

TYPICAL SECTIONS

LOW VOLUME WASTEWATER TREATMENT SYSTEM
CHESTERFIELD POWER STATION

REV	DATE	DSGN	DRWN	CHKD	DSGN SUPV	PROJ ENGR	CIVIL ENGR	ELEC ENGR	MECH ENGR	ARCH	E.M. ENGR	I&C ENGR	
1	04-17 2017	KEL	TAW	JEC		KEL	KEL						EQUALIZATION BASIN BOTTOM REVISED TO ELEV 23
0	03-30 2017	KEL	TAW	KEL			KEL						ISSUED FOR CONSTRUCTION

DSGN KEL	DSGN SUPV SKS		
DRWN TAW	ENGR SUPV -	DRAWING NUMBER	REV.
CHKD SKS	PROJ ENGR -	65309-1C-C-021A	1
DISPL ENGR KMH	SCALE: AS NOTED	UNLESS OTHERWISE NOTED	SH 21A OF 36

L:\DDOMINION\CHESTERFIELD POWER STATION\LOW VOLUME WASTEWATER SYSTEM MV372\CONSTRUCTION\DRAWINGS\PLANS-PH 1C EQ BASIN\65309-C-021_EQB.DWG-4/18/2017-3:03:56 PM-Theresa Warwick

APPENDIX C

Equalization Basin and Discharge Basin Liner and Underdrain System Drawings

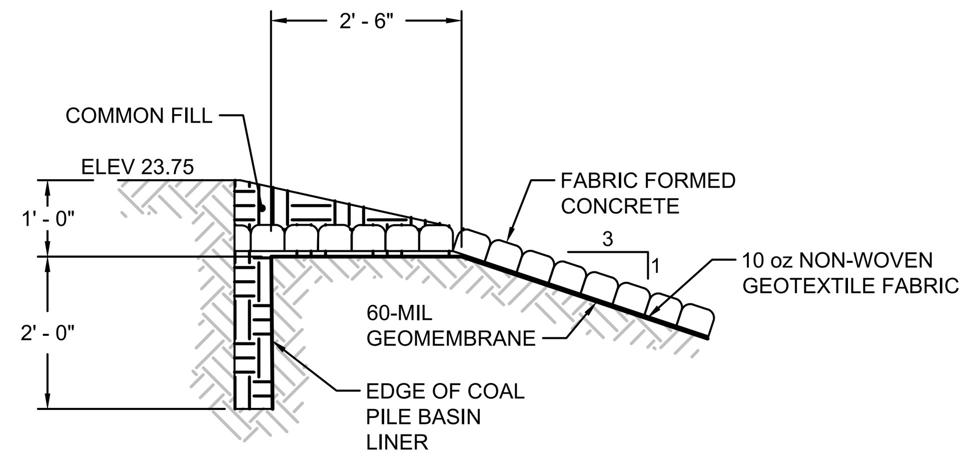

11 / C-022 DETAIL
COAL PILE BASIN - ANCHOR TRENCH & SLOPE LINER
SCALE: 1"=2'
XREF: 1222xDTL_COAL PILE ANCHR TRNCH

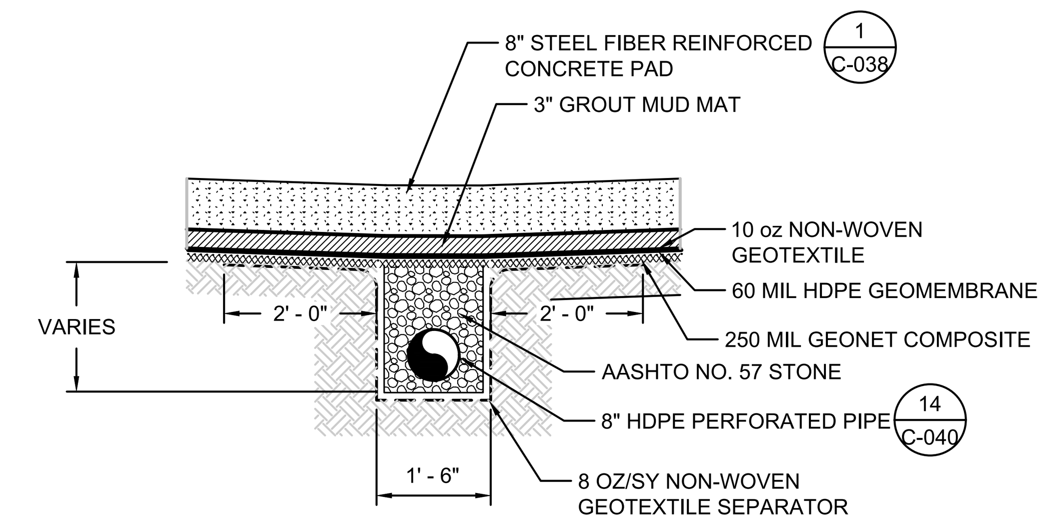

NOTE:
1. UNDERDRAIN SHALL BE BE SLOPED TO DRAIN TO THE SUMP

14 / C-022 DETAIL
COAL PILE BASIN - UNDERDRAIN
SCALE: 1"=2'
XREF: 1222xDTL_COAL PILE BASIN UD

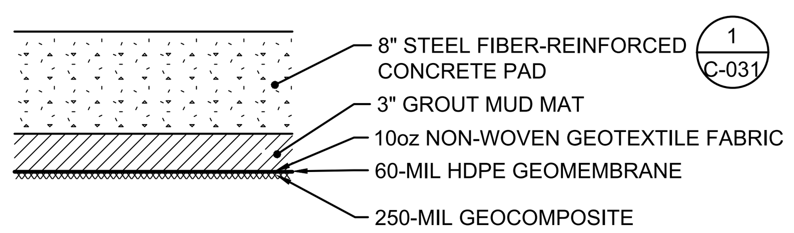

12 / C-022 DETAIL
COAL PILE BASIN - BASE LINER
SCALE: 1"=2'
XREF: 1222xDTL_COAL PILE BASE LINER

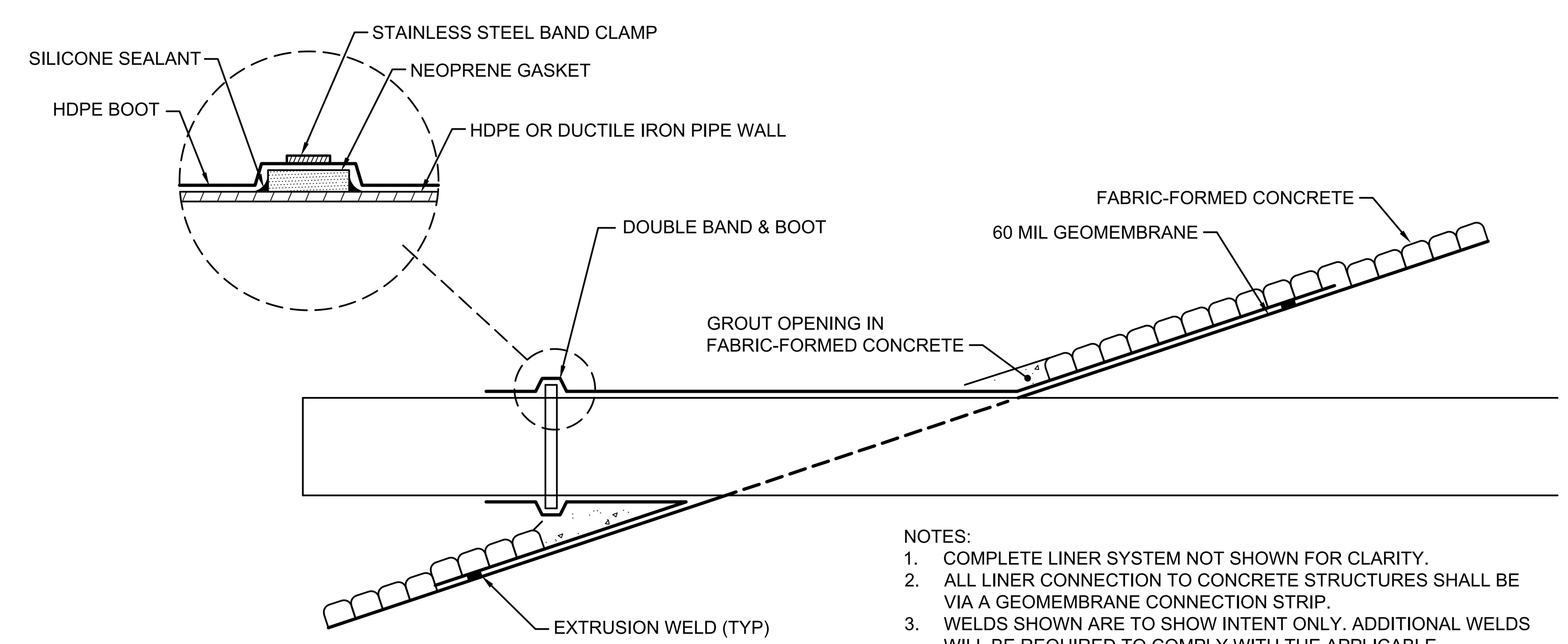

NOTES:
1. COMPLETE LINER SYSTEM NOT SHOWN FOR CLARITY.
2. ALL LINER CONNECTION TO CONCRETE STRUCTURES SHALL BE VIA A GEOMEMBRANE CONNECTION STRIP.
3. WELDS SHOWN ARE TO SHOW INTENT ONLY. ADDITIONAL WELDS WILL BE REQUIRED TO COMPLY WITH THE APPLICABLE SPECIFICATIONS.

16 / C-022 DETAIL
COAL PILE BASIN LINER PENETRATION
SCALE: 1"= 2'
XREF: 1222xDTL_COAL PILE LINER PENETRATION

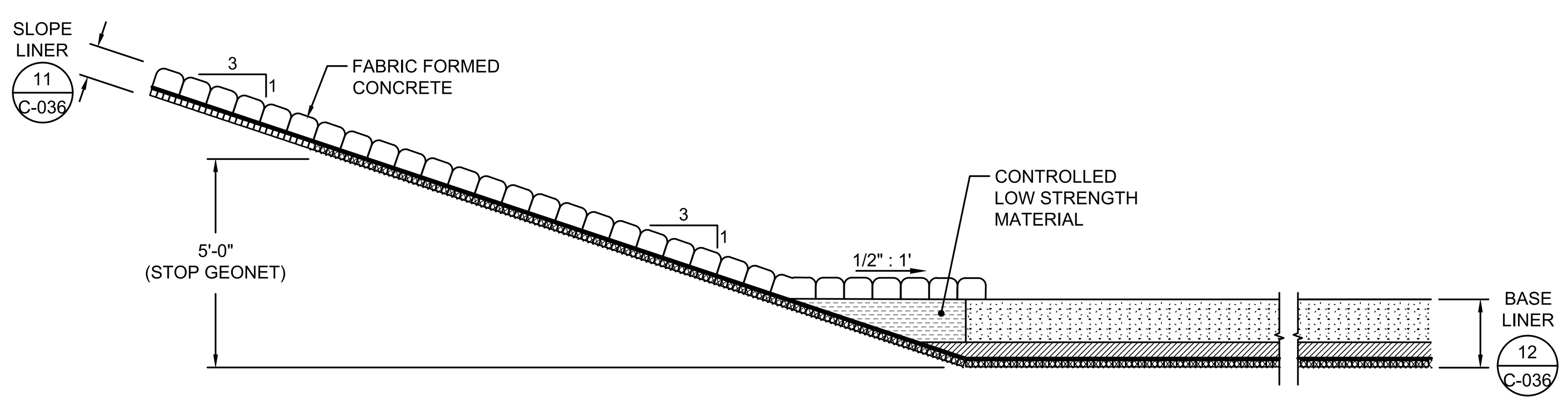

13 / C-022 DETAIL
COAL PILE BASIN - LINER AT TOE
SCALE: 1"=2'
XREF: 1222xDTL_COAL PILE LINER TOE

CONSTRUCTION DRAWING

SITE PLAN #16PR0174
UTILITIES PROJECT #15-0348

Geosyntec consultants
9211 ARBORETUM PARKWAY, SUITE 200
RICHMOND, VA 23236 USA
PHONE: 804.767.2206

DOMINION
POWER GENERATION ENGINEERING
RICHMOND, VIRGINIA

TYPICAL LINER DETAILS

LOW VOLUME WASTEWATER TREATMENT SYSTEM
CHESTERFIELD POWER STATION

REV	DATE	DSGN	DRWN	CHKD	DSGN SUPV	PROJ ENGR	CIVIL ENGR	ELEC ENGR	MECH ENGR	ARCH	E.M. ENGR	I&C ENGR	DESCRIPTION
0	07-15 2016		JOC	SKS			KEL						ISSUED FOR CONSTRUCTION

DSGN KEL	DSGN SUPV SKS		
DRWN JOC	ENGR SUPV -	DRAWING NUMBER 65309-1A-C-022	REV. 0
CHKD SKS	PROJ ENGR -		
DISPL ENGR KMH	SCALE: AS NOTED	UNLESS OTHERWISE NOTED	SH 22 OF 32

L:\DOMINION\CHESTERFIELD POWER STATION\LOW VOLUME WASTEWATER SYSTEM MV1372\CONSTRUCTION\DRAWINGS\PLANS-PH 1A COAL PILE\65309-C-022_CP.dwg

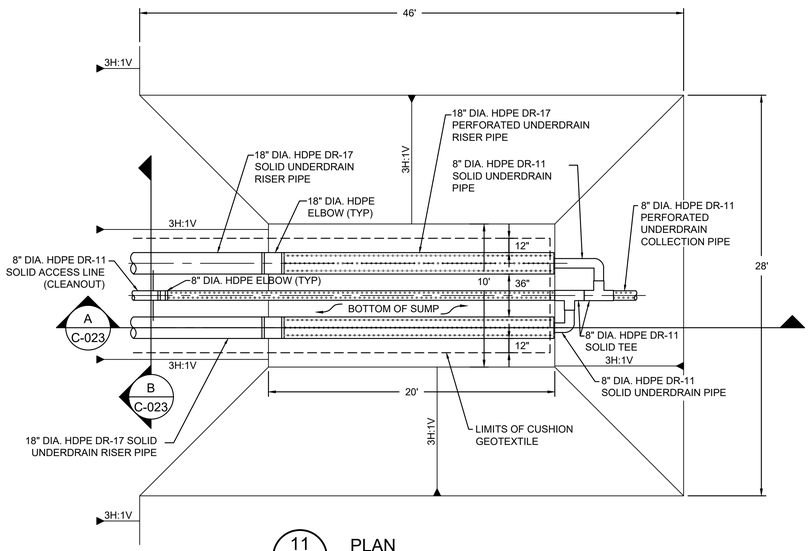

11 C-023 PLAN
UNDERDRAIN SUMP
SCALE: 1" = 5'

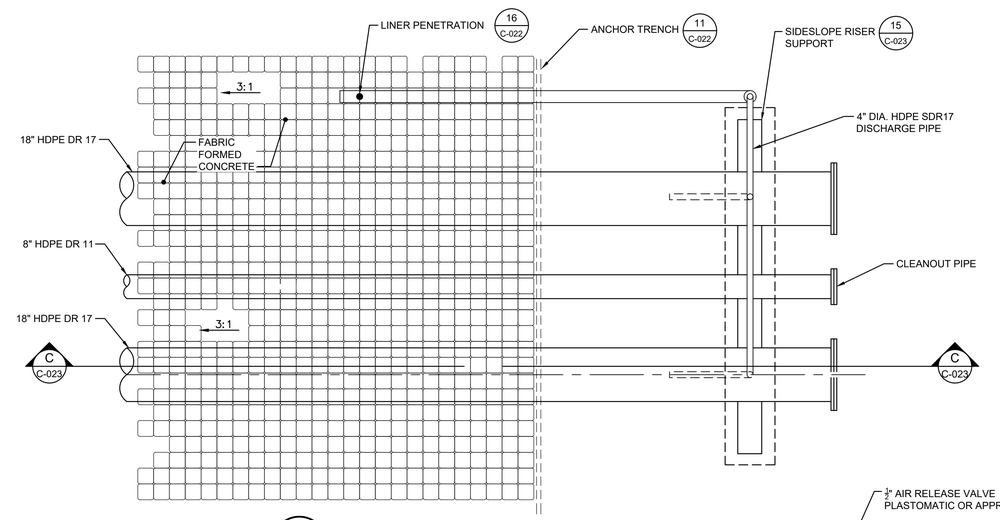

12 C-023 PLAN
RISER TERMINATION
SCALE: 1" = 2'

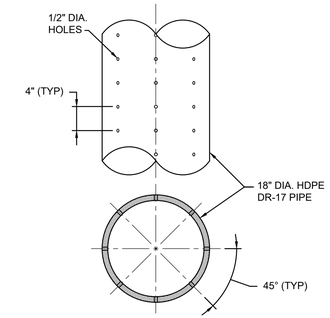

13 C-023 DETAIL
PERFORATED UNDERDRAIN RISER PIPE
SCALE: 1" = 1'
XREF: 1222xRISER PERF

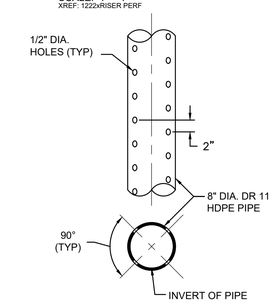

14 C-023 DETAIL
PERFORATED UNDERDRAIN COLLECTION PIPE
SCALE: 1" = 1'

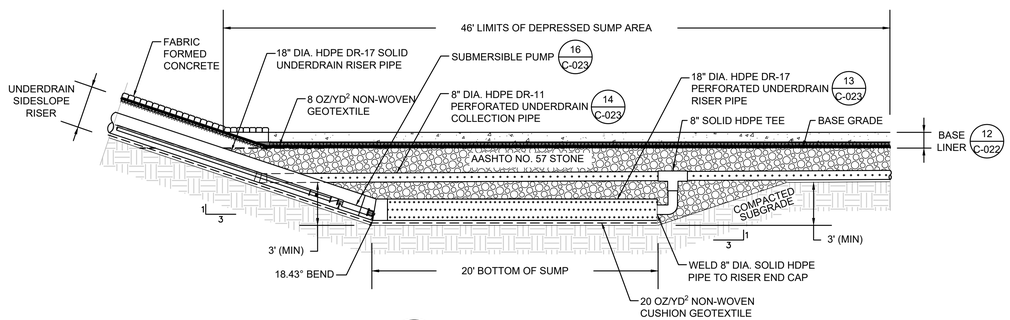

A C-023 SECTION
UNDERDRAIN SUMP
SCALE: 1" = 5'

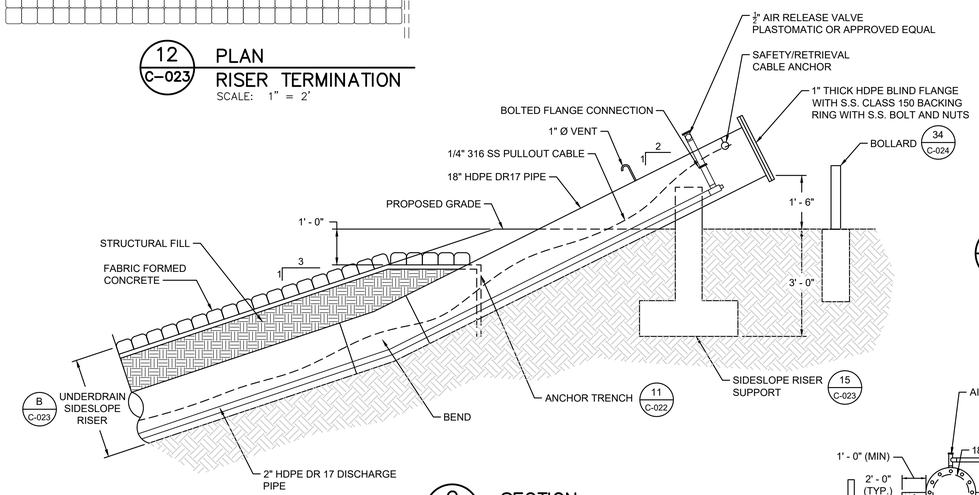

C C-023 SECTION
RISER TERMINATION
SCALE: 1" = 2'

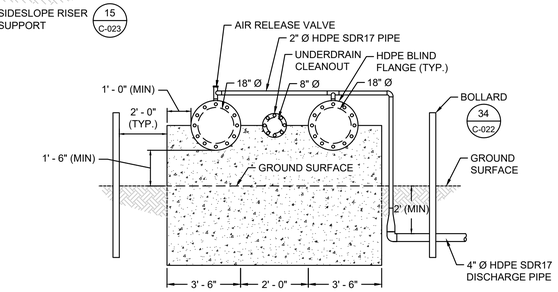

17 C-023 DETAIL
SIDESLOPE RISER SUPPORT
SCALE: 1" = 3'

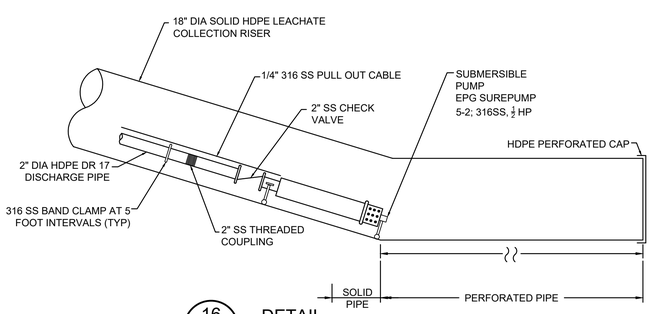

16 C-023 DETAIL
SUBMERSIBLE PUMP AT UNDERDRAIN SUMP
SCALE: N.T.S.

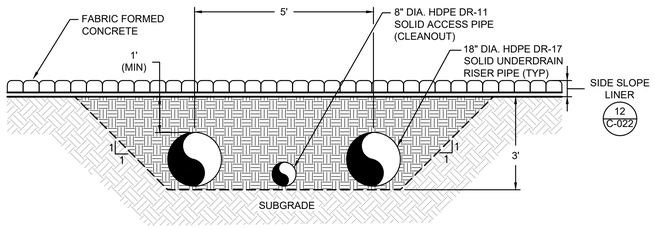

B C-023 SECTION
UNDERDRAIN SIDESLOPE RISER ON SLOPE
SCALE: 1" = 2'

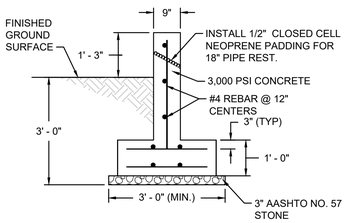

15 C-023 DETAIL
SIDESLOPE RISER SUPPORT
SCALE: 1" = 2'

CONSTRUCTION DRAWING

SITE PLAN #16PR0174
UTILITIES PROJECT #15-0348

Geosyntec consultants
9211 ARBORETUM PARKWAY, SUITE 200
RICHMOND, VA 23236 USA
PHONE: 804.767.2206

DOMINION℠
POWER GENERATION ENGINEERING
RICHMOND, VIRGINIA

UNDERDRAIN SUMP & RISER DETAILS

LOW VOLUME WASTEWATER TREATMENT SYSTEM
CHESTERFIELD POWER STATION

REV	DATE	DSGN	DRWN	CHKD	DSGN SUPV	PROJ ENGR	CIVIL ENGR	ELEC ENGR	MECH ENGR	ARCH	E.M. ENGR	I&C ENGR
0	07-15 2016		TAW	SKS		KEL	KEL					

ISSUED FOR CONSTRUCTION

DSGN KLC	DSGN SUPV SKS		
DRWN JOC	ENGR SUPV -	DRAWING NUMBER 65309-1A-C-023	REV. 0
CHKD SKS	PROJ ENGR -		
DISPL ENGR KMH	SCALE: AS NOTED	UNLESS OTHERWISE NOTED	SH 23 OF 32

L:\DOMINION\CHESTERFIELD POWER STATION\LOW VOLUME WASTEWATER SYSTEM MV1372\CONSTRUCTION\DRAWINGS\PLANS\PH 1A COAL PILE\65309-C-023_CP.DWG~1\04/29/16~11:56:36 AM~jeff O'Connor

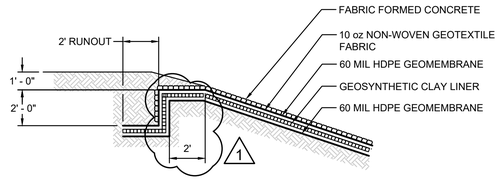

3 / C-022 DETAIL
EQUALIZATION BASIN - ANCHOR TRENCH AND SLOPE LINER
SCALE: 1"=4'
XREF:

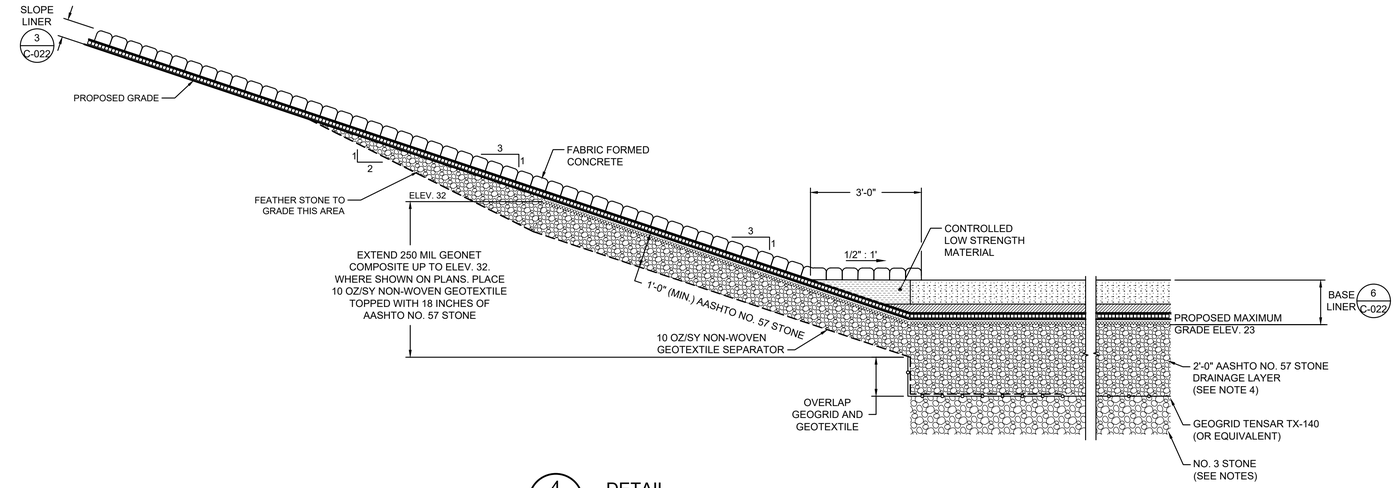

NOTES:
1. NO. 3 STONE SHALL BE USED TO STABILIZE THE SUBGRADE SUFFICIENT TO PLACE GEOGRID.
2. AFTER PLACEMENT OF THE GEOGRID THE AASHTO NO. 57 STONE LAYER SHALL BE PLACED AT A MAXIMUM LIFT OF 1'-6" VIA LOW GROUND PRESSURE EQUIPMENT.
3. CONTRACTOR IS RESPONSIBLE FOR KEEPING THE DRAINAGE LAYER FREE OF SEDIMENT DURING CONSTRUCTION.
4. THE DEPTH OF THE DRAINAGE LAYER SHALL BE DETERMINED BY THE ENGINEER BY WITNESS OF A TEST PAD. THE TEST PAD WILL BE AT MINIMUM A 30 FEET BY 30 FEET AREA AND WILL CONSIST OF AN 24 INCH LAYER OF AASHTO NO. 57 STONE PLACED OVERTOP OF THE GEOGRID. A LOADED CAT 735 ARTICULATED TRUCK SHALL BE DRIVEN ACROSS THE TEST PAD AT THE DIRECTION OF THE ENGINEER TO DETERMINE COMPETENCY OF THE STONE/GEOGRID MATRIX.

4 / C-022 DETAIL
EQUALIZATION BASIN - LINER AT TOE
SCALE: 1"=2'
XREF:

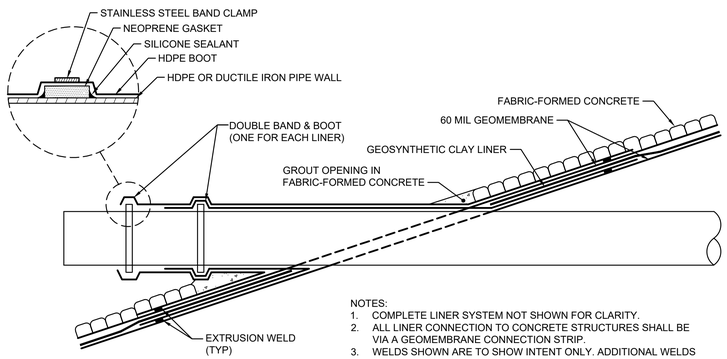

NOTES:
1. COMPLETE LINER SYSTEM NOT SHOWN FOR CLARITY.
2. ALL LINER CONNECTION TO CONCRETE STRUCTURES SHALL BE VIA A GEOMEMBRANE CONNECTION STRIP.
3. WELDS SHOWN ARE TO SHOW INTENT ONLY. ADDITIONAL WELDS WILL BE REQUIRED TO COMPLY WITH THE APPLICABLE SPECIFICATIONS.

5 / C-022 DETAIL
LIINER PENETRATION
SCALE: 1"=2'
XREF:

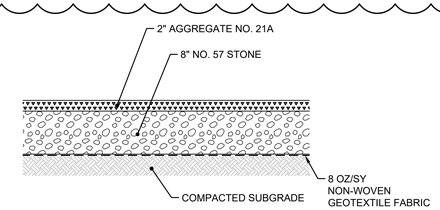

NOTE: THIS DETAIL WAS DIRECTLY REQUESTED BY DOMINION. NOT RECOMMENDED BY THE ENGINEER FOR LONG TERM FINAL ACCESS CONSTRUCTION.

8 / C-022 DETAIL
PARKING AND ACCESS ROAD

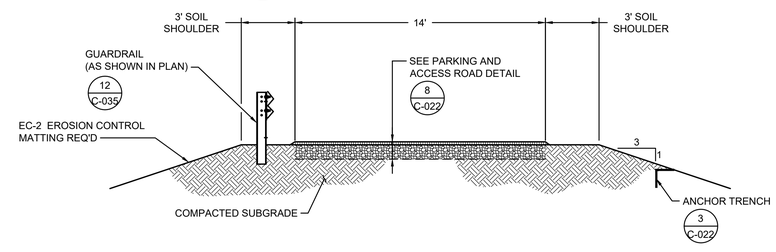

9 / C-022 DETAIL
EQUALIZATION BASIN - PERIMETER ROAD
SCALE: 1"=4'
XREF:

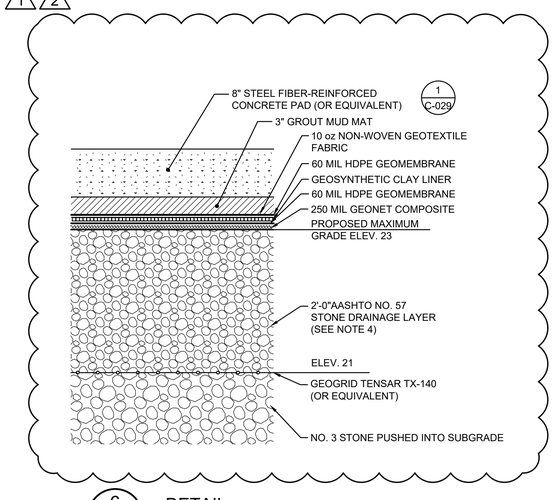

6 / C-022 DETAIL
EQUALIZATION BASIN - BASE LINER
SCALE: 1"=1'
XREF:

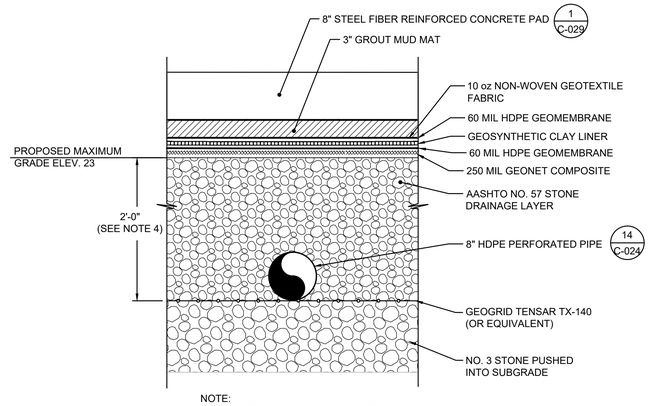

NOTE:
1. UNDERDRAIN SHALL BE PLACED TO HAVE POSITIVE DRAINAGE TOWARDS SUMP AVOIDING SAGS OR LOW POINTS.

10 / C-022 DETAIL
EQUALIZATION BASIN UNDERDRAIN
SCALE: 1"=1'
XREF:

CONSTRUCTION DRAWING

COMMONWEALTH OF VIRGINIA
KYLE E. LaCLAIR
Lic. No. 039540
4-18-17
PROFESSIONAL ENGINEER

SITE PLAN #16PR0174
UTILITIES PROJECT #15-0348

Geosyntec consultants
9211 ARBORETUM PARKWAY, SUITE 200
RICHMOND, VA 23236 USA
PHONE: 804.767.2206

DOMINION℠
POWER GENERATION ENGINEERING
RICHMOND, VIRGINIA

TYPICAL LINER DETAILS

LOW VOLUME WASTEWATER TREATMENT SYSTEM
CHESTERFIELD POWER STATION

REV	DATE	DESCRIPTION
2		EQUALIZATION BASIN BOTTOM REVISED TO ELEV. 23 DEPTH OF NO 57 STONE REVISED
1	03-30 2017	REVISED EQUALIZATION BASIN LINER AND AND UNDERDRAIN DETAILS
0	09-30 2016	ISSUED FOR CONSTRUCTION

DSGN	KEL	DSGN SUPV	SKS
DRWN	JOC	ENGR SUPV	-
CHKD	SKS	PROJ ENGR	-
DISPL ENGR	KMH	SCALE: AS NOTED	UNLESS OTHERWISE NOTED

DRAWING NUMBER 65309-1C-C-022 REV. 2

SH 22 OF 36

L:\DOMINION\CHESTERFIELD POWER STATION\LOW VOLUME WASTEWATER SYSTEM MV1372\CONSTRUCTION\DRAWINGS\PLANS\Ph 1C EQ BASIN\65309-C-022_EQB.DWG-4/18/2017-3:37:15 PM-Theresa Wanera

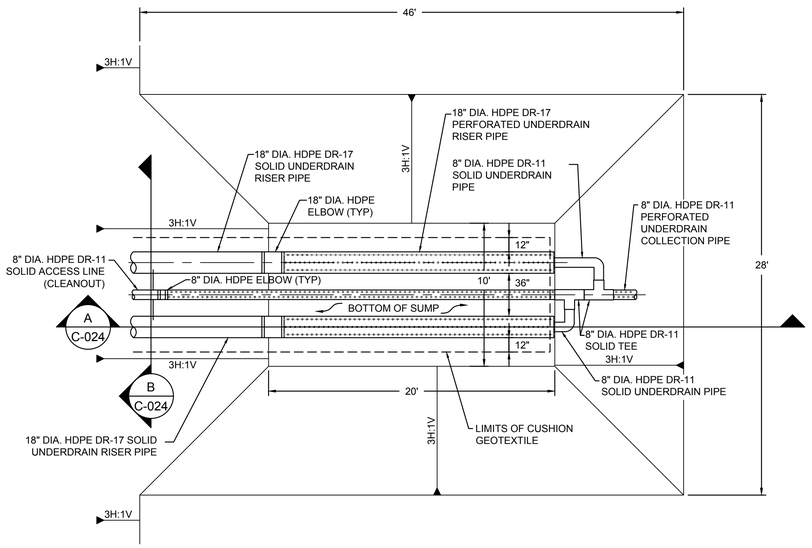

11 C-024 PLAN
UNDERDRAIN SUMP
SCALE: 1" = 5'

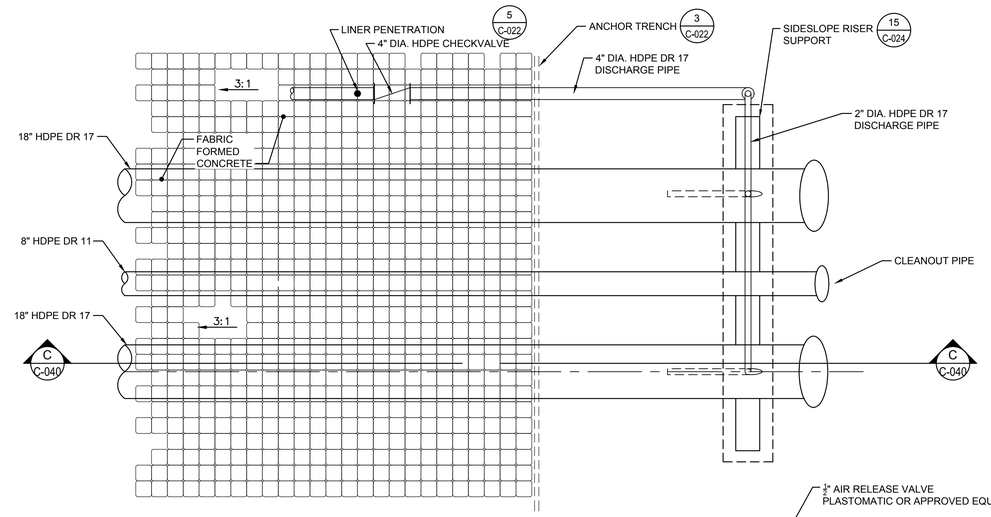

12 C-040 PLAN
RISER TERMINATION
SCALE: 1" = 2'

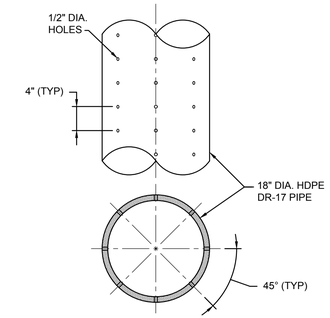

13 C-024 DETAIL
PERFORATED UNDERDRAIN RISER PIPE
SCALE: 1" = 1'
XREF: 1222xRISER PERF

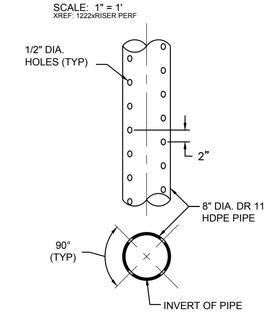

14 C-024 DETAIL
PERFORATED UNDERDRAIN COLLECTION PIPE
SCALE: 1" = 1'

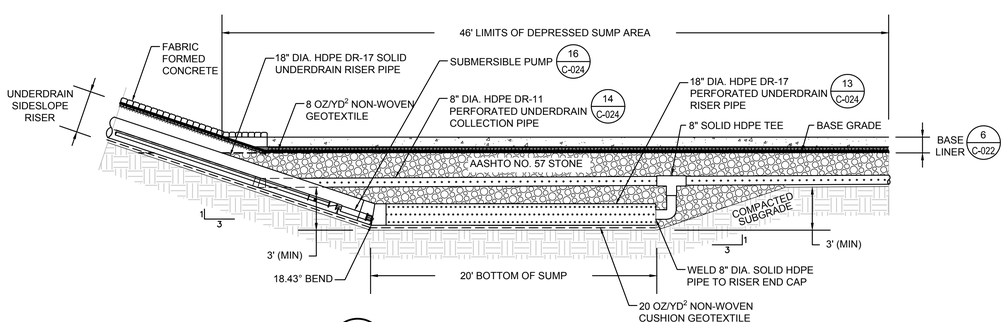

A C-024 SECTION
UNDERDRAIN SUMP
SCALE: 1" = 5'

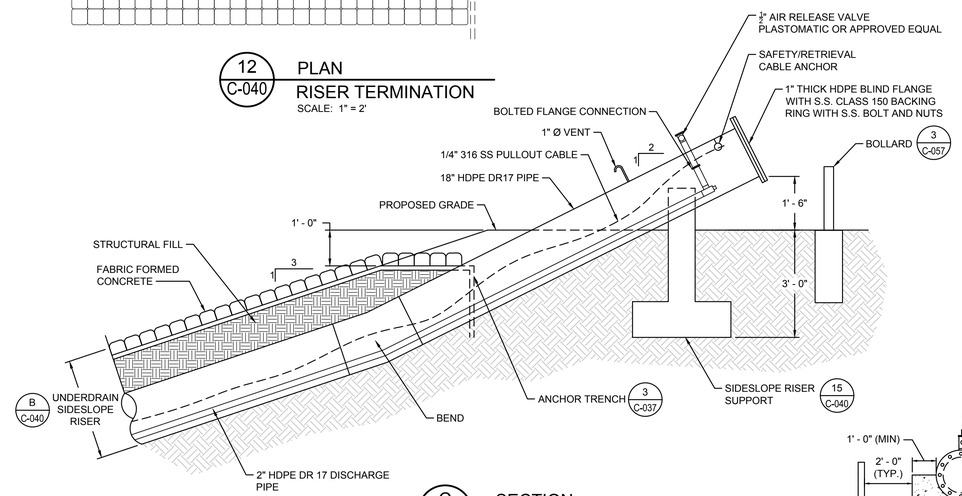

C C-040 SECTION
RISER TERMINATION
SCALE: 1" = 2'

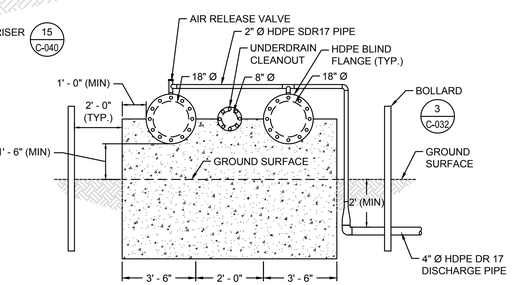

17 C-024 DETAIL
SIDESLOPE RISER SUPPORT
SCALE: 1" = 3'

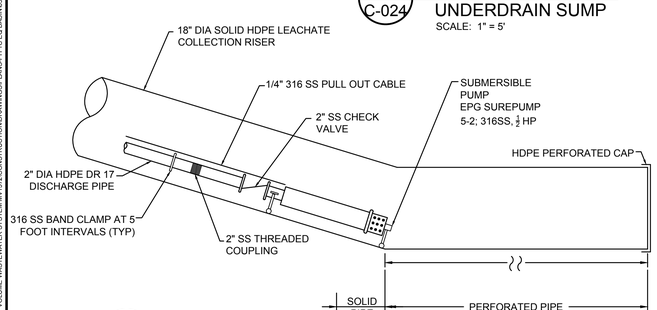

16 C-024 DETAIL
SUBMERSIBLE PUMP AT UNDERDRAIN SUMP
SCALE: 1" = 3'

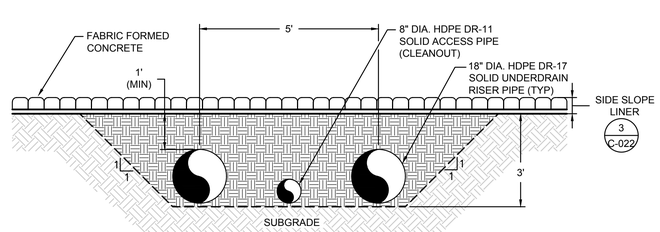

B C-024 SECTION
UNDERDRAIN SIDESLOPE RISER ON SLOPE
SCALE: 1" = 2'

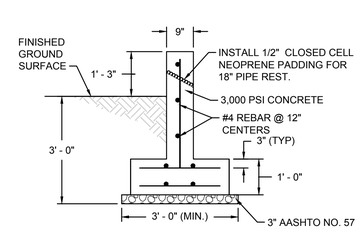

15 C-024 DETAIL
SIDESLOPE RISER SUPPORT
SCALE: 1" = 2'

CONSTRUCTION DRAWING

SITE PLAN #16PR0174
UTILITIES PROJECT #15-0348

Geosyntec consultants
9211 ARBORETUM PARKWAY, SUITE 200
RICHMOND, VA 23236 USA
PHONE: 804.767.2206

DOMINION℠
POWER GENERATION ENGINEERING
RICHMOND, VIRGINIA

UNDERDRAIN SUMP & RISER DETAILS

LOW VOLUME WASTEWATER TREATMENT SYSTEM
CHESTERFIELD POWER STATION

REV	DATE	DSGN	DRWN	CHKD	DSGN SUPV	PROJ ENGR	CIVIL ENGR	ELEC ENGR	MECH ENGR	ARCH	E.M. ENGR	I&C ENGR	
0	09-30-2016		JOC	SKS		CMC	KEL						ISSUED FOR CONSTRUCTION

DSGN KLC	DSGN SUPV SKS		
DRWN JOC	ENGR SUPV -	DRAWING NUMBER 65309-1C-C-024	REV. 0
CHKD SKS	PROJ ENGR -		
DISPL ENGR KMH	SCALE: AS NOTED	UNLESS OTHERWISE NOTED	SH 24 OF 36

L:\DD\DOMINION\CHESTERFIELD POWER STATION\LOW VOLUME WASTEWATER SYSTEM MV\3\2\CONSTRUCTION\DRAWING\SPLANS-PH 1 CE EQ BASIN\65309-C-024_EQB.DWG--5/8/2017--12:48:22 PM--Juliana Cammarata

Geosyntec consultants

APPENDIX D

Coal Pile Runoff Basin Process and Instrumentation Plan

0-WWT-P- 10

DESCRIPTION: SIDE SLOPE RISER PUMP
MANUFACTURER: EPG
MODEL No.: SURE PUMP 5-2
TYPE: SUBMERSIBLE
CAPACITY: 15 GPM (EST)
INLET/OUTLET SIZE: NA/2"
MOTOR SIZE: 1/2 HP
VOLT/PH/FREQ: 460/3/60
MOTOR RPM: 1800
FRAME SIZE:

0-WWT-P-9 A/B

DESCRIPTION: NORMAL FLOW
MANUFACTURER: FLYGT
MODEL No.: DP 8058 HT 3~268
TYPE: SUBMERSIBLE
CAPACITY: 251 GPM
TDH: 80.8 FT
INLET/OUTLET SIZE:
MOTOR SIZE: 20 HP
VOLT/PH/FREQ: 460/3/60
MOTOR RPM: 3490RPM

1A

NOTES:
1. EXACT CONFIGURATION OF VENT/DRAIN CONNECTIONS TO BE DETERMINED.
2. ELEVATIONS OF LEVEL SWITCHES TO BE DETERMINED.

REFERENCE DRAWINGS:
1. 65309-CH-0-FL-WWT-012A EQ BASIN INFLUENT P&ID

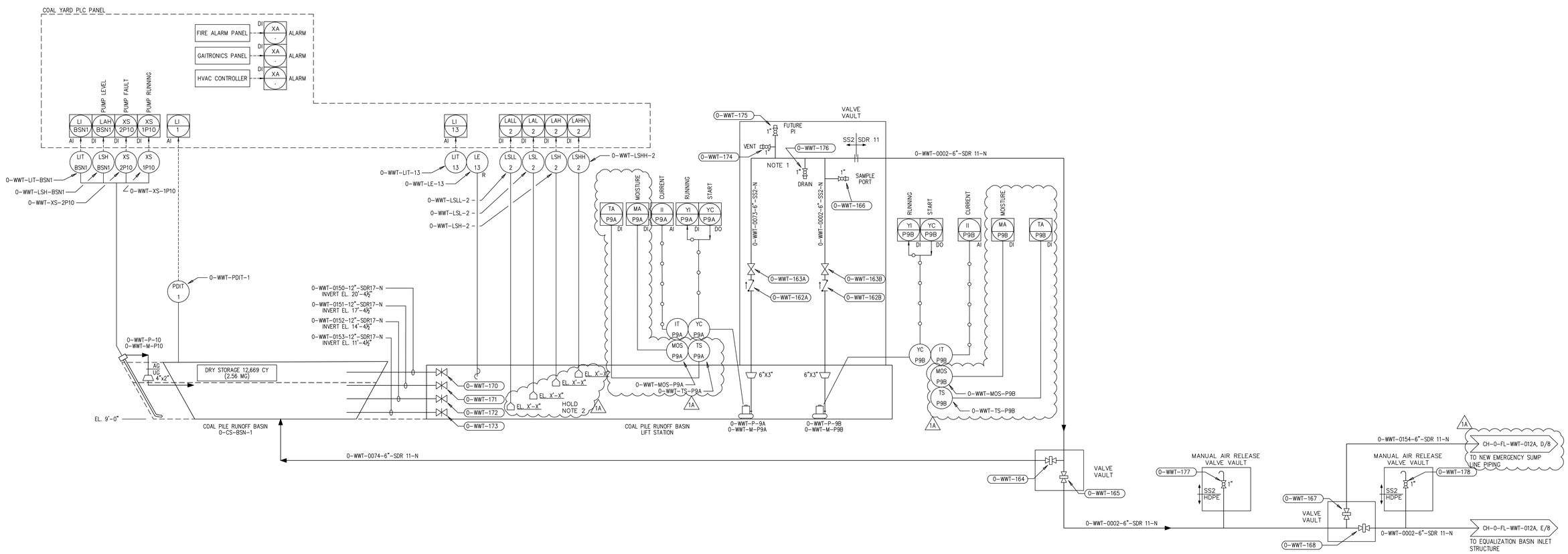

CONTROLLED DRAWING
ANY CHANGES MADE TO THIS SYSTEM SHALL BE DOCUMENTED AS NOTED IN FOSSIL AND HYDRO CONTROLS MANUAL SECTION 6.3 .

ISSUED FOR APPROVAL
ITAC: DMT DATE: 04/28/17
CLIENT: DATE:
APPROVED ☐ APPROVED AS NOTED ☐ RESUBMIT ☐
RETURN TO ITAC BY:
ITAC ENGINEERS AND CONSTRUCTORS

ITAC
INDUSTRIAL TURNAROUND CORPORATION
10351 BRADFORD ROAD
CHESTERFIELD, VA 23838
804-414-1100
WWW.ITACUSA.COM

DOMINION℠

POWER GENERATION ENGINEERING
RICHMOND, VIRGINIA

PROCESS AND INSTRUMENTATION DIAGRAM
LOW VOLUME WASTEWATER TREATMENT SYSTEM
COAL PILE RUNOFF SYSTEM
CHESTERFIELD POWER STATION

DSGN	ANW	DSGN SUPV	-
DRWN	GJG	ENGR SUPV	-
CHKD	AWW	PROJ ENGR	CAN
DISPL ENGR	AWW	SCALE:	AS NOTED

DRAWING NUMBER: 65309-CH-0-FL-WWT-015 REV. 1A
UNLESS OTHERWISE NOTED SH 1 OF 1

REV	DATE	DSGN	DRWN	CHKD	DSGN SUPV	PROJ ENGR	CIVIL ENGR	ELEC ENGR	MECH ENGR	ARCH	E.M. ENGR	I&C ENGR	
1A	04-28 2017	-	LMP	DMT	-	-	-	WEH	-	-	-	-	ISSUED FOR APPROVAL, WBS #65309
0	07-15 2016	LMP	LMP	AWW	AWW	DMT	-	-	-	-	-	-	ISSUED FOR CONSTRUCTION, WBS #65309
D	06-29 2016	GJG	LMP	AWW		-	-	-	-	-	-	-	ISSUED FOR APPROVAL, WBS #65309
C	11-13 2015	RHT	CP	JEM	KAL	-	-	-	-	-	-	-	ISSUED FOR BID, WBS #65309
B	11-04 2015	JEM	CP	JEM	KAL	-	-	-	-	-	-	-	ISSUED FOR BID, WBS #65309
A	09-29 2015	RHT	CP	JEM	AW	-	-	-	-	-	-	-	ISSUED REVIEW/COMMENT, WBS #65309

APPENDIX E

Coal Pile Runoff Basin Liner and Underdrain System Drawings

1 NOT USED

2 NOT USED

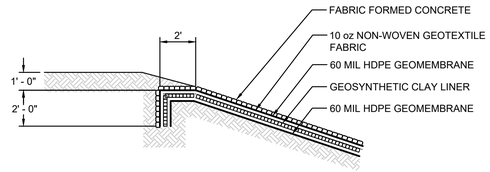

3 C-018 DETAIL
DISCHARGE BASIN - ANCHOR TRENCH & SLOPE LINER
SCALE: 1"=4'
XREF: 1222xDTL_SB BASIN ANCH TNCH

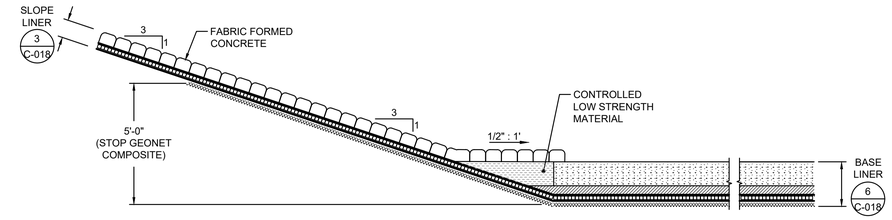

4 C-018 DETAIL
DISCHARGE BASIN - LINER AT TOE
SCALE: 1"=2'
XREF: 1222xDTL_SB BASIN LINER TOE

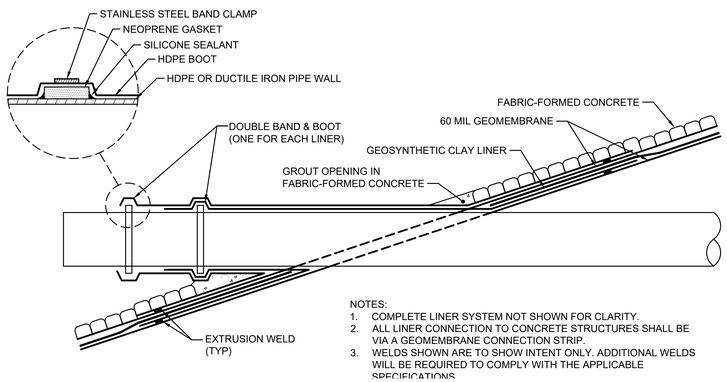

NOTES:
1. COMPLETE LINER SYSTEM NOT SHOWN FOR CLARITY.
2. ALL LINER CONNECTION TO CONCRETE STRUCTURES SHALL BE VIA A GEOMEMBRANE CONNECTION STRIP.
3. WELDS SHOWN ARE TO SHOW INTENT ONLY. ADDITIONAL WELDS WILL BE REQUIRED TO COMPLY WITH THE APPLICABLE SPECIFICATIONS.

5 C-018 DETAIL
LINER PENETRATION
SCALE: 1"=2'
XREF: 1222xDTL_LINER PENETRATION

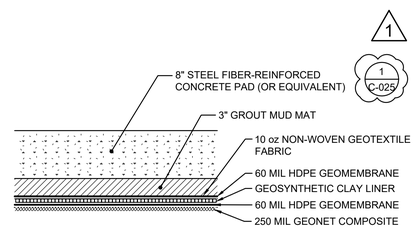

6 C-018 DETAIL
DISCHARGE BASIN - BASE LINER
SCALE: 1"=1'
XREF: 1222xDTL_SB BASIN LINER

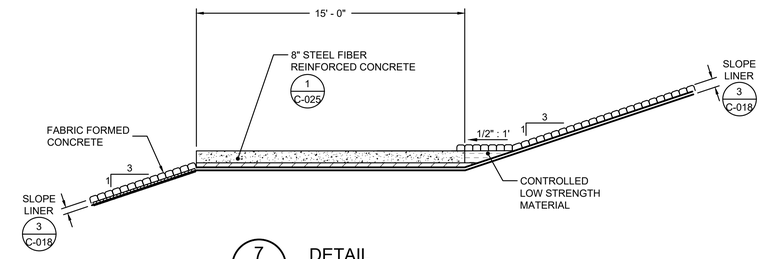

7 C-018 DETAIL
DISCHARGE BASIN - ACCESS LINER
SCALE: 1"=4'
XREF: 1222xDTL_SB BASIN ACCESS LINER

8 NOT USED

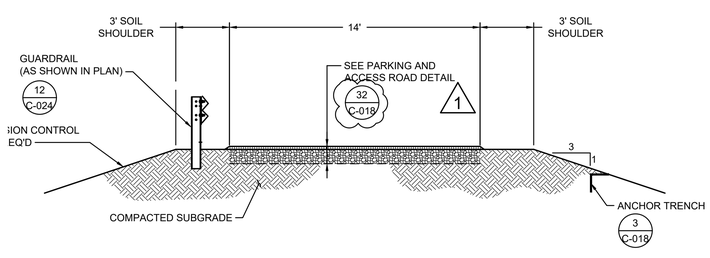

9 C-018 DETAIL
DISCHARGE BASIN - PERIMETER ROAD
SCALE: 1"=4'
XREF: 1222xDTL_SB PERIMETER ROAD

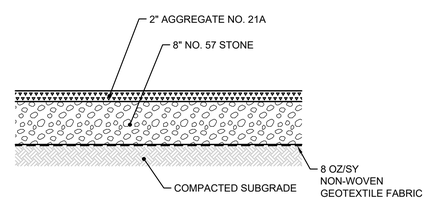

NOTE: THIS DETAIL WAS DIRECTLY REQUESTED BY DOMINION. NOT RECOMMENDED BY THE ENGINEER FOR LONG TERM FINAL ACCESS CONSTRUCTION.

32 C-018 DETAIL
PARKING AND ACCESS ROAD

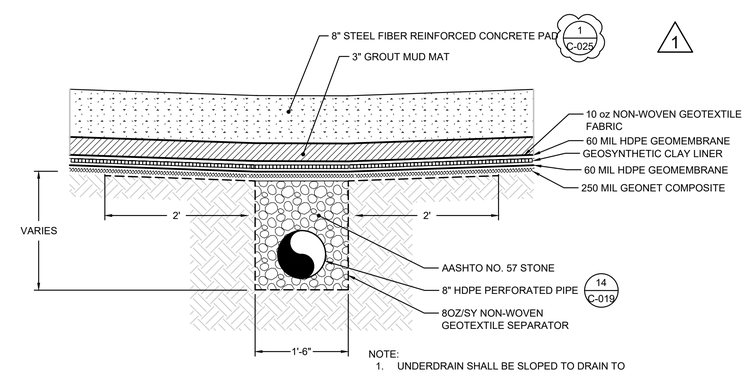

NOTE:
1. UNDERDRAIN SHALL BE SLOPED TO DRAIN TO SUMP.

10 C-018 DETAIL
DISCHARGE BASIN UNDERDRAIN
SCALE: 1"=2'
XREF: 1222xDTL_SB BASIN UD

11 NOT USED

12 NOT USED

CONSTRUCTION DRAWING

SITE PLAN #16PR0174
UTILITIES PROJECT #15-0348

Geosyntec consultants
9211 ARBORETUM PARKWAY, SUITE 200
RICHMOND, VA 23236 USA
PHONE: 804.767.2206

DOMINION℠
POWER GENERATION ENGINEERING
RICHMOND, VIRGINIA

TYPICAL LINER DETAILS

LOW VOLUME WASTEWATER TREATMENT SYSTEM
CHESTERFIELD POWER STATION

REV	DATE	DSGN	DRWN	CHKD	DSGN SUPV	PROJ ENGR	CIVIL ENGR	ELEC ENGR	MECH ENGR	ARCH	E.M. ENGR	I&C ENGR
1	01-24 2017											
0	07-29 2016		TAW	SKS		KEL	KEL					

1 CORRECTED CALL OUTS 6, 9, &10.

0 ISSUED FOR CONSTRUCTION

DSGN KEL	DSGN SUPV SKS		
DRWN JOC	ENGR SUPV -	DRAWING NUMBER 65309-1B-C-018	REV. 1
CHKD SKS	PROJ ENGR -		
DISPL ENGR KMH	SCALE: AS NOTED	UNLESS OTHERWISE NOTED	SH 18 OF 29

L:\DOMINION\CHESTERFIELD POWER STATION\LOW VOLUME WASTEWATER SYSTEM MV1372\CONSTRUCTION\DRAWINGS\PLANS-PH 1B\DISCH BASIN\65309-C-018_DB.DWG--10/4/2017--2:09:33 PM--Juliana Cammarata

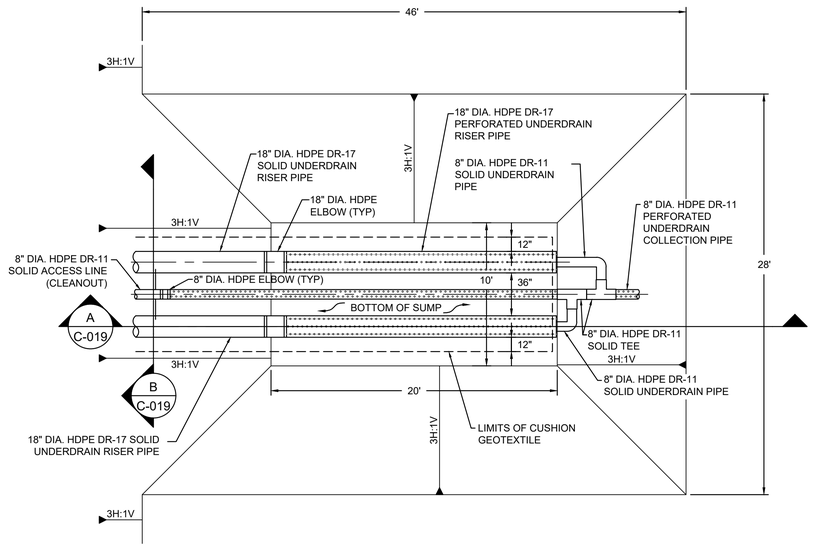

11 C-019 PLAN
UNDERDRAIN SUMP
SCALE: 1" = 5'

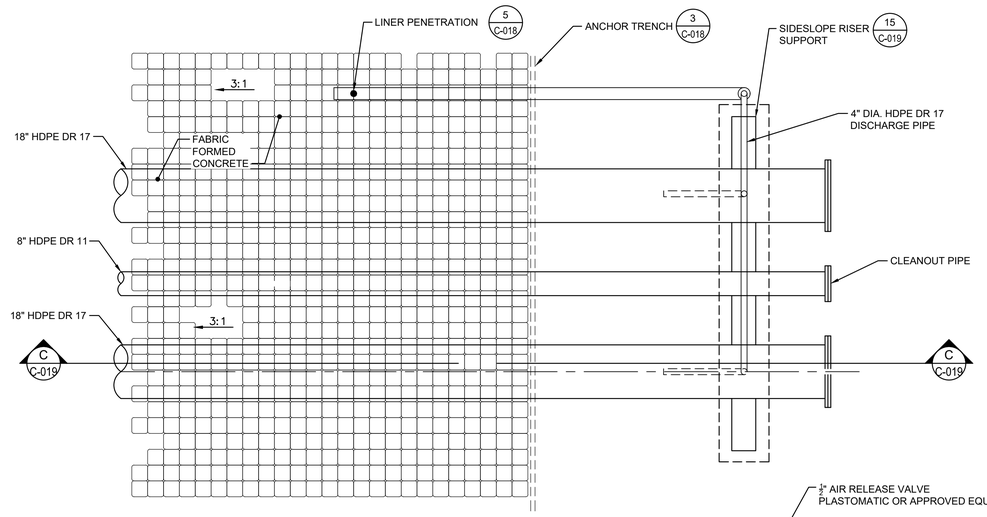

12 C-019 PLAN
RISER TERMINATION
SCALE: 1" = 2'

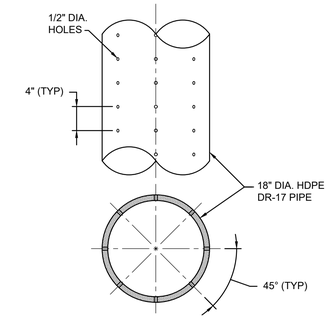

13 C-019 DETAIL
PERFORATED UNDERDRAIN RISER PIPE
SCALE: 1" = 1'
XREF: 1222xRISER PERF

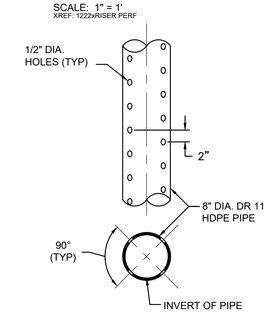

14 C-019 DETAIL
PERFORATED UNDERDRAIN COLLECTION PIPE
SCALE: 1" = 1'

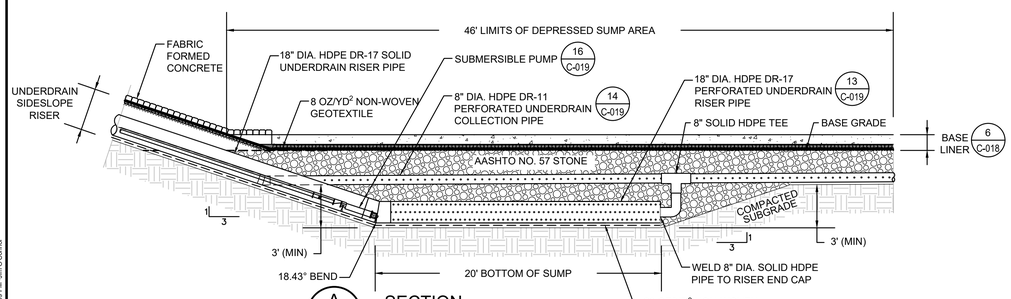

A C-019 SECTION
UNDERDRAIN SUMP
SCALE: 1" = 5'

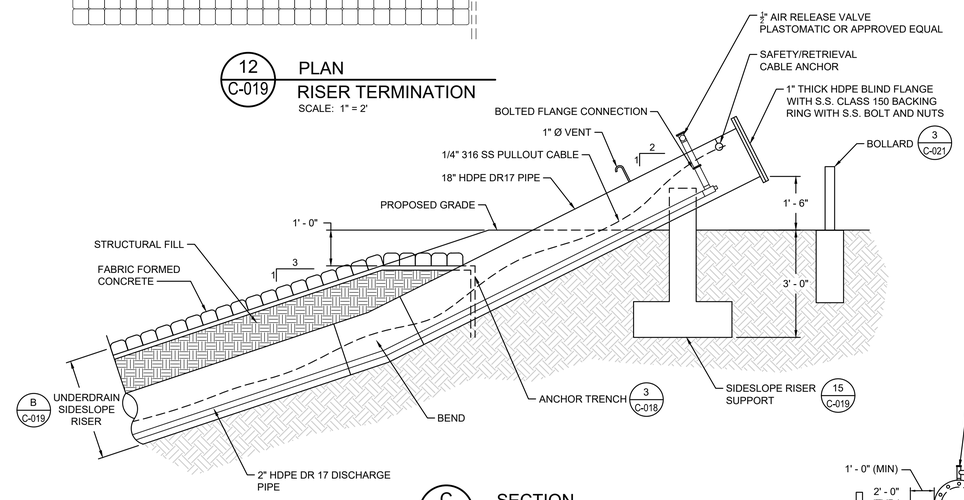

C C-019 SECTION
RISER TERMINATION
SCALE: 1" = 2'

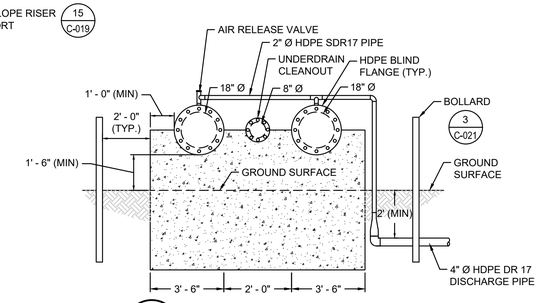

17 C-019 DETAIL
SIDESLOPE RISER SUPPORT
SCALE: 1" = 3'

CONSTRUCTION DRAWING

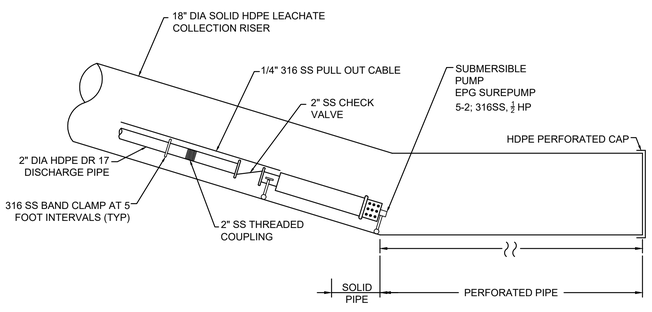

16 C-019 DETAIL
SUBMERSIBLE PUMP AT UNDERDRAIN SUMP
SCALE: 1" = 3'

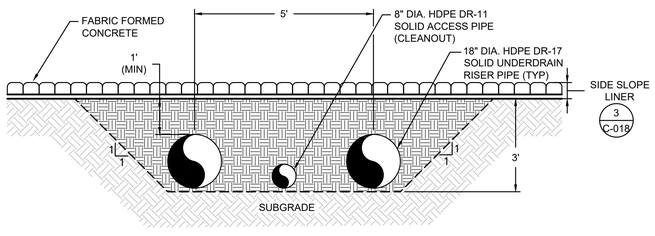

B C-019 SECTION
UNDERDRAIN SIDESLOPE RISER ON SLOPE
SCALE: 1" = 2'

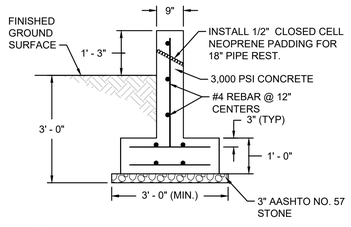

15 C-019 DETAIL
SIDESLOPE RISER SUPPORT
SCALE: 1" = 2'

SITE PLAN #16PR0174
UTILITIES PROJECT #15-0348

Geosyntec consultants
9211 ARBORETUM PARKWAY, SUITE 200
RICHMOND, VA 23236 USA
PHONE: 804.767.2206

DOMINION℠
POWER GENERATION ENGINEERING
RICHMOND, VIRGINIA

UNDERDRAIN SUMP & RISER DETAILS

LOW VOLUME WASTEWATER TREATMENT SYSTEM
CHESTERFIELD POWER STATION

REV	DATE	DSGN	DRWN	CHKD	DSGN SUPV	PROJ ENGR	CIVIL ENGR	ELEC ENGR	MECH ENGR	ARCH	E.M. ENGR	I&C ENGR
0	07-29 2016		JOC	CJD		KEL	KEL					

ISSUED FOR CONSTRUCTION

DSGN KLC	DSGN SUPV SKS	DRAWING NUMBER	REV.
DRWN JOC	ENGR SUPV -	65309-1B-C-019	0
CHKD SKS	PROJ ENGR -		
DISPL ENGR KMH	SCALE: AS NOTED	UNLESS OTHERWISE NOTED	SH 19 OF 29

L:\DOMINION\CHESTERFIELD POWER STATION\LOW VOLUME WASTEWATER SYSTEM\1372\CONSTRUCTION\DRAWINGS\PLANS\PH 1B DISCH BASIN\65309-C-019_DB.DWG-10/4/2016-4:43:39 PM--jon O'Connor

COMMONWEALTH of VIRGINIA

DEPARTMENT OF ENVIRONMENTAL QUALITY
PIEDMONT REGIONAL OFFICE
4949A Cox Road, Glen Allen, Virginia 23060
(804) 527-5020 Fax (804) 527-5106
www.deq.virginia.gov

Molly Joseph Ward
Secretary of Natural Resources

David K. Paylor
Director

Jeffery Steers
Regional Director

April 21, 2017

Paula A. Hamel
Director, Generation Environmental Services
Dominion Virginia Power
Chesterfield Power Station

Re: VA0004146 – Chesterfield Power Station – Low Volume Wastewater Treatment System Phase I – Concept Engineering Report

Ms. Hamel:

Thank you for submitting the above referenced Concept Engineering Report (CER) in accordance with Part I.C.20 of VPDES Permit VA0004146 which became effective on October 1, 2016. The Department of Environmental Quality has reviewed the CER and requests additional information as specified below in order to complete its review.

With regard to design, please provide:

a. The overall size, volume, and detention time of the EQ Basin, Discharge Basin and Coal Pile Runoff Basin;
b. Earthen structure profile drawings for all of the basins;
c. A summary of wastewater conveyance design to include:
    i. A map of all proposed conveyances; and,
    ii. Identification of pipes, pumps, pump rates, sizing, etc. for the wastewater conveyed from the Coal Pile Runoff Basin to the LVWWTS.
d. The basin design for the Coal Pile Runoff Basin (liner, etc.);
e. A summary of the conceptual design of the under liner drainage systems for the EQ and Discharge Basins;
f. Calculations supporting how the wet volume operational conditions are intended to achieve the solids settling needed to comply with effluent limitations; and
g. A summary of the conceptual design and design calculations for the pH adjustment needed to comply with effluent limitations (i.e. details on a chemical feed system, selection of chemicals, secondary containment for chemical storage, feed rates, etc.).

With regard to operation, please provide:

a. The minimum dry volume capacities to be maintained by the EQ Basin, Discharge Basin and Coal Pile Runoff Basin to contain design storm events; and
b. The maintenance/cleanout strategy for the Coal Pile Runoff Basin.

Enclosed please find Guidance Memo 93-030, which provides guidelines for the content of a CER. This guidance may be helpful in responding to our request for additional information. Please contact Joseph Bryan at (804) 527-5012 or via email at Joseph.Bryan@deq.virginia.gov if you have any questions.

Sincerely,

Emilee C. Adamson

Emilee C. Adamson
Planning and Water Permit Manager

cc: Kenneth Roller – Dominion

Enclosure: GM93-030

Dominion Resources Services, Inc.
5000 Dominion Boulevard, Glen Allen, VA 23060

dom.com

Dominion

January 31, 2017

RECEIVED PRO
FEB 03 2017

Ms. Emilee Adamson
VPDES Permit Manager
Virginia Department of Environmental Quality
Piedmont Regional Office
4949-A Cox Road
Glen Allen, Virginia 23060

Re: Submittal of Concept Engineering Report for Phase I of the Low Volume Wastewater Treatment System, VPDES Permit No. VA0004146, Chesterfield Power Station

Dear Ms. Adamson:

Dominion is submitting the attached Concept Engineering Report (CER) for Phase 1 of the new Low Volume Wastewater Treatment System (LVWWTS) at the Chesterfield Power Station. The LVWWTS will be constructed in three separate phases. The attached CER describes the LVWWTS components that will be constructed in Phase 1 to treat process wastewater and contact stormwater related to Station operations. The CER will be amended at later dates to include Phases 2 and 3, in accordance with the compliance schedule outlined in VPDES Permit VA0004146.

This CER is being submitted in accordance with Special Condition I.C.20 of VPDES Permit VA0004146. As such, we are requesting DEQ's review and approval of the CER so that we may initiate construction of Phase I of the LVWWTS, as proposed.

If you have any questions, please contact Ken Roller at Kenneth.Roller@dom.com.

I certify under penalty of law that this document and all attachments were prepared under my direction or supervision in accordance with a system designed to assure that qualified personnel properly gather and evaluate the information submitted. Based on my inquiry of the person or persons who manage the system, or those persons directly responsible for gathering the information, the information is, to the best of my knowledge and belief, true, accurate, and complete. I am aware that there are significant penalties for submitting false information, including the possibility of fine and imprisonment for knowing violations.

Sincerely,

Paula A. Hamel

Paula A. Hamel
Director, Generation Environmental Services

Attachment

Prepared for

Dominion Virginia Power
500 Coxendale Road
Chester, Virginia 23836

CONCEPT ENGINEERING REPORT

Low Volume Wastewater Treatment System

Chesterfield Power Station

Prepared by

Geosyntec consultants
9211 Arboretum Parkway, Suite 200
Richmond, Virginia 23236

Project Number MV1222 & MV1372

January 2017

TABLE OF CONTENTS

1. INTRODUCTION 1
   1.1 Overview and Purpose 1
   1.2 Project Background 1

2. PHASE 1– OUTFALL 301 HYDRAULIC AND INTERIM COMPLIANCE 5
   2.1 Evaluation of Wastewater Sources, Characteristics, and Treatability 6
      2.1.1 Wastewater and Stormwater Inputs 6
      2.1.2 Wastewater and Stormwater Generation 7
      2.1.3 Sample Collection Methodology 13
   2.2 Design Approach and Methods 14
      2.2.1 Hydraulic Effluent Limitations 14
      2.2.2 Facility Siting 14
      2.2.3 General Wastewater Management Approach 15
      2.2.4 LVWWTS Operational Requirements 15
   2.3 Pilot Treatment Systems and Contingency 18
      2.3.1 Mobile Treatment System 18
      2.3.2 Recirculation 18

3. PHASE 2 OF LVWWTS (PLACEHOLDER FOR FUTURE SUBMITTAL) 19

4. PHASE 3 OF LVWWTS (PLACEHOLDER FOR FUTURE SUBMITTAL) 20

LIST OF FIGURES

Figure 1: Outfall and Metering Location Map

Figure 2: Process Flow Diagram

LIST OF APPENDICES

Appendix A – Hydrologic Calculations

1. INTRODUCTION

1.1 Overview and Purpose

This Concept Engineering Report (CER) was prepared by Geosyntec Consultants, Inc. (Geosyntec) for Dominion Virginia Power (Dominion) in support of the ongoing efforts to comply with regulatory requirements associated with the new Low Volume Waste Water Treatment System (LVWWTS) at the Chesterfield Power Station (the Station) located in Chester, Virginia, about 15 miles south of Richmond on the James River. The purpose of this report is to serve as documentation of inputs and considerations that will be used to design the construction documents for the LVWWTS and to demonstrate compliance with the renewed Virginia Pollutant Discharge Elimination System (VPDES) Permit VA0004146 issued on September 23, 2016. The proof of concept for the proposed treatment system will be based on the published regulatory effluent limitations associated with the aforementioned permit, the new Steam Electric Effluent Limitation Guidelines (ELGs), Station operational requirements, and the wastewater chemistry and flow data collected at the site. The scope of this CER covers the LVWWTS only as a phased construction program in accordance with the VPDES permit compliance schedule.

1.2 Project Background

The Station is an active, operating electric power generating station comprised of four (4) coal-fired combustion units (Units 3, 4, 5, and 6) and two (2) natural gas-fired combined cycle units (Units 7 and 8). Currently, many wastewaters generated at the Station are being directed to the Lower Ash Pond (LAP). In compliance with the federally mandated Coal Combustion Residual (CCR) rules, Dominion is planning to close the LAP. As a result of the closure, the wastewaters can no longer be directed to the LAP, in addition, other processes related to ash management must be changed.

This CER is being developed to cover the new LVWWTS components that will be used to treat the process wastewater and contact stormwater runoff that will be redirected from the LAP or that are otherwise being created during the conversion from wet-to-dry ash management (described in **Section 2.1** below). The VPDES regulated outfalls that are included in this CER are as follows:

- Outfall 301 – An internal outfall located within the Thermal Channel up-gradient from Outfall 003. This internal outfall is the discharge from the new LVWWTS and includes inputs from other internal outfalls listed below:
    - Outfall 302 – Discharge from the Flue Gas Desulfurization (FGD) wastewater treatment plant

- Outfall 303 – Discharge from the Metal Cleaning Waste Treatment Basin
- Outfall 304 – Discharge of the leachate from the new Fossil Fuel Combustion Products (FFCP) Management Facility, as needed. Instead of a separate discharge, the leachate may be routed through the FGD wastewater treatment plant, and the contact stormwater will be routed through the FGD Yard Sumps.
- Outfall 305 – Discharge from the Coal Pile Runoff Metals Treatment System, as needed

The internal outfalls included in this LVWWTS CER are depicted in **Figure 1** for reference.

The LVWWTS compliance sequencing is broken into three (3) phases described in more detail below. The first phase includes development of three basins to provide equalization of discharge streams for flow control, to provide Total Suspended Solids (TSS) removal, provide pH adjustment, and for the ability to conduct representative treatability analyses needed to inform subsequent phases. The second phase includes implementation of a treatment system for coal pile runoff (as needed), for FFCP Management Facility leachate (if necessary), and a possible metals polishing treatment system to treat the discharge between the Equalization (EQ) Basin and the Discharge Basin. The third phase includes the development, construction, and commissioning of treatment systems for the FGD wastewater. Additional detail for each phase is presented below.

- **Phase 1**

  The initial phase of the LVWWTS construction will include construction of three basins: the EQ Basin, the Discharge Basin, and the Coal Pile Runoff Basin. The EQ Basin and the Discharge Basin will be constructed with both a wet volume and a dry volume storage for solids settling, as needed. The wet volume storage provides a continual pool of water to facilitate settling of suspended solids in the effluent. The dry volume storage provides storage of effluent sufficient to contain at least a 25-year, 24-hour storm event.

  The EQ Basin will ultimately collect all wastewater discharges. For an initial intermediate period, prior to the initial discharge from Outfall 301, the Coal Pile Runoff Basin discharge may be directed to the LAP for the purposes of startup and commissioning. The Coal Pile Basin will collect runoff from the coal pile and subsequently feed into the metals treatment system described below in Phase 2.

  The purpose of the EQ Basin is to provide moderation of the flows and water quality of the effluent waste streams, which is critical to efficient and reliable treatment of the combined waste streams to the required limits. The EQ Basin will be directed to the Discharge Basin. The purpose of the Discharge Basin is to maintain, in

conjunction with the EQ Basin, a flow below the maximum permitted discharge rate. In addition, the Discharge Basin allows for the assimilation of treated effluent prior to discharge through internal Outfall 301 to ensure the permit limits are achieved. During commissioning of the Phase 1 systems, and prior to discharge through Outfall 301, temporary connections between the EQ Basin and the LAP will allow for the treated effluent from the EQ Basin to discharge to the LAP, as needed. Leachate from the new FFCP facility will not be directed to the EQ Basin during this initial commissioning period. Phase 1 is estimated to be complete during fall 2017.

- **Phase 2**
  Phase 2 consists of the design, construction, and commissioning of a coal pile runoff metals treatment system, as needed, a treatment system for the FFCP Management Facility leachate, if necessary, and a polishing metals treatment system, if needed, at the discharge of the EQ Basin. The purpose of these treatment systems is to achieve compliance with the final effluent limitations at each of the respected internal outfalls in accordance with the VPDES permit. The effluent from the Coal Pile Runoff metals treatment system will be directed to the EQ Basin constructed in Phase 1 through new internal Outfall 305. The location of the new internal outfall for the coal pile runoff treatment system will be provided in the Phase 2 CER that will be prepared and submitted to DEQ. In addition, a metals treatment system may be added to address leachate originating from the FFCP Management Facility, if necessary. The internal outfall (Outfall 304) will be directed to the LVWWTS via the FGD Yard Sump line to the EQ Basin. Lastly, Phase 2 also consists of the design and construction of a polishing metals treatment system, if needed, between the EQ Basin and the Discharge Basin. After the Coal Pile Runoff Treatment system is commissioned, a treatability study will be conducted on the effluent from the EQ Basin to determine if additional metals treatment is required to meet the final permit limits for internal Outfall 301. In accordance with the permit, the implementation of this phase must be completed within four years of the effective date of the VPDES permit reissuance.

- **Phase 3**
  Phase 3 includes the construction and commissioning of selenium, nitrate/nitrite, and metals removal systems at the FGD wastewater treatment plant. A treatability study will be conducted to determine the type of treatment needed to comply with the final effluent limits on the FGD wastewater treatment plant discharge. The treatment system will be constructed and commissioned by March 29, 2022 in accordance with the compliance schedule in the VPDES permit.

This initial CER submittal includes only the Phase 1 portion, which is included in Section 2 of this CER. Phases 2 and 3 will be added and submitted under separate cover as Sections 3 and 4,

respectively, as additional treatability studies and technology evaluations and selections are concluded.

2. PHASE 1– OUTFALL 301 HYDRAULIC AND INTERIM COMPLIANCE

The Phase 1 construction plan primarily includes the hydraulic conveyance and storage systems of the LVWWTS. However, the Phase 1 construction plan must also achieve the interim effluent limitations as identified in **Table 1** below and published in the VPDES permit. Upon completion of the Phase 1 portion, further evaluations will be required to fully develop the Phase 2 portion of the construction program. The additional evaluations will include monitoring the discharge from the EQ Basin after equalization. Should monitoring during the commissioning period indicate that additional treatment is necessary to achieve compliance with the interim limits, Dominion will implement, as needed, a pilot treatment system that may include vendor provided mobile systems and recirculation and/or localized treatment. Further information on pilot treatment and contingency planning is included in **Section 2.3**.

Table 1: Effluent Limitations, Outfall 301

CONSTITUENTS	DISCHARGE LIMITATIONS			
	MONTHLY AVERAGE	WEEKLY AVERAGE	DAILY MINIMUM	DAILY MAXIMUM
Flow (MGD)	NL	NA	NA	6.0
pH (SU)	NA	NA	6.0	9.0
Total Suspended Solids (TSS)	30 mg/l 22 Kg/d	NA	NA	100 mg/l 72 kg/d
Total Residual Chlorine (μg/L)	180	NA	NA	180
Interim – Total Recoverable Copper (μg/L)	NL	NA	NA	NL
Final – Total Recoverable Copper (μg/L)	72	NA	NA	72
Ammonia as N (kg/d)	NA	NA	NA	235
Interim – Chloride (mg/L)	NL	NA	NA	NL
Final – Chloride (mg/L)	3100	NA	NA	3100
Interim – Total Recoverable Nickel (μg/L)	NL	NA	NA	NL
Final – Total Recoverable Nickel (μg/L)	230	NA	NA	230
Interim – Total Recoverable Zinc (μg/L)	NL	NA	NA	NL
Final – Total Recoverable Zinc (μg/L)	900	NA	NA	900

Heptachlor (µg/L)	NL	NA	NA	NL
Oil and Grease (mg/L)	15	NA	NA	20

NL – No Limitation; NA – Not Applicable

2.1 Evaluation of Wastewater Sources, Characteristics, and Treatability

This section includes an analysis of the wastewater and stormwater characteristics, including generation rates and chemical constituents to support the concept design of the LVWWTS.

2.1.1 Wastewater and Stormwater Inputs

The LVWWTS will be comprised of several wastewater and stormwater inputs that were previously directed to the LAP for treatment and discharge through Outfall 004 and new inputs as described below. Wastewater will be discharged from the LVWWTS through internal Outfall 301.

- FGD Yard Sumps. The FGD Yard Sumps include multiple yard sumps within the area of the FGD wastewater treatment plant at the Station. Specifically, these yard sumps include Station Sumps 1, 2, and 3. These sumps primarily receive contact stormwater, but also receive Proctors Creek make up screen backwash water. These sumps currently collectively discharge into a single pipe leading to the existing Master Retention Pond prior to discharging to the LAP (see **Figure 1**). In the final configuration, the sump discharges will be re-routed to the LVWWTS.

  Other planned inputs into the FGD Yard Sump discharge include the following:

  - FFCP Management Facility: Leachate (interim) and contact stormwater from the FFCP Management Facility will be piped to the FGD Yard Sumps via a lift station.
  - Fly Ash Silo Area: Contact stormwater from the area around the Fly Ash Silos will be pumped (via a containment sump) to the FGD Yard Sumps.
  - FGD Wastewater Treatment Plant (WWTP) Discharge: This input is also part of the FGD Yard Sump discharge and is included in the flows metered at the effluent of the FGD Yard Sump. The FGD WWTP discharge ties to the FGD Yard Sump discharge pipe inside the Station complex.

- Master Sump. The Master Sump includes the main operation sump at Unit 6 that receives the majority of the operational wastewater generated by the Station, including blowdown and housekeeping activities such as floor washing, in addition to industrial contact stormwater runoff. This sump includes multiple pumps varying in size and horsepower.

- Metal Cleaning Waste Treatment Basin Discharge. This is a holding and treatment basin for metal cleaning wastewater. The basin is typically dewatered in a controlled manner via a multi-staged pipe and valve system that is manually operated. The current discharge location of the basin is through the sump directly to the LAP via an 18-inch gravity pipe.
- Coal Pile Runoff Discharge. The Coal Pile Runoff discharge is a contact stormwater discharge that is currently routed to the LAP. The volume of discharge is dependent upon the precipitation rates and configuration of the coal pile.
- S-Ditch Pump Station. The S-Ditch serves as a containment dike and a drainage conveyance channel. The containment portion is for the ash sluice lines for Units 3, 4, 5, and 6, in addition to, the FGD, Master, and pipe networks to the LAP in the event of a pipe failure.
- Upper Ash Pond (UAP) Toe Drain Force Main. The UAP toe drain force main will originate from the UAP closure area and be directed to the LVWWTS via a 6-inch pipe.
- Lower Ash Pond (LAP) Toe Drain Force Main. The LAP toe drain force main will originate from the LAP closure area and be directed to the LVWWTS via a 3-inch pipe.

A process flow diagram has been included for reference as **Figure 2** to depict the various inputs of wastewater in relation to the existing and proposed conditions.

2.1.2 Wastewater and Stormwater Generation

The wastewater and stormwater volumes were estimated using collected metered data or through hydrologic analysis, respectively. The methodology used to determine the average and maximum average daily flow volumes is described below.

2.1.2.1 General Stormwater Generation Approach

Given the existing site conditions, the stormwater runoff peak flow rates and volumes were determined using the National Resources Conservation Service (NRCS) method, which is dependent on the soil's ability to absorb a certain amount of precipitation before runoff begins. This ability is categorized based on a Hydrologic Soil Group (HSG), which categorizes the soils into an A, B, C, or D soil type. A type A soil represents a high permeable soil in terms of stormwater infiltration, and a type D soil represents a low permeable soil. The hydrologic calculations were performed using HydroCAD® micro-computer program. The following list details the assumptions used in determining the peak runoff and associated runoff volumes for each identified input.

1. The estimated surface runoff used the NRCS curve number method. The HSG is fairly consistent given current site characteristics and was assumed to be

HSG of D for all land cover categories. The estimated values are presented in **Table 2** below for each land cover category:

Table 2: Curve Numbers, CN [1]

Description	HSG	Curve Number, CN
Brush, Fair	D	77
Woods, Fair	D	79
Coal Pile	D	85
Site Stone (Non-compacted)	D	87
Grass cover, Poor <50%	D	89
General Industrial	D	93
Roofs, Pavement & Impervious Area	D	98

2. The annual 1-, 2-, 10-, 25-, and 100-year precipitation data is outlined in Table 3 below using a Type II rainfall distribution in accordance with geographic boundaries for NRCS (SCS) rainfall distributions [2] :

Table 3: Precipitation Data

Year Storm	24 hour Depth (in)
1	3.00
2	3.50
10	5.60
25	6.10
100	8.00

3. The time of concentration, t_c, was computed using TR-55 methodology. The Manning's Roughness Coefficient for sheet flow was assumed to be the following: short grass (0.15), non-compacted stone (0.15), dense grass (0.24), and pavement and other impervious (0.011) areas for a maximum of 200 feet, depending on site conditions. Shallow concentrated flow over paved or unpaved areas was used for the remaining distance up to a well-defined receiving channel (if applicable). The remainder of the distance was defined by geometric shape as presented in the calculations (See **Appendix A** for each input flow).

4. The flowrate for the design storm is assumed to be discharged over a 24-hour period.

---

[1] Refer to Appendix for weighted CN values per Outfall

[2] Obtained from http://www.hydrocad.net/pdf/TR-55%20Appendix%20B.pdf accessed on 19 May 2015.

An explanation of how the estimated volume was determined for each input is discussed below.

2.1.2.2 FGD and Master Sumps

A metering plan was developed to collect flow data from the FGD Yard Sumps and the Master Sump discharge pipes at the existing master retention basin. An area-velocity meter with a data logger was installed at each effluent pipe. The location of the meters are shown in **Figure 1** for reference. The flows for these inputs are presented in **Table 4** in units of gallons per day. In addition, the FGD WWTP discharge flow (gallons per day) was included, so that the actual sump discharges could be determined.

As shown in **Table 4 below**, there is variability in the flow on a day-to-day basis. The flows are very dependent upon the Station operations, such as on-going maintenance, storm events, and other unplanned activities. The daily average flow presented in **Table 4** represents the typical operating average daily volume. Although precipitation occurred during the metering period and the flow volumes varied slightly, the precipitation rates were not significant enough and regular enough to necessitate the calculation of a separate storm water runoff volume from the normal operating flows.

Table 4: Metered Daily Average Flows

Date	FGD Sump (MGD)	Master Sump (MGD)	FGD WWTP (MGD)	Date	FGD Sump (MGD)	Master Sump (MGD)	FGD WWTP (MGD)	Date	FGD Sump (MGD)	Master Sump (MGD)	FGD WWTP (MGD)	Date	FGD Sump (MGD)	Master Sump (MGD)	FGD WWTP (MGD)	Date	FGD Sump (MGD)	Master Sump (MGD)	FGD WWTP (MGD)
02/23/15	1.31	1.90	0.10	03/31/15	1.33	3.47	0.07	04/23/15	Meter Down	2.15	0.00	05/09/15	0.57	1.60	0.05	05/25/15	Meter Down	3.41	0.00
02/24/15	2.86	1.75	0.33	04/01/15	0.91	3.53	0.15	04/24/15		2.34	0.00	05/10/15	0.34	2.00	0.03	05/26/15		3.53	0.32
02/25/15	2.75	3.04	0.34	04/02/15	0.72	3.42	0.12	04/25/15		2.27	0.00	05/11/15	0.41	2.22	0.03	05/27/15		3.44	0.31
02/26/15	2.45	2.04	0.33	04/03/15	1.51	3.44	0.33	04/26/15		2.25	0.05	05/12/15	0.37	3.02	0.02	05/28/15		3.88	0.14
02/27/15	1.90	2.23	0.30	04/04/15	0.81	3.24	0.16	04/27/15		2.16	0.18	05/13/15	0.45	3.13	0.04	05/29/15		3.86	0.13
02/28/15	1.23	2.07	0.17	04/05/15	Meter Down	3.28	0.04	04/28/15		2.30	0.03	05/14/15	0.61	3.58	0.08	05/30/15		3.96	0.06
03/01/15	0.39	1.80	0.19	04/06/15		3.34	0.27	04/29/15		2.19	0.00	05/15/15	0.13	3.63	0.00	05/31/15		4.01	0.14
03/02/15	2.15	2.48	0.16	04/07/15		3.28	0.00	04/30/15		1.86	0.00	05/16/15	0.64	3.05	0.06	06/01/15		3.67	0.03
03/03/15	0.62	2.15	0.10	04/08/15		3.01	0.06	05/01/15		2.28	0.00	05/17/15	1.13	3.28	0.18	06/02/15		3.89	0.25
03/04/15	2.19	2.76	0.34	04/09/15		1.64	0.12	05/02/15		2.32	0.00	05/18/15	0.63	2.96	0.11	06/03/15		3.99	0.10
03/05/15	3.71	2.70	0.31	04/10/15		2.98	0.02	05/03/15		2.72	0.00	05/19/15	0.90	3.09	0.13	06/04/15		4.19	0.15
03/06/15	1.09	1.88	0.14	04/11/15		3.60	0.08	05/04/15		2.69	0.00	05/20/15	0.68	2.87	0.08	06/05/15		3.90	0.19
03/07/15	1.29	2.55	0.24	04/12/15		3.19	0.00	05/05/15		0.14	0.00	05/21/15	1.00	3.56	0.00	06/06/15		3.93	0.05
03/08/15	0.74	1.84	0.24	04/13/15		2.50	0.00	05/06/15		1.93	0.05	05/22/15	Meter Down	3.79	0.13	06/07/15		4.05	0.18
03/09/15	1.46	2.00	0.35	04/21/15		2.20	0.00	05/07/15	0.56	1.93	0.09	05/23/15		3.05	0.24	06/08/15		4.01	0.07
03/10/15	2.47	3.02	0.18	04/22/15		2.15	0.05	05/08/15	0.30	1.92	0.00	05/24/15		3.17	0.21	06/09/15		3.84	0.18

	FGD Sump (MGD)	Master Sump (MGD)	FGD WWTP (MGD)	FGD Sump w/out WWTP (MGD)
Average Flow:	1.18	2.72	0.11	1.07
Max. Avg. Daily Flow:	3.71	4.19	0.35	3.36

To account for additional volume destined for the LVWWTS during a larger storm event, a 25-year, 24-hour storm event was analyzed for the contributing drainage areas for both the FGD Yard Sumps and the Master Sump. The hydrologic calculations and analytical results are included in **Appendix A** for reference and summarized in **Table 5** below.

Table 5: Contact Stormwater Runoff Estimate

Drainage Area	Acres	25-year. 24-hour Storm Event (gallons)
FGD Sump	10.8	1,683,023
Master Sump	22.9	3,567,096
Coal Pile Runoff	18.8	2,404,132
Total:	**52.5**	**7,654,251**

2.1.2.3 Metal Cleaning Waste Treatment Basin

The Metal Cleaning Waste Treatment Basin is used during maintenance activities requiring wash water (typically in the fall and spring) during scheduled shutdown of a power generation unit. The discharge is sent to the Master Sump. The Master Sump (via a separate pipe system) is diverted to the Metal Cleaning Waste Treatment Basin for pH adjustment of the water to facilitate metals precipitation. The outfall of the basin is an internal discharge monitoring point included in the Station's VPDES permit. This flowrate and corresponding volume was not included in the LVWWTS system average flow, since the Metal Cleaning Waste Treatment Basin discharge is a controlled flow that can be managed by the Station and discharged when excess volume is available in the LVWWTS.

2.1.2.4 Coal Pile Runoff Basin

The estimated volume from the Coal Pile Runoff Basin was determined by hydrologic analysis using the assumption and analysis approach presented in **Section 2.1.2.1** above. This runoff volume was estimated using a 25-year, 24-hour storm event. Stormwater runoff (up to a 25-year, 24-hour storm event) from the coal pile will be directed to the LVWWTS. Stormwater runoff in excess of the 25-year, 24-hour storm event will discharge through an emergency spillway to an existing sediment basin that discharges to a conveyance channel leading to the Thermal Channel. The hydrologic calculations for the coal pile runoff are included in **Appendix A**. The design of the Coal Pile Runoff basin and the associated lift station is further described in **Section 2.2.4.3.**

2.1.2.5 S-Ditch Pump Station

The S-Ditch pump station provides containment pumping in the event of a pipe leak or rupture within the containment channel. Although this is an identified input to the LVWWTS, the flows and associated volumes are considered intermittent. Therefore, the S-Ditch pump station flow rate was not included in the overall design flow rates for the LVWWTS.

2.1.2.6 Upper Ash Pond (UAP) Toe Drain

The volume from the UAP Toe Drain is estimated based on the anticipated pump sizes proposed for the system. The UAP Toe Drain is expected to have minimal contribution to the overall planned daily volume anticipated at the LVWWTS. The average and maximum flows from the toe drain were based on two (2) and four (4) 70 gallon per minute pumps operating for 24 hours, respectively.

2.1.2.7 Lower Ash Pond (LAP) Toe Drain

The volume from the LAP Toe Drain is estimated based on one (1) and two (2) 50 gallons per minute pumps operating for 24 hours, to get the average and maximum flow rates, respectively. The LAP Toe Drain discharge is also expected to have minimal contribution to the overall planned daily volume anticipated at the LVWWTS.

2.1.2.8 FFCP Management Facility

The FFCP Management Facility (a CCR landfill) will discharge both leachate and contact stormwater. The estimated leachate discharge is based on the HELP model, and the contact stormwater discharge estimate is based on hydrologic modeling both prepared by and published by Golder Associates within the FFCP Management Facility Solid Waste Permit (SWP) No. 609. The discharge pipe for the contact stormwater for this facility will be directed to the LVWWTS via the FGD Yard Sumps discharge pipe. The leachate will be directed either through the FGD wastewater treatment plant or a separate metals treatment facility, as needed, and then to LVWWTS via the FGD Yard Sump discharge pipe system.

2.1.2.9 Fly Ash Silo Facility

The Fly Ash Silo Facility will discharge contact stormwater into a local sump containing two (2) 400 gallons per minute pumps. The sump is approximately 343,000 gallons and is designed to contain a 25-year, 24-hour storm event. The stormwater will be pumped from the sump into the same discharge line as the FFCP Management Facility, which will be directed to the LVWWTS via the FGD Yard Sump discharge pipe system.

2.1.2.10 Total Generation

Based on the wastewater inputs described above, a summary of the wastewater generation input flows is provided in **Table 6** below.

Table 6: Wastewater Generation Summary

Description	Average Daily Flow (MGD)	Stormwater Flow (MGD)	Remarks
Master Sump	2.72	3.6	See Tables 4 and 5
S-Ditch Pumps	N/A	N/A	Not applicable since this input is intermittent.
FGD Yard Sumps	1.07	1.7	See Tables 4 and 5
FGD WWTP	0.11	N/A	See Table 4
FFCP Management Facility	0.08	0.4	Determined from Golder Associates Data published in SWP No. 609
LAP Toe Drain	0.20	N/A	Based on Pump Rates
UAP Toe Drain	0.20	N/A	Based on Pump Rates
Coal Pile Runoff	N/A	2.4	See Table 5
Fly Ash Silo Facility	N/A	0.4	Based on anticipated contact stormwater containment volume
Total:	**4.38MGD**	**8.5MGD**	

The total average daily volume is estimated to be approximately 4.38 million gallons per day or **3,042 gallons per minute**. The daily maximum average volume is the total of the estimated stormwater flow from a 25 year, 24-hour storm event and the estimated average daily volume. The resultant maximum daily average flow rate is **8,945 gallons per minute**.

It should be noted that the flow volume estimates above are based on measured daily averages; however, instantaneous pumping outputs could have higher flowrates for periods of time. Pump information for the FGD Yard Sumps and the Master Sump, along with other proposed pumps being installed with the LVWWTS is provided below in **Table 7**.

Table 7: Pump Flowrate Summary

Pump Location	Flowrate
FGD Yard Sump	17,500 gpm
Master Sump	12,000 gpm
Coal Pile Runoff	250 gpm
Lower Ash Pond Toe Drain	275 gpm
Upper Ash Pond Toe Drain	275gpm
FGD WWTP	300 gpm
Landfill Leachate	1,300 gpm
Landfill Contact Stormwater	275 gpm
Fly Ash Silo Area	800 gpm
Total:	**32,975 gpm**

The maximum anticipated flow rate of 32,975 gallons per minute was used to check the hydraulic capacity at critical points in the system.

2.1.3 Sample Collection Methodology

Representative samples for chemical analysis were collected for each process or stormwater stream anticipated to discharge through the LVWWTS, including discharges from the Master Sump, the FGD wastewater treatment plant, FGD Yard Sumps, Metal Cleaning Waste Treatment Basin, and UAP toe drains, as well as stormwater runoff from the S-Ditch and coal pile runoff. Multiple samples were collected for each discharge except for the Metal Cleaning Waste Treatment Basin discharge. Due to the consistency of the discharge characteristics and the highly intermittent nature of the discharge, one sample was collected of the Metal Cleaning Waste Treatment Basin discharge. Samples representative of the FFCP landfill leachate were produced using a leachate column procedure and representative ash samples.

The intermittent nature of the process water discharges and stormwater runoff meant that grab sample collection was the most reliable means of sample collection. Field parameters, such as pH, dissolved oxygen, oxidation-reduction potential, conductivity, conductance, and temperature, were measured in the field at the time of sample collection.

The samples, except for the leachate column samples, were tested and logged at Test America in Pittsburgh, Pennsylvania. Leachate column test samples were tested and logged at Air, Water, & Soil Laboratories, Inc. in Richmond, Virginia.

A complete list of all the samples and the resultant concentrations were included in the VPDES permit application package.

2.2 Design Approach and Methods

2.2.1 Hydraulic Effluent Limitations

The discharge point for the LVWWTS is internal Outfall 301, a new outfall that will be located in the existing Thermal Channel up-gradient from existing Outfall 003. The hydraulic effluent limitation for this internal outfall is a maximum daily flow of 6 million gallons per day in accordance with the Station's VPDES permit. The effluent from the LVWWTS will not exceed this value and will be monitored by the Station and controlled at the outfall accordingly. Internally, the LVWWTS will manage variable flow rates through equalization within the system.

As discussed in Section 2.1 above, the process water existing flows were measured in the field, and the stormwater runoff contribution was estimated hydrologically using a 25-year, 24-hour storm event. Other design criteria were based on Station operational requirements, and will be discussed in the following sections. For the purpose of this evaluation, the LVWWTS will be sized considering the average daily volume of process water of 4.38 million gallons per day, with a maximum average daily volume of 12.9 million gallons considering both the average daily process volume and the design storm event.

2.2.2 Facility Siting

Site locations for the LVWWTS were limited at the Station due to the number of projects and plans associated with the integrated ash conversion goals at the Station. The majority of the Station wastewater streams are currently routed to the LAP for discharge through existing Outfall 004. Therefore, the logical location for the LVWWTS would be in the vicinity of the LAP. However, the areas adjacent to the LAP are in the vicinity of environmentally sensitive areas (i.e. wetlands and flood plains) and, therefore, higher ground was sought.

The final location of the new LVWWTS is an area of the Station property that has previously been used as a soil borrow area, with portions historically used as a shooting range. The higher ground afforded less impact to environmentally sensitive areas, was of sufficient size, and was void of existing utilities. In addition, the location is in the proximity of the Thermal Channel, thereby accommodating an efficient discharge location. Lastly, this area has already been disturbed with the majority of the vegetation removed during previous activities. The LVWWTS is comprised of many components, including the Coal Pile Runoff Basin, the EQ Basin, the Discharge Basin, and future treatment systems, as needed, that will be identified in future CER submittals. **Figure 1** depicts the locations of the various LVWWTS components.

2.2.3 General Wastewater Management Approach

Related to the facility siting is the discussion of equalization of the wastewater inputs prior to or after the future primary treatment scheme that will be covered in Phase 2. The resulting treatment scheme will likely require either an active management approach or, a more passive management approach. Given the geographical context of the site, available space, and future plans for the Station, space was very limited. A holding basin was needed prior to discharge to the Thermal Channel to ensure any upsets in the treatment scheme could be detained for a period of time and recirculated back through the primary treatment system, as needed. In addition, equalization prior to treatment allows for multiple wastewater inputs with varying flow rates and quality to be mixed and stabilized so that the flowrates and wastewater quality after equalization are more constant. The more stable and constant parameters allow for a plant operator to manage the treatment scheme passively, allowing the controls to adapt with minor changes over a longer period of time.

2.2.4 LVWWTS Operational Requirements

In addition to the effluent limitations and other requirements established in the Station's VPDES permit, the Station has several operational requirements to ensure the LVWWTS is integrated efficiently into the overall Station operation. A list of operational considerations that will be included in the LVWWTS design is provided below:

2.2.4.1 Equalization (EQ) Basin

- The EQ Basin will serve as the primary equalization for the LVWWTS discharge, which will require both a wet volume to integrate the incoming wastewater into a less variable water quality stream and a surge volume to address the influx of wastewater during storm events.
- The EQ Basin will have multiple level pipe discharges similar to the Metal Cleaning Waste Treatment Basin configuration that will lead to a lift station. The lift station will be comprised of three (3) 3,000 gallons per minute pumps that will discharge to the down-gradient LVWWTS Discharge Basin. The multi-level pipe system will allow the Station to control the discharge.
- The EQ Basin will serve as the primary Oil and Grease (O&G) containment for the Station. Oil collection booms will be placed strategically within the EQ Basin sufficient to allow for the rise and fall of the water surface. The Station will remove and appropriately dispose of the O&G from the surface of the water, as needed.
- The EQ Basin will have the capacity to hold approximately two (2) days of surge capacity, which is approximately 12 million gallons (2 days at the maximum discharge rate to the Thermal Channel of 6 million gallons per day). Consequently,

the wet volume will vary and along with it the residence time within the EQ Basin. The residence time will be adjusted, as needed, based on effluent readings to foster additional solids settling within the permanent pool.

- The EQ Basin controls will include motor operated slide gates located on the multi-level discharge pipes. These valves will control the wet volume (residence time) and surge capacity within the EQ Basin. The lift station pumps will be controlled remotely and will be operated based on the desired pumping rate using level indication within the EQ Basin and the lift station wet well area.
- The EQ Basin will be lined with a geomembrane with a concrete wear pad and driving surface at the bottom to facilitate cleaning. An under liner drainage system will also be included to have the ability to remove any hydrostatic pressure due to high groundwater conditions, if experienced, and to monitor the presence of any potential under liner liquids.

2.2.4.2 Discharge Basin

- The Discharge Basin will have the ability to maintain an operational water level within the basin prior to discharge to Outfall 301. The Discharge Basin will also serve as an additional equalization basin to control larger storm events or larger volumes of operational discharges.
- The Discharge Basin will be subdivided with a partition berm. This provides flexibility on how the Discharge Basin is used and discharged.
- The Discharge Basin will have multiple level pipe discharges, which will allow the Station to control the discharge rate and the permanent pool elevation. Consequently, this results in the need for two sets of multilevel discharge pipe systems (one on each side of the partition) and a set of discharge vaults. The Discharge Basin controls will include motor operated slide gates located on the multi-level discharge pipes. These valves will control the wet volume (permanent pool) and surge capacity within the Discharge Basin. A minimal wet volume will be maintained within the Discharge Basin to allow for additional surge capacity in larger storm events or larger volumes of operational discharges above and beyond the available surge capacity in the EQ Basin.
- Recirculation from the Discharge Basin (either side of the partition berm) back to the EQ Basin is also included. A pump will be included in one of the discharge vaults with a recirculation pipe back to the EQ Basin inlet structure.
- The effluent system from the Discharge Basin will have a meter and a sampling location for VPDES permit compliance.

- The Discharge Basin will be designed to discharge the effluent from the basin into the Thermal Channel through an underwater diffuser structure.
- The Discharge Basin will be lined with a geomembrane with a concrete wear pad and driving surface at the bottom to facilitate cleaning. An under liner drainage system will also be included to have the ability to remove any hydrostatic pressure due to high groundwater conditions, if experienced, and to monitor the presence of any potential under liner liquids.

2.2.4.3 Coal Pile Runoff Basin

- The Coal Pile Runoff Basin is being designed to hydraulically pass a 25-year, 24-hour storm event without engaging the emergency spillway. The basin will include a pump station with a duplex pump system.
- A sampling port will be included to obtain samples during a pumping event.
- A recirculation line will be plumbed off the force main to provide flexibility for adding agents or other settling additives, as needed, to allow for pre-treatment during the interim Phase 1 stage or future phases.
- Given the limited available space, the outfall for the Coal Pile Basin's emergency spillway will be a drainage inlet at the existing culvert outfall located at the coal pile, which is currently served by the existing coal pile sediment basin. The existing sediment basin discharges to a conveyance channel that leads to a stormwater outfall at the Thermal Channel.

2.2.4.4 Metal Cleaning Waste Treatment Basin

- The Metal Cleaning Waste Treatment Basin will be monitored in accordance with established effluent limitations for internal Outfall 303 in the Station's VPDES permit.
- The basic operation for the basin discharge will remain as it is currently operated via an existing sump and valve system. The existing butterfly valves will be opened so sediment will not be displaced outside of the basin. The existing sump will remain as part of the LVWWTS, however, a new larger connection pipe will be constructed to direct the discharge to a new adjacent lift station. The lift station will consist of two (2) submersible pumps that will pump the discharge to the inlet of the EQ Basin. The pump system can be operated as a single pump or as a duplex pumping system.
- A sampling port will be included to obtain samples during a pumping event.

2.3 Pilot Treatment Systems and Contingency

Contingency has been planned into Phase 1 portions of the LVWWTS through the use of recirculation systems and the ability to add mobile treatment systems, as needed.

2.3.1 Mobile Treatment System

Dominion will utilize a vendor to provide mobile treatment systems, as needed, to achieve the interim VPDES permit effluent limitations at internal Outfall 301. For the LVWWTS, a mobile treatment system would be placed, as needed, at a valve vault location adjacent to the EQ Basin. The mobile treatment system would then discharge via a temporary pipe or hose into the Discharge Basin prior to discharging through Outfall 301 or be recirculated back to the inlet of the EQ Basin.

2.3.2 Recirculation

Recirculation is part of the LVWWTS design in two locations: recirculation from the Discharge Basin back to the EQ Basin and recirculation from the outlet of the EQ Basin back to the inlet of the EQ Basin. Recirculation will be used, as needed, to provide additional residence time for solids settling in the EQ Basin or to send effluent from the Discharge Basin back to the EQ Basin or a mobile treatment system for additional treatment, as needed.

3. PHASE 2 OF LVWWTS (placeholder for future submittal)

4. PHASE 3 OF LVWWTS (placeholder for future submittal)

FIGURES

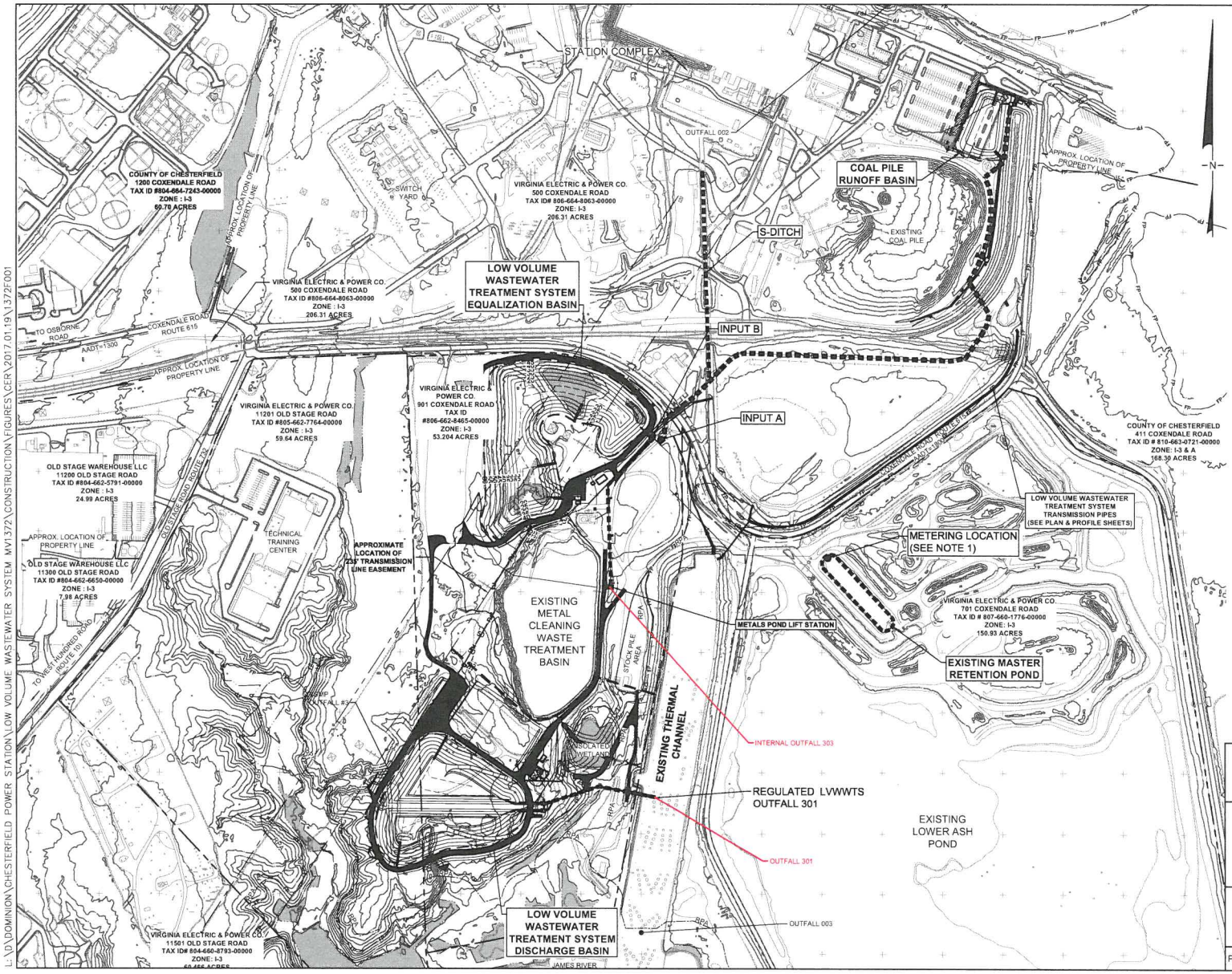

INPUT A: INCLUDES THE FGD YARD SUMP, THE MASTER SUMP (WITH AN EMERGENCY PIPE), LANDFILL LEACHATE AND CONTACT STORMWATER, AND FGD WWTP. ALL THESE INPUTS TO THE LVWWTS ORIGINATE WITHIN THE STATION COMPLEX.

INPUT B: INCLUDES THE METAL CLEANING WASTE TREATMENT BASIN, THE COAL PILE RUNOFF BASIN, THE UPPER ASH POND TOE DRAINS, AND THE LOWER ASH POND TOE DRAINS. ALL THESE INPUTS TO THE LVWWTS ORIGINATE FROM SOURCES OUTSIDE THE STATION COMPLEX.

NOTE:

1. THE METERING LOCATION IS AT THE INLET OF THE EXISTING MASTER RETENTION POND. DATA WAS COLLECTED AT THE MASTER AND FGD YARD SUMP DISCHARGES.

Dominion

CHESTERFIELD POWER STATION
LVWWTS - PHASE 1
OUTFALL LOCATIONS
VPDES PERMIT NO. VA0004146

Geosyntec consultants

PROJECT NO: MV1372 | JANUARY 2017

FIGURE 1

L:\D\DOMINION\CHESTERFIELD POWER STATION\LOW VOLUME WASTEWATER SYSTEM MV1372\CONSTRUCTION\FIGURES\CER\2017.01.19\1372F001.dwg

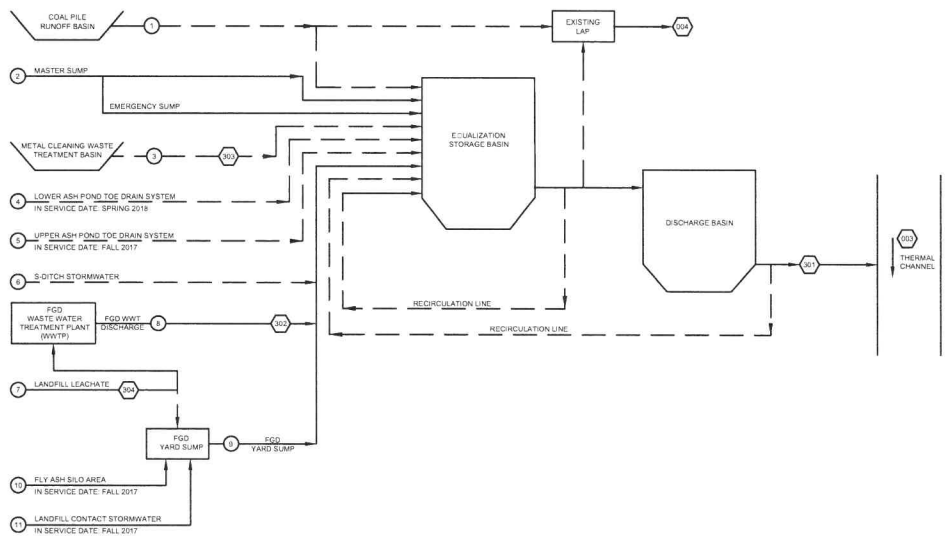

LEGEND

- INTERMITTENT FLOW
- CONTINUOUS FLOW
- (1) WASTEWATER INPUT (SEE TABLE)
- (301) REGULATED OUTFALL

REGULATED OUTFALL SUMMARY				
OUTFALL ID	MINIMUM (MGD)	AVERAGE (MGD)	MAXIMUM (MGD)	NOTES
003	57.28	N/A	N/A	THERMAL CHANNEL OUTFALL
004	N/A	N/A	22.23	LOWER ASH POND OUTFALL
301	N/A	4.30	6.00	LOW VOLUME WASTEWATER TREATMENT SYSTEM OUTFALL
302	N/A	0.11	0.35	FGD WASTEWATER TREATMENT PLANT OUTFALL
303	N/A	2.70	5.00	METAL CLEANING WASTE TREATMENT BASIN OUTFALL
304	N/A	N/A	0.19	LANDFILL LEACHATE OUTFALL

ID	DESCRIPTION	PROCESS FLOW (MGD)		STORM FLOW (MGD)	NOTES
		AVG	MAX		
1	COAL PILE RUNOFF POND	N/A	N/A	2.4	18.8 ACRES/25-YEAR STORM EVENT
2	MASTER SUMP	2.72	4.01	3.6	PROCESS FLOW - METERED BETWEEN 3/1/15 AND 6/1/15 STORM FLOW - 22.8 ACRES/25-YEAR STORM EVENT
3	METAL CLEANING WASTE TREATMENT	2.70	5.00	N/A	AVG BASED ON 8 DAY DRAINAGE MAX BASED ON 3 DAY DRAINAGE
4	LOWER ASH POND TOE DRAIN	0.20	0.40	N/A	PROCESS FLOW - 2 PUMPS @ 70 GPM (AVG.) 4 PUMPS @ 70 GPM (MAX.)
5	UPPER ASH POND TOE DRAIN	0.20	0.40	-	PROCESS FLOW - 2 PUMPS @ 70 GPM (AVG.) 4 PUMPS @ 70 GPM (MAX.)
6	S-DITCH STORMWATER SUMP	N/A	N/A	N/A	ONLY USED DURING A PIPE BREAK SCENARIO
7	LANDFILL LEACHATE	0.08	0.19	0.4	BASED ON PHASED BUILDOUT OF LANDFILL HELP MODEL
8	FGD WWT	0.11	0.35	N/A	METERED BETWEEN 3/1/15 AND 6/1/15
9	FGD YARD SUMP	1.07	3.36	1.7	PROCESS FLOW - METERED BETWEEN 3/1/15 AND 6/1/15 STORM FLOW - 10.8 ACRES/25-YEAR STORM EVENT
10	FLY ASH SILO STORMWATER AREA	N/A	N/A	0.4	ESTIMATED RUNOFF FLOW
11	LANDFILL CONTACT STORMWATER	N/A	N/A	0.4	BASED ON LANDFILL PHASED HYDRAULIC MODEL FOR 25-YEAR, 24 HOUR STORM EVENT

NOTES:

1. THE PURPOSE OF THIS DRAWING IS TO PROVIDE A GENERAL FLOW DIAGRAM FOR THE PURPOSE OF UNDERSTANDING THE OVERALL TREATMENT SYSTEM. DETAILS ASSOCIATED WITH THIS SYSTEM WILL NOT APPEAR ON THIS DRAWING. PLEASE SEE THE PROCESS AND INSTRUMENTATION DIAGRAM FOR SPECIFIC DETAILS AS IT RELATES TO PIPE AND VALVES LOCATIONS AND MATERIALS.
2. HEAT TRACE REQUIREMENTS ARE NOT SHOWN ON THIS PLAN. HEAT TRACE REQUIREMENTS AND LOCATIONS ARE REFLECTED ON THE PROCESS AND INSTRUMENTATION DIAGRAM.

Dominion®

PROCESS FLOW DIAGRAM

Geosyntec consultants

FIGURE 2

PROJECT NO: MV1372

JANUARY 2017

L:\D\DOMINION\CHESTERFIELD POWER STATION\LOW VOLUME WASTEWATER SYSTEM MV1372\CONSTRUCTION\FIGURES\CER\2017.01.19\1372F002

APPENDIX A

Hydrologic Calculations

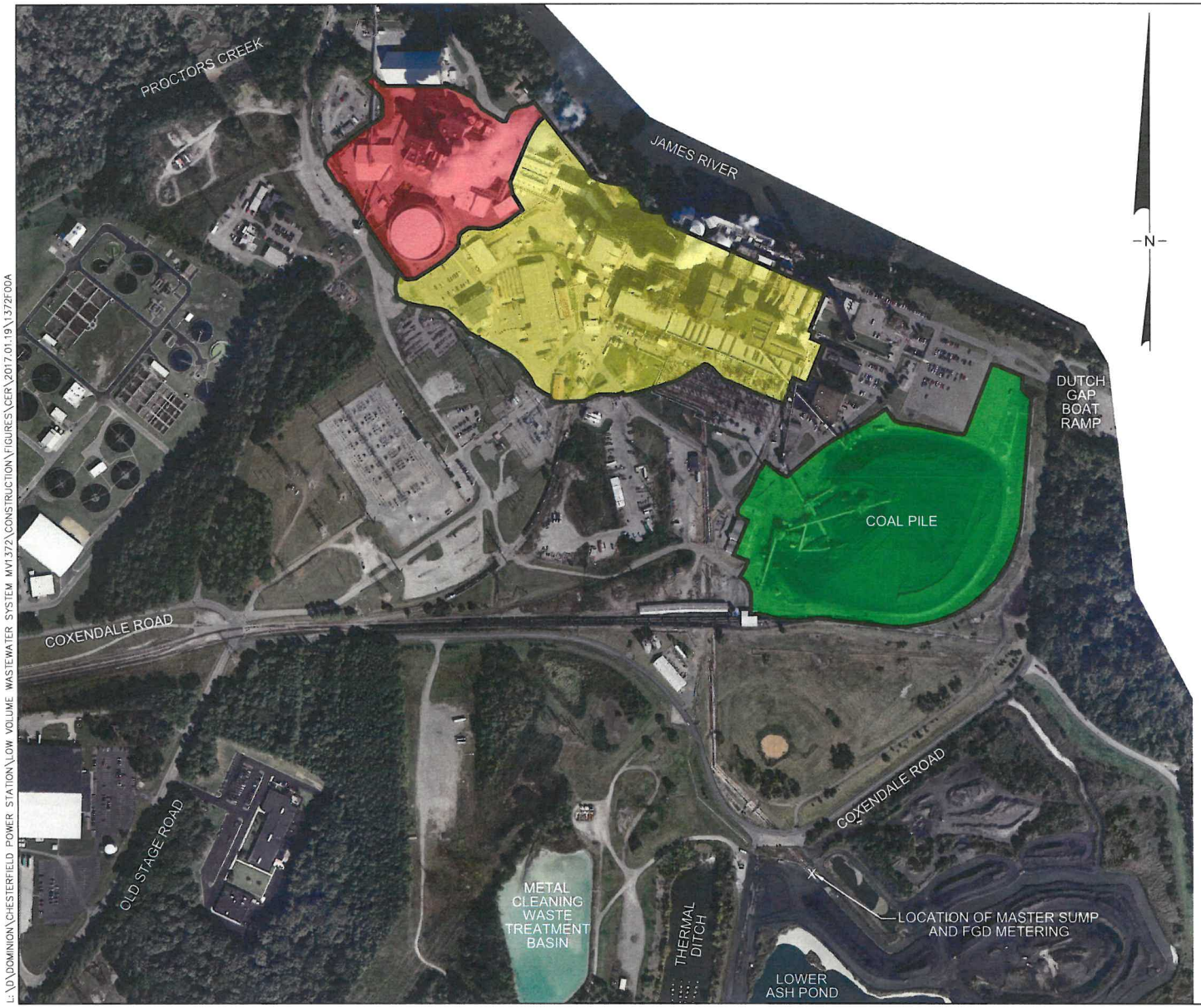

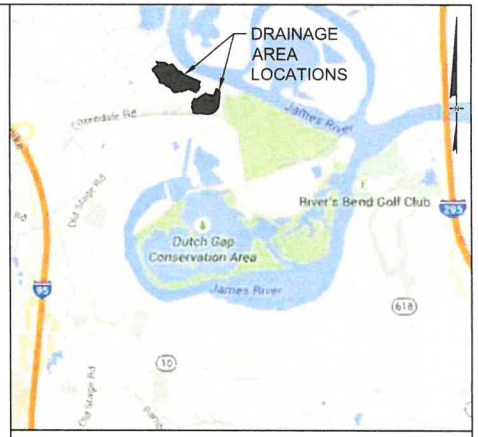

VICINITY MAP
SCALE 1"=5,000'

DRAINAGE AREA LEGEND

- FGD SUMP AREA (9.33 ACRES□1.46 MG PER 25-YR STORM)
- MASTER SUMP AREA (22.87 ACRES□3.57 MG PER 25-YR STORM)
- COAL PILE AREA (18.75 ACRES□2.81 MG PER 25-YR STORM)

0 400' 800'
SCALE IN FEET

Dominion

FIGURE A
DRAINAGE AREA MAP
CHESTERFIELD POWER STATION
CHESTERFIELD COUNTY, VA

Geosyntec consultants

FIGURE A

PROJECT NO: MV1372 | JANUARY 2017

L:\D\DOMINION\CHESTERFIELD POWER STATION\LOW VOLUME WASTEWATER SYSTEM MV1372\CONSTRUCTION\FIGURES\CER\2017.01.19\1372F00A

Summary for Subcatchment 1S: FGD SUMP

Runoff = 88.24 cfs @ 11.99 hrs, Volume= 5.165 af, Depth= 5.74"

Runoff by SCS TR-20 method, UH=SCS, Weighted-CN, Time Span= 0.00-54.00 hrs, dt= 0.01 hrs
Type II 24-hr 25-Year Rainfall=6.10"

	Area (ac)	CN	Description
	1.190	89	<50% Grass cover, Poor, HSG D
*	9.600	98	Impervious Area, HSG D
	10.790	97	Weighted Average
	1.190		11.03% Pervious Area
	9.600		88.97% Impervious Area

Tc (min)	Length (feet)	Slope (ft/ft)	Velocity (ft/sec)	Capacity (cfs)	Description
2.7	200	0.0100	1.25		**Sheet Flow, SHEET FLOW** Smooth surfaces n= 0.011 P2= 3.50"
5.1	425	0.0047	1.39		**Shallow Concentrated Flow, SHALLOW CONCENTRATED FLOV** Paved Kv= 20.3 fps
7.8	625	Total			

Subcatchment 1S: FGD SUMP

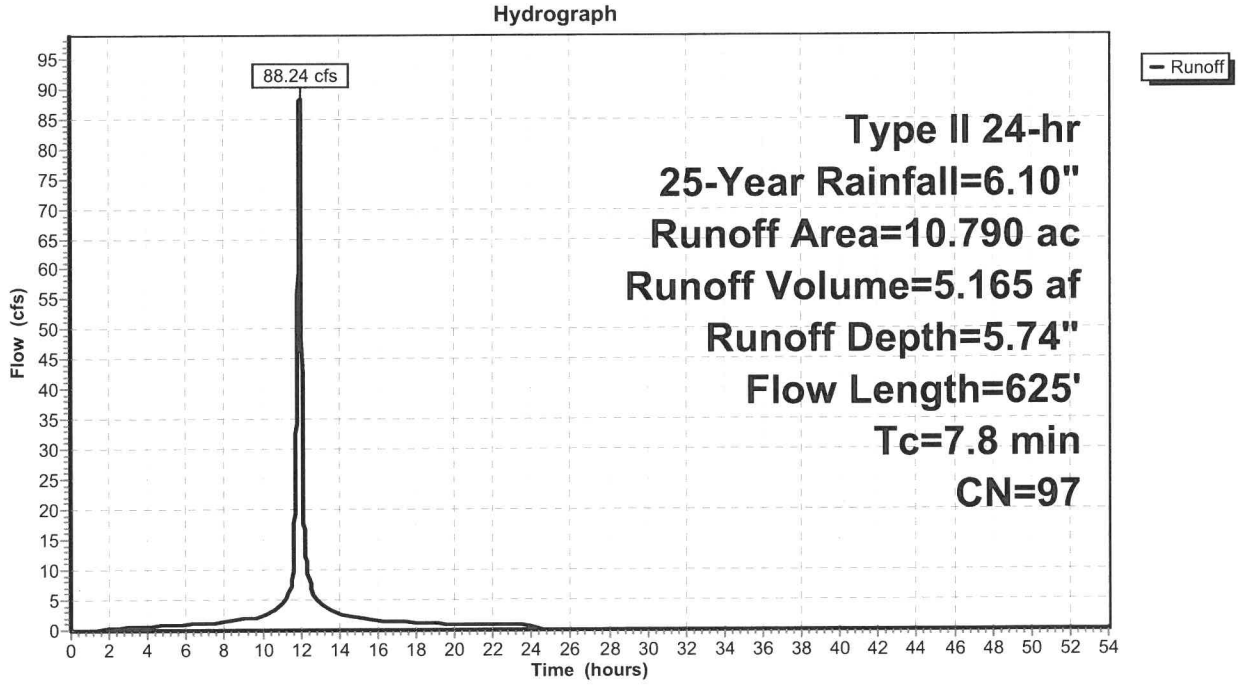

Summary for Subcatchment 2S: MASTER SUMP

Runoff = 194.24 cfs @ 11.97 hrs, Volume= 10.947 af, Depth= 5.74"

Runoff by SCS TR-20 method, UH=SCS, Weighted-CN, Time Span= 0.00-54.00 hrs, dt= 0.01 hrs
Type II 24-hr 25-Year Rainfall=6.10"

	Area (ac)	CN	Description
	1.580	89	<50% Grass cover, Poor, HSG D
*	21.290	98	Impervious Area, HSG D
	22.870	97	Weighted Average
	1.580		6.91% Pervious Area
	21.290		93.09% Impervious Area

Tc (min)	Length (feet)	Slope (ft/ft)	Velocity (ft/sec)	Capacity (cfs)	Description
1.7	200	0.0300	1.94		**Sheet Flow, SHEET FLOW** Smooth surfaces n= 0.011 P2= 3.50"
2.9	295	0.0068	1.67		**Shallow Concentrated Flow, SHALLOW CONCENTRATED FLOV** Paved Kv= 20.3 fps
2.0	875	0.0469	7.47	11.95	**Channel Flow, CHANNEL FLOW** Area= 1.6 sf Perim= 12.4' r= 0.13' n= 0.011 Concrete pipe, straight & clean
6.6	1,370	Total			

Subcatchment 2S: MASTER SUMP

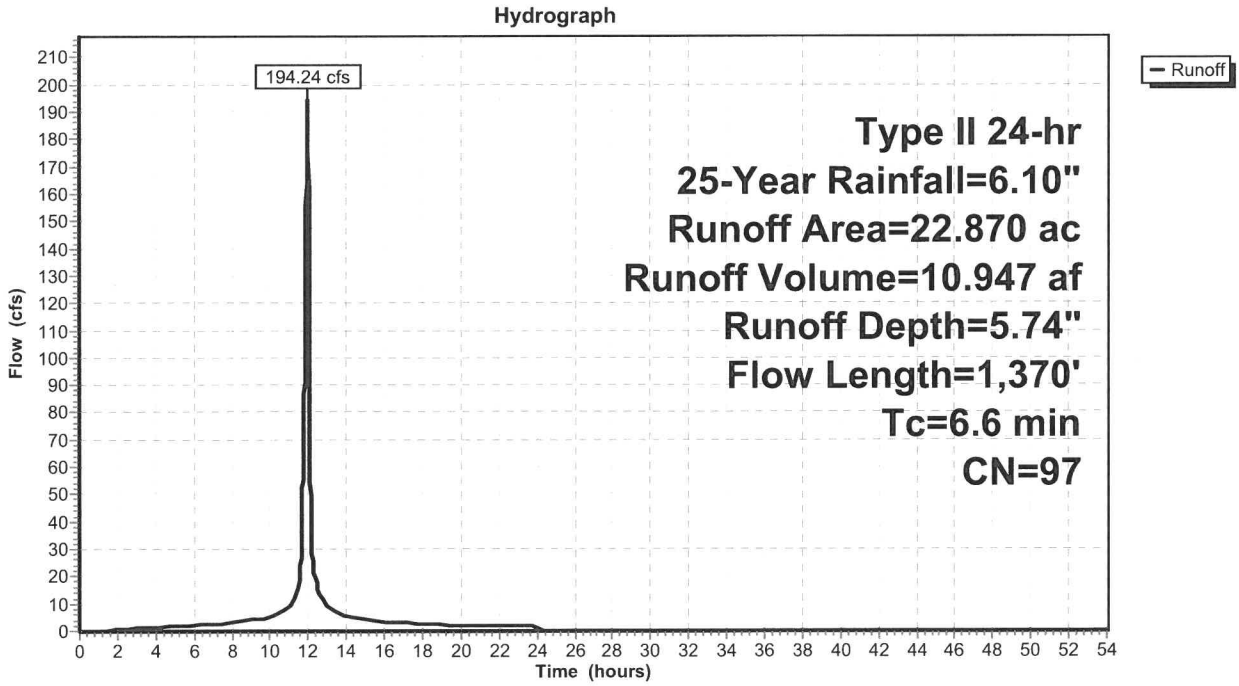

Summary for Subcatchment 3S: COAL PILE

Runoff = 99.12 cfs @ 12.10 hrs, Volume= 7.378 af, Depth= 4.72"

Runoff by SCS TR-20 method, UH=SCS, Weighted-CN, Time Span= 0.00-54.00 hrs, dt= 0.01 hrs
Type II 24-hr 25-Year Rainfall=6.10"

	Area (ac)	CN	Description
	2.720	89	<50% Grass cover, Poor, HSG D
*	12.190	85	Coal Ash, HSG D
*	3.840	98	Impervious Area, HSG D
	18.750	88	Weighted Average
	14.910		79.52% Pervious Area
	3.840		20.48% Impervious Area

Tc (min)	Length (feet)	Slope (ft/ft)	Velocity (ft/sec)	Capacity (cfs)	Description
14.8	200	0.0650	0.22		**Sheet Flow, SHEET FLOW** Grass: Dense n= 0.240 P2= 3.50"
0.9	190	0.1175	3.43		**Shallow Concentrated Flow, SHALLOW CONCENTRATED FLOV** Nearly Bare & Untilled Kv= 10.0 fps
2.5	790	0.0150	5.21	52.11	**Channel Flow, CHANNEL FLOW** Area= 10.0 sf Perim= 20.0' r= 0.50' n= 0.022
0.4	535	0.0224	19.85	389.79	**Pipe Channel, PIPE FLOW** 60.0" Round Area= 19.6 sf Perim= 15.7' r= 1.25' n= 0.013
18.6	1,715	Total			
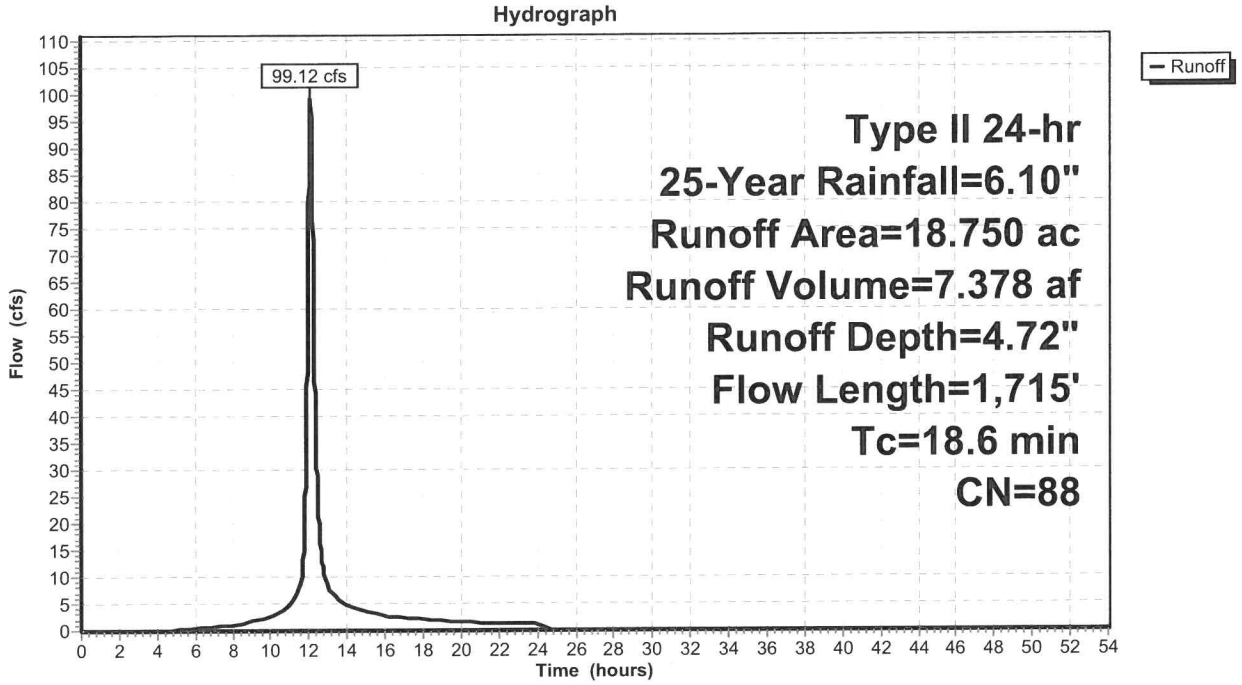
Subcatchment 3S: COAL PILE