MEMORANDUM

DEPARTMENT OF ENVIRONMENTAL QUALITY

Water Division

SUBJECT: Guidance Memorandum No. 96 - 009
Obtaining Dissolved Metals Data

TO: Regional Directors

FROM: Larry G. Lawson, P.E.

DATE: November 19, 1996

COPIES: Regional Permit Managers, Regional Water Permit Managers, Regional Compliance and Enforcement Managers, Alan Anthony, Martin Ferguson, Ron Gregory, Amy Clarke

By Guidance Memorandum No. 93-015, Addendum No. 1 and Amendment No. 1 to it and Guidance Memorandum No. 94-008, we provided you with guidance for preparing VPDES permits based on the water quality standards for toxics. In those guidance documents, we recognized that there were valid concerns regarding the accuracy of historical metals data and that it was inappropriate to use such data for establishing VPDES permit limits. We also recognized that the use of "clean" and/or "ultraclean" analytical protocols may be necessary to obtain and analyze samples to produce reliable measures of the concentrations of toxic metals in both waste waters and in streams. We also recognized that such protocols did not then exist. Thus, we recommended that language be included in permits to require that monitoring for metals should begin several years after the effective date of the permit. It was anticipated that technology would develop rapidly and that the permittee would then have approximately 2 to 3 years to obtain acceptable metals data. It was also anticipated that this data would be available to be submitted with their application for permit reissuance and would be sufficient to allow a determination to be made regarding the need for permit limits for metals. The technology did not develop nearly as rapidly as we had anticipated with the result that some permittees may have difficulty in complying with their permit. We would support enforcement discretion in such cases providing the permittee is now actively engaged in collecting the necessary data.

Since we issued those guidance documents, DEQ staff, along with staff from the Department of Consolidated Laboratory Services (DCLS) have been involved in developing procedures for collecting and analyzing metals samples that are not contaminated and that provide reliable results. At the same time we have been keeping abreast of what is happening at the local and national levels to address this issue and are aware that, although not common, the technology for obtaining reliable dissolved metals data now exists and is available to permittees.

Appended to this guidance document are the following:

Appendix A - Revised Special Monitoring Condition
Appendix B - Selecting the Appropriate Sampling and Analytical Methods
Appendix C - DEQ Methodology for Dissolved Metals Sampling and Analysis at Quantification Levels Less Than The Water Quality Standards
Appendix D - Performance of DEQ Methods
Appendix E - Summary of Quality Control Recommendations for Clean Protocols
Appendix F - Additional Methods and Procedures

Appendix A is our recommended revised special monitoring condition. Appendices B through F to this guidance summarizes the efforts of DEQ to develop acceptable sampling and analytical procedures to obtain the required data. Also included are conclusions and recommendations regarding the availability and applicability of sampling/analytical procedures for obtaining metals data.

We believe that, based on the results of our efforts and those of other parties, acceptable procedures are now available to allow permittees to begin collecting and submitting metals data that will reliably determine if a permit limit for metals is required.

The intent of this guidance is to notify you and our permittees that technology now exists to allow the collection and analysis of uncontaminated dissolved metals samples such that the results are sufficiently reliable to determine if a permit limit is needed and, if so, the numerical value of that limit.

Recommendations:

1. No further delays be allowed for obtaining dissolved metals data where the basis for the delay is unavailable technology.

2. The Regional offices notify those permittees that have the special monitoring condition in their permit that acceptable procedures are now available and they should begin to collect dissolved metals data to submit with their reissuance application or as soon thereafter as possible.

3. The use of the special monitoring condition contained in Appendix A of guidance document #93-015, as amended by guidance document #94-008, be discontinued and the special monitoring condition contained in Appendix A to this guidance be used instead.

If you have any questions on this guidance please contact Dale Phillips at 804-698-4077 or E-Mail at mdphillips@deq.state.va.us

DISCLAIMER:

This document provides technical and procedural guidance for obtaining reliable, contaminant free dissolved metals data. This document is guidance only. It does not establish or affect legal rights or obligations. It does not establish a binding norm and is not finally determinative of the issues addressed. Agency decisions in any particular case will be made by applying the Virginia State Water Control Law, the federal Clean Water Act and their implementation regulations on the basis of the site specific facts when permits are issued.

Appendix A

Revised Special Monitoring Condition

Notice: This revised condition replaces the one contained in Appendix A of guidance document #93-015.

It also replaces the Appendix A contained in guidance document #94-008.

Permit writers should used the condition here in lieu of the earlier ones.

The permittee shall monitor the effluent at outfall xxx for the following substances according to the indicated sample type and frequency. The data shall be submitted with the DMR following the month in which the analyses were conducted. It is the responsibility of the permittee to ensure that the proper QA/QC protocols are followed during the sampling and analytical procedures. The Department will use his data for making specific permit decisions in the future. This permit may be modified for alternatively revoked and reissued to incorporate limits for any the substances listed below.

Chemical	Analysis Number	Quantification level	Sample type	Frequency
Metals				
Arsenic	(i)	(i)	g or 3g	
Arsenic III	(i)	(i)	g or 3g	
Barium	(i)	(i)	g or 3g	
Cadmium	(i)	(i)	g or 3g	
Chromium III *	(i)	(i)	g or 3g	
Chromium VI	(i)	(i)	g or 3g	
Copper	(i)	(i)	g or 3g	
Iron	(i)	(i)	g or 3g	
Lead	(i)	(i)	g or 3g	
Manganese	(i)	(i)	g or 3g	
Mercury	(i)	(i)	g or 3g	
Nickel	(i)	(i)	g or 3g	
Selenium	(i)	(i)	g or 3g	
Silver	(i)	(i)	g or 3g	
Zinc	(i)	(i)	g or 3g	
Pesticides/PCBs				
Aldrin	608	0.5	3g	
Chloropyrifos	622	0.2	3g	
Chlordane	608	0.2	3g	
DDT	608	0.1	3g	
Demeton	(ii)	---	3g	
2,4 dichlorophenoxy acetic acid (2,4,D)	(ii)			
Dieldrin	608	0.1	3g	
Endosulfan I	608	0.1	3g	
Endosulfan II	608	0.1	3g	
Endosulfan sulfate	608	0.1	3g	
Endrin	608	0.1	3g	
Guthion	622	---	3g	
Heptachlor	608	0.1	3g	
Hexachlorocyclohexane (Lindane)	608	0.1	3g	
Malathion	(ii)	---	3g	
Methoxychlor	(ii)	0.2	3g	
Mirex	(ii)	---	3g	
Chemical	Analysis	Quantification	Sample	Frequency

	Number	level	type	
Parathion	(ii)	---	3g	
PCB-1242	608	1.0	3g	
PCB-1254	608	1.0	3g	
PCB-1221	608	1.0	3g	
PCB-1232	608	1.0	3g	
PCB-1248	608	1.0	3g	
PCB-1260	608	1.0	3g	
PCB-1016	608	1.0	3g	
2,4,5 Trichlorophenoxy propionic acid (silvex)	(ii)	---	3g	
Toxaphene	608	5.0	3g	
<u>Base Neutral</u>				
Anthracene	625	10.0	3g	
Benzo(a)anthracene	625	10.0	3g	
Benzo(b)fluoranthese	625	10.0	3g	
Benzo(k)fluoranthene	625	10.0	3g	
Benzo (a) pyrene	625	10.0	3g	
Chrysene	625	10.0	3g	
Dibenzo(a,h)anthracene	625	20.0	3g	
1,2 Dichlorobenzene	625	10.0	3g	
1,3 Dichlorobenzene	625	10.0	3g	
1,4 Dichlorobenzene	625	10.0	3g	
2,4 Dinitrotoluene	625	10.0	3g	
Di-2-Ethylhexyl Phtahlate	625	10.0	3g	
Fluoranthene	625	10.0	3g	
Isophorone	625	10.0	3g	
Indeno(1,2,3-cd)pyrene	625	20.0	3g	
Naphthalene	625	10.0	3g	
Pyrene	625	10.0	3g	
<u>Volatiles</u>				
Benzene	624	10.0	3g	
Bromoform	624	10.0	3g	
Carbon Tetrachloride	624	10.0	3g	
Chlorodibromomethane	624	10.0	3g	
Chloroform	624	10.0	3g	
Chloromethane	624	20.0	3g	
Dichloromethane	624	20.0	3g	
Dichlorobromomethane	624	20.0	3g	
1,2 Dichloroethane	624	10.0	3g	
Ethylbenzene	624	10.0	3g	
Monochlorobenzene	624	50.0	3g	
Tetrachloroethylene	624	10.0	3g	
Toluene	624	10.0	3g	
Trichloroethylene	624	10.0	3g	
Vinyl Chloride	624	10.0	3g	
Chemical	Analysis	Quantification	Sample	Frequency

	Number	level	type
Acid Extractables			
Pentachlorophenol	625	50.0	3g
Phenol	625	10.0	3g
2,4,6 trichlorophenol	625	10.0	3g
Miscellaneous			
Ammonia as NH3-N	350.1	200	c
Total Residual Chlorine	(ii)	---	g
Cyanide	335.2	10.0	g
Dioxin	1613	0.00001	c
Hardness	(ii)	---	c
Sulfate	(ii)	---	c
Tributyltin	(ii)	---	c
xylenes (total)	846/8020	---	3g

Units for the quantification level are micrograms/liter unless otherwise specified.

* If the result of the total chromium analysis is less than or equal to 10 ug/l the result for chromium III can be reported as not quantifiable.

Sample type: c = 24 hour composite unless otherwise specified
g = grab
3g = 1 grab sample every 8 hours. The permittee shall analyze each sample individually and report the average of the three samples.

(i) A specific analysis is not specified for these materials. An appropriate analysis shall be selected from the following list of EPA methods to achieve a quantification level that is less than the wasteload allocation for the material under consideration:

Antimony - 204.1, 204.2, 200.7, 200.8, 1638, 1639
Arsenic - 206.2, 206.3, 200.7, 200.8, 200.9, 1632
Cadmium - 213.1, 213.2, 200.7, 200.8, 200.9, 1637, 1638, 1639, 1640
Chromium - 218.1, 218.2, 218.3, 200.7, 200.8, 200.9, 1639
Chromium IV - 218.4, 1636
Copper - 220.1, 220.2, 200.7, 200.8, 200.9, 1638, 1640
Iron - 236.1, 236.2, 200.7
Manganese - 243.1, 243.2, 200.7, 200.8, 200.9
Mercury - 245.1, 200.7, 200.8, 1631
Nickel - 249.1, 249.2, 200.7, 200.8, 200.9, 1638, 1639, 1640
Selenium - 270.2, 200.7, 200.8, 200.9, 1638, 1639
Silver - 272.1, 272.2, 200.7, 200.8, 200.9, 1638
Zinc - 289.1, 289.2, 200.7, 200.8, 1638, 1639

Quality control/assurance information shall be submitted to document that the required quantification level has been attained.

(ii) Any approved method presented in 40 CFR part 136.

Appendix B

Selecting the Appropriate Sampling and Analytical methods.

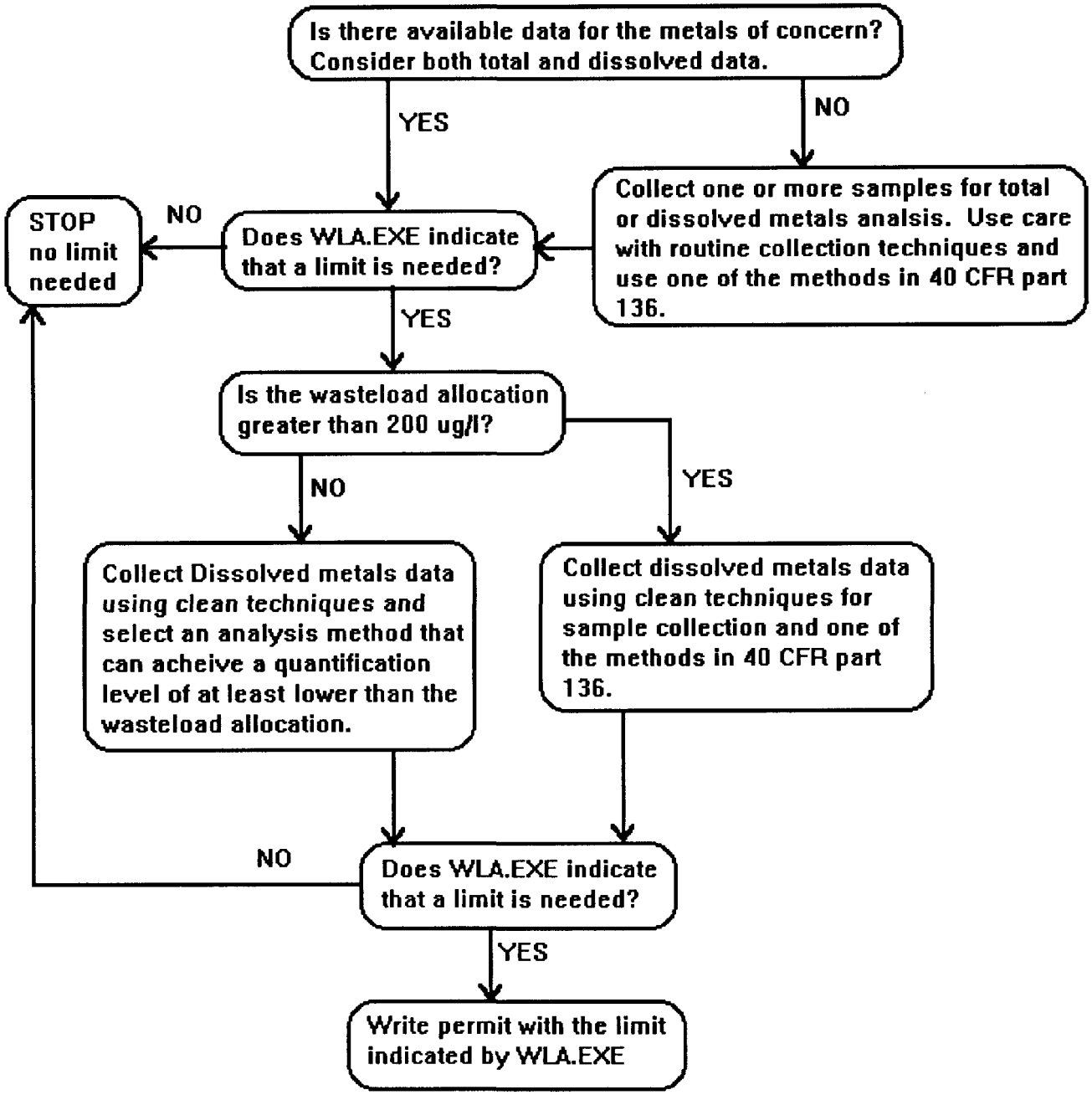

Notes:

Contamination is not generally a concern when the concentrations that need to be evaluated exceed about 200 ug/l. If the wasteload allocation is close to that level then more care is indicated and perhaps clean techniques.

We believe that significant funds may be saved by the step wise approach to determine if clean techniques are necessary for a particular effluent.

Generally the quantification level should be significantly lower than the target concentrations to be analyzed. Clean techniques and DEQ methods should produce quantification levels that are less than the standards. This is sufficient for almost all effluents.

Methods available for the analysis of dissolved metals:

For each metal the applicable analyses and their minimum detection levels (ug/l) are listed as: analysis #(MDL)

Antimony - 204.1(200), 204.2(3), 200.7(32), 200.8(.008), 1638(.0097), 1639(1.9)

Arsenic - 206.2(1), 206.3(2), 200.7(53), 200.8(.02), 200.9(.5), 1632(.002)

Cadmium - 213.1(5), 213.2(.1), 200.7(3.4), 200.8(.02), 200.9(.05), 1637(.0074), 1638(.025), 1639(.023), 1640(.0024)

Chromium - 218.1(50), 218.2(1), 218.3(1), 200.7(6.1), 200.8(.04), 200.9(.1), 1639(.1)

Chromium IV - 218.4(10), 1636(.23)

Copper - 220.1(20), 220.2(1), 200.7(5.4), 200.8(.004), 200.9(.7), 1638(.087), 1640(.024)

Iron - 236.1(30), 236.2(1), 200.7(6.2)

Manganese - 243.1(10), 243.2(.2), 200.7(1.4), 200.8(.007), 200.9(.3)

Mercury - 245.1(.2), 200.7(2.5), 200.8(.2), 1631(.00005)

Nickel - 249.1(40), 249.2(1), 200.7(15), 200.8(.07), 200.9(.6), 1638(.33), 1639(.65), 1640(.029)

Selenium - 270.2(2), 200.7(75). 200.8(1.3), 200.9(.6), 1638(1.2), 1639(.83)

Silver - 272.1(10), 272.2(.2), 200.7(7), 200.8(.004), 200.9(.5), 1638(.029)

Zinc - 289.1(5), 289.2(.05), 200.7(1.8), 200.8(.07), 1638(.14), 1639(.14)

This information can be used to select an appropriate analysis for the metals of concern in a particular effluent and all should perform well providing contamination during sampling and sample preparation is avoided.

Appendix C

DEQ Methodology for Dissolved Metals sampling and Analysis at Quantification Levels Less than the Water Quality Standards.

PRODUCT NOTICE:

The use of name brands, logos or trademarks in this document does not constitute any endorsement by DEQ for those products nor is it to be construed as a recommendation for those specific products. They are used herein for illustrative purposes only to accurately describe the materials actually used by DEQ and its contract laboratory in one specific study.

LABORATORY PROCEDURES:

Analytical methods:

The following methods are recommended:

200.8 - Inductively coupled plasma mass spectroscopy developed by EPA's EMSLC. We recommend that the mass spectrometer be equipped with an ultrasonic nebulizer.

This method is applicable to all the metals except iron.

200.7 - Inductively coupled plasma atomic emission spectroscopy.

This method is applicable to iron.

Both methods are described in EPA publication EPA/600/4-91/010, June 1991.

Most of the controversy concerning dissolved metals is associated with either filtration artifacts or contamination, therefore, we believe that there should be alternative analytical methods that might be suitable provided contamination is avoided during sample collection and preparation. These methods include:

200.9	- EPA/600/4-91/010, June 1991	- all metals
1631	- EPA 821-R-95-027 April 1995, Draft	- mercury
1632	- EPA 821-R-95-028 April 1995, Draft	- arsenic
1636	- EPA 821-R-95-029 April 1995	- hexavalent chromium
1637	- EPA 821-R-95-030 April 1995,	- all metals
1638	- EPA 821-R-95-031 April 1995	- all metals
1639	- EPA 821-R-95-032 April 1995	- all metals
1640	- EPA 821-R-95-033 April 1995	- all metals

Prior to use, these analytical methods should be tested to ascertain if they are sufficient to reach the needed quantification level.

Laboratory water Specifications:

Deionized and filtered, ASTM type III water (DI water)

Particulate matter	none larger than 0.2 µm
Conductivity	≤ 0.25 umhos/cm @ 25°C
resistivity	≤ 4.0 mohms @ 25°C
Total organic carbon	≤ 200 ug/l
Sodium	≤ 10 µg/l
Chloride	≤ 10 µg/l
Total silica	≤ 500 µg/l
Heterotropic bacteria count	≤ 10/100 ml
Endotoxin	≤ 0.25 EU

Ultra Pure Water, ASTM type I water (UP water)

Barnstead type D4700 NANopure deionization system, or its equivalent, producing ASTM type I water.

The specifications for UP water are operational. This water should be routinely tested to demonstrate that no ion counts above general background noise are produced for target analytes and selected target metals.

Laboratory Air Specification:

All equipment cleaning and analytical procedures where a sample or equipment is open to ambient air should be conducted in a class 100 clean bench or clean room. When conducting limited studies with few samples it may be suitable to use a glove box provided it can be routinely demonstrated that the apparatus does not contribute contamination to the samples.

Equipment:

The equipment we used to obtain samples is suitable for both stream and effluent sampling. The critical concerns are clean sampling bottles, tubing, a proper sampling wand and a peristaltic pump. During our testing of the protocols we arranged the pump and battery into a small backpack that makes for easy transportation and use at stream sites but can also be easily used to sample an effluent.

Note: The design of the pump must be such that the central part of the tubing can be loaded into it without passing its open end through slots or holes.

General:

- 12 volt peristaltic pump set to deliver about 500 ml/min.

- 12 volt battery.

- Sampling wand with a snap in attachment point for sample collection tubing.

- Powder free vinyl gloves.

- Plastic bottle carrier with neck strap (optional).

Note: The pumping rate should remain constant throughout all applications once the protocol is set up.

Grab sample equipment (packed in lab and identified as clean):

- 5 foot section of 1/4 inch Teflon tubing

- 4 foot section of flexible peristaltic pump tubing (CFLEX 25)

- 0.45 µm torturous path capsule filter (Gelman #12175, #12176 or equivalent) Our experience is that this filter is sufficiently clean as it comes from the manufacturer and it does not need further cleaning. Other filters should be tested in the laboratory prior by to use to ascertain if a conditioning or cleaning procedure will have to be used to yield acceptable blanks.

- 2, 1 liter, polyethylene bottles

- 2, 2 port bottle caps with closure tube (see fig. 1)

Figure 1. Detail of bottle Cap with sealing tube.

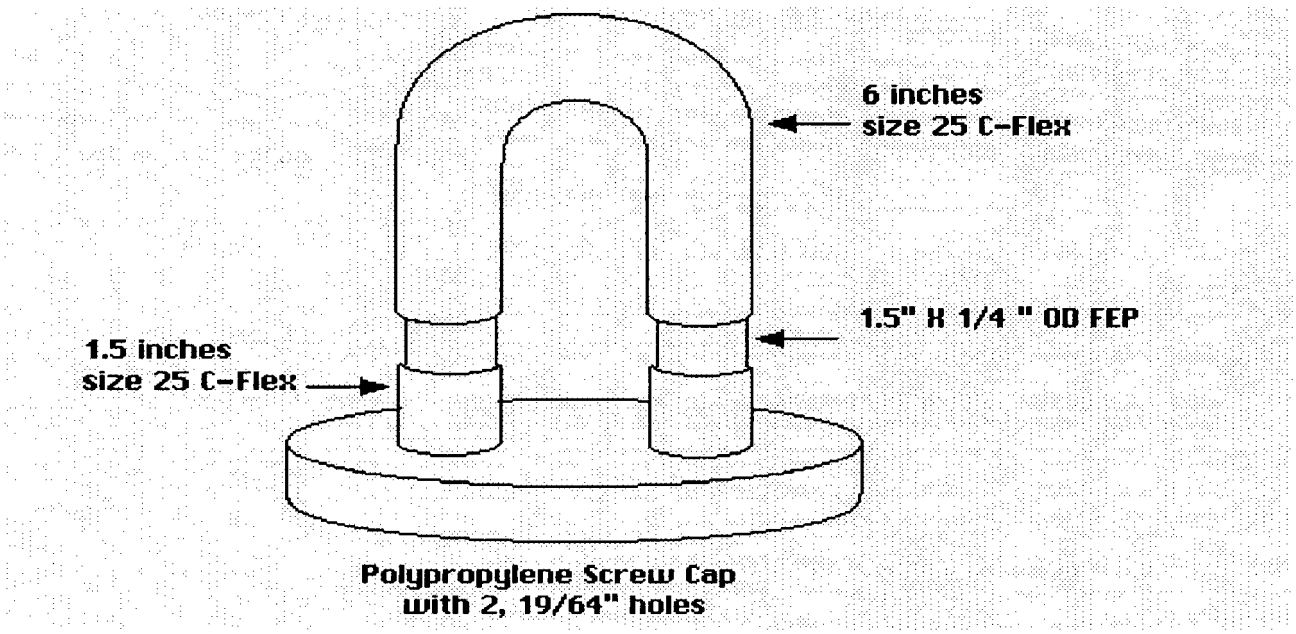

Note: the attachments are formed by first pushing the flex tubing through the hole and the pushing the piece of semi-rigid tubing through the flex. If the hole is the correct diameter (19/64 inches) a very tight seal is formed by compression of the flex tubing.

Figure 2. Detail of sampling wand

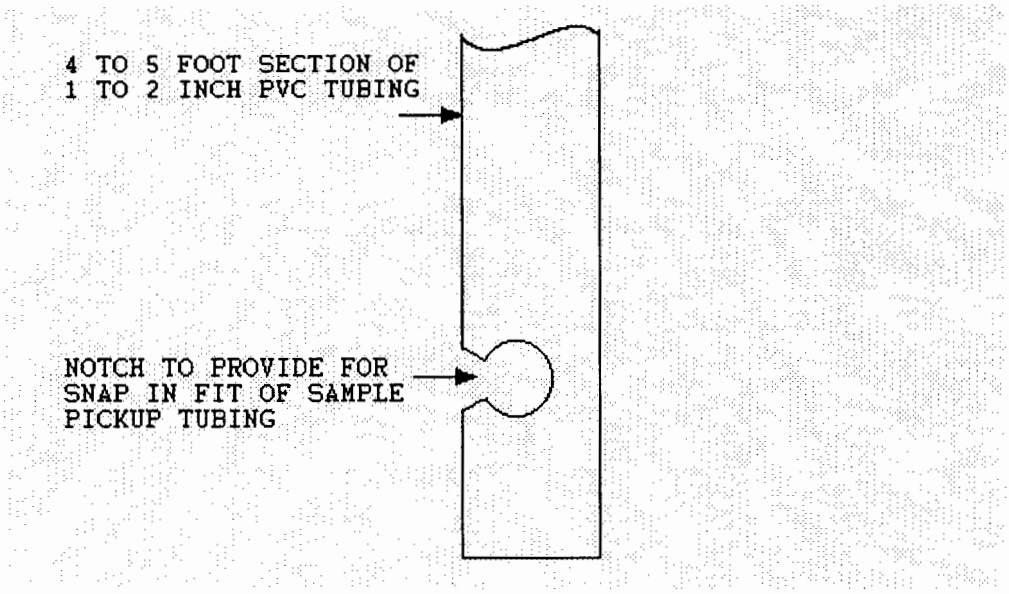

Equipment Cleaning:

Sample containers:

- Fill sample bottles with 5% HNO_3, cap and soak overnight in a water bath at 50° C.
- Remove the bottles from the water bath and rinse with DI water.
- Refill the bottles with 0.5% HNO_3, cap, and soak for 24 hours in a water bath at 50° C.
- Remove the bottles from the water bath and rinse three times with DI water.
- Fill the clean bottles with UP water, cap and place in a ziplock bag.
- After 24 hours, analyze the water from a minimum of 1% of the containers from each batch for target analytes plus the indicator metals sodium, potassium, calcium and magnesium.
- If no metals are detected in the above tests the batch of containers may be marked as clean and stored for distribution.

Sample tubing and connectors:

- Place sample tubing, prepared bottle caps and any other appropriate equipment (small items with can fit inside a wide mouth container) a plastic container filled with 5% HNO_3. Cap container and soaked overnight in a water bath at 50° C.

- Remove the container from the water bath and rinse the contents with DI water.

- Refill the container with 0.5% HNO_3, cap and soak for 24 hours in a water bath at 50° C.

- Remove the container and rinse the contents three times with DI water.

- Allow the equipment to air dry in a class 100 clean air environment.

- Fill a minimum of 1% of the assembled equipment from each batch with UP water and allow to stand overnight. Collect and analyze the water for target analytes plus the indicator metals sodium, potassium, calcium and magnesium.

- If no metals are detected in the above tests the batch of containers may be marked as clean and ready for use.

Packaging:

A grab sample kit is assembled in the laboratory and consists of:

- 2, 1 liter sample bottles filled with UP water and capped with a two port cap (see fig. 1), each sealed individually in a ziplock bag.

- A 5 foot section of 1/4 inch TFE tubing is connected to a 4 foot section of CFLEX 25 tubing. The CFLEX is then connected to a 0.45 µm torturous path capsule filter (Gelman #12175, #12176 or equivalent). This assembly is then sealed in a ziplock bag.

- Finally the bags containing the 2, one liter bottles and the tubing/filter assembly are sealed into a larger ziplock bag to complete one grab sampling kit.

  Note: all equipment is packed in double ziplock bags. Each bottle and the tubing/filter assembly may be double bagged separately if it is more convenient.

- The double bagged kits are packed in a suitable container (we used large coolers) for transport to the sampling location.

Equipment reuse:

The equipment, dated and marked as clean, is prepackaged in the laboratory so that all materials needed to collect one sample are packaged together in double ziplock bags. One package of clean equipment is used to collect one and only one sample.

Generally the clean equipment is disposable and should be discarded after use. However, it may be possible to reuse equipment providing it is properly cleaned, tested, dated and marked. New equipment and used equipment should not be mixed during the cleaning process e.g. batches of new and used equipment should be cleaned and tested separately. We would suggest testing 5% of each batch of used equipment before it is dated and marked as clean.

Note: the filter is not reusable and must be discarded after use.

Sample Analysis:

All sample handling, opening, preparation, digestion, dilution, standards preparation, etc. is performed by an analyst wearing two pairs of clean vinyl gloves in a class 100 clean air environment (e.g. a clean air bench or clean room) using UP water and apparatus verified as clean by proper QA/QC procedures.

The analytical methods we recommend are EPA 200.8, 200.7 and 1638 (EMSLC). The mass spectrometer that we used is equipped with an ultrasonic nebulizer and we strongly recommend its use. We found that it is not necessary to install the mass spectrometer or nebulizer in a clean air environment providing care is used during introduction of the samples for analysis.

SAMPLE COLLECTION PROCEDURES:

The collection of a sample requires at least two persons. One is designated as clean hands and the other as dirty hands.

Field Blank:

We recommend collecting a field blank with every sample. The procedure for a field blank is:

- Clean hands dons a plastic bottle carrier equipped with a neck strap. This is optional but we found that this provides a convenient way to hold and handle the clean bottles during sample collection as it can hold the bottles without completely removing them from their individual bags and minimizes the handling and possible exposure of the equipment to the ambient environment.

- Dirty hands and clean hands each don two pairs of powder free vinyl gloves.

- Dirty hands opens the grab kit's outer plastic bag, clean hands removes the sample bottles and the tubing assembly, still in their bags, and places them in the carrier.

- Clean hands opens one bottle's bag and disconnects one side of the tubing loop that seals the 1 liter bottle

- Clean hands opens the bag containing the tubing and filter assembly and connects the 4' section of Teflon inlet tubing to the bottle using the open end of the sealing loop. There is no reason to remove the bottle from its bag. Note: the bottle is filled with UP water.

- Dirty hands installs the peristaltic tubing into the pump, and starts the pump. The filter is held with the open end up so that any air bubbles will be expelled. The contents of the bottle are pumped to waste (minimum of 1 liter). Note: Clean hands will have to invert the bottle during this step. This step serves two purposes: it provides a clean empty sample bottle and it conditions/cleans the filter.

- Clean hands removes the TFE tubing from the empty bottle and connects the bottle's still loose sealing loop to the capsule filter.

- Clean hands opens the bag containing the second bottle and disconnects one side of the sealing loop, then, connects the bottle to the TFE tubing as before. Note: a clean empty bottle is now connected to the outlet end of the filter and a full bottle of UP water is connected to the inlet.

- Collect a 1 liter field blank by pumping the full bottle into the empty bottle (dirty hands mans the pump). Again the full container will have to be inverted so that it can be pumped empty. Note: this step simply transfers the contents of one bottle to another.

- Clean hands disconnects the sealing tube of the now full bottle from the filter, immediately seals the bottle using the sealing tubing, seals the bottle's ziplock bag and places it back inside the outer bag.

- Dirty hands identifies the blank sample with appropriate tags, labels, etc.

Figure 3. Apparatus assembled to collect a field blank

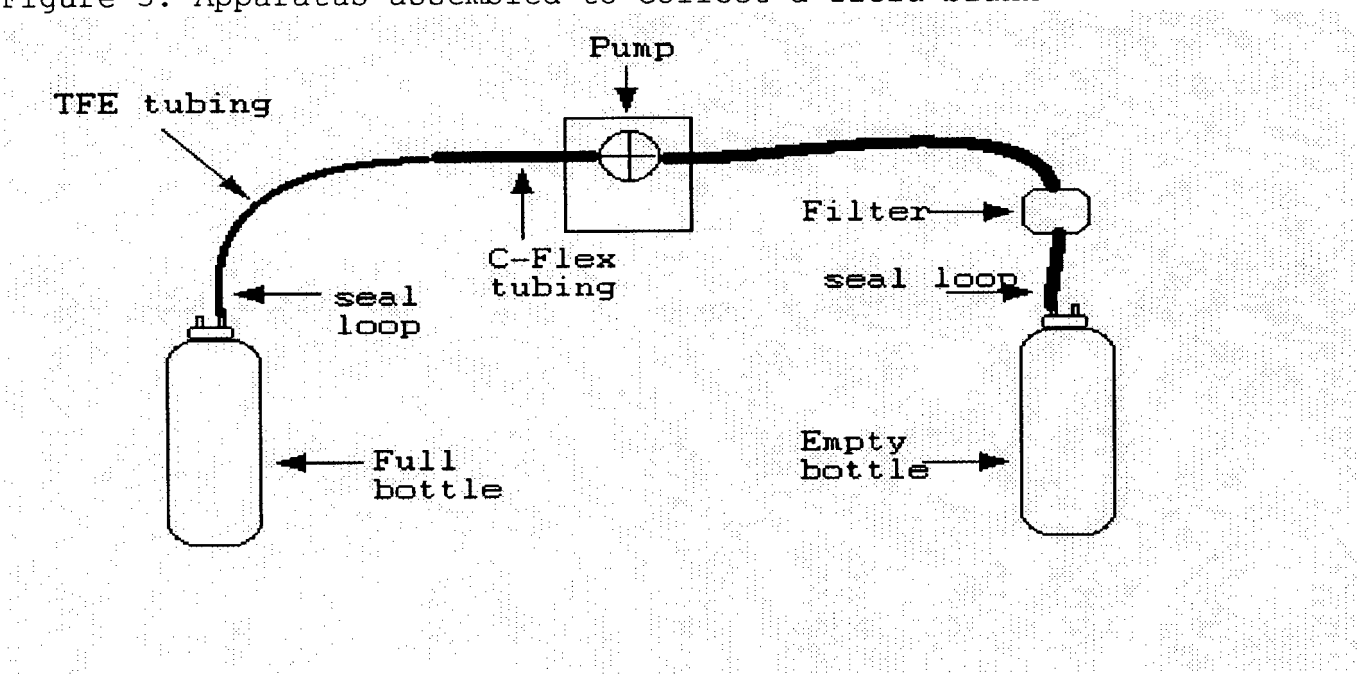

This is a comprehensive field blank because it is collected in the field with the same equipment, under the same conditions and at the same time as the sample and it is processed just like the sample through all steps of the protocol. This is an extremely important check for contamination or failure of the sampling protocol.

Collecting the grab sample:

- Clean hands immediately (immediately means less than one minute) after collection of the blank disconnects the TFE tubing from the empty bottle.

- Clean hands presents the Teflon tubing to dirty hands who holds it several inches from the exposed end and snaps the tubing into the sample wand (see fig. 2) and, using the wand, places the sample pick up tube in the sample collection zone (stream or effluent) as quickly as possible.

  Note: Dirty hands should take care to not contact clean hand's gloves.

  Note: Dirty hands must take extreme care to prevent the exposed end of the sample pickup tubing from coming into contact with himself or other surfaces and any sources of contamination.

- Clean hands pours any entrained blank water out of the capsule filter.

- Dirty hands starts the pump and about 100 ml of sample is pumped through the tubing and filter, as waste. This provides a sample rinse of the equipment and serves to remove any residual

blank water entrained in the tubing or filter. Again, the filter should be held with the open end up to discharge any air bubbles.

- Clean hands then connects the capsule filter to the sample bottle (the bottle just emptied during collection of the blank) and collects one liter of sample. It is not necessary to stop the pump when connecting the free end of the filter to the sample bottle via the sealing loop. Note: The maximum amount of sample passed through the filter should be consistent from sample to sample and should not exceed about 1.1 liters.

- Clean hands disconnects the sealing tubing from the filter and immediately plugs the container using the sealing tubing. Clean hands then seals the bottle's ziplock bag and places it inside the outer bag.

- Dirty hands identifies the sample, seals the outer bag and places the package on ice in a sample cooler for transportation to the laboratory.

- The Filter must be discarded. We recommend that the tubing be discarded but it may be possible to reuse it (see equipment cleaning above).

Figure 4. Apparatus assembled to collect a grab sample

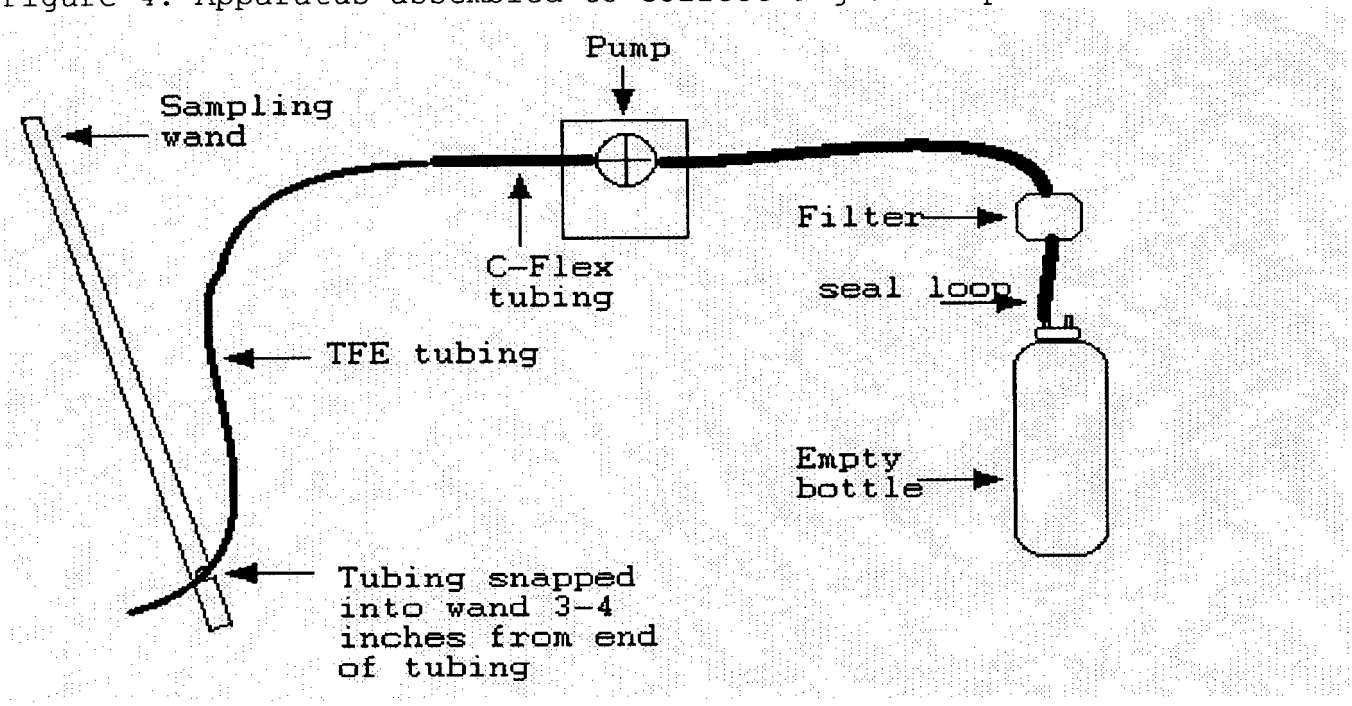

QUALITY CONTROL AND ASSURANCE:

We will not provide detailed QA/QC requirements but will discuss this subject in general. We followed very extensive QA/QC procedures during our demonstration project and tested almost every aspect of the protocol including, the sampling equipment, sampling protocol, field environment, laboratory equipment, and laboratory environment and analytical methods. Not all of this needs to be repeated for each application but most of it should be considered when a laboratory or sampling crew is initially setting up the protocols.

One of the most significant factors to consider during the collection and analysis of samples for analyte concentrations in the single digit ug/l range is avoidance of contamination. We believe that the most valuable QA/QC consideration in this regard is the large number of comprehensive field blanks we have described.

Other significant factors to consider when designing a QA/QC program for specific applications include:

- Routine analysis of the laboratory UP water to ensure that it remains contaminant free.

- Testing a reasonable percentage of each batch of the cleaned equipment to ensure that the cleaning procedures are and remain effective.

- Routine analysis of prepared standards of known concentrations to ensure that the analytical procedures are in control. NIST standard river water samples are available and very helpful.

- An effective QA/QC program should include a requirement to demonstrate the effectiveness and cleanliness of all procedures and equipment (both field and laboratory) used. Any changes in procedure or equipment should be accompanied by a repeat of these QA/QC procedures to demonstrate that the results remain consistent and reliable.

- Proper training including hands on experience for all field and laboratory personnel involved should be a top priority as seemingly minor departures from the prescribed protocols can result in significant contamination of the samples.

Appendix D

Performance of DEQ methods

The protocols and equipment described earlier in this document have been used by DEQ for the past year to collect and analyze stream samples from the Pigg River and effluent samples from the Rocky Mount STP. The following summary data tables illustrate the typical results that can be obtained by application of these laboratory methods and sampling protocols.

Detection Levels:

Method detection levels (MDL) for the analytical methods used were calculated in accordance with 40 CFR part 136, appendix B. They were:

Table 1. Method Detection Levels

material	method	MDL ug/l
silver	200.8	.080
aluminum	200.8	.040
aluminum	200.7	.370
arsenic	200.8	.033
cadmium	200.8	.030
chromium	200.8	.019
copper	200.8	.012
iron	200.7	2.399
mercury	200.8	.121
manganese	200.8	.007
nickel	200.8	.024
lead	200.8	.053
antimony	200.8	.051
selenium	200.8	.128
zinc	200.8	2.286

Blanks:

During the Pigg River study many comprehensive field blanks were collected and analyzed. The results demonstrate that the protocols resulted little or no contamination. The overall blank results were:

Table 2. Blanks.

material	number	mean Conc.	standard deviation
silver	19	.0279	.0572
aluminum	17	-.5588	2.0048
arsenic	22	-.005	.0470
cadmium	21	-.007	.0186
chromium	20	-.002	.0263
copper	23	-.0981	.3380
iron	17	-.5294	1.1946
mercury	16	-.0494	.1006
manganese	25	-.0633	.1946
nickel	21	.0258	.0906
lead	21	.0169	.0253
antimony	20	.0033	.0128
selenium	22	.0782	.6592
zinc	28	-.1207	.7520

Prepared standards

Prepared standards were analyzed at varying concentrations. These consisted of laboratory standards and NIST standard river water samples. The combined results of all these analyses are summarized in table 3.

Table 3. Prepared Standards

concentration ug/l

	0.1	0.2	0.3	0.5	1	2	3	5	50	100
Ag										
n	7	7	7	7	28	7	7	7		
mean	0.083	0.204	0.295	0.498	0.999	2.01	2.96	4.88		
S.D.	0.002	0.006	0.004	0.008	0.029	0.037	0.079	0.086		
Al										
n	7	7	7	7	18	7	7	7	12	
mean	0.104	0.161	0.239	0.614	1.05	1.999	3.067	5.019	50.07	
S.D.	0.006	0.007	0.010	0.026	0.116	0.013	0.084	0.055	2.446	
As										
n	7	7	7	7	40	7	7	7		
mean	0.098	0.215	0.306	0.498	1.003	1.99	3.018	5.068		
S.D.	0.007	0.008	0.010	0.011	0.035	0.039	0.040	0.082		
Cd										
n	7	7	7	7	43	7	7	7		
mean	0.09	0.207	0.306	0.505	0.993	2.038	2.983	5.05		
S.D.	0.003	0.006	0.007	0.009	0.060	0.034	0.053	0.072		
Cr										
n	7	7	7	7	43	7	7	7		
mean	0.096	0.198	0.287	0.486	1.019	1.96	2.921	4.868		
S.D.	0.004	0.004	0.010	0.011	0.046	0.032	0.069	0.090		
Cu										
n	7	7	7	7	44	7	7	7		
mean	0.104	0.178	0.253	0.48	1	1.931	2.922	5.025		
S.D.	0.015	0.010	0.014	0.009	0.056	0.039	0.030	0.044		
Fe										
n					4				14	3
mean					0.995				48.76	101.1
S.D.					0.017				0.919	0.854
Hg										
n				7	21	7				
mean				0.516	0.99	2.048				
S.D.				0.037	0.06	0.080				
Mn										
n	7	7	7	7	42	7	7	7		
mean	0.099	0.208	0.296	0.488	1.01	1.97	2.935	4.926		
S.D.	0.002	0.005	0.006	0.012	0.030	0.040	0.047	0.045		

Ni										
n	7	7	7	7	43	7	7	7		
mean	0.091	0.206	0.299	0.507	1.012	2	2.962	5.055		
S.D.	0.002	0.007	0.012	0.010	0.034	0.051	0.018	0.050		
Pb										
n	7	7	7	7	41	7	7	7		
mean	0.092	0.195	0.299	0.484	1.02	1.989	2.986	5.035		
S.D.	0.004	0.008	0.008	0.004	0.086	0.039	0.029	0.055		
Sb										
n	7	7	7	7	44	7	7	7		
mean	0.099	0.208	0.304	0.503	1.018	1.967	2.934	4.789		
S.D.	0.002	0.004	0.004	0.006	0.004	0.012	0.080	0.089		
Se										
n	7	7	7	7	34	7	7	7		
mean	0.16	0.126	0.228	0.468	0.996	1.875	2.926	5.223		
S.D.	0.055	0.056	0.059	0.064	0.091	0.042	0.068	0.083		
Zn										
n	7	7	7	7	36	7	7	7	11	
mean	0.147	0.126	0.098	0.054	1.001	2.01	2.827	4.957	52.37	
S.D.	0.006	0.056	0.013	0.012	0.152	0.027	0.114	0.057	2.868	

Table 4. 1995 Stream Samples - station 1:

date	al	sb	as	cd	cr	cu	fe
6/13	31	< .05	0.08	< .06	2.11	< .02	
7/29	52	< .05	0.3	< .06	2.07	1.09	179
9/26	13	< .05	0.09	< .06	1.09	0.61	110
10/24	41	< .05	0.06	< .06	0.46	0.32	257
11/30	114	< .05	0.11	< .06	1.65	0.91	288
n	5	N/A	5	N/A	5	4	4
mean	50.2	N/A	0.128	N/A	1.476	0.7325	208.5
S.D.	38.4408	N/A	0.09782	N/A	0.70112	0.33885	80.093
	mn	hg	ni	se	ag	zn	
6/13	37	< .12	0.21	<.77	< .19		
7/29	17.8	< .12	0.36	<.77	< .19	< .26	
9/26	23	< .12	0.92		< .19	0.29	
10/24	23	< .12	0.15	0.03	< .19	0.54	
11/30	20	< .12	0.53	0.1	< .19	0.56	
n	5	N/A	5	2	N/A	3	
mean	24.16	N/A	0.434	0.065	N/A	0.46333	
S.D.	7.50519	N/A	0.30891	0.04949	N/A	0.15044	

Table 5. 1995 Stream samples - station 2:

date	al	sb	as	cd	cr	cu	fe	pb
6/13	24	0.05	0.2	< .06	0.44			< .17
7/29	32.2	0.05	0.43	< .06	0.56	0.79	188	
9/26	12	< .02	0.09	< .06	0.3	0.59	120	< .17
10/24	29	< .02	0.08	< .06	0.18	0.48	315	< .17
11/30	100	< .02	0.15	< .06	0.85	1.33	262	< .17
n	5	2	5	0	5	4	4	0
mean	39.44	0.05	0.19	N/A	0.466	0.7975	221.25	N/A
S.D.	34.714	0	0.1426	N/A	0.2580	0.3774	85.257	N/A
	mn	hg	ni	se	ag	zn		
6/13	34.7	< .12	0.28	< .77	< .19	< 2.18		
7/29	25.8	< .12	0.31	< .77	< .19	< .26		
9/26	28	< .12	0.26		< .19	< .26		
10/24	36	< .12	0.25	0.05	< .19	3.62		
11/30	36	< .12	0.73	0.13	< .19	0.95		
n	5	N/A	5	2	N/A	2		
mean	32.1	N/A	0.366	0.09	N/A	2.285		
S.D.	4.8394	N/A	0.2047	0.0565	N/A	1.8879		

Table 6. 1995 Effluent Samples (3 grab samples @ 8 hour intervals on each sampling day):

No analysis of these data is made here and they are included only to demonstrate that the protocols described will yield results that are suitable for analysis.

date	al	sb	as	cd	cr	cu	fe	pb
6/13	11.9	0.34	0.58	0.14	0.8	5.09	31	0.95
6/13	20.4	0.34	0.2	0.17	0.8	5.86	30	1.32
6/13	9.7	0.37	0.77	0.16	1.62	5.26	38	1.19
7/25	21.55	0.36	0.56	0.21	1.42	6.38	29	0.98
7/25	24.5	0.35	0.61	0.21	1	6.12	28	1
7/25	18	0.31	0.56	0.18	1.64	5.47	26	0.83
9/26	11.2	0.23	0.32	0.14	0.47	6.02	40	0.71
9/26	14.7	0.29	0.42	0.17	0.3	7.77	50	0.79
9/26	12.9	0.28	0.45	0.18	0.69	7.45	40	0.76
10/24	14	0.21	0.29	0.24	0.62	6.48	44	0.37
10/24	15	0.22	0.3	0.22	0.57	7.11	47	0.38
10/24	14	0.21	0.31	0.23	0.81	6.76	52	0.38
11/30	29	0.2	0.35	0.33	0.89	6.2	66	0.35
11/30	28	0.2	0.42	0.34	0.93	6.05	61	0.34
11/30	29	0.2	0.38	0.38	0.62	5.59	57	0.3
n	15	15	15	15	15	15	15	15
mean	18.256	0.274	0.4346	0.22	0.8786	6.2406	42.6	0.71
S.D.	6.7181	0.0666	0.1533	0.0743	0.3985	0.7770	12.704	0.3389

Table 6. cont.

date	mn	hg	ni	se	ag	zn
6/13	4.06	< .12	1.07	< .77	< .19	100
6/13	3.7	< .12	1.13	< .77	0.54	95
6/13	3	< .12	1.18	< .77	< .19	102
7/25	3.28	< .12	1.41	1.2	0.17	104
7/25	3.5	< .12	1.39	0.87	0.13	108
7/25	3.3	< .12	1.16	1	0.12	86
9/26	1.47	< .12	1.21	0.38	0.07	54
9/26	1.46	< .12	1.18	0.83	0.08	59
9/26	2.29	< .12	2.51	0.73	0.07	57
10/24	2.14	< .12	1.25	< .77	< .19	79
10/24	1.54	< .12	1.43	< .77	< .19	78
10/24	0.93	< .12	1.35	< .77	< .19	77
11/30	1.12	< .12	1.26	0.31	0.55	60
11/30	0.71	< .12	1.26	0.26	0.53	56
11/30	0.81	< .12	1.15	0.28	0.39	56
n	15	15	15	15	15	15
mean	2.22066	N/A	1.32933	N/A	N/A	78.0666
S.D.	1.16093	N/A	0.34406	N/A	N/A	20.1085

Quantification:

There are many statistical models that may be used to specify a quantification level. The differences between them may be slight or major depending on the specific nuances one considers in building the statistical model. What all methods have in common is that they seek to establish a method by which one may judge if data are sufficiently accurate to allow them to be used as the basis for a rational and defensible decision.

Even if there were available a model that everyone agreed with (there is currently no such model) it would not eliminate the difficulties associated with establishing a quantification level. The real difficulty with specifying a quantification level is that it is basically not a statistical or technical issue rather it is one of public policy. Once someone decides how much risk can be tolerated for the decision being in error then many methods can be applied to determine if a particular data set is sufficiently accurate to provide the basis for a particular decision.

The express purpose of the data that is to be collected according to the protocols in this guidance is to ascertain if there exists a **reasonable potential for the materials in an effluent to cause or contribute to a violation of the water quality standards** that have been established for the streams in Virginia. Note the key concepts in this statement of purpose are *reasonable potential* and *cause or contribute*.

There is continuing controversy regarding the appropriate specification of a quantification level for use by DEQ. We will not attempt to solve this issue here. Rather, we will simply use the available data and our best judgment describe an appropriate level of quantification.

The following table shows the tolerance intervals for the data resulting from the analysis of standards and prepared materials. Note that the concentrations in these samples are known and the tolerance interval accurately describes the overall results that can be obtained from reagent water prepared standards and NIST standard river water samples.

The table gives the lower and upper bounds of an interval such that based on the sample mean and standard deviation, there is 95% confidence that 99% of the population observations will be within the interval. The interval is defined as: sample mean ± K(standard deviation). K is taken from: W.H.Beyer, *CRC Handbook of Tables for Probability and Statistics*, 2nd. ed., 1983, pages 135-138

Table 7. Tolerance Intervals based on the analysis of standards

	concentration							
	0.1	0.2	0.3	0.5	1.0	2.0	3.0	5.0
ag	.07/.09	.17/.24	.27/.32	.46/.54	.9/1.1	1.8/2.2	2.5/3.4	4.4/5.3
al	.07/.14	.12/.20	.18/.30	.47/.75	.6/1.5	1.9/2.2	2.6/3.5	4.7/5.3
as	.06/.14	.17/.26	.25/.36	.43/.56	.9/1.1	1.8/2.2	2.8/3.2	4.6/5.5
cd	.07/.11	.17/.24	.26/.35	.45/.55	.8/1.2	1.8/2.2	2.7/3.3	4.7/5.4
cr	.07/.12	.17/.22	.23/.34	.43/.54	.9/1.2	1.8/2.1	2.5/2.2	4.4/5.3
cu	.02/.18	.12/.23	.17/.33	.43/.53	.8/1.2	1.7/2.1	2.8/3.1	4.4/5.3
fe					.9/1.1			
hg				.31/.71	.8/1.2	1.6/2.5		
mn	.09/.11	.18/.24	.26/.33	.42/.55	.9/1.1	1.8/2.2	2.7/3.2	4.7/5.2
ni	.08/.10	.16/.25	.23/.37	.45/.56	.9/1.1	1.7/2.3	2.9/3.1	4.8/5.3
pb	.07/.11	.14/.23	.26/.34	.46/.51	.7/1.3	1.8/2.2	2.8/3.1	4.7/5.3
sb	.09/.11	.18/.23	.28/.33	.47/.54	1.0/1.0	1.9/2.0	2.5/3.4	4.3/5.3
se	-.14/.45	-.17/.42	-.1/.54	.12/.81	.7/1.3	1.6/2.1	2.6/3.3	4.8/5.7
zn	.11/.18	-.17/.42	.02/.17	-.01/.12	.5/1.5	1.9/2.2	2.2/3.4	4.6/5.3

The above table demonstrates that the methods recommended herein can yield acceptable results at very low concentrations for most of the metals tested in prepared standards and standard river water.

Based on consistent accuracy and stability at low levels and an interval that contains the population mean to within about ± 10% to 20%, we believe that the data in table 7 adequately demonstrates that the protocols and methods we recommend can provide acceptable quantification of metals at the following concentrations:

Silver	- 0.2 ug/l
Aluminum	- 2.0 ug/l
Arsenic	- 1.0 ug/l
Cadmium	- 0.3 ug/l
Chromium	- 0.5 ug/l
Copper	- 0.5 ug/l
Iron	- 1.0 ug/l
Mercury	- 1.0 ug/l
Manganese	- 0.2 ug/l
Nickel	- 0.5 ug/l
Lead	- 0.5 ug/l
Antimony	- 0.2 ug/l
Selenium	- 2.0 ug/l
Zinc	- 2.0 ug/l

With the exception of silver, lead and cadmium the above numbers are much lower than the water quality standards and even for silver, lead and cadmium concentrations near or at the standards can be acceptably quantified.

It is our belief that the protocols and analytical methods described herein will yield data that will allow DEQ and/or a permittee to determine, with a high degree of confidence, if a reasonable potential exists for the dissolved metals in an effluent to cause a contravention of the water quality standards.

Appendix E

Summary of Quality control Recommendations for Clean Protocols

QUALITY CONTROL RECOMMENDATIONS FOR TRACE METALS SAMPLE COLLECTION

SAMPLING REQUIREMENTS	CRITERIA	FREQUENCY
Type of method	Performances based by demonstration of no detectable contamination of target analytes or interference in samples or blanks. Method 1669 and the sampling apparatus and techniques used by the DEQ are recommended for sample collection.	Demonstration contamination free samples and blanks every time a variation is made to the method
Media Type	Freshwater and treated final effluent wastewater for dissolved and total recoverable metals.	NA
Training	Sample collection by only thoroughly trained personnel. Personnel must demonstrate proficiency in collecting contaminant free blanks and samples.	Train a minimum of one time prior any sample collection. Stop and provide additional training if field QC demonstrates problems until the criteria is achieved.
Filtration	0.45 um Capsule filter with nominal surface area of 600 cm2. Maximum sample volume 1000 mls through single use filter.	On site at time of collection or within one hour for composite samples after the sample sequence is complete.
Sample containers	no detectable target analytes	minimum of 1% of containers checked

	above MDL.	by the laboratory per batch after initial demonstration of acceptable blank QC.
Sampling equipment	no detectable target analytes above MDL.	minimum of 1% of equipment checked by the laboratory per batch after initial demonstration of acceptable blank QC.
Comprehensive grab field blank	blanks must be < 10% sample concentration or if sample is < MDL field blank contamination Os OK.	Process one every sample collected. When duplicate samples are collected only one blank is necessary. Process field blank every time equipment is field cleaned to be reused between sites or sample events.
Comprehensive composite field blank	Blanks must be < 10% sample concentration or is sample is < MDL field blank contamination is OK.	Process one per site for every ten samples. When 10% frequency rule is applied blanks are to be collected with the first sample. Process field blank every time equipment is field cleaned to be reused between sites or sample events.
Field duplicate	Statistically equivalent to the RPD of the matrix spike and matrix spike duplicates for quantifiable concentrations	Process one per site for every ten samples.

Preservation	Samples must be iced in the field. Composite samples must be iced during collection. pH < 2 within 72 hours of collection and samples must remain in original containers for a minimum of 18 hours prior to digestion or analysis.	All samples must be acid preserved in the filed or laboratory with ultra pure HNO3 to pH < 2. Samples should be iced in field immediately after collecting.
Documentation	Sampling activities must be documented on paper or by computerized sample tracking.	Documentation must be done per sample per site.

Appendix F

Additional Methods and Procedures

Quality Assurance Project Plan for Clean Metals, Virginia Department of Environmental Quality, June 1996

This document is available on the world wide web at:
http://www.deq.state.va.us

Copies can be obtained from:
R.E.Stewart
Va. DEQ
629 E. Main St.
Richmond VA 23219

U.S. Geological Survey Protocol for the Collection and Processing of Surface-Water Samples for the Subsequent Determination of Inorganic Constituents in Filtered Water, Open-File Report 94-539

Copies can be obtained from:
U.S. Geological Survey
Earth Science and Information Center
Open File Report Section
Box 25286, MS517
Denver Federal Center
Denver, Colorado 80225

Guidance on Establishing Trace Metal Clean Rooms in Existing Facilities, EPA 821-B-96-???, January 1996. DRAFT.

Copies can be obtained from:
Water Resource Center
Mail Code RC-4100
401 M street, SW
Washington, D.C. 20460

Guidance on the Documentation and Evaluation of Trace Metals Data Collected for Clean Water Act Compliance Monitoring, EPA 821-B-95-???, January 1996, DRAFT

Copies can be obtained from:
US EPA NCEPI
11029 Kenwood Road
Cincinnati, OH 45242

Method 1669: Sampling Ambient Water for Trace Metals at EPA Water Quality Criteria Levels, EPA, 821-R-5-034, April, 1995

Copies can be obtained from:
US EPA NCEPI
11029 Kenwood Road
Cincinnati, OH 45242