02-24-17A10:00 RCVD

Original Service Agreement No. [ ]
Effective Date: [ ]

(PJM Queue #AA1-038)

INTERCONNECTION CONSTRUCTION SERVICE AGREEMENT
Among
PJM INTERCONNECTION, L.L.C.
And
ROCKY FORGE WIND, LLC
And
VIRGINIA ELECTRIC AND POWER COMPANY

Original Service Agreement No. [ ]

INTERCONNECTION CONSTRUCTION SERVICE AGREEMENT
By and Among
PJM Interconnection, L.L.C.
And
Rocky Forge Wind, LLC
And
Virginia Electric and Power Company

(PJM Queue Position #AA1-038)

1.0 Parties. This Interconnection Construction Service Agreement ("CSA") including the Schedules and Appendices attached hereto and incorporated herein, is entered into by and between PJM Interconnection, L.L.C. ("Transmission Provider" or "PJM") and the following Interconnection Customer and Interconnected Transmission Owner:

Interconnection Customer:

Rocky Forge Wind, LLC

Interconnected Transmission Owner:

Virginia Electric and Power Company

All capitalized terms herein shall have the meanings set forth in the appended definitions of such terms as stated in Part I of the Tariff.

2.0 Authority. This CSA is entered into pursuant to Part VI of the Tariff. The standard terms and conditions for construction are attached at Appendix 2 to this CSA and are hereby specifically incorporated as provisions of this agreement. Transmission Provider, the Interconnection Customer and the Interconnected Transmission Owner agree to and assume all of their respective rights and obligations as set forth in the standard terms and conditions for construction in Appendix 2 to this CSA. Further, Interconnection Customer and the Interconnected Transmission Owner each agrees to and assumes all of the rights and obligations of a Constructing Entity with respect to the facilities that each of them is responsible for constructing, as set forth in this CSA.

3.0 Customer Facility. This CSA specifically relates to the following Customer Facility at the following location:

a. Name of Customer Facility:

Rocky Forge Wind Farm

b. Location of Customer Facility:

Approximately 2 miles SE of Daggers Springs, VA

4.0 Effective Date and Term.

4.1 Effective Date. This CSA shall become effective on the later of (i) the date the agreement has been executed by all Construction Parties, or (ii) the date of Interconnection Customer's delivery of Security to the Transmission Provider, provided, however, that if the CSA is filed with the FERC unexecuted, the Effective Date shall be the date specified by the FERC. The Interconnected Transmission Owner shall have no obligation to begin construction of the Transmission Owner Interconnection Facilities prior to the Effective Date. Construction shall commence as provided in the Schedule of Work set forth in Schedule J to this CSA.

4.2 Term. This CSA shall continue in full force and effect from the Effective Date until the termination thereof pursuant to Section 14 of Appendix 2 to this CSA.

4.3 Survival. This CSA shall continue in effect after termination to the extent necessary to provide for final billings and payments, including billings and payments pursuant to Section 9 and/or Section 14 of Appendix 2 to this CSA, and to permit the determination and enforcement of liability and indemnification obligations arising from acts or events that occurred while the CSA was in effect.

5.0 Construction Responsibility for

a. Customer Interconnection Facilities. Interconnection Customer is responsible for designing and constructing the Customer Interconnection Facilities described on the attached Schedule G to this CSA.

b. Construction of Transmission Owner Interconnection Facilities.

1. The Transmission Owner Interconnection Facilities regarding which Interconnected Transmission Owner shall be the Constructing Entity are described on the attached Schedule C to this CSA.

2. Election of Construction Option. Specify below whether the Constructing Entities have mutually agreed to construction of the Transmission Owner Interconnection Facilities that will be built by the Interconnected Transmission Owner pursuant to the Standard Option or the Negotiated Contract Option. (See Section 3.2 of the Appendix 2 to this CSA.)

__X__Standard Option.

_____Negotiated Contract Option.

If the parties have mutually agreed to use the Negotiated Contract Option, the permitted, negotiated terms on which they have agreed and which are not already set forth as part of the Scope of Work and/or Schedule of Work attached to this CSA as Schedules I and J, respectively, shall be as set forth in Schedule H attached to this CSA.

3. Exercise of Option to Build. Has Interconnection Customer timely exercised the Option to Build in accordance with Section 3.2.3 of Appendix 2 to this CSA with respect to some or all of the Transmission Owner Interconnection Facilities?

_____ Yes

___X__ No

If Yes is indicated, Interconnection Customer shall build, in accordance with and subject to the conditions and limitations set forth in Section 3.2.3 of Appendix 2 to this CSA, those portions of the Transmission Owner Interconnection Facilities described on Schedule D attached to this CSA.

6.0 [Reserved].

7.0 Scope of Work. The Scope of Work for all construction pursuant to this CSA shall be as set forth in the attached Schedule I, provided, however, that the scope of work is subject to change in accordance with Transmission Provider's scope change process for interconnection projects as set forth in the PJM Manuals.

8.0 Schedule of Work. The Schedule of Work for all construction pursuant to this CSA shall be as set forth in the attached Schedule J, provided, however, that such schedule is subject to change in accordance with Section 3.3 of Appendix 2 to this CSA.

9.0 [Reserved.]

10.0 Notices. Any notice or request made to or by any party regarding this CSA shall be made in accordance with the standard terms and conditions for construction set forth in Appendix 2 to this CSA to the representatives of the other parties, as indicated below:

Transmission Provider:

PJM Interconnection, L.L.C.
2750 Monroe Blvd.
Audubon, PA 19403

Interconnection Customer:

Rocky Forge Wind, LLC

310 4th St. NE, Suite 200
Charlottesville, VA 22902
Attn: Bill Pezalla, Transmission Manager

Interconnected Transmission Owner:

Virginia Electric and Power Company
P.O. Box 26666
12th Floor One James River Plaza
Richmond, VA 23261-6666
Attn: Mr. Bob McGuire, Director Electric Transmission Project Development & Execution

11.0 Waiver. No waiver by any party of one or more defaults by another in performance of any of the provisions of this CSA shall operate or be construed as a waiver of any other or further default or defaults, whether of a like or different character.

12.0 Amendment. This CSA or any part thereof, may not be amended, modified, assigned, or waived other than by a writing signed by all parties.

13.0 Incorporation of Other Documents. All portions of the Tariff and the Operating Agreement pertinent to the subject of this CSA and not otherwise made a part hereof are hereby incorporated herein and made a part hereof.

14.0 Addendum of Interconnection Customer's Agreement to Conform with IRS Safe Harbor Provisions for Non-Taxable Status. To the extent required, in accordance with Section 2.4.1 of Appendix 2 to this CSA, Schedule L to this CSA shall set forth the Interconnection Customer's agreement to conform with the IRS safe harbor provisions for non-taxable status.

15.0 Addendum of Non-Standard Terms and Conditions for Construction Service. Subject to FERC approval, the parties agree that the terms and conditions set forth in the attached Schedule M are hereby incorporated by reference, and made a part of, this CSA. In the event of any conflict between a provision of Schedule M that FERC has accepted and any provision of the standard terms and conditions set forth in Appendix 2 to this CSA that relates to the same subject matter, the pertinent provision of Schedule M shall control.

16.0 Addendum of Interconnection Requirements for all Wind or Non-synchronous Generation Facilities. To the extent required, Schedule N to this CSA sets forth interconnection requirements for all wind and non-synchronous generation facilities and is hereby incorporated by reference and made a part of this CSA.

17.0 Infrastructure security of electric system equipment and operations and control hardware and software is essential to ensure day-to-day reliability and operational security. All Transmission Providers, Interconnected Transmission Owners, market participants, and Interconnection Customers interconnected with electric systems are to comply with the

recommendations offered by the President's Critical Infrastructure Protection Board and best practice recommendations from the electric reliability authority. All public utilities are expected to meet basic standards for electric system infrastructure and operational security, including physical, operational, and cyber-security practices.

IN WITNESS WHEREOF, Transmission Provider, Interconnection Customer and Interconnected Transmission Owner have caused this ISA to be executed by their respective authorized officials.

(PJM Queue Position # AA1-038)

Transmission Provider: PJM Interconnection, L.L.C.

By: _____ Manager, Interconnection Projects 3/16/17

Name Title Date

Printed name of signer: David M. Egan

Interconnection Customer: Rocky Forge Wind, LLC

By: _____ President, Apex Clean Energy Holdings, LLC, Sole Member of Apex GCL, LLC, Sole Member of Apex Wind III, Sole Member of Rocky Forge Wind, LLC — CEO — 2/22/17

Name Title Date

Printed name of signer: Mark Goodwin

Interconnected Transmission Owner: Virginia Electric and Power Company

By: _____ Director, Electric Transmission Project Development and Execution — 3/10/2017

Name Title Date

Printed name of signer: Bob McGuire

APPENDICES:

- **APPENDIX 1 - DEFINITIONS**
- **APPENDIX 2 - STANDARD CONSTRUCTION TERMS AND CONDITIONS**

SCHEDULES:

- **SCHEDULE A - SITE PLAN**
- **SCHEDULE B - SINGLE-LINE DIAGRAM OF INTERCONNECTION FACILITIES**
- **SCHEDULE C - TRANSMISSION OWNER INTERCONNECTION FACILITIES TO BE BUILT BY INTERCONNECTED TRANSMISSION OWNER**
- **SCHEDULE D - TRANSMISSION OWNER INTERCONNECTION FACILITIES TO BE BUILT BY INTERCONNECTION CUSTOMER PURSUANT TO OPTION TO BUILD**
- **SCHEDULE E – [Reserved]**
- **SCHEDULE F – [Reserved]**
- **SCHEDULE G - CUSTOMER INTERCONNECTION FACILITIES**
- **SCHEDULE H - NEGOTIATED CONTRACT OPTION TERMS**
- **SCHEDULE I - SCOPE OF WORK**
- **SCHEDULE J - SCHEDULE OF WORK**
- **SCHEDULE K - APPLICABLE TECHNICAL REQUIREMENTS AND STANDARDS**
- **SCHEDULE L - INTERCONNECTION CUSTOMER'S AGREEMENT TO CONFORM WITH IRS SAFE HARBOR PROVISIONS FOR NON-TAXABLE STATUS**
- **SCHEDULE M - SCHEDULE OF NON-STANDARD TERMS AND CONDITIONS**
- **SCHEDULE N - INTERCONNECTION REQUIREMENTS FOR A WIND GENERATION FACILITY**

APPENDIX 1

DEFINITIONS

From the PJM Tariff accepted for filing by the Commission
As of the effective date of this CSA

1. Definitions

Abnormal Condition:

"Abnormal Condition" shall mean any condition on the Interconnection Facilities which, determined in accordance with Good Utility Practice, is: (i) outside normal operating parameters such that facilities are operating outside their normal ratings or that reasonable operating limits have been exceeded; and (ii) could reasonably be expected to materially and adversely affect the safe and reliable operation of the Interconnection Facilities; but which, in any case, could reasonably be expected to result in an Emergency Condition. Any condition or situation that results from lack of sufficient generating capacity to meet load requirements or that results solely from economic conditions shall not, standing alone, constitute an Abnormal Condition.

Acceleration Request:

"Acceleration Request" shall mean a request pursuant to Operating Agreement, Schedule 1, section 1.9.4A, and the parallel provisions of Tariff, Attachment K-Appendix, to accelerate or reschedule a transmission outage scheduled pursuant to Operating Agreement, Schedule 1, sections 1.9.2 or 1.9.4, and the parallel provisions of Tariff, Attachment K-Appendix.

Additional Day-ahead Scheduling Reserves Requirement:

"Additional Day-ahead Scheduling Reserves Requirement" shall mean the portion of the Day-ahead Scheduling Reserves Requirement that is required in addition to the Base Day-ahead Scheduling Reserves Requirement to ensure adequate resources are procured to meet real-time load and operational needs, as specified in the PJM Manuals.

Affected System:

"Affected System" shall mean an electric system other than the Transmission Provider's Transmission System that may be affected by a proposed interconnection or on which a proposed interconnection or addition of facilities or upgrades may require modifications or upgrades to the Transmission System.

Affected System Operator:

"Affected System Operator" shall mean an entity that operates an Affected System or, if the Affected System is under the operational control of an independent system operator or a regional transmission organization, such independent entity.

Affiliate:

"Affiliate" shall mean any two or more entities, one of which controls the other or that are under common control. "Control" shall mean the possession, directly or indirectly, of the power to direct the management or policies of an entity. Ownership of publicly-traded equity securities of another entity shall not result in control or affiliation for purposes of the Tariff or Operating Agreement if the securities are held as an investment, the holder owns (in its name or via

intermediaries) less than 10 percent of the outstanding securities of the entity, the holder does not have representation on the entity's board of directors (or equivalent managing entity) or vice versa, and the holder does not in fact exercise influence over day-to-day management decisions. Unless the contrary is demonstrated to the satisfaction of the Members Committee, control shall be presumed to arise from the ownership of or the power to vote, directly or indirectly, ten percent or more of the voting securities of such entity.

Agreements:

"Agreements" shall mean the Operating Agreement of PJM Interconnection, L.L.C., the PJM Open Access Transmission Tariff, the Reliability Assurance Agreement, and/or other agreements between PJM Interconnection, L.L.C. and its Members.

Ancillary Services:

"Ancillary Services" shall mean those services that are necessary to support the transmission of capacity and energy from resources to loads while maintaining reliable operation of the Transmission Provider's Transmission System in accordance with Good Utility Practice.

Annual Demand Resource:

"Annual Demand Resource" shall have the meaning specified in the Reliability Assurance Agreement.

Annual Energy Efficiency Resource:

"Annual Energy Efficiency Resource" shall have the meaning specified in the Reliability Assurance Agreement.

Annual Resource:

"Annual Resource" shall mean a Generation Capacity Resource, an Annual Energy Efficiency Resource or an Annual Demand Resource.

Annual Resource Price Adder:

"Annual Resource Price Adder" shall mean, for Delivery Years starting June 1, 2014 and ending May 31, 2017, an addition to the marginal value of Unforced Capacity and the Extended Summer Resource Price Adder as necessary to reflect the price of Annual Resources required to meet the applicable Minimum Annual Resource Requirement.

Annual Revenue Rate:

"Annual Revenue Rate" shall mean the rate employed to assess a compliance penalty charge on a Curtailment Service Provider under Tariff, Attachment DD, section 11.

Annual Transmission Costs:

"Annual Transmission Costs" shall mean the total annual cost of the Transmission System for purposes of Network Integration Transmission Service shall be the amount specified in Attachment H for each Zone until amended by the applicable Transmission Owner or modified by the Commission.

Applicable Laws and Regulations:

"Applicable Laws and Regulations" shall mean all duly promulgated applicable federal, State and local laws, regulations, rules, ordinances, codes, decrees, judgments, directives, or judicial or administrative orders, permits and other duly authorized actions of any Governmental Authority having jurisdiction over the relevant parties, their respective facilities, and/or the respective services they provide.

Applicable Regional Entity:

"Applicable Regional Entity" shall mean the Regional Entity for the region in which a Network Customer, Transmission Customer, New Service Customer, or Transmission Owner operates.

Applicable Standards:

"Applicable Standards" shall mean the requirements and guidelines of NERC, the Applicable Regional Entity, and the Control Area in which the Customer Facility is electrically located; the PJM Manuals; and Applicable Technical Requirements and Standards.

Applicable Technical Requirements and Standards:

"Applicable Technical Requirements and Standards" shall mean those certain technical requirements and standards applicable to interconnections of generation and/or transmission facilities with the facilities of an Interconnected Transmission Owner or, as the case may be and to the extent applicable, of an Electric Distributor, as published by Transmission Provider in a PJM Manual provided, however, that, with respect to any generation facilities with maximum generating capacity of 2 MW or less *(synchronous) or 5 MW or less (inverter-based)* for which the Interconnection Customer executes a Construction Service Agreement or Interconnection Service Agreement on or after March 19, 2005, "Applicable Technical Requirements and Standards" shall refer to the "PJM Small Generator Interconnection Applicable Technical Requirements and Standards." All Applicable Technical Requirements and Standards shall be publicly available through postings on Transmission Provider's internet website.

Applicant:

"Applicant" shall mean an entity desiring to become a PJM Member, or to take Transmission Service that has submitted the PJMSettlement Credit Application, PJMSettlement Credit Agreement and other required submittals as set forth in Tariff, Attachment Q.

Application:

"Application" shall mean a request by an Eligible Customer for transmission service pursuant to the provisions of the Tariff.

Attachment Facilities:

"Attachment Facilities" shall mean the facilities necessary to physically connect a Customer Facility to the Transmission System or interconnected distribution facilities.

Attachment H:

"Attachment H" shall refer collectively to the Attachments to the PJM Tariff with the prefix "H-" that set forth, among other things, the Annual Transmission Rates for Network Integration Transmission Service in the PJM Zones.

Auction Revenue Rights:

"Auction Revenue Rights" or "ARRs" shall mean the right to receive the revenue from the Financial Transmission Right auction, as further described in Operating Agreement, Schedule 1, section 7.4, and the parallel provisions of Tariff, Attachment K-Appendix.

Auction Revenue Rights Credits:

"Auction Revenue Rights Credits" shall mean the allocated share of total FTR auction revenues or costs credited to each holder of Auction Revenue Rights, calculated and allocated as specified in Operating Agreement, Schedule 1, section 7.4.3, and the parallel provisions of Tariff, Attachment K-Appendix.

Authorized Government Agency:

"Authorized Government Agency" means a regulatory body or government agency, with jurisdiction over PJM, the PJM Market, or any entity doing business in the PJM Market, including, but not limited to, the Commission, State Commissions, and state and federal attorneys general.

Avoidable Cost Rate:

"Avoidable Cost Rate" shall mean a component of the Market Seller Offer Cap calculated in accordance with Tariff, Attachment DD, section 6.

Balancing Ratio:

"Balancing Ratio" shall have the meaning provided in Tariff, Attachment DD, section 10A.

Base Capacity Demand Resource:

"Base Capacity Demand Resource" shall have the meaning specified in the Reliability Assurance Agreement.

Base Capacity Demand Resource Constraint:

"Base Capacity Demand Resource Constraint" for the PJM Region or an LDA, shall mean, for the 2018/2019 and 2019/2020 Delivery Years, the maximum Unforced Capacity amount, determined by PJM, of Base Capacity Demand Resources and Base Capacity Energy Efficiency Resources that is consistent with the maintenance of reliability. As more fully set forth in the PJM Manuals, PJM calculates the Base Capacity Demand Resource Constraint for the PJM Region or an LDA, by first determining a reference annual loss of load expectation ("LOLE") assuming no Base Capacity Resources, including no Base Capacity Demand Resources or Base Capacity Energy Efficiency Resources. The calculation for the PJM Region uses a daily distribution of loads under a range of weather scenarios (based on the most recent load forecast and iteratively shifting the load distributions to result in the Installed Reserve Margin established for the Delivery Year in question) and a weekly capacity distribution (based on the cumulative capacity availability distributions developed for the Installed Reserve Margin study for the Delivery Year in question). The calculation for each relevant LDA uses a daily distribution of loads under a range of weather scenarios (based on the most recent load forecast for the Delivery Year in question) and a weekly capacity distribution (based on the cumulative capacity availability distributions developed for the Installed Reserve Margin study for the Delivery Year in question). For the relevant LDA calculation, the weekly capacity distributions are adjusted to reflect the Capacity Emergency Transfer Limit for the Delivery Year in question.

For both the PJM Region and LDA analyses, PJM then models the commitment of varying amounts of Base Capacity Demand Resources and Base Capacity Energy Efficiency Resources (displacing otherwise committed generation) as interruptible from June 1 through September 30 and unavailable the rest of the Delivery Year in question and calculates the LOLE at each DR and EE level. The Base Capacity Demand Resource Constraint is the combined amount of Base Capacity Demand Resources and Base Capacity Energy Efficiency Resources, stated as a percentage of the unrestricted annual peak load, that produces no more than a five percent increase in the LOLE, compared to the reference value. The Base Capacity Demand Resource Constraint shall be expressed as a percentage of the forecasted peak load of the PJM Region or such LDA and is converted to Unforced Capacity by multiplying [the reliability target percentage] times [the Forecast Pool Requirement] times [the forecasted peak load of the PJM Region or such LDA, reduced by the amount of load served under the FRR Alternative].

Base Capacity Demand Resource Price Decrement:

"Base Capacity Demand Resource Price Decrement" shall mean, for the 2018/2019 and 2019/2020 Delivery Years, a difference between the clearing price for Base Capacity Demand Resources and Base Capacity Energy Efficiency Resources and the clearing price for Base Capacity Resources and Capacity Performance Resources, representing the cost to procure additional Base Capacity Resources or Capacity Performance Resources out of merit order when the Base Capacity Demand Resource Constraint is binding.

Base Capacity Energy Efficiency Resource:

"Base Capacity Energy Efficiency Resource" shall have the meaning specified in the Reliability Assurance Agreement.

Base Capacity Resource:

"Base Capacity Resource" shall mean a Capacity Resource as described in Tariff, Attachment DD, section 5.5A(b).

Base Capacity Resource Constraint:

"Base Capacity Resource Reliability Constraint" for the PJM Region or an LDA, shall mean, for the 2018/2019 and 2019/2020 Delivery Years, the maximum Unforced Capacity amount, determined by PJM, of Base Capacity Resources, including Base Capacity Demand Resources and Base Capacity Energy Efficiency Resources, that is consistent with the maintenance of reliability. As more fully set forth in the PJM Manuals, PJM calculates the above Base Capacity Resource Constraint for the PJM Region or an LDA, by first determining a reference annual loss of load expectation ("LOLE") assuming no Base Capacity Resources, including no Base Capacity Demand Resources or Base Capacity Energy Efficiency Resources. The calculation for the PJM Region uses the weekly load distribution from the Installed Reserve Margin study for the Delivery Year in question (based on the most recent load forecast and iteratively shifting the load distributions to result in the Installed Reserve Margin established for the Delivery Year in question) and a weekly capacity distribution (based on the cumulative capacity availability distributions developed for the Installed Reserve Margin study for the Delivery Year in question). The calculation for each relevant LDA uses a weekly load distribution (based on the Installed Reserve Margin study and the most recent load forecast for the Delivery Year in question) and a weekly capacity distribution (based on the cumulative capacity availability distributions developed for the Installed Reserve Margin study for the Delivery Year in question). For the relevant LDA calculation, the weekly capacity distributions are adjusted to reflect the Capacity Emergency Transfer Limit for the Delivery Year in question. Additionally, for the PJM Region and relevant LDA calculation, the weekly capacity distributions are adjusted to reflect winter ratings.

For both the PJM Region and LDA analyses, PJM models the commitment of an amount of Base Capacity Demand Resources and Base Capacity Energy Efficiency Resources equal to the Base Capacity Demand Resource Constraint (displacing otherwise committed generation). PJM then models the commitment of varying amounts of Base Capacity Resources (displacing otherwise committed generation) as unavailable during the peak week of winter and available the rest of the Delivery Year in question and calculates the LOLE at each Base Capacity Resource level. The Base Capacity Resource Constraint is the combined amount of Base Capacity Demand Resources, Base Capacity Energy Efficiency Resources and Base Capacity Resources, stated as a percentage of the unrestricted annual peak load, that produces no more than a ten percent increase in the LOLE, compared to the reference value. The Base Capacity Resource Constraint shall be expressed as a percentage of the forecasted peak load of the PJM Region or such LDA

and is converted to Unforced Capacity by multiplying [the reliability target percentage] times [one minus the pool-wide average EFORd] times [the forecasted peak load of the PJM Region or such LDA, reduced by the amount of load served under the FRR Alternative].
"Base Capacity Resource Price Decrement" shall mean, for the 2018/2019 and 2019/2020 Delivery Years, a difference between the clearing price for Base Capacity Resources and the clearing price for Capacity Performance Resources, representing the cost to procure additional Capacity Performance Resources out of merit order when the Base Capacity Resource Constraint is binding.

Base Capacity Resource Price Decrement:

"Base Capacity Resource Price Decrement" shall mean, for the 2018/2019 and 2019/2020 Delivery Years, a difference between the clearing price for Base Capacity Resources and the clearing price for Capacity Performance Resources, representing the cost to procure additional Capacity Performance Resources out of merit order when the Base Capacity Resource Constraint is binding.

Base Day-ahead Scheduling Reserves Requirement:

"Base Day-ahead Scheduling Reserves Requirement" shall mean the thirty-minute reserve requirement for the PJM Region established consistent with the Applicable Standards, plus any additional thirty-minute reserves scheduled in response to an RTO-wide Hot or Cold Weather Alert or other reasons for conservative operations.

Base Load Generation Resource

"Base Load Generation Resource" shall mean a Generation Capacity Resource that operates at least 90 percent of the hours that it is available to operate, as determined by the Office of the Interconnection in accordance with the PJM Manuals.

Base Offer Segment:

"Base Offer Segment" shall mean a component of a Sell Offer based on an existing Generation Capacity Resource, equal to the Unforced Capacity of such resource, as determined in accordance with the PJM Manuals. If the Sell Offers of multiple Market Sellers are based on a single Existing Generation Capacity Resource, the Base Offer Segments of such Market Sellers shall be determined pro rata based on their entitlements to Unforced Capacity from such resource.

Base Residual Auction:

"Base Residual Auction" shall mean the auction conducted three years prior to the start of the Delivery Year to secure commitments from Capacity Resources as necessary to satisfy any portion of the Unforced Capacity Obligation of the PJM Region not satisfied through Self-Supply.

Batch Load Demand Resource:

"Batch Load Demand Resource" shall mean a Demand Resource that has a cyclical production process such that at most times during the process it is consuming energy, but at consistent regular intervals, ordinarily for periods of less than ten minutes, it reduces its consumption of energy for its production processes to minimal or zero megawatts.

Behind The Meter Generation:

"Behind The Meter Generation" shall refer to a generation unit that delivers energy to load without using the Transmission System or any distribution facilities (unless the entity that owns or leases the distribution facilities has consented to such use of the distribution facilities and such consent has been demonstrated to the satisfaction of the Office of the Interconnection); provided, however, that Behind The Meter Generation does not include (i) at any time, any portion of such generating unit's capacity that is designated as a Generation Capacity Resource; or (ii) in an hour, any portion of the output of such generating unit[s] that is sold to another entity for consumption at another electrical location or into the PJM Interchange Energy Market.

Black Start Service:

"Black Start Service" shall mean the capability of generating units to start without an outside electrical supply or the demonstrated ability of a generating unit with a high operating factor (subject to Transmission Provider concurrence) to automatically remain operating at reduced levels when disconnected from the grid.

Breach:

"Breach" shall mean the failure of a party to perform or observe any material term or condition of Tariff, Part IV or Part VI, or any agreement entered into thereunder as described in the relevant provisions of such agreement.

Breaching Party:

"Breaching Party" shall mean a party that is in Breach of Tariff, Part IV or Part VI and/or an agreement entered into thereunder.

Business Day:

"Business Day" shall mean a day in which the Federal Reserve System is open for business and is not a scheduled PJM holiday.

Buy Bid:

"Buy Bid" shall mean a bid to buy Capacity Resources in any Incremental Auction.

Canadian Guaranty:

"Canadian Guaranty" shall mean a Corporate Guaranty provided by an Affiliate of a Participant that is domiciled in Canada, and meets all of the provisions of Tariff, Attachment Q.

Cancellation Costs:

"Cancellation Costs" shall mean costs and liabilities incurred in connection with: (a) cancellation of supplier and contractor written orders and agreements entered into to design, construct and install Attachment Facilities, Direct Assignment Facilities and/or Customer-Funded Upgrades, and/or (b) completion of some or all of the required Attachment Facilities, Direct Assignment Facilities and/or Customer-Funded Upgrades, or specific unfinished portions and/or removal of any or all of such facilities which have been installed, to the extent required for the Transmission Provider and/or Transmission Owner(s) to perform their respective obligations under Tariff, Part IV and/or Part VI.

Capacity:

"Capacity" shall mean the installed capacity requirement of the Reliability Assurance Agreement or similar such requirements as may be established.

Capacity Credit:

"Capacity Credit" shall have the meaning specified in Operating Agreement, Schedule 11, including Capacity Credits obtained prior to the termination of such Schedule applicable to periods after the termination of such Schedule.

Capacity Emergency Transfer Limit:

"Capacity Emergency Transfer Limit" or "CETL" shall have the meaning provided in the Reliability Assurance Agreement.

Capacity Emergency Transfer Objective:

"Capacity Emergency Transfer Objective" or "CETO" shall have the meaning provided in the Reliability Assurance Agreement.

Capacity Export Transmission Customer:

"Capacity Export Transmission Customer" shall mean a customer taking point to point transmission service under Tariff, Part II to export capacity from a generation resource located in the PJM Region that has qualified for an exception to the RPM must-offer requirement as described in Tariff, Attachment DD, section 6.6(g).

Capacity Import Limit:

"Capacity Import Limit" shall have the meaning provided in the Reliability Assurance

Agreement.

Capacity Interconnection Rights:

"Capacity Interconnection Rights" shall mean the rights to input generation as a Generation Capacity Resource into the Transmission System at the Point of Interconnection where the generating facilities connect to the Transmission System.

Capacity Market Buyer:

"Capacity Market Buyer" shall mean a Member that submits bids to buy Capacity Resources in any Incremental Auction.

Capacity Market Seller:

"Capacity Market Seller" shall mean a Member that owns, or has the contractual authority to control the output or load reduction capability of, a Capacity Resource, that has not transferred such authority to another entity, and that offers such resource in the Base Residual Auction or an Incremental Auction.

Capacity Performance Resource:

"Capacity Performance Resource" shall mean a Capacity Resource as described in Tariff, Attachment DD, section 5.5A(a).

Capacity Performance Transition Incremental Auction:

"Capacity Performance Transition Incremental Auction" shall have the meaning specified in Tariff, Attachment DD, section 5.14D.

Capacity Resource:

"Capacity Resource" shall have the meaning provided in the Reliability Assurance Agreement.

Capacity Resource Clearing Price:

"Capacity Resource Clearing Price" shall mean the price calculated for a Capacity Resource that offered and cleared in a Base Residual Auction or Incremental Auction, in accordance with Tariff, Attachment DD, section 5.

Capacity Storage Resource:

"Capacity Storage Resource" shall mean any hydroelectric power plant, flywheel, battery storage, or other such facility solely used for short term storage and injection of energy at a later time to participate in the PJM energy and/or Ancillary Services markets and which participates in the Reliability Pricing Model.

Capacity Transfer Right:

"Capacity Transfer Right" shall mean a right, allocated to LSEs serving load in a Locational Deliverability Area, to receive payments, based on the transmission import capability into such Locational Deliverability Area, that offset, in whole or in part, the charges attributable to the Locational Price Adder, if any, included in the Zonal Capacity Price calculated for a Locational Delivery Area.

Capacity Transmission Injection Rights:

"Capacity Transmission Injection Rights" shall mean the rights to schedule energy and capacity deliveries at a Point of Interconnection of a Merchant Transmission Facility with the Transmission System. Capacity Transmission Injection Rights may be awarded only to a Merchant D.C. Transmission Facility and/or Controllable A.C. Merchant Transmission Facilities that connects the Transmission System to another control area. Deliveries scheduled using Capacity Transmission Injection Rights have rights similar to those under Firm Point-to-Point Transmission Service or, if coupled with a generating unit external to the PJM Region that satisfies all applicable criteria specified in the PJM Manuals, similar to Capacity Interconnection Rights.

Cold Weather Alert:

"Cold Weather Alert" shall mean the notice that PJM provides to PJM Members, Transmission Owners, resource owners and operators, customers, and regulators to prepare personnel and facilities for expected extreme cold weather conditions.

Collateral Call:

"Collateral Call" shall mean a notice to a Participant that additional Financial Security, or possibly early payment, is required in order to remain in, or to regain, compliance with this policy.

Commencement Date:

"Commencement Date" shall mean the date on which Interconnection Service commences in accordance with an Interconnection Service Agreement.

Commission:

"Commission" shall mean the Federal Energy Regulatory Commission or FERC.

Completed Application:

"Completed Application" shall mean an application that satisfies all of the information and other requirements of the Tariff, including any required deposit.

Compliance Aggregation Area (CAA):

"Compliance Aggregation Area" or "CAA" shall mean a geographic area of Zones or sub-Zones that are electrically-contiguous and experience for the relevant Delivery Year, based on Resource Clearing Prices of, for Delivery Years through May 31, 2018, Annual Resources and for the 2018/2019 Delivery Year and subsequent Delivery Years, Capacity Performance Resources, the same locational price separation in the Base Residual Auction, the same locational price separation in the First Incremental Auction, the same locational price separation in the Second Incremental Auction, or the same locational price separation in the Third Incremental Auction.

Conditional Incremental Auction:

"Conditional Incremental Auction" shall mean an Incremental Auction conducted for a Delivery Year if and when necessary to secure commitments of additional capacity to address reliability criteria violations arising from the delay in a Backbone Transmission upgrade that was modeled in the Base Residual Auction for such Delivery Year.

CONE Area:

"CONE Area" shall mean the areas listed in Tariff, Attachment DD, section 5.10(a)(iv)(A) and any LDAs established as CONE Areas pursuant to Tariff, Attachment DD, section 5.10(a)(iv)(B).

Confidential Information:

"Confidential Information" shall mean any confidential, proprietary, or trade secret information of a plan, specification, pattern, procedure, design, device, list, concept, policy, or compilation relating to the present or planned business of a New Service Customer, Transmission Owner, or other Interconnection Party or Construction Party, which is designated as confidential by the party supplying the information, whether conveyed verbally, electronically, in writing, through inspection, or otherwise, and shall include, without limitation, all information relating to the producing party's technology, research and development, business affairs and pricing, and any information supplied by any New Service Customer, Transmission Owner, or other Interconnection Party or Construction Party to another such party prior to the execution of an Interconnection Service Agreement or a Construction Service Agreement.

Congestion Price:

"Congestion Price" shall mean the congestion component of the Locational Marginal Price, which is the effect on transmission congestion costs (whether positive or negative) associated with increasing the output of a generation resource or decreasing the consumption by a Demand Resource, based on the effect of increased generation from or consumption by the resource on transmission line loadings, calculated as specified in Operating Agreement, Schedule 1, section 2, and the parallel provisions of Tariff, Attachment K-Appendix.

Consolidated Transmission Owners Agreement:

"Consolidated Transmission Owners Agreement" shall mean the certain Consolidated Transmission Owners Agreement dated as of December 15, 2005, by and among the Transmission Owners and by and between the Transmission Owners and PJM Interconnection, L.L.C.

Constructing Entity:

"Constructing Entity" shall mean either the Transmission Owner or the New Services Customer, depending on which entity has the construction responsibility pursuant to Tariff, Part VI and the applicable Construction Service Agreement; this term shall also be used to refer to an Interconnection Customer with respect to the construction of the Customer Interconnection Facilities.

Construction Party:

"Construction Party" shall mean a party to a Construction Service Agreement. "Construction Parties" shall mean all of the Parties to a Construction Service Agreement.

Construction Service Agreement:

"Construction Service Agreement" shall mean either an Interconnection Construction Service Agreement or an Upgrade Construction Service Agreement.

Control Area:

"Control Area" shall mean an electric power system or combination of electric power systems to which a common automatic generation control scheme is applied in order to:

(1) match, at all times, the power output of the generators within the electric power system(s) and capacity and energy purchased from entities outside the electric power system(s), with the load within the electric power system(s);

(2) maintain scheduled interchange with other Control Areas, within the limits of Good Utility Practice;

(3) maintain the frequency of the electric power system(s) within reasonable limits in accordance with Good Utility Practice; and

(4) provide sufficient generating capacity to maintain operating reserves in accordance with Good Utility Practice.

Control Zone:

"Control Zone" shall have the meaning given in the Operating Agreement.

Controllable A.C. Merchant Transmission Facilities:

"Controllable A.C. Merchant Transmission Facilities" shall mean transmission facilities that (1) employ technology which Transmission Provider reviews and verifies will permit control of the amount and/or direction of power flow on such facilities to such extent as to effectively enable the controllable facilities to be operated as if they were direct current transmission facilities, and (2) that are interconnected with the Transmission System pursuant to Tariff, Part IV and Part VI.

Coordinated External Transaction:

"Coordinated External Transaction" shall mean a transaction to simultaneously purchase and sell energy on either side of a CTS Enabled Interface in accordance with the procedures of Operating Agreement, Schedule 1, section 1.13, and the parallel provisions of Tariff, Attachment K-Appendix.

Coordinated Transaction Scheduling:

"Coordinated Transaction Scheduling" or "CTS" shall mean the scheduling of Coordinated External Transactions at a CTS Enabled Interface in accordance with the procedures of Operating Agreement, Schedule 1, section 1.13, and the parallel provisions of Tariff, Attachment K-Appendix.

Corporate Guaranty:

"Corporate Guaranty" shall mean a legal document used by one entity to guaranty the obligations of another entity.

Cost of New Entry:

"Cost of New Entry" or "CONE" shall mean the nominal levelized cost of a Reference Resource, as determined in accordance with Tariff, Attachment DD, section 5.

Costs:

As used in Tariff, Part IV, Part VI and related attachments, "Costs" shall mean costs and expenses, as estimated or calculated, as applicable, including, but not limited to, capital expenditures, if applicable, and overhead, return, and the costs of financing and taxes and any Incidental Expenses.

Counterparty:

"Counterparty" shall mean PJMSettlement as the contracting party, in its name and own right and not as an agent, to an agreement or transaction with a Market Participant or other entities, including the agreements and transactions with customers regarding transmission service and other transactions under the PJM Tariff and the Operating Agreement. PJMSettlement shall not

be a counterparty to (i) any bilateral transactions between Members, or (ii) any Member's self-supply of energy to serve its load, or (iii) any Member's self-schedule of energy reported to the Office of the Interconnection to the extent that energy serves that Member's own .

Credit Available for Export Transactions:

"Credit Available for Export Transactions" shall mean a set-aside of credit to be used for Export Transactions that is allocated by each Market Participant from its Credit Available for Virtual Transactions, and which reduces the Market Participant's Credit Available for Virtual Transactions accordingly.

Credit Available for Virtual Transactions:

"Credit Available for Virtual Transactions" shall mean the Market Participant's Working Credit Limit for Virtual Transactions calculated on its credit provided in compliance with its Peak Market Activity requirement plus available credit submitted above that amount, less any unpaid billed and unbilled amounts owed to PJMSettlement, plus any unpaid unbilled amounts owed by PJMSettlement to the Market Participant, less any applicable credit required for Minimum Participation Requirements, FTR, Export Transactions, or other credit requirement determinants as defined in Tariff, Attachment Q.

Credit Breach:

"Credit Breach" shall mean the status of a Participant that does not currently meet the requirements of Tariff, Attachment Q or other provisions of the Agreements.

Credit-Limited Offer:

"Credit-Limited Offer" shall mean a Sell Offer that is submitted by a Market Seller in an RPM Auction subject to a maximum credit requirement specified by such Market Seller.

Credit Score:

"Credit Score" shall mean a composite numerical score scaled from 0-100 as calculated by PJMSettlement that incorporates various predictors of creditworthiness.

CTS Enabled Interface:

"CTS Enabled Interface" shall mean an interface between the PJM Control Area and an adjacent Control Area at which the Office of the Interconnection has authorized the use of Coordinated Transaction Scheduling ("CTS"), designated in Schedule A to the Joint Operating Agreement Among and Between New York Independent System Operator Inc. and PJM Interconnection, L.L.C. (PJM Rate Schedule FERC No. 45).

CTS Interface Bid:

"CTS Interface Bid" shall mean a unified real-time bid to simultaneously purchase and sell energy on either side of a CTS Enabled Interface in accordance with the procedures of Operating Agreement, Schedule 1, section 1.13, and the parallel provisions of Tariff, Attachment K-Appendix.

Curtailment:

"Curtailment" shall mean a reduction in firm or non-firm transmission service in response to a transfer capability shortage as a result of system reliability conditions.

Curtailment Service Provider:

"Curtailment Service Provider" or "CSP" shall mean a Member or a Special Member, which action on behalf of itself or one or more other Members or non-Members, participates in the PJM Interchange Energy Market, Ancillary Services markets, and/or Reliability Pricing Model by causing a reduction in demand.

Customer Facility:

"Customer Facility" shall mean generation facilities or Merchant Transmission Facilities interconnected with or added to the Transmission System pursuant to an Interconnection Request under Subparts A of Tariff, Part IV.

Customer-Funded Upgrade:

"Customer-Funded Upgrade" shall mean any Network Upgrade, Local Upgrade, or Merchant Network Upgrade for which cost responsibility (i) is imposed on an Interconnection Customer or an Eligible Customer pursuant to Tariff, section 217, or (ii) is voluntarily undertaken by a New Service Customer in fulfillment of an Upgrade Request. No Network Upgrade, Local Upgrade or Merchant Network Upgrade or other transmission expansion or enhancement shall be a Customer-Funded Upgrade if and to the extent that the costs thereof are included in the rate base of a public utility on which a regulated return is earned.

Customer Interconnection Facilities:

"Customer Interconnection Facilities" shall mean all facilities and equipment owned and/or controlled, operated and maintained by Interconnection Customer on Interconnection Customer's side of the Point of Interconnection identified in the appropriate appendices to the Interconnection Service Agreement and to the Interconnection Construction Service Agreement, including any modifications, additions, or upgrades made to such facilities and equipment, that are necessary to physically and electrically interconnect the Customer Facility with the Transmission System.

Daily Deficiency Rate:

"Daily Deficiency Rate" shall mean the rate employed to assess certain deficiency charges under

Tariff, Attachment DD, sections 7, 8, 9, or 13.

Daily Unforced Capacity Obligation:

"Daily Unforced Capacity Obligation" shall mean the capacity obligation of a Load Serving Entity during the Delivery Year, determined in accordance with Reliability Assurance Agreement, Schedule 8, or, as to an FRR entity, in Reliability Assurance Agreement, Schedule 8.1.

Day-ahead Congestion Price:

"Day-ahead Congestion Price" shall mean the Congestion Price resulting from the Day-ahead Energy Market.

Day-ahead Energy Market:

"Day-ahead Energy Market" shall mean the schedule of commitments for the purchase or sale of energy and payment of Transmission Congestion Charges developed by the Office of the Interconnection as a result of the offers and specifications submitted in accordance with Operating Agreement, Schedule 1, section 1.10 and the parallel provisions of Tariff, Attachment K-Appendix.

Day-ahead Loss Price:

"Day-ahead Loss Price" shall mean the Loss Price resulting from the Day-ahead Energy Market.

Day-ahead Prices:

"Day-ahead Prices" shall mean the Locational Marginal Prices resulting from the Day-ahead Energy Market.

Day-ahead Scheduling Reserves:

"Day-ahead Scheduling Reserves" shall mean thirty-minute reserves as defined by the Reliability*First* Corporation and SERC.

Day-ahead Scheduling Reserves Market:

"Day-ahead Scheduling Reserves Market" shall mean the schedule of commitments for the purchase or sale of Day-ahead Scheduling Reserves developed by the Office of the Interconnection as a result of the offers and specifications submitted in accordance with Operating Agreement, Schedule 1, section 1.10 and the parallel provisions of Tariff, Attachment K-Appendix.

Day-ahead Scheduling Reserves Requirement:

"Day-ahead Scheduling Reserves Requirement" shall mean the sum of Base Day-ahead Scheduling Reserves Requirement and Additional Day-ahead Scheduling Reserves Requirement.

Day-ahead Scheduling Reserves Resources:

"Day-ahead Scheduling Reserves Resources" shall mean synchronized and non-synchronized generation resources and Demand Resources electrically located within the PJM Region that are capable of providing Day-ahead Scheduling Reserves.

Day-ahead System Energy Price:

"Day-ahead System Energy Price" shall mean the System Energy Price resulting from the Day-ahead Energy Market.

Deactivation:

"Deactivation" shall mean the retirement or mothballing of a generating unit governed by Tariff, Part V.

Deactivation Avoidable Cost Credit:

"Deactivation Avoidable Cost Credit" shall mean the credit paid to Generation Owners pursuant to Tariff, section 114.

Deactivation Avoidable Cost Rate:

"Deactivation Avoidable Cost Rate" shall mean the formula rate established pursuant to Tariff, section 115 of this Tariff.

Deactivation Date:

"Deactivation Date" shall mean the date a generating unit within the PJM Region is either retired or mothballed and ceases to operate.

Decrement Bid:

"Decrement Bid" shall mean a type of Virtual Transaction that is a bid to purchase energy at a specified location in the Day-ahead Energy Market. A cleared Decrement Bid results in scheduled load at the specified location in the Day-ahead Energy Market.

Default:

As used in the Interconnection Service Agreement and Construction Service Agreement, "Default" shall mean the failure of a Breaching Party to cure its Breach in accordance with the applicable provisions of an Interconnection Service Agreement or Construction Service Agreement.

Delivering Party:

"Delivering Party" shall mean the entity supplying capacity and energy to be transmitted at Point(s) of Receipt.

Delivery Year:

"Delivery Year" shall mean the Planning Period for which a Capacity Resource is committed pursuant to the auction procedures specified in Tariff, Attachment DD, , or pursuant to an FRR Capacity Plan under Reliability Assurance Agreement, Schedule 8.1.

Demand Bid:

"Demand Bid" shall mean a bid, submitted by a Load Serving Entity in the Day-ahead Energy Market, to purchase energy at its contracted load location, for a specified timeframe and megawatt quantity, that if cleared will result in energy being scheduled at the specified location in the Day-ahead Energy Market and in the physical transfer of energy during the relevant Operating Day.

Demand Bid Limit:

"Demand Bid Limit" shall mean the largest MW volume of Demand Bids that may be submitted by a Load Serving Entity for any hour of an Operating Day, as determined pursuant to Operating Agreement, Schedule 1, section 1.10.1B, and the parallel provisions of Tariff, Attachment K-Appendix.

Demand Bid Screening:

"Demand Bid Screening" shall mean the process by which Demand Bids are reviewed against the applicable Demand Bid Limit, and rejected if they would exceed that limit, as determined pursuant to Operating Agreement, Schedule 1, section 1.10.1B, and the parallel provisions of Tariff, Attachment K-Appendix.

Demand Resource:

"Demand Resource" shall mean a resource with the capability to provide a reduction in demand.

Demand Resource Factor or DR Factor:

"Demand Resource Factor" or ("DR Factor") shall have the meaning specified in the Reliability Assurance Agreement.

Designated Agent:

"Designated Agent" shall mean any entity that performs actions or functions on behalf of the

Transmission Provider, a Transmission Owner, an Eligible Customer, or the Transmission Customer required under the Tariff.

Designated Entity:

"Designated Entity" shall have the same meaning provided in the Operating Agreement.

Direct Assignment Facilities:

"Direct Assignment Facilities" shall mean facilities or portions of facilities that are constructed for the sole use/benefit of a particular Transmission Customer requesting service under the Tariff. Direct Assignment Facilities shall be specified in the Service Agreement that governs service to the Transmission Customer and shall be subject to Commission approval.

Direct Load Control:

"Direct Load Control" shall mean load reduction that is controlled directly by the Curtailment Service Provider's market operations center or its agent, in response to PJM instructions.

Dispatch Rate:

"Dispatch Rate" shall mean the control signal, expressed in dollars per megawatt-hour, calculated and transmitted continuously and dynamically to direct the output level of all generation resources dispatched by the Office of the Interconnection in accordance with the Offer Data.

Dynamic Schedule:

"Dynamic Schedule" shall have the same meaning provided in the Operating Agreement.

Dynamic Transfer:

"Dynamic Transfer" shall have the same meaning provided in the Operating Agreement.

Economic-based Enhancement or Expansion:

"Economic-based Enhancement or Expansion" shall have the same meaning provided in the Operating Agreement.

Economic Load Response Participant:

"Economic Load Response Participant" shall mean a Member or Special Member that qualifies under Operating Agreement, Schedule 1, section 1.5A, and the parallel provisions of Tariff, Attachment K-Appendix, to participate in the PJM Interchange Energy Market and/or Ancillary Services markets through reductions in demand.

Economic Maximum:

"Economic Minimum" shall mean the lowest incremental MW output level, submitted to PJM market systems by a Market Participant, that a unit can achieve while following economic dispatch.

Effective FTR Holder:

"Effective FTR Holder" shall mean:

(i) For an FTR Holder that is either a (a) privately held company, or (b) a municipality or electric cooperative, as defined in the Federal Power Act, such FTR Holder, together with any Affiliate, subsidiary or parent of the FTR Holder, any other entity that is under common ownership, wholly or partly, directly or indirectly, or has the ability to influence, directly or indirectly, the management or policies of the FTR Holder; or

(ii) For an FTR Holder that is a publicly traded company including a wholly owned subsidiary of a publicly traded company, such FTR Holder, together with any Affiliate, subsidiary or parent of the FTR Holder, any other PJM Member has over 10% common ownership with the FTR Holder, wholly or partly, directly or indirectly, or has the ability to influence, directly or indirectly, the management or policies of the FTR Holder; or

(iii) an FTR Holder together with any other PJM Member, including also any Affiliate, subsidiary or parent of such other PJM Member, with which it shares common ownership, wholly or partly, directly or indirectly, in any third entity which is a PJM Member (e.g., a joint venture).

EFORd:

"EFORd" shall have the meaning specified in the PJM Reliability Assurance Agreement.

Eligible Customer:

"Eligible Customer" shall mean:

(i) Any electric utility (including any Transmission Owner and any power marketer), Federal power marketing agency, or any person generating electric energy for sale for resale is an Eligible Customer under the Tariff. Electric energy sold or produced by such entity may be electric energy produced in the United States, Canada or Mexico. However, with respect to transmission service that the Commission is prohibited from ordering by Section 212(h) of the Federal Power Act, such entity is eligible only if the service is provided pursuant to a state requirement that the Transmission Provider or Transmission Owner offer the unbundled transmission service, or pursuant to a voluntary offer of such service by a Transmission Owner.

(ii) Any retail customer taking unbundled transmission service pursuant to a state requirement

that the Transmission Provider or a Transmission Owner offer the transmission service, or pursuant to a voluntary offer of such service by a Transmission Owner, is an Eligible Customer under the Tariff. As used in Tariff, Part VI, Eligible Customer shall mean only those Eligible Customers that have submitted a Completed Application.

Emergency Action:

"Emergency Action" shall mean any emergency action for locational or system-wide capacity shortages that either utilizes pre-emergency mandatory load management reductions or other emergency capacity, or initiates a more severe action including, but not limited to, a Voltage Reduction Warning, Voltage Reduction Action, Manual Load Dump Warning, or Manual Load Dump Action.

Emergency Condition:

"Emergency Condition" shall mean a condition or situation (i) that in the judgment of any Interconnection Party is imminently likely to endanger life or property; or (ii) that in the judgment of the Interconnected Transmission Owner or Transmission Provider is imminently likely (as determined in a non-discriminatory manner) to cause a material adverse effect on the security of, or damage to, the Transmission System, the Interconnection Facilities, or the transmission systems or distribution systems to which the Transmission System is directly or indirectly connected; or (iii) that in the judgment of Interconnection Customer is imminently likely (as determined in a non-discriminatory manner) to cause damage to the Customer Facility or to the Customer Interconnection Facilities. System restoration and black start shall be considered Emergency Conditions, provided that a Generation Interconnection Customer is not obligated by an Interconnection Service Agreement to possess black start capability. Any condition or situation that results from lack of sufficient generating capacity to meet load requirements or that results solely from economic conditions shall not constitute an Emergency Condition, unless one or more of the enumerated conditions or situations identified in this definition also exists.

Emergency Load Response Program:

"Emergency Load Response Program" shall mean the program by which Curtailment Service Providers may be compensated by PJM for Demand Resources that will reduce load when dispatched by PJM during emergency conditions, and is described in Operating Agreement, Schedule 1, section 8 and the parallel provisions of Tariff, Attachment K-Appendix.

Energy Efficiency Resource:
"Energy Efficiency Resource" shall have the meaning specified in the PJM Reliability Assurance Agreement.

Energy Market Opportunity Cost:

"Energy Market Opportunity Cost" shall mean the difference between (a) the forecasted cost to operate a specific generating unit when the unit only has a limited number of available run hours due to limitations imposed on the unit by Applicable Laws and Regulations (as defined in PJM

Tariff), and (b) the forecasted future hourly Locational Marginal Price at which the generating unit could run while not violating such limitations. Energy Market Opportunity Cost therefore is the value associated with a specific generating unit's lost opportunity to produce energy during a higher valued period of time occurring within the same compliance period, which compliance period is determined by the applicable regulatory authority and is reflected in the rules set forth in PJM Manual 15. Energy Market Opportunity Costs shall be limited to those resources which are specifically delineated in Schedule 2 of the Operating Agreement.

Energy Resource:

"Energy Resource" shall mean a generating facility that is not a Capacity Resource.

Energy Settlement Area:

"Energy Settlement Area" shall mean the bus or distribution of busses that represents the physical location of Network Load and by which the obligations of the Network Customer to PJM are settled.

Energy Storage Resource:

"Energy Storage Resource" shall mean flywheel or battery storage facility solely used for short term storage and injection of energy at a later time to participate in the PJM energy and/or Ancillary Services markets as a Market Seller.

Energy Transmission Injection Rights:

"Energy Transmission Injection Rights" shall mean the rights to schedule energy deliveries at a specified point on the Transmission System. Energy Transmission Injection Rights may be awarded only to a Merchant D.C. Transmission Facility that connects the Transmission System to another control area. Deliveries scheduled using Energy Transmission Injection Rights have rights similar to those under Non-Firm Point-to-Point Transmission Service.

Environmental Laws:

"Environmental Laws" shall mean applicable Laws or Regulations relating to pollution or protection of the environment, natural resources or human health and safety.

Environmentally-Limited Resource:

"Environmentally-Limited Resource" shall mean a resource which has a limit on its run hours imposed by a federal, state, or other governmental agency that will significantly limit its availability, on either a temporary or long-term basis. This includes a resource that is limited by a governmental authority to operating only during declared PJM capacity emergencies.

Equivalent Load:

"Equivalent Load" shall mean the sum of a Market Participant's net system requirements to serve its customer load in the PJM Region, if any, plus its net bilateral transactions.

Existing Generation Capacity Resource:

"Existing Generation Capacity Resource" shall have the meaning specified in the Reliability Assurance Agreement.

Export Credit Exposure:

"Export Credit Exposure" is determined for each Market Participant for a given Operating Day, and shall mean the sum of credit exposures for the Market Participant's Export Transactions for that Operating Day and for the preceding Operating Day.

Export Nodal Reference Price:

"Export Nodal Reference Price" at each location is the 97th percentile, shall be, the real-time hourly integrated price experienced over the corresponding two-month period in the preceding calendar year, calculated separately for peak and off-peak time periods. The two-month time periods used in this calculation shall be January and February, March and April, May and June, July and August, September and October, and November and December.

Export Transaction:

"Export Transaction" shall be a transaction by a Market Participant that results in the transfer of energy from within the PJM Control Area to outside the PJM Control Area. Coordinated External Transactions that result in the transfer of energy from the PJM Control Area to an adjacent Control Area are one form of Export Transaction.

Export Transaction Price Factor:

"Export Transaction Price Factor" for a prospective time interval shall be the greater of (i) PJM's forecast price for the time interval, if available, or (ii) the Export Nodal Reference Price, but shall not exceed the Export Transaction's dispatch ceiling price cap, if any, for that time interval. The Export Transaction Price Factor for a past time interval shall be calculated in the same manner as for a prospective time interval, except that the Export Transaction Price Factor may use a tentative or final settlement price, as available. If an Export Nodal Reference Price is not available for a particular time interval, PJM may use an Export Transaction Price Factor for that time interval based on an appropriate alternate reference price.

Export Transaction Screening:

"Export Transaction Screening" shall be the process PJM uses to review the Export Credit Exposure of Export Transactions against the Credit Available for Export Transactions, and deny or curtail all or a portion of an Export Transaction, if the credit required for such transactions is greater than the credit available for the transactions.

Export Transactions Net Activity:

"Export Transactions Net Activity" shall mean the aggregate net total, resulting from Export Transactions, of (i) Spot Market Energy charges, (ii) Transmission Congestion Charges, and (iii) Transmission Loss Charges, calculated as set forth in Operating Agreement, Schedule 1 and the parallel provisions of Tariff, Attachment K-Appendix. Export Transactions Net Activity may be positive or negative.

Extended Primary Reserve Requirement:

"Extended Primary Reserve Requirement" shall equal the Primary Reserve Requirement in a Reserve Zone or Reserve Sub-zone, plus additional reserves scheduled under emergency conditions necessary to address operational uncertainty. The Extended Primary Reserve Requirement is calculated in accordance with the PJM Manuals.

Extended Summer Demand Resource:

"Extended Summer Demand Resource" shall have the meaning specified in the Reliability Assurance Agreement.

Extended Summer Resource Price Adder:

"Extended Summer Resource Price Adder" shall mean, for Delivery Years through May 31, 2018, an addition to the marginal value of Unforced Capacity as necessary to reflect the price of Annual Resources and Extended Summer Demand Resources required to meet the applicable Minimum Extended Summer Resource Requirement.

Extended Synchronized Reserve Requirement:

"Extended Synchronized Reserve Requirement" shall equal the Synchronized Reserve Requirement in a Reserve Zone or Reserve Sub-zone, plus additional reserves scheduled under emergency conditions necessary to address operational uncertainty. The Extended Synchronized Reserve Requirement is calculated in accordance with the PJM Manuals.

External Market Buyer:

"External Market Buyer" shall mean a Market Buyer making purchases of energy from the PJM Interchange Energy Market for consumption by end-users outside the PJM Region, or for load in the PJM Region that is not served by Network Transmission Service.

External Resource:

"External Resource" shall mean a generation resource located outside the metered boundaries of the PJM Region.

Facilities Study:

"Facilities Study" shall be an engineering study conducted by the Transmission Provider (in coordination with the affected Transmission Owner(s)) to: (1) determine the required modifications to the Transmission Provider's Transmission System necessary to implement the conclusions of the System Impact Study; and (2) complete any additional studies or analyses documented in the System Impact Study or required by PJM Manuals, and determine the required modifications to the Transmission Provider's Transmission System based on the conclusions of such additional studies. The Facilities Study shall include the cost and scheduled completion date for such modifications, that will be required to provide the requested transmission service or to accommodate a New Service Request. As used in the Interconnection Service Agreement or Construction Service Agreement, Facilities Study shall mean that certain Facilities Study conducted by Transmission Provider (or at its direction) to determine the design and specification of the Customer Funded Upgrades necessary to accommodate the New Service Customer's New Service Request in accordance with Tariff, Part VI, section 207.

Federal Power Act:

"Federal Power Act" shall mean the Federal Power Act, as amended, 16 U.S.C. §§ 791a, et seq.

FERC:

"FERC" shall mean the Federal Energy Regulatory Commission or any successor federal agency, commission or department exercising jurisdiction over the Tariff, Operating Agreement and Reliability Assurance Agreement.

FERC Market Rules:

"FERC Market Rules" mean the market behavior rules and the prohibition against electric energy market manipulation codified by the Commission in its Rules and Regulations at 18 CFR §§ 1c.2 and 35.37, respectively; the Commission-approved PJM Market Rules and any related proscriptions or any successor rules that the Commission from time to time may issue, approve or otherwise establish.

Final RTO Unforced Capacity Obligation:

"Final RTO Unforced Capacity Obligation" shall mean the capacity obligation for the PJM Region, determined in accordance with Schedule 8 of the Reliability Assurance Agreement.

Financial Close:

"Financial Close" shall mean the Capacity Market Seller has demonstrated that the Capacity Market Seller or its agent has completed the act of executing the material contracts and/or other documents necessary to (1) authorize construction of the project and (2) establish the necessary funding for the project under the control of an independent third-party entity. A sworn, notarized certification of an independent engineer certifying to such facts, and that the engineer has

personal knowledge of, or has engaged in a diligent inquiry to determine, such facts, shall be sufficient to make such demonstration. For resources that do not have external financing, Financial Close shall mean the project has full funding available, and that the project has been duly authorized to proceed with full construction of the material portions of the project by the appropriate governing body of the company funding such project. A sworn, notarized certification by an officer of such company certifying to such facts, and that the officer has personal knowledge of, or has engaged in a diligent inquiry to determine, such facts, shall be sufficient to make such demonstration.

Financial Security:

"Financial Security" shall mean a cash deposit or letter of credit in an amount and form determined by and acceptable to PJMSettlement, provided by a Participant to PJMSettlement as security in order to participate in the PJM Markets or take Transmission Service.

Financial Transmission Right:

"Financial Transmission Right" or "FTR" shall mean a right to receive Transmission Congestion Credits as specified in Operating Agreement, Schedule 1, section 5.2.2 and the parallel provisions of Tariff, Attachment K-Appendix.

Financial Transmission Right Obligation:

"Financial Transmission Right Obligation" shall mean a right to receive Transmission Congestion Credits as specified in Operating Agreement, Schedule 1, section 5.2.2(b), and the parallel provisions of Tariff, Attachment K-Appendix.

Financial Transmission Right Option:

"Financial Transmission Right Option" shall mean a right to receive Transmission Congestion Credits as specified in Operating Agreement, Schedule 1, section 5.2.2(c), and the parallel provisions of Tariff, Attachment K-Appendix.

Firm Point-To-Point Transmission Service:

"Firm Point-To-Point Transmission Service" shall mean Transmission Service under the Tariff that is reserved and/or scheduled between specified Points of Receipt and Delivery pursuant to Tariff, Part II.

Firm Transmission Withdrawal Rights:

"Firm Transmission Withdrawal Rights" shall mean the rights to schedule energy and capacity withdrawals from a Point of Interconnection of a Merchant Transmission Facility with the Transmission System. Firm Transmission Withdrawal Rights may be awarded only to a Merchant D.C. Transmission Facility that connects the Transmission System with another control area. Withdrawals scheduled using Firm Transmission Withdrawal Rights have rights

similar to those under Firm Point-to-Point Transmission Service.

First Incremental Auction:

"First Incremental Auction" shall mean an Incremental Auction conducted 20 months prior to the start of the Delivery Year to which it relates.

Forecast Pool Requirement:

"Forecast Pool Requirement" shall have the meaning specified in the Reliability Assurance Agreement.

Foreign Guaranty:

"Foreign Guaranty" shall mean a Corporate Guaranty provided by an Affiliate of a Participant that is domiciled in a foreign country, and meets all of the provisions of Tariff, Attachment Q.

Form 715 Planning Criteria:

"Form 715 Planning Criteria" shall have the same meaning provided in the Operating Agreement.

FTR Credit Limit:

"FTR Credit Limit" shall be equal to the amount of credit established with PJMSettlement that a Participant has specifically designated to PJMSettlement to be set aside and used for FTR activity. Any such credit so set aside shall not be considered available to satisfy any other credit requirement the Participant may have with PJMSettlement.

FTR Credit Requirement:

"FTR Credit Requirement" shall be the amount of credit that a Participant must provide in order to support the FTR positions that it holds and/or is bidding for. The FTR Credit Requirement shall not include months for which the invoicing has already been completed, provided that PJMSettlement shall have up to two Business Days following the date of the invoice completion to make such adjustments in its credit systems.

FTR Flow Undiversified:

"FTR Flow Undiversified" shall have the meaning established in Tariff, Attachment Q, section V.G.

FTR Geographically Undiversified:

"FTR Geographically Undiversified" shall have the meaning established in Tariff, Attachment Q, section V.G.

FTR Historical Value:

For each FTR for each month, "FTR Historical Value" shall mean the historical weighted average value over three years for the FTR path using the following weightings: 50% - most recent year; 30% - second year; 20% - third year. FTR Historical Values shall be calculated separately for on-peak, off-peak, and 24-hour FTRs for each month of the year. FTR Historical Values shall be adjusted by plus or minus ten percent (10%) for cleared counterflow or normal flow FTRs, respectively, in order to mitigate exposure due to uncertainty and fluctuations in actual FTR value.

FTR Holder:

"FTR Holder" shall mean the PJM Member that has acquired and possesses an FTR.

FTR Monthly Credit Requirement Contribution:

For each FTR, for each month, "FTR Monthly Credit Requirement Contribution" shall mean the total FTR cost for the month, prorated on a daily basis, less the FTR Historical Value for the month. For cleared FTRs, this contribution may be negative; prior to clearing, FTRs with negative contribution shall be deemed to have zero contribution.

FTR Net Activity:

"FTR Net Activity" shall mean the aggregate net value of the billing line items for auction revenue rights credits, FTR auction charges, FTR auction credits, and FTR congestion credits, and shall also include day-ahead and balancing/real-time congestion charges up to a maximum net value of the sum of the foregoing auction revenue rights credits, FTR auction charges, FTR auction credits and FTR congestion credits.

FTR Participant:

"FTR Participant" shall mean any Market Participant that is required to provide Financial Security in order to participate in PJM's FTR auctions.

FTR Portfolio Auction Value:

"FTR Portfolio Auction Value" shall mean for each Participant (or Participant account), the sum, calculated on a monthly basis, across all FTRs, of the FTR price times the FTR volume in MW.

Full Notice to Proceed:

"Full Notice to Proceed" shall mean that all material third party contractors have been given the notice to proceed with construction by the Capacity Market Seller or its agent, with a guaranteed completion date backed by liquidated damages.

Generating Market Buyer:

"Generating Market Buyer" shall mean an Internal Market Buyer that is a Load Serving Entity that owns or has contractual rights to the output of generation resources capable of serving the Market Buyer's load in the PJM Region, or of selling energy or related services in the PJM Interchange Energy Market or elsewhere.

Generation Capacity Resource:

"Generation Capacity Resource" shall have the meaning specified in the Reliability Assurance Agreement.

Generation Interconnection Customer:

"Generation Interconnection Customer" shall mean an entity that submits an Interconnection Request to interconnect a new generation facility or to increase the capacity of an existing generation facility interconnected with the Transmission System in the PJM Region.

Generation Interconnection Facilities Study:

"Generation Interconnection Facilities Study" shall mean a Facilities Study related to a Generation Interconnection Request.

Generation Interconnection Feasibility Study:

"Generation Interconnection Feasibility Study" shall mean a study conducted by the Transmission Provider (in coordination with the affected Transmission Owner(s)) in accordance with Tariff, section 36.2.

Generation Interconnection Request:

"Generation Interconnection Request" shall mean a request by a Generation Interconnection Customer pursuant to Tariff, Part IV, subpart A, of the Tariff to interconnect a generating unit with the Transmission System or to increase the capacity of a generating unit interconnected with the Transmission System in the PJM Region.

Generation Owner:

"Generation Owner" shall mean an entity that owns or otherwise controls and operates one or more operating generating units in the PJM Region.

Generator Forced Outage:

"Generator Forced Outage" shall mean an immediate reduction in output or capacity or removal from service, in whole or in part, of a generating unit by reason of an Emergency or threatened Emergency, unanticipated failure, or other cause beyond the control of the owner or operator of

the facility, as specified in the relevant portions of the PJM Manuals. A reduction in output or removal from service of a generating unit in response to changes in market conditions shall not constitute a Generator Forced Outage.

Generator Maintenance Outage:

"Generator Maintenance Outage" shall mean the scheduled removal from service, in whole or in part, of a generating unit in order to perform necessary repairs on specific components of the facility, if removal of the facility meets the guidelines specified in the PJM Manuals.

Generator Planned Outage:

"Generator Planned Outage" shall mean the scheduled removal from service, in whole or in part, of a generating unit for inspection, maintenance or repair with the approval of the Office of the Interconnection in accordance with the PJM Manuals.

Good Utility Practice:

"Good Utility Practice" shall mean any of the practices, methods and acts engaged in or approved by a significant portion of the electric utility industry during the relevant time period, or any of the practices, methods and acts which, in the exercise of reasonable judgment in light of the facts known at the time the decision was made, could have been expected to accomplish the desired result at a reasonable cost consistent with good business practices, reliability, safety and expedition. Good Utility Practice is not intended to be limited to the optimum practice, method, or act to the exclusion of all others, but rather is intended to include acceptable practices, methods, or acts generally accepted in the region; including those practices required by Federal Power Act Section 215(a)(4).

Governmental Authority:

"Governmental Authority" shall mean any federal, state, local or other governmental, regulatory or administrative agency, court, commission, department, board, or other governmental subdivision, legislature, rulemaking board, tribunal, arbitrating body, or other governmental authority having jurisdiction over any Interconnection Party or Construction Party or regarding any matter relating to an Interconnection Service Agreement or Construction Service Agreement, as applicable.

Hazardous Substances:

"Hazardous Substance" shall mean any chemicals, materials or substances defined as or included in the definition of "hazardous substances," "hazardous wastes," "hazardous materials," "hazardous constituents," "restricted hazardous materials," "extremely hazardous substances," "toxic substances," "radioactive substances," "contaminants," "pollutants," "toxic pollutants" or words of similar meaning and regulatory effect under any applicable Environmental Law, or any other chemical, material or substance, exposure to which is prohibited, limited or regulated by

any applicable Environmental Law.

Hot Weather Alert:

"Hot Weather Alert" shall mean the notice provided by PJM to PJM Members, Transmission Owners, resource owners and operators, customers, and regulators to prepare personnel and facilities for extreme hot and/or humid weather conditions which may cause capacity requirements and/or unit unavailability to be substantially higher than forecast are expected to persist for an extended period.

IDR Transfer Agreement:

"IDR Transfer Agreement" shall mean an agreement to transfer, subject to the terms of Tariff, section 49B, Incremental Deliverability Rights to a party for the purpose of eliminating or reducing the need for Local or Network Upgrades that would otherwise have been the responsibility of the party receiving such rights.

Immediate-need Reliability Project:

"Immediate-need Reliability Project" shall have the same meaning provided in the Operating Agreement.

Inadvertent Interchange:

"Inadvertent Interchange" shall mean the difference between net actual energy flow and net scheduled energy flow into or out of the individual Control Areas operated by PJM.

Incidental Expenses:

"Incidental Expenses" shall mean those expenses incidental to the performance of construction pursuant to an Interconnection Construction Service Agreement, including, but not limited to, the expense of temporary construction power, telecommunications charges, Interconnected Transmission Owner expenses associated with, but not limited to, document preparation, design review, installation, monitoring, and construction-related operations and maintenance for the Customer Facility and for the Interconnection Facilities.

Incremental Auction:

"Incremental Auction" shall mean any of several auctions conducted for a Delivery Year after the Base Residual Auction for such Delivery Year and before the first day of such Delivery Year, including the First Incremental Auction, Second Incremental Auction, Third Incremental Auction or Conditional Incremental Auction. Incremental Auctions (other than the Conditional Incremental Auction), shall be held for the purposes of:

(i) allowing Market Sellers that committed Capacity Resources in the Base Residual Auction for a Delivery Year, which subsequently are determined to be unavailable to deliver the

committed Unforced Capacity in such Delivery Year (due to resource retirement, resource cancellation or construction delay, resource derating, EFORd increase, a decrease in the Nominated Demand Resource Value of a Planned Demand Resource, delay or cancellation of a Qualifying Transmission Upgrade, or similar occurrences) to submit Buy Bids for replacement Capacity Resources; and

(ii) allowing the Office of the Interconnection to reduce or increase the amount of committed capacity secured in prior auctions for such Delivery Year if, as a result of changed circumstances or expectations since the prior auction(s), there is, respectively, a significant excess or significant deficit of committed capacity for such Delivery Year, for the PJM Region or for an LDA.

Incremental Auction Revenue Rights:

"Incremental Auction Revenue Rights" shall mean the additional Auction Revenue Rights, not previously feasible, created by the addition of Incremental Rights-Eligible Required Transmission Enhancements, Merchant Transmission Facilities, or of one or more Customer-Funded Upgrades.

Incremental Available Transfer Capability Revenue Rights:

"Incremental Available Transfer Capability Revenue Rights" shall mean the rights to revenues that are derived from incremental Available Transfer Capability created by the addition of Merchant Transmission Facilities or of one of more Customer-Funded Upgrades.

Incremental Capacity Transfer Right:

"Incremental Capacity Transfer Right" shall mean a Capacity Transfer Right allocated to a Generation Interconnection Customer or Transmission Interconnection Customer obligated to fund a transmission facility or upgrade, to the extent such upgrade or facility increases the transmission import capability into a Locational Deliverability Area, or a Capacity Transfer Right allocated to a Responsible Customer in accordance with Schedule 12A of the Tariff.

Incremental Deliverability Rights (IDRs):

"Incremental Deliverability Rights" or "IDRs" shall mean the rights to the incremental ability, resulting from the addition of Merchant Transmission Facilities, to inject energy and capacity at a point on the Transmission System, such that the injection satisfies the deliverability requirements of a Capacity Resource. Incremental Deliverability Rights may be obtained by a generator or a Generation Interconnection Customer, pursuant to an IDR Transfer Agreement, to satisfy, in part, the deliverability requirements necessary to obtain Capacity Interconnection Rights.

Incremental Multi-Driver Project:

"Incremental Multi-Driver Project" shall have the same meaning provided in the Operating

Agreement.

Incremental Rights-Eligible Required Transmission Enhancements:

"Incremental Rights-Eligible Required Transmission Enhancements" shall mean Regional Facilities and Necessary Lower Voltage Facilities or Lower Voltage Facilities (as defined in Schedule 12 of the Tariff) and meet one of the following criteria: (1) cost responsibility is assigned to non-contiguous Zones that are not directly electrically connected; or (2) cost responsibility is assigned to Merchant Transmission Providers that are Responsible Customers.

Increment Offer:

"Increment Offer" shall mean a type of Virtual Transaction that is an offer to sell energy at a specified location in the Day-ahead Energy Market. A cleared Increment Offer results in scheduled generation at the specified location in the Day-ahead Energy Market.

Initial Operation:

"Initial Operation" shall mean the commencement of operation of the Customer Facility and Customer Interconnection Facilities after satisfaction of the conditions of Section 1.4 of Appendix 2 of an Interconnection Service Agreement.

Initial Study:

"Initial Study" shall mean a study of a Completed Application conducted by the Transmission Provider (in coordination with the affected Transmission Owner(s)) in accordance with Section 19 or Section 32 of the Tariff.

Interconnected Entity:

"Interconnected Entity" shall mean either the Interconnection Customer or the Interconnected Transmission Owner; Interconnected Entities shall mean both of them.

Interconnected Transmission Owner:

"Interconnected Transmission Owner" shall mean the Transmission Owner to whose transmission facilities or distribution facilities Customer Interconnection Facilities are, or as the case may be, a Customer Facility is, being directly connected. When used in an Interconnection Construction Service Agreement, the term may refer to a Transmission Owner whose facilities must be upgraded pursuant to the Facilities Study, but whose facilities are not directly interconnected with those of the Interconnection Customer.

Interconnection Construction Service Agreement:

"Interconnection Construction Service Agreement" shall mean the agreement entered into by an Interconnection Customer, Interconnected Transmission Owner and the Transmission Provider

pursuant to Tariff, Part VI, Subpart B and in the form set forth in Attachment P of the Tariff, relating to construction of Attachment Facilities, Network Upgrades, and/or Local Upgrades and coordination of the construction and interconnection of an associated Customer Facility. A separate Interconnection Construction Service Agreement will be executed with each Transmission Owner that is responsible for construction of any Attachment Facilities, Network Upgrades, or Local Upgrades associated with interconnection of a Customer Facility.

Interconnection Customer:

"Interconnection Customer" shall mean a Generation Interconnection Customer and/or a Transmission Interconnection Customer.

Interconnection Facilities:

"Interconnection Facilities" shall mean the Transmission Owner Interconnection Facilities and the Customer Interconnection Facilities.

Interconnection Feasibility Study:

"Interconnection Feasibility Study" shall mean either a Generation Interconnection Feasibility Study or Transmission Interconnection Feasibility Study.

Interconnection Party:

"Interconnection Party" shall mean a Transmission Provider, Interconnection Customer, or the Interconnected Transmission Owner. Interconnection Parties shall mean all of them.

Interconnection Request:

"Interconnection Request" shall mean a Generation Interconnection Request, a Transmission Interconnection Request and/or an IDR Transfer Agreement.

Interconnection Service:

"Interconnection Service" shall mean the physical and electrical interconnection of the Customer Facility with the Transmission System pursuant to the terms of Part IV and Part VI and the Interconnection Service Agreement entered into pursuant thereto by Interconnection Customer, the Interconnected Transmission Owner and Transmission Provider.

Interconnection Service Agreement:

"Interconnection Service Agreement" shall mean an agreement among the Transmission Provider, an Interconnection Customer and an Interconnected Transmission Owner regarding interconnection under Tariff, Part IV and Part VI.

Interconnection Studies:

"Interconnection Studies" shall mean the Interconnection Feasibility Study, the System Impact Study, and the Facilities Study described in Tariff, Part IV and Part VI.

Interface Pricing Point:

"Interface Pricing Point" shall have the meaning specified in Operating Agreement, Schedule 1, section 2.6A, and the parallel provisions of Tariff, Attachment K-Appendix.

Intermittent Resource:

"Intermittent Resource" shall mean a Generation Capacity Resource with output that can vary as a function of its energy source, such as wind, solar, run of river hydroelectric power and other renewable resources.

Internal Market Buyer:

"Internal Market Buyer" shall mean a Market Buyer making purchases of energy from the PJM Interchange Energy Market for ultimate consumption by end-users inside the PJM Region that are served by Network Transmission Service.

Interregional Transmission Project:

"Interregional Transmission Project" shall mean transmission facilities that would be located within two or more neighboring transmission planning regions and are determined by each of those regions to be a more efficient or cost effective solution to regional transmission needs.

Interruption:

"Interruption" shall mean a reduction in non-firm transmission service due to economic reasons pursuant to Tariff, Part II, section 14.7.

Limited Demand Resource:

"Limited Demand Resource" shall have the meaning specified in the Reliability Assurance Agreement.

Limited Demand Resource Reliability Target:

"Limited Demand Resource Reliability Target" for the PJM Region or an LDA, shall mean the maximum amount of Limited Demand Resources determined by PJM to be consistent with the maintenance of reliability, stated in Unforced Capacity that shall be used to calculate the Minimum Extended Summer Demand Resource Requirement for Delivery Years through May 31, 2017 and the Limited Resource Constraint for the 2017/2018 and 2018/2019 Delivery Years for the PJM Region or such LDA. As more fully set forth in the PJM Manuals, PJM calculates the Limited Demand Resource Reliability Target by first: i) testing the effects of the ten-

interruption requirement by comparing possible loads on peak days under a range of weather conditions (from the daily load forecast distributions for the Delivery Year in question) against possible generation capacity on such days under a range of conditions (using the cumulative capacity distributions employed in the Installed Reserve Margin study for the PJM Region and in the Capacity Emergency Transfer Objective study for the relevant LDAs for such Delivery Year) and, by varying the assumed amounts of DR that is committed and displaces committed generation, determines the DR penetration level at which there is a ninety percent probability that DR will not be called (based on the applicable operating reserve margin for the PJM Region and for the relevant LDAs) more than ten times over those peak days; ii) testing the six-hour duration requirement by calculating the MW difference between the highest hourly unrestricted peak load and seventh highest hourly unrestricted peak load on certain high peak load days (e.g., the annual peak, loads above the weather normalized peak, or days where load management was called) in recent years, then dividing those loads by the forecast peak for those years and averaging the result; and (iii) (for the 2016/2017 and 2017/2018 Delivery Years) testing the effects of the six-hour duration requirement by comparing possible hourly loads on peak days under a range of weather conditions (from the daily load forecast distributions for the Delivery Year in question) against possible generation capacity on such days under a range of conditions (using a Monte Carlo model of hourly capacity levels that is consistent with the capacity model employed in the Installed Reserve Margin study for the PJM Region and in the Capacity Emergency Transfer Objective study for the relevant LDAs for such Delivery Year) and, by varying the assumed amounts of DR that is committed and displaces committed generation, determines the DR penetration level at which there is a ninety percent probability that DR will not be called (based on the applicable operating reserve margin for the PJM Region and for the relevant LDAs) for more than six hours over any one or more of the tested peak days. Second, PJM adopts the lowest result from these three tests as the Limited Demand Resource Reliability Target. The Limited Demand Resource Reliability Target shall be expressed as a percentage of the forecasted peak load of the PJM Region or such LDA and is converted to Unforced Capacity by multiplying [the reliability target percentage] times [the Forecast Pool Requirement] times [the DR Factor] times [the forecasted peak load of the PJM Region or such LDA, reduced by the amount of load served under the FRR Alternative].

Limited Resource Constraint:

"Limited Resource Constraint" shall mean, for the 2017/2018 Delivery Year and for FRR Capacity Plans the 2017/2018 and Delivery Years, for the PJM Region or each LDA for which the Office of the Interconnection is required under Tariff, Attachment DD, section 5.10(a) to establish a separate VRR Curve for a Delivery Year, a limit on the total amount of Unforced Capacity that can be committed as Limited Demand Resources for the 2017/2018 Delivery Year in the PJM Region or in such LDA, calculated as the Limited Demand Resource Reliability Target for the PJM Region or such LDA, respectively, minus the Short Term Resource Procurement Target for the PJM Region or such LDA, respectively.

Limited Resource Price Decrement:

"Limited Resource Price Decrement" shall mean, for the 2017/2018 Delivery Year, a difference between the clearing price for Limited Demand Resources and the clearing price for Extended Summer Demand Resources and Annual Resources, representing the cost to procure additional

Extended Summer Demand Resources or Annual Resources out of merit order when the Limited Resource Constraint is binding.

List of Approved Contractors:

"List of Approved Contractors" shall mean a list developed by each Transmission Owner and published in a PJM Manual of (a) contractors that the Transmission Owner considers to be qualified to install or construct new facilities and/or upgrades or modifications to existing facilities on the Transmission Owner's system, provided that such contractors may include, but need not be limited to, contractors that, in addition to providing construction services, also provide design and/or other construction-related services, and (b) manufacturers or vendors of major transmission-related equipment (e.g., high-voltage transformers, transmission line, circuit breakers) whose products the Transmission Owner considers acceptable for installation and use on its system.

Load Management:

"Load Management" shall mean a Demand Resource ("DR") as defined in the Reliability Assurance Agreement.

Load Management Event:

"Load Management Event" shall mean a) a single temporally contiguous dispatch of Demand Resources in a Compliance Aggregation Area during an Operating Day, or b) multiple dispatches of Demand Resources in a Compliance Aggregation Area during an Operating Day that are temporally contiguous.

Load Ratio Share:

"Load Ratio Share" shall mean the ratio of a Transmission Customer's Network Load to the Transmission Provider's total load.

Load Reduction Event:

"Load Reduction Event" shall mean a reduction in demand by a Member or Special Member for the purpose of participating in the PJM Interchange Energy Market.

Load Serving Entity (LSE):

"Load Serving Entity" or "LSE" shall have the meaning specified in the Reliability Assurance Agreement.

Load Shedding:

"Load Shedding" shall mean the systematic reduction of system demand by temporarily decreasing load in response to transmission system or area capacity shortages, system instability,

or voltage control considerations under Tariff, Part II or Part III.

Local Upgrades:

"Local Upgrades" shall mean modifications or additions of facilities to abate any local thermal loading, voltage, short circuit, stability or similar engineering problem caused by the interconnection and delivery of generation to the Transmission System. Local Upgrades shall include:

(i) Direct Connection Local Upgrades which are Local Upgrades that only serve the Customer Interconnection Facility and have no impact or potential impact on the Transmission System until the final tie-in is complete; and

(ii) Non-Direct Connection Local Upgrades which are parallel flow Local Upgrades that are not Direct Connection Local Upgrades.

Location:

"Location" as used in the Economic Load Response rules shall mean an end-use customer site as defined by the relevant electric distribution company account number.

Locational Deliverability Area (LDA):

"Locational Deliverability Area" or "LDA" shall mean a geographic area within the PJM Region that has limited transmission capability to import capacity to satisfy such area's reliability requirement, as determined by the Office of the Interconnection in connection with preparation of the Regional Transmission Expansion Plan, and as specified in Reliability Assurance Agreement, Schedule 10.1.

Locational Deliverability Area Reliability Requirement:

"Locational Deliverability Area Reliability Requirement" shall mean the projected internal capacity in the Locational Deliverability Area plus the Capacity Emergency Transfer Objective for the Delivery Year, as determined by the Office of the Interconnection in connection with preparation of the Regional Transmission Expansion Plan, less the minimum internal resources required for all FRR Entities in such Locational Deliverability Area.

Locational Price Adder:

"Locational Price Adder" shall mean an addition to the marginal value of Unforced Capacity within an LDA as necessary to reflect the price of Capacity Resources required to relieve applicable binding locational constraints.

Locational Reliability Charge:

"Locational Reliability Charge" shall have the meaning specified in the Reliability Assurance

Agreement.

Locational UCAP:

"Locational UCAP" shall mean unforced capacity that a Member with available uncommitted capacity sells in a bilateral transaction to a Member that previously committed capacity through an RPM Auction but now requires replacement capacity to fulfill its RPM Auction commitment. The Locational UCAP Seller retains responsibility for performance of the resource providing such replacement capacity.

Locational UCAP Seller:

"Locational UCAP Seller" shall mean a Member that sells Locational UCAP.

Long-lead Project:

"Long-lead Project" shall have the same meaning provided in the Operating Agreement.

Long-Term Firm Point-To-Point Transmission Service:

"Long-Term Firm Point-To-Point Transmission Service" shall mean firm Point-To-Point Transmission Service under Tariff, Part II with a term of one year or more.

Loss Price:

"Loss Price" shall mean the loss component of the Locational Marginal Price, which is the effect on transmission loss costs (whether positive or negative) associated with increasing the output of a generation resource or decreasing the consumption by a Demand Resource based on the effect of increased generation from or consumption by the resource on transmission losses, calculated as specified in Operating Agreement, Schedule 1, section 2, and the parallel provisions of Tariff, Attachment K-Appendix.

Market Monitor:

"Market Monitor" means the head of the Market Monitoring Unit.

Market Monitoring Unit or MMU:

"Market Monitoring Unit" or "MMU" means the organization that is responsible for implementing this Plan, including the Market Monitor.

Market Monitoring Unit Advisory Committee or MMU Advisory Committee:

"Market Monitoring Unit Advisory Committee" or "MMU Advisory Committee" shall mean the committee established under Tariff, Attachment M, section III.H.

Market Operations Center:

"Market Operations Center" shall mean the equipment, facilities and personnel used by or on behalf of a Market Participant to communicate and coordinate with the Office of the Interconnection in connection with transactions in the PJM Interchange Energy Market or the operation of the PJM Region.

Market Participant:

"Market Participant" shall mean a Market Buyer, a Market Seller, an Economic Load Response Participant, or all three, except when such term is being used in Attachment M of the Tariff, in which case Market Participant shall mean an entity that generates, transmits, distributes, purchases, or sells electricity, ancillary services, or any other product or service provided under the PJM Tariff or Operating Agreement within, into, out of, or through the PJM Region, but it shall not include an Authorized Government Agency that consumes energy for its own use but does not purchase or sell energy at wholesale.

Market Seller Offer Cap:

"Market Seller Offer Cap" shall mean a maximum offer price applicable to certain Market Sellers under certain conditions, as determined in accordance with Tariff, Attachment DD. section 6 and Tariff, Attachment M-Appendix, section II.E.

Market Violation:

"Market Violation" shall mean a tariff violation, violation of a Commission-approved order, rule or regulation, market manipulation, or inappropriate dispatch that creates substantial concerns regarding unnecessary market inefficiencies, as defined in 18 C.F.R. § 35.28(b)(8).

Material:

For these purposes, "Material" is defined in Tariff, Attachment Q, section I.B.3, Material Changes. For the purposes herein, the use of the term "material" is not necessarily synonymous with use of the term by governmental agencies and regulatory bodies.

Material Modification:

"Material Modification" shall mean any modification to an Interconnection Request that has a material adverse effect on the cost or timing of Interconnection Studies related to, or any Network Upgrades or Local Upgrades needed to accommodate, any Interconnection Request with a later Queue Position.

Maximum Emergency:

"Maximum Emergency" shall mean the designation of all or part of the output of a generating unit for which the designated output levels may require extraordinary procedures and therefore

are available to the Office of the Interconnection only when the Office of the Interconnection declares a Maximum Generation Emergency and requests generation designated as Maximum Emergency to run. The Office of the Interconnection shall post on the PJM website the aggregate amount of megawatts that are classified as Maximum Emergency.

Maximum Facility Output:

"Maximum Facility Output" shall mean the maximum (not nominal) net electrical power output in megawatts, specified in the Interconnection Service Agreement, after supply of any parasitic or host facility loads, that a Generation Interconnection Customer's Customer Facility is expected to produce, provided that the specified Maximum Facility Output shall not exceed the output of the proposed Customer Facility that Transmission Provider utilized in the System Impact Study.

Maximum Generation Emergency:

"Maximum Generation Emergency" shall mean an Emergency declared by the Office of the Interconnection to address either a generation or transmission emergency in which the Office of the Interconnection anticipates requesting one or more Generation Capacity Resources, or Non-Retail Behind The Meter Generation resources to operate at its maximum net or gross electrical power output, subject to the equipment stress limits for such Generation Capacity Resource or Non-Retail Behind The Meter resource in order to manage, alleviate, or end the Emergency.

Maximum Generation Emergency Alert:

"Maximum Generation Emergency Alert" shall mean an alert issued by the Office of the Interconnection to notify PJM Members, Transmission Owners, resource owners and operators, customers, and regulators that a Maximum Generation Emergency may be declared, for any Operating Day in either, as applicable, the Day-ahead Energy Market or the Real-time Energy Market, for all or any part of such Operating Day.

Member:

"Member" shall have the meaning provided in the Operating Agreement.

Merchant A.C. Transmission Facilities:

"Merchant A.C. Transmission Facility" shall mean Merchant Transmission Facilities that are alternating current (A.C.) transmission facilities, other than those that are Controllable A.C. Merchant Transmission Facilities.

Merchant D.C. Transmission Facilities:

"Merchant D.C. Transmission Facilities" shall mean direct current (D.C.) transmission facilities that are interconnected with the Transmission System pursuant to Tariff, Part IV and Part VI.

Merchant Network Upgrades:

"Merchant Network Upgrades" shall mean additions to, or modifications or replacements of, physical facilities of the Interconnected Transmission Owner that, on the date of the pertinent Transmission Interconnection Customer's Upgrade Request, are part of the Transmission System or are included in the Regional Transmission Expansion Plan.

Merchant Transmission Facilities:

"Merchant Transmission Facilities" shall mean A.C. or D.C. transmission facilities that are interconnected with or added to the Transmission System pursuant to Tariff, Part IV and Part VI and that are so identified on Attachment T to the Tariff, provided, however, that Merchant Transmission Facilities shall not include (i) any Customer Interconnection Facilities, (ii) any physical facilities of the Transmission System that were in existence on or before March 20, 2003 ; (iii) any expansions or enhancements of the Transmission System that are not identified as Merchant Transmission Facilities in the Regional Transmission Expansion Plan and Attachment T to the Tariff, or (iv) any transmission facilities that are included in the rate base of a public utility and on which a regulated return is earned.

Merchant Transmission Provider:

"Merchant Transmission Provider" shall mean an Interconnection Customer that (1) owns, controls, or controls the rights to use the transmission capability of, Merchant D.C. Transmission Facilities and/or Controllable A.C. Merchant Transmission Facilities that connect the Transmission System with another control area, (2) has elected to receive Transmission Injection Rights and Transmission Withdrawal Rights associated with such facility pursuant to Section 36 of the Tariff, and (3) makes (or will make) the transmission capability of such facilities available for use by third parties under terms and conditions approved by the Commission and stated in the Tariff, consistent with Tariff, section 38.

Metering Equipment:

"Metering Equipment" shall mean all metering equipment installed at the metering points designated in the appropriate appendix to an Interconnection Service Agreement.

Minimum Annual Resource Requirement:

"Minimum Annual Resource Requirement" shall mean, for Delivery Years through May 31, 2017, the minimum amount of capacity that PJM will seek to procure from Annual Resources for the PJM Region and for each Locational Deliverability Area for which the Office of the Interconnection is required under Tariff, Attachment DD, section 5.10(a) to establish a separate VRR Curve for such Delivery Year. For the PJM Region, the Minimum Annual Resource Requirement shall be equal to the RTO Reliability Requirement minus [the Sub-Annual Resource Reliability Target for the RTO in Unforced Capacity]. For an LDA, the Minimum Annual Resource Requirement shall be equal to the LDA Reliability Requirement minus [the LDA CETL] minus [the Sub-Annual Resource Reliability Target for such LDA in Unforced

Capacity]. The LDA CETL may be adjusted pro rata for the amount of load served under the FRR Alternative.

Minimum Extended Summer Resource Requirement:

"Minimum Extended Summer Resource Requirement" shall mean, for Delivery Years through May 31, 2017, the minimum amount of capacity that PJM will seek to procure from Extended Summer Demand Resources and Annual Resources for the PJM Region and for each Locational Deliverability Area for which the Office of the Interconnection is required under Tariff, Attachment DD, section 5.10(a) to establish a separate VRR Curve for such Delivery Year. For the PJM Region, the Minimum Extended Summer Resource Requirement shall be equal to the RTO Reliability Requirement minus [the Limited Demand Resource Reliability Target for the PJM Region in Unforced Capacity]. For an LDA, the Minimum Extended Summer Resource Requirement shall be equal to the LDA Reliability Requirement minus [the LDA CETL] minus [the Limited Demand Resource Reliability Target for such LDA in Unforced Capacity]. The LDA CETL may be adjusted pro rata for the amount of load served under the FRR Alternative.

Minimum Generation Emergency:

"Minimum Generation Emergency" shall mean an Emergency declared by the Office of the Interconnection in which the Office of the Interconnection anticipates requesting one or more generating resources to operate at or below Normal Minimum Generation, in order to manage, alleviate, or end the Emergency.

Minimum Participation Requirements:

"Minimum Participation Requirements" shall mean a set of minimum training, risk management, communication and capital or collateral requirements required for Participants in the PJM markets, as set forth herein and in the Form of Annual Certification set forth as Tariff, Attachment Q, Appendix 1. Participants transacting in FTRs in certain circumstances will be required to demonstrate additional risk management procedures and controls as further set forth in the Annual Certification found in Tariff, Attachment Q, Appendix 1.

MISO:

"MISO" shall mean the Midcontinent Independent System Operator, Inc. or any successor thereto.

Multi-Driver Project:

"Multi-Driver Project" shall have the same meaning provided in the Operating Agreement.

Native Load Customers:

"Native Load Customers" shall mean the wholesale and retail power customers of a Transmission Owner on whose behalf the Transmission Owner, by statute, franchise, regulatory

requirement, or contract, has undertaken an obligation to construct and operate the Transmission Owner's system to meet the reliable electric needs of such customers.

NERC:

"NERC" shall mean the North American Electric Reliability Corporation or any successor thereto.

NERC Interchange Distribution Calculator:

"NERC Interchange Distribution Calculator" shall mean the NERC mechanism that is in effect and being used to calculate the distribution of energy, over specific transmission interfaces, from energy transactions.

Net Benefits Test:

"Net Benefits Test" shall mean a calculation to determine whether the benefits of a reduction in price resulting from the dispatch of Economic Load Response exceeds the cost to other loads resulting from the billing unit effects of the load reduction, as specified in Operating Agreement, Schedule 1, section 3.3A.4 and the parallel provisions of Tariff, Attachment K-Appendix, section 3.3A.4.

Net Cost of New Entry:

"Net Cost of New Entry" shall mean the Cost of New Entry minus the Net Energy and Ancillary Service Revenue Offset.

Net Obligation:

"Net Obligation" shall mean the amount owed to PJMSettlement and PJM for purchases from the PJM Markets, Transmission Service, (under Tariff, Parts Part II and III , and other services pursuant to the Agreements, after applying a deduction for amounts owed to a Participant by PJMSettlement as it pertains to monthly market activity and services. Should other markets be formed such that Participants may incur future Obligations in those markets, then the aggregate amount of those Obligations will also be added to the Net Obligation.

Net Sell Position:

"Net Sell Position" shall mean the amount of Net Obligation when Net Obligation is negative.

Network Customer:

"Network Customer" shall mean an entity receiving transmission service pursuant to the terms of the Transmission Provider's Network Integration Transmission Service under Tariff, Part III.

Network Integration Transmission Service:

"Network Integration Transmission Service" shall mean the transmission service provided under Tariff, Part III.

Network Load:

"Network Load" shall mean the load that a Network Customer designates for Network Integration Transmission Service under Tariff, Part III. The Network Customer's Network Load shall include all load (including losses) served by the output of any Network Resources designated by the Network Customer. A Network Customer may elect to designate less than its total load as Network Load but may not designate only part of the load at a discrete Point of Delivery. Where an Eligible Customer has elected not to designate a particular load at discrete points of delivery as Network Load, the Eligible Customer is responsible for making separate arrangements under Tariff, Part II for any Point-To-Point Transmission Service that may be necessary for such non-designated load.

Network Operating Agreement:

"Network Operating Agreement" shall mean an executed agreement that contains the terms and conditions under which the Network Customer shall operate its facilities and the technical and operational matters associated with the implementation of Network Integration Transmission Service under Tariff, Part III.

Network Operating Committee:

"Network Operating Committee" shall mean a group made up of representatives from the Network Customer(s) and the Transmission Provider established to coordinate operating criteria and other technical considerations required for implementation of Network Integration Transmission Service under Tariff, Part III.

Network Resource:

"Network Resource" shall mean any designated generating resource owned, purchased, or leased by a Network Customer under the Network Integration Transmission Service Tariff. Network Resources do not include any resource, or any portion thereof, that is committed for sale to third parties or otherwise cannot be called upon to meet the Network Customer's Network Load on a non-interruptible basis, except for purposes of fulfilling obligations under a reserve sharing program.

Network Service User:

"Network Service User" shall mean an entity using Network Transmission Service.

Network Transmission Service:

"Network Transmission Service" shall mean transmission service provided pursuant to the rates,

terms and conditions set forth in Tariff, Part III, or transmission service comparable to such service that is provided to a Load Serving Entity that is also a Transmission Owner.

Network Upgrades:

"Network Upgrades" shall mean modifications or additions to transmission-related facilities that are integrated with and support the Transmission Provider's overall Transmission System for the general benefit of all users of such Transmission System. Network Upgrades shall include:

(i) **Direct Connection Network Upgrades** which are Network Upgrades that only serve the Customer Interconnection Facility and have no impact or potential impact on the Transmission System until the final tie-in is complete; and

(ii) **Non-Direct Connection Network Upgrades** which are parallel flow Network Upgrades that are not Direct Connection Network Upgrades.

Neutral Party:

"Neutral Party" shall have the meaning provided in Tariff, Part I, section 9.3(v).

New PJM Zone(s):

"New PJM Zone(s)" shall mean the Zone included in the Tariff, along with applicable Schedules and Attachments, for Commonwealth Edison Company, The Dayton Power and Light Company and the AEP East Operating Companies (Appalachian Power Company, Columbus Southern Power Company, Indiana Michigan Power Company, Kentucky Power Company, Kingsport Power Company, Ohio Power Company and Wheeling Power Company).

New Service Customers:

"New Service Customers" shall mean all customers that submit an Interconnection Request, a Completed Application, or an Upgrade Request that is pending in the New Services Queue.

New Service Request:

"New Service Request" shall mean an Interconnection Request, a Completed Application, or an Upgrade Request.

New Services Queue:

"New Service Queue" shall mean all Interconnection Requests, Completed Applications, and Upgrade Requests that are received within each three-month period ending on January 31, April 30, July 31, and October 31 of each year shall collectively comprise a New Services Queue.

New Services Queue Closing Date:

"New Services Queue Closing Date" shall mean each January 31, April 30, July 31, and October 31 shall be the Queue Closing Date for the New Services Queue comprised of Interconnection Requests, Completed Applications, and Upgrade Requests received during the three-month period ending on such date.

New York ISO or NYISO:

"New York ISO" or "NYISO" shall mean the New York Independent System Operator, Inc. or any successor thereto.

Nodal Reference Price:

The "Nodal Reference Price" at each location shall be the 97th percentile price differential between hourly day-ahead and real-time prices experienced over the corresponding two-month reference period in the prior calendar year. In order to capture seasonality effects and maintain a two-month reference period, reference months will be grouped by two, starting with January (e.g., Jan-Feb, Mar-Apr, ... , Jul-Aug, ... Nov-Dec). For any given current-year month, the reference period months will be the set of two months in the prior calendar year that include the month corresponding to the current month. For example, July and August 2003 would each use July-August 2002 as their reference period.

Nominal Rated Capability:

"Nominal Rated Capability" shall mean the nominal maximum rated capability in megawatts of a Transmission Interconnection Customer's Customer Facility or the nominal increase in transmission capability in megawatts of the Transmission System resulting from the interconnection or addition of a Transmission Interconnection Customer's Customer Facility, as determined in accordance with pertinent Applicable Standards and specified in the Interconnection Service Agreement.

Nominated Demand Resource Value:

"Nominated Demand Resource Value" shall mean the amount of load reduction that a Demand Resource commits to provide either through direct load control, firm service level or guaranteed load drop programs. For existing Demand Resources, the maximum Nominated Demand Resource Value is limited, in accordance with the PJM Manuals, to the value appropriate for the method by which the load reduction would be accomplished, at the time the Base Residual Auction or Incremental Auction is being conducted.

Nominated Energy Efficiency Value:

"Nominated Energy Efficiency Value" shall mean the amount of load reduction that an Energy Efficiency Resource commits to provide through installation of more efficient devices or equipment or implementation of more efficient processes or systems.

Non-Firm Point-To-Point Transmission Service:

"Non-Firm Point-To-Point Transmission Service" shall mean Point-To-Point Transmission Service under the Tariff that is reserved and scheduled on an as-available basis and is subject to Curtailment or Interruption as set forth in Tariff, Part II, section 14.7. Non-Firm Point-To-Point Transmission Service is available on a stand-alone basis for periods ranging from one hour to one month.

Non-Firm Sale:

"Non-Firm Sale" shall mean an energy sale for which receipt or delivery may be interrupted for any reason or no reason, without liability on the part of either the buyer or seller.

Non-Firm Transmission Withdrawal Rights:

"No-Firm Transmission Withdrawal Rights" shall mean the rights to schedule energy withdrawals from a specified point on the Transmission System. Non-Firm Transmission Withdrawal Rights may be awarded only to a Merchant D.C. Transmission Facility that connects the Transmission System to another control area. Withdrawals scheduled using Non-Firm Transmission Withdrawal Rights have rights similar to those under Non-Firm Point-to-Point Transmission Service.

Nonincumbent Developer:

"Nonincumbent Developer" shall have the same meaning provided in the Operating Agreement.

Non-Regulatory Opportunity Cost:

"Non-Regulatory Opportunity Cost" shall mean the difference between (a) the forecasted cost to operate a specific generating unit when the unit only has a limited number of starts or available run hours resulting from (i) the physical equipment limitations of the unit, for up to one year, due to original equipment manufacturer recommendations or insurance carrier restrictions, (ii) a fuel supply limitation, for up to one year, resulting from an event of Catastrophic Force Majeure; and, (b) the forecasted future hourly Locational Marginal Price at which the generating unit could run while not violating such limitations. Non-Regulatory Opportunity Cost therefore is the value associated with a specific generating unit's lost opportunity to produce energy during a higher valued period of time occurring within the same period of time in which the unit is bound by the referenced restrictions, and is reflected in the rules set forth in PJM Manual 15. Non-Regulatory Opportunity Costs shall be limited to those resources which are specifically delineated in Schedule 2 of the Operating Agreement.

Non-Retail Behind The Meter Generation:

"Non-Retail Behind The Meter Generation" shall mean Behind the Meter Generation that is used by municipal electric systems, electric cooperatives, or electric distribution companies to serve load.

Non-Synchronized Reserve:

"Non-Synchronized Reserve" shall mean the reserve capability of non-emergency generation resources that can be converted fully into energy within ten minutes of a request from the Office of the Interconnection dispatcher, and is provided by equipment that is not electrically synchronized to the Transmission System.

Non-Synchronized Reserve Event:

"Non-Synchronized Reserve Event" shall mean a request from the Office of the Interconnection to generation resources able and assigned to provide Non-Synchronized Reserve in one or more specified Reserve Zones or Reserve Sub-zones, within ten minutes to increase the energy output by the amount of assigned Non-Synchronized Reserve capability.

Non-Variable Loads:

"Non-Variable Loads" shall have the meaning specified in Operating Agreement, Schedule 1, section 1.5A.6, and the parallel provisions of Tariff, Attachment K-Appendix.

Non-Zone Network Load:

"Non-Zone Network Load shall mean Network Load that is located outside of the PJM Region.

Normal Maximum Generation:

"Normal Maximum Generation" shall mean the highest output level of a generating resource under normal operating conditions.

Normal Minimum Generation:

"Normal Minimum Generation" shall mean the lowest output level of a generating resource under normal operating conditions.

Obligation:

"Obligation" shall mean all amounts owed to PJMSettlement for purchases from the PJM Markets, Transmission Service, (under both Tariff, Part II and Part III), and other services or obligations pursuant to the Agreements. In addition, aggregate amounts that will be owed to PJMSettlement in the future for Capacity purchases within the PJM Capacity markets will be added to this figure. Should other markets be formed such that Participants may incur future Obligations in those markets, then the aggregate amount of those Obligations will also be added to the Net Obligation.

Offer Data:

"Offer Data" shall mean the scheduling, operations planning, dispatch, new resource, and other data and information necessary to schedule and dispatch generation resources and Demand Resource(s) for the provision of energy and other services and the maintenance of the reliability

and security of the Transmission System in the PJM Region, and specified for submission to the PJM Interchange Energy Market for such purposes by the Office of the Interconnection.

Office of the Interconnection:

"Office of the Interconnection" shall mean the employees and agents of PJM Interconnection, L.L.C. subject to the supervision and oversight of the PJM Board, acting pursuant to the Operating Agreement.

Office of the Interconnection Control Center:

"Office of the Interconnection Control Center" shall mean the equipment, facilities and personnel used by the Office of the Interconnection to coordinate and direct the operation of the PJM Region and to administer the PJM Interchange Energy Market, including facilities and equipment used to communicate and coordinate with the Market Participants in connection with transactions in the PJM Interchange Energy Market or the operation of the PJM Region.

On-Site Generators:

"On-Site Generators" shall mean generation facilities (including Behind The Meter Generation) that (i) are not Capacity Resources, (ii) are not injecting into the grid, (iii) are either synchronized or non-synchronized to the Transmission System, and (iv) can be used to reduce demand for the purpose of participating in the PJM Interchange Energy Market.

Open Access Same-Time Information System (OASIS):

"Open Access Same-Time Information System" or "OASIS" shall mean the information system and standards of conduct contained in Part 37 and Part 38 of the Commission's regulations and all additional requirements implemented by subsequent Commission orders dealing with OASIS.

Operating Agreement of the PJM Interconnection, L.L.C. or Operating Agreement:

"Operating Agreement of the PJM Interconnection, L.L.C." or "Operating Agreement" shall mean that agreement dated as of April 1, 1997 and as amended and restated as of June 2, 1997, including all Schedules, Exhibits, Appendices, addenda or supplements hereto, as amended from time to time thereafter, among the Members of the PJM Interconnection, L.L.C.

Operating Day:

"Operating Day" shall mean the daily 24 hour period beginning at midnight for which transactions on the PJM Interchange Energy Market are scheduled.

Operating Margin:

"Operating Margin" shall mean the incremental adjustments, measured in megawatts, required in PJM Region operations in order to accommodate, on a first contingency basis, an operating

contingency in the PJM Region resulting from operations in an interconnected Control Area. Such adjustments may result in constraints causing Transmission Congestion Charges, or may result in Ancillary Services charges pursuant to the PJM Tariff.

Operating Margin Customer:

"Operating Margin Customer" shall mean a Control Area purchasing Operating Margin pursuant to an agreement between such other Control Area and the LLC.

Opportunity Cost:

"Opportunity Cost" shall mean a component of the Market Seller Offer Cap calculated in accordance with Tariff, Attachment DD, section 6.

OPSI Advisory Committee:

"OPSI Advisory Committee" shall mean the committee established under Tariff, Attachment M, section III.G.

Option to Build:

"Option to Build" shall mean the option of the New Service Customer to build certain Customer-Funded Upgrades, as set forth in, and subject to the terms of, the Construction Service Agreement.

Optional Interconnection Study:

"Optional Interconnection Study" shall mean a sensitivity analysis of an Interconnection Request based on assumptions specified by the Interconnection Customer in the Optional Interconnection Study Agreement.

Optional Interconnection Study Agreement:

"Optional Interconnection Study Agreement" shall mean the form of agreement for preparation of an Optional Interconnection Study, as set forth in Attachment N-3 of the Tariff.

Part I:

"Part I" shall mean the Tariff Definitions and Common Service Provisions contained in sections 1 through 12A.

Part II:

"Part II" shall mean the Tariff sections 13 through 27A pertaining to Point-To-Point Transmission Service in conjunction with the applicable Common Service Provisions of Tariff, Part I and appropriate Schedules and Attachments.

Part III:

"Part III" shall mean the Tariff, sections 28 through 35 pertaining to Network Integration Transmission Service in conjunction with the applicable Common Service Provisions of Tariff, Part I and appropriate Schedules and Attachments.

Part IV:

"Part IV" shall mean the Tariff, sections 36 through 112C pertaining to generation or merchant transmission interconnection to the Transmission System in conjunction with the applicable Common Service Provisions of Tariff, Part I and appropriate Schedules and Attachments.

Part V:

"Part V" shall mean the Tariff, sections 113 through 122 pertaining to the deactivation of generating units in conjunction with the applicable Common Service Provisions of Tariff, Part I and appropriate Schedules and Attachments.

Part VI:

"Part VI" shall mean the Tariff, sections 200 through 237 pertaining to the queuing, study, and agreements relating to New Service Requests, and the rights associated with Customer-Funded Upgrades in conjunction with the applicable Common Service Provisions of Tariff, Part I and appropriate Schedules and Attachments.

Participant:

"Participant" shall mean a Market Participant and/or Transmission Customer and/or Applicant requesting to be an active Market Participant and/or Transmission Customer.

Parties:

"Parties" shall mean the Transmission Provider, as administrator of the Tariff, and the Transmission Customer receiving service under the Tariff. PJMSettlement shall be the Counterparty to Transmission Customers.

Peak-Hour Dispatch:

"Peak-Hour Dispatch" shall mean, for purposes of calculating the Energy and Ancillary Services Revenue Offset under Tariff, Attachment DD, section 5, an assumption, as more fully set forth in the PJM Manuals, that the Reference Resource is committed in the Day-Ahead Energy Market in four distinct blocks of four hours of continuous output for each block from the peak-hour period beginning with the hour ending 0800 EPT through to the hour ending 2300 EPT for any day when the average day-ahead LMP for the area for which the Net Cost of New Entry is being determined is greater than, or equal to, the cost to generate (including the cost for a complete

start and shutdown cycle) for at least two hours during each four-hour block, where such blocks shall be assumed to be committed independently; provided that, if there are not at least two economic hours in any given four-hour block, then the Reference Resource shall be assumed not to be committed for such block; and to the extent not committed in any such block in the Day-Ahead Energy Market under the above conditions based on Day-Ahead LMPs, is dispatched in the Real-Time Energy Market for such block if the Real-Time LMP is greater than or equal to the cost to generate under the same conditions as described above for the Day-Ahead Energy Market.

Peak Market Activity:
"Peak Market Activity" shall mean a measure of exposure for which credit is required, involving peak exposures in rolling three-week periods over a year timeframe, with two semi-annual reset points, pursuant to provisions of Tariff, Attachment Q, section II.D.

Peak Season:

"Peak Season" shall mean the weeks containing the 24th through 36th Wednesdays of the calendar year. Each such week shall begin on a Monday and end on the following Sunday, except for the week containing the 36th Wednesday, which shall end on the following Friday.

Percentage Internal Resources Required:

"Percentage Internal Resources Required" shall have the meaning specified in the Reliability Assurance Agreement.

Performance Assessment Hour:

"Performance Assessment Hour" shall mean each whole or partial clock-hour for which an Emergency Action has been declared by the Office of the Interconnection, provided, however, that Performance Assessment Hours for a Base Capacity Resource shall not include any hours outside the calendar months of June through September.

PJM:

"PJM" shall mean PJM Interconnection, L.L.C., including the Office of the Interconnection as referenced in the PJM Operating Agreement.

PJM Administrative Service:

"PJM Administrative Service" shall mean the services provided by PJM pursuant to Tariff, Schedule 9.

PJM Board:

"PJM Board" shall mean the Board of Managers of the LLC, except when such term is being used in Attachment M of the Tariff, in which case PJM Board shall mean the Board of Managers

of PJM or its designated representative, exclusive of any members of PJM Management.

PJM Control Area:

"PJM Control Area" shall mean the Control Area that is recognized by NERC as the PJM Control Area.

PJM Entities:

"PJM Entities" shall mean PJM, including the Market Monitoring Unit, the PJM Board, and PJM's officers, employees, representatives, advisors, contractors, and consultants.

PJM Interchange:

"PJM Interchange" shall mean the following, as determined in accordance with the Schedules to the Tariff: (a) for a Market Participant that is a Network Service User, the amount by which its hourly Equivalent Load exceeds, or is exceeded by, the sum of the hourly outputs of its operating generating resources; or (b) for a Market Participant that is not a Network Service User, the amount of its Spot Market Backup; or (c) the hourly scheduled deliveries of Spot Market Energy by a Market Seller from an External Resource; or (d) the hourly net metered output of any other Market Seller; or (e) the hourly scheduled deliveries of Spot Market Energy to an External Market Buyer; or (f) the hourly scheduled deliveries to an Internal Market Buyer that is not a Network Service User.

PJM Interchange Energy Market:

"PJM Interchange Energy Market" shall mean the regional competitive market administered by the Transmission Provider for the purchase and sale of spot electric energy at wholesale interstate commerce and related services, as more fully set forth in Operating Agreement, Schedule 1, and the parallel provisions of Tariff, Attachment K - Appendix.

PJM Interchange Export:

"PJM Interchange Export" shall mean the following, as determined in accordance with the Schedules to the Tariff: (a) for a Market Participant that is a Network Service User, the amount by which its hourly Equivalent Load is exceeded by the sum of the hourly outputs of its operating generating resources; or (b) for a Market Participant that is not a Network Service User, the amount of its Spot Market Backup sales; or (c) the hourly scheduled deliveries of Spot Market Energy by a Market Seller from an External Resource; or (d) the hourly net metered output of any other Market Seller.

PJM Interchange Import:

"PJM Interchange Import" shall mean the following, as determined in accordance with the Schedules to the Tariff: (a) for a Market Participant that is a Network Service User, the amount by which its hourly Equivalent Load exceeds the sum of the hourly outputs of its operating

generating resources; or (b) for a Market Participant that is not a Network Service User, the amount of its Spot Market Backup purchases; or (c) the hourly scheduled deliveries of Spot Market Energy to an External Market Buyer; or (d) the hourly scheduled deliveries to an Internal Market Buyer that is not a Network Service User.

PJM Liaison:

"PJM Liaison" shall mean the liaison established under Tariff, Attachment M, section III.I.

PJM Management:

"PJM Management" shall mean the officers, executives, supervisors and employee managers of PJM.

PJM Manuals:

"PJM Manuals" shall mean the instructions, rules, procedures and guidelines established by the Office of the Interconnection for the operation, planning, and accounting requirements of the PJM Region and the PJM Interchange Energy Market.

PJM Markets:

"PJM Markets" shall mean the PJM Interchange Energy and capacity markets, including the RPM auctions, together with all bilateral or other wholesale electric power and energy transactions, capacity transactions, ancillary services transactions (including black start service), transmission transactions and any other market operated under the PJM Tariff or Operating Agreement within the PJM Region, wherein Participants may incur Obligations to PJMSettlement.

PJM Market Rules:

"PJM Market Rules" shall mean the rules, standards, procedures, and practices of the PJM Markets set forth in the PJM Tariff, the PJM Operating Agreement, the PJM Reliability Assurance Agreement, the PJM Consolidated Transmission Owners Agreement, the PJM Manuals, the PJM Regional Practices Document, the PJM-Midwest Independent Transmission System Operator Joint Operating Agreement or any other document setting forth market rules.

PJM Net Assets:

"PJM Net Assets" shall mean the total assets per PJM's consolidated quarterly or year-end financial statements most recently issued as of the date of the receipt of written notice of a claim less amounts for which PJM is acting as a temporary custodian on behalf of its Members, transmission developers/Designated Entities, and generation developers, including, but not limited to, cash deposits related to credit requirement compliance, study and/or interconnection receivables, member prepayments, invoiced amounts collected from Net Buyers but have not yet been paid to Net Sellers, and excess congestion (as described in Operating Agreement,

Schedule 1, section 5.2.6, and the parallel provisions of Tariff, Attachment K-Appendix).

PJM Open Access Transmission Tariff ("O.A.T.T."):

"PJM Open Access Transmission Tariff" or "O.A.T.T" shall mean the Open Access Transmission Tariff of PJM Interconnection, L.L.C., on file with the Federal Energy Regulatory Commission, and as revised from time to time.

PJM Open Access Same-time Information System:

"PJM Open Access Same-time Information System" shall mean the electronic communication system for the collection and dissemination of information about transmission services in the PJM Region, established and operated by the Office of the Interconnection in accordance with FERC standards and requirements.

PJM Operating Agreement:

"PJM Operating Agreement" shall mean the Amended and Restated Operating Agreement of PJM on file with the Commission.

PJM Region:

"PJM Region" shall have the meaning specified in the Operating Agreement.

PJM Regional Practices Document:
"PJM Regional Practices Document" shall mean the document of that title that compiles and describes the practices in the PJM Markets and that is made available in hard copy and on the Internet.

PJM Region Installed Reserve Margin:

"PJM Region Installed Reserve Margin" shall have the meaning specified in the Operating Agreement.

PJM Region Peak Load Forecast:

"PJM Region Peak Load Forecast" shall mean the peak load forecast used by the Office of the Interconnection in determining the PJM Region Reliability Requirement, and shall be determined on both a preliminary and final basis as set forth in Tariff, Attachment DD, section 5.

PJM Region Reliability Requirement:

"PJM Region Reliability Requirement" shall mean, for purposes of the Base Residual Auction, the Forecast Pool Requirement multiplied by the Preliminary PJM Region Peak Load Forecast, less the sum of all Preliminary Unforced Capacity Obligations of FRR Entities in the PJM

Region; and, for purposes of the Incremental Auctions, the Forecast Pool Requirement multiplied by the updated PJM Region Peak Load Forecast, less the sum of all updated Unforced Capacity Obligations of FRR Entities in the PJM Region.

PJM Reliability Assurance Agreement:

"PJM Reliability Assurance Agreement" shall mean the Reliability Assurance Agreement among Load Serving Entities in the PJM Region on file with the Commission.

PJMSettlement:

"PJM Settlement" or "PJM Settlement, Inc." shall mean PJM Settlement, Inc. (or its successor), established by PJM as set forth in Section 3.3 of the Operating Agreement.

PJM Tariff:

"PJM Tariff" or "Tariff shall mean that certain "PJM Open Access Transmission Tariff", including any schedules, appendices or exhibits attached thereto, on file with FERC and as amended from time to time thereafter.

PJM Transmission Owners Agreement:

"PJM Transmission Owners Agreement" shall mean the PJM Consolidated Transmission Owners Agreement on file with the Commission.

Plan:

"Plan" shall mean the PJM market monitoring plan set forth in Tariff, Attachment M.

Planned Demand Resource:

"Planned Demand Resource" shall have the meaning specified in the Reliability Assurance Agreement.

Planned External Financed Generation Capacity Resource:

"Planned External Financed Generation Capacity Resource" shall mean a Planned External Generation Capacity Resource that, prior to August 7, 2015, has an effective agreement that is the equivalent of an Interconnection Service Agreement, has submitted to the Office of the Interconnection the appropriate certification attesting achievement of Financial Close, and has secured at least 50 percent of the MWs of firm transmission service required to qualify such resource under the deliverability requirements of the Reliability Assurance Agreement.

Planned External Generation Capacity Resource:

"Planned External Generation Capacity Resource" shall have the meaning specified in the

Reliability Assurance Agreement.

Planned Financed Generation Capacity Resource:

"Planned Financed Generation Capacity Resource" shall mean a Planned Generation Capacity Resource that, prior to August 7, 2015, has an effective Interconnection Service Agreement and has submitted to the Office of the Interconnection the appropriate certification attesting achievement of Financial Close.

Planned Generation Capacity Resource:

"Planned Generation Capacity Resource" shall have the meaning specified in the Reliability Assurance Agreement.

Planning Period:

"Planning Period" shall have the meaning specified in the Reliability Assurance Agreement.

Planning Period Balance:

"Planning Period Balance" shall mean the entire period of time remaining in the Planning Period following the month that a monthly auction is conducted.

Planning Period Quarter:

"Planning Period Quarter" shall mean any of the following three month periods in the Planning Period: June, July and August; September, October and November; December, January and February; or March, April and May.

Point(s) of Delivery:

"Point(s) of Delivery" shall mean the point(s) on the Transmission Provider's Transmission System where capacity and energy transmitted by the Transmission Provider will be made available to the Receiving Party under Tariff, Part II. The Point(s) of Delivery shall be specified in the Service Agreement for Long-Term Firm Point-To-Point Transmission Service.

Point of Interconnection:

"Point of Interconnection" shall mean the point or points, shown in the appropriate appendix to the Interconnection Service Agreement and the Interconnection Construction Service Agreement, where the Customer Interconnection Facilities interconnect with the Transmission Owner Interconnection Facilities or the Transmission System.

Point(s) of Receipt:

"Point(s) of Receipt" shall mean point(s) of interconnection on the Transmission Provider's

Transmission System where capacity and energy will be made available to the Transmission Provider by the Delivering Party under Tariff, Part II. The Point(s) of Receipt shall be specified in the Service Agreement for Long-Term Firm Point-To-Point Transmission Service.

Point-To-Point Transmission Service:

"Point-To-Point Transmission Service shall mean the reservation and transmission of capacity and energy on either a firm or non-firm basis from the Point(s) of Receipt to the Point(s) of Delivery under Tariff, Part II.

Power Purchaser:

"Power Purchaser" shall mean the entity that is purchasing the capacity and energy to be transmitted under the Tariff.

PRD Curve:

"PRD Curve" shall have the meaning provided in the Reliability Assurance Agreement.

PRD Provider:

"PRD Provider" shall have the meaning provided in the Reliability Assurance Agreement.

PRD Reservation Price:

"PRD Reservation" Price shall have the meaning provided in the Reliability Assurance Agreement.

PRD Substation:

"PRD Substation" shall have the meaning provided in the Reliability Assurance Agreement.

Pre-Confirmed Application:

"Pre-Confirmed Application" shall be an Application that commits the Eligible Customer to execute a Service Agreement upon receipt of notification that the Transmission Provider can provide the requested Transmission Service.

Pre-Emergency Load Response Program:

"Pre-Emergency Load Response Program" shall be the program by which Curtailment Service Providers may be compensated by PJM for Demand Resources that will reduce load when dispatched by PJM during pre-emergency conditions, and is described in Section 8 of Schedule 1 of the Operating Agreement and the parallel provisions of Section 8 of Attachment K-Appendix of the Tariff.

Pre-Expansion PJM Zones:

"Pre-Expansion PJM Zones" shall be zones included in the Tariff, along with applicable Schedules and Attachments, for certain Transmission Owners - Atlantic City Electric Company, Baltimore Gas and Electric Company, Delmarva Power and Light Company, Jersey Central Power and Light Company, Metropolitan Edison Company, PECO Energy Company, Pennsylvania Electric Company, Pennsylvania Power & Light Group, Potomac Electric Power Company, Public Service Electric and Gas Company, Allegheny Power, and Rockland Electric Company.

Price Responsive Demand:

"Price Responsive Demand" shall have the meaning provided in the Reliability Assurance Agreement.

Primary Reserve:

"Primary Reserve" shall mean the total reserve capability of generation resources that can be converted fully into energy or Demand Resources whose demand can be reduced within ten minutes of a request from the Office of the Interconnection dispatcher, and is comprised of both Synchronized Reserve and Non-Synchronized Reserve.

Primary Reserve Requirement:

"Primary Reserve Requirement" shall mean the megawatts required to be maintained in a Reserve Zone or Reserve Sub-zone as Primary Reserve, absent any increase to account for additional reserves scheduled to address operational uncertainty. The Primary Reserve Requirement is calculated in accordance with the PJM Manuals.

Project Financing:

"Project Financing" shall mean: (a) one or more loans, leases, equity and/or debt financings, together with all modifications, renewals, supplements, substitutions and replacements thereof, the proceeds of which are used to finance or refinance the costs of the Customer Facility, any alteration, expansion or improvement to the Customer Facility, the purchase and sale of the Customer Facility or the operation of the Customer Facility; (b) a power purchase agreement pursuant to which Interconnection Customer's obligations are secured by a mortgage or other lien on the Customer Facility; or (c) loans and/or debt issues secured by the Customer Facility.

Project Finance Entity:

"Project Finance Entity" shall mean: (a) a holder, trustee or agent for holders, of any component of Project Financing; or (b) any purchaser of capacity and/or energy produced by the Customer Facility to which Interconnection Customer has granted a mortgage or other lien as security for some or all of Interconnection Customer's obligations under the corresponding power purchase agreement.

Projected PJM Market Revenues:

"Projected PJM Market Revenues" shall mean a component of the Market Seller Offer Cap calculated in accordance with Tariff, Attachment DD, section 6.

Proportional Multi-Driver Project:

"Proportional Multi-Driver Project" shall have the same meaning provided in the Operating Agreement.

Pseudo-Tie:

"Pseudo-Tie" shall have the same meaning provided in the Operating Agreement.

Public Policy Objectives:

"Public Policy Objectives" shall have the same meaning provided in the Operating Agreement.

Public Policy Requirements:

"Public Policy Requirements" shall have the same meaning provided in the Operating Agreement.

Qualifying Transmission Upgrade:

"Qualifying Transmission Upgrade" shall mean a proposed enhancement or addition to the Transmission System that: (a) will increase the Capacity Emergency Transfer Limit into an LDA by a megawatt quantity certified by the Office of the Interconnection; (b) the Office of the Interconnection has determined will be in service on or before the commencement of the first Delivery Year for which such upgrade is the subject of a Sell Offer in the Base Residual Auction; (c) is the subject of a Facilities Study Agreement executed before the conduct of the Base Residual Auction for such Delivery Year and (d) a New Service Customer is obligated to fund through a rate or charge specific to such facility or upgrade.

Queue Position:

"Queue Position" shall mean the priority assigned to an Interconnection Request, a Completed Application, or an Upgrade Request pursuant to applicable provisions of Tariff, Part VI.

Ramping Capability:

"Ramping Capability" shall mean the sustained rate of change of generator output, in megawatts per minute.

Real-time Congestion Price:

"Real-time Congestion Price" shall mean the Congestion Price resulting from the Office of the Interconnection's dispatch of the PJM Interchange Energy Market in the Operating Day.

Real-time Loss Price:

"Real-time Loss Price" shall mean the Loss Price resulting from the Office of the Interconnection's dispatch of the PJM Interchange Energy Market in the Operating Day.

Real-time Energy Market:

"Real-time Energy Market" shall mean the purchase or sale of energy and payment of Transmission Congestion Charges for quantity deviations from the Day-ahead Energy Market in the Operating Day.

Real-time Prices:

"Real-time Prices" shall mean the Locational Marginal Prices resulting from the Office of the Interconnection's dispatch of the PJM Interchange Energy Market in the Operating Day.

Real-time System Energy Price:

"Real-time System Energy Price" shall mean the System Energy Price resulting from the Office of the Interconnection's dispatch of the PJM Interchange Energy Market in the Operating Day.

Reasonable Efforts:

"Reasonable Efforts" shall mean, with respect to any action required to be made, attempted, or taken by an Interconnection Party or by a Construction Party under Tariff, Part IV or Part VI, an Interconnection Service Agreement, or a Construction Service Agreement, such efforts as are timely and consistent with Good Utility Practice and with efforts that such party would undertake for the protection of its own interests.

Receiving Party:

"Receiving Party" shall mean the entity receiving the capacity and energy transmitted by the Transmission Provider to Point(s) of Delivery.

Referral:

"Referral" shall mean a formal report of the Market Monitoring Unit to the Commission for investigation of behavior of a Market Participant, of behavior of PJM, or of a market design flaw, pursuant to Tariff, Attachment M, section IV.I.

Reference Resource:

"Reference Resource" shall mean a combustion turbine generating station, configured with two General Electric Frame 7FA turbines with inlet air cooling to 50 degrees, Selective Catalytic Reduction technology all CONE Areas, dual fuel capability, and a heat rate of 10.096 Mmbtu/ MWh.

Regional Entity:

"Regional Entity" shall have the same meaning specified in the Operating Agreement.

Regional Transmission Expansion Plan:

"Regional Transmission Expansion Plan" shall mean the plan prepared by the Office of the Interconnection pursuant to Schedule 6 of the Operating Agreement for the enhancement and expansion of the Transmission System in order to meet the demands for firm transmission service in the PJM Region.

Regional Transmission Group (RTG):

"Regional Transmission Group" or "RTG" shall mean a voluntary organization of transmission owners, transmission users and other entities approved by the Commission to efficiently coordinate transmission planning (and expansion), operation and use on a regional (and interregional) basis.

Regulation:

"Regulation" shall mean the capability of a specific generation resource or Demand Resource with appropriate telecommunications, control and response capability to seperately increase and decrease its output or adjust load in response to a regulating control signal, in accordance with the specifications in the PJM Manuals.

Regulation Zone:

"Regulation Zone" shall mean any of those one or more geographic areas, each consisting of a combination of one or more Control Zone(s) as designated by the Office of the Interconnection in the PJM Manuals, relevant to provision of, and requirements for, regulation service.

Relevant Electric Retail Regulatory Authority:

"Relevant Electric Retail Regulatory Authority" shall mean an entity that has jurisdiction over and establishes prices and policies for competition for providers of retail electric service to end-customers, such as the city council for a municipal utility, the governing board of a cooperative utility, the state public utility commission or any other such entity.

Reliability Assurance Agreement:

"Reliability Assurance Agreement" shall mean that certain Reliability Assurance Agreement

Among Load Serving Entities in the PJM Region, on file with FERC as PJM Interconnection L.L.C. Rate Schedule FERC No. 44, and as amended from time to time thereafter.

Reliability Pricing Model Auction:

"Reliability Pricing Model Auction" or "RPM Auction" shall mean the Base Residual Auction or any Incremental Auction, or, for the 2016/2017 and 2017/2018 Delivery Years, any Capacity Performance Transition Incremental Auction.

Repowered / Repowering:

"Repowered" or "Repowering" shall refer to a partial or total replacement of existing steam production equipment with new technology or a partial or total replacement of steam production process and power generation equipment, or an addition of steam production and/or power generation equipment, or a change in the primary fuel being used at the plant. A resource can be considered Repowered whether or not such aforementioned replacement, addition, or fuel change provides an increase in installed capacity, and whether or not the pre-existing plant capability is formally deactivated or retired.

Required Transmission Enhancements:

"Regional Transmission Enhancements" shall mean enhancements and expansions of the Transmission System that (1) a Regional Transmission Expansion Plan developed pursuant to Schedule 6 of the Operating Agreement or (2) any joint planning or coordination agreement between PJM and another region or transmission planning authority set forth in Tariff, Schedule 12-Appendix B ("Appendix B Agreement") designates one or more of the Transmission Owner(s) to construct and own or finance. Required Transmission Enhancements shall also include enhancements and expansions of facilities in another region or planning authority that meet the definition of transmission facilities pursuant to FERC's Uniform System of Accounts or have been classified as transmission facilities in a ruling by FERC addressing such facilities constructed pursuant to an Appendix B Agreement cost responsibility for which has been assigned at least in part to PJM pursuant to such Appendix B Agreement.

Reserved Capacity:

"Reserved Capacity" shall mean the maximum amount of capacity and energy that the Transmission Provider agrees to transmit for the Transmission Customer over the Transmission Provider's Transmission System between the Point(s) of Receipt and the Point(s) of Delivery under Tariff, Part II. Reserved Capacity shall be expressed in terms of whole megawatts on a sixty (60) minute interval (commencing on the clock hour) basis.

Reserve Penalty Factor:

"Reserve Penalty Factor" shall mean the cost, in $/MWh, associated with being unable to meet a specific reserve requirement in a Reserve Zone or Reserve Sub-zone. A Reserve Penalty Factor will be defined for each reserve requirement in a Reserve Zone or Reserve Sub-zone.

Reserve Sub-zone:

"Reserve Sub-zone" shall mean any of those geographic areas wholly contained within a Reserve Zone, consisting of a combination of a portion of one or more Control Zone(s) as designated by the Office of the Interconnection in the PJM Manuals, relevant to provision of, and requirements for, reserve service.

Reserve Zone:

"Reserve Zone" shall mean any of those geographic areas consisting of a combination of one or more Control Zone(s), as designated by the Office of the Interconnection in the PJM Manuals, relevant to provision of, and requirements for, reserve service.

Residual Auction Revenue Rights:

"Residual Auction Revenue Rights" shall mean incremental stage 1 Auction Revenue Rights created within a Planning Period by an increase in transmission system capability, including the return to service of existing transmission capability, that was not modeled pursuant to Operating Agreement, Schedule 1, section 7.5 and the parallel provisions of Tariff, Attachment K-Appendix in compliance with Operating Agreement, Schedule 1, section 7.4.2 (h) and the parallel provisions of Tariff, Attachment K-Appendix, and, if modeled, would have increased the amount of stage 1 Auction Revenue Rights allocated pursuant to Operating Agreement, Schedule 1, section 7.4.2 and the parallel provisions of Tariff, Attachment K-Appendix; provided that, the foregoing notwithstanding, Residual Auction Revenue Rights shall exclude: 1) Incremental Auction Revenue Rights allocated pursuant to Tariff, Part VI; and 2) Auction Revenue Rights allocated to entities that are assigned cost responsibility pursuant to Operating Agreement, Schedule 6 for transmission upgrades that create such rights.

Residual Metered Load:

"Residual Metered Load" shall mean all load remaining in an electric distribution company's fully metered franchise area(s) or service territory(ies) after all nodally priced load of entities serving load in such area(s) or territory(ies) has been carved out.

Resource Substitution Charge:

"Resource Substitution Charge" shall mean a charge assessed on Capacity Market Buyers in an Incremental Auction to recover the cost of replacement Capacity Resources.

RPM Seller Credit:

"RPM Seller Credit" shall mean an additional form of Unsecured Credit defined in Tariff, Attachment Q, section IV.

Scheduled Incremental Auctions:

"Scheduled Incremental Auctions" shall refer to the First, Second, or Third Incremental Auction.

Schedule of Work:

"Schedule of Work" shall mean that schedule attached to the Interconnection Construction Service Agreement setting forth the timing of work to be performed by the Constructing Entity pursuant to the Interconnection Construction Service Agreement, based upon the Facilities Study and subject to modification, as required, in accordance with Transmission Provider's scope change process for interconnection projects set forth in the PJM Manuals.

Scope of Work:

"Scope of Work" shall mean that scope of the work attached as a schedule to the Interconnection Construction Service Agreement and to be performed by the Constructing Entity(ies) pursuant to the Interconnection Construction Service Agreement, provided that such Scope of Work may be modified, as required, in accordance with Transmission Provider's scope change process for interconnection projects set forth in the PJM Manuals.

Secondary Systems:

"Secondary Systems" shall mean control or power circuits that operate below 600 volts, AC or DC, including, but not limited to, any hardware, control or protective devices, cables, conductors, electric raceways, secondary equipment panels, transducers, batteries, chargers, and voltage and current transformers.

Second Incremental Auction:

"Second Incremental Auction" shall mean an Incremental Auction conducted ten months before the Delivery Year to which it relates.

Security:

"Security" shall mean the security provided by the New Service Customer pursuant to Section 212.4 or Section 213.4 of the Tariff to secure the New Service Customer's responsibility for Costs under the Interconnection Service Agreement or Upgrade Construction Service Agreement and Section 217 of the Tariff.

Self-Supply:

"Self-Supply" shall mean Capacity Resources secured by a Load-Serving Entity, by ownership or contract, outside a Reliability Pricing Model Auction, and used to meet obligations under this Attachment or the Reliability Assurance Agreement through submission in a Base Residual Auction or an Incremental Auction of a Sell Offer indicating such Market Seller's intent that such Capacity Resource be Self-Supply. Self-Supply may be either committed regardless of clearing price or submitted as a Sell Offer with a price bid. A Load Serving Entity's Sell Offer

with a price bid for an owned or contracted Capacity Resource shall not be deemed "Self-Supply," unless it is designated as Self-Supply and used by the LSE to meet obligations under this Attachment or the Reliability Assurance Agreement.

Sell Offer:

"Sell Offer" shall mean an offer to sell Capacity Resources in a Base Residual Auction, Incremental Auction, or Reliability Backstop Auction.

Service Agreement:

"Service Agreement" shall mean the initial agreement and any amendments or supplements thereto entered into by the Transmission Customer and the Transmission Provider for service under the Tariff.

Service Commencement Date:

"Service Commencement Date" shall mean the date the Transmission Provider begins to provide service pursuant to the terms of an executed Service Agreement, or the date the Transmission Provider begins to provide service in accordance with Section 15.3 or Section 29.1 under the Tariff.

Short-Term Firm Point-To-Point Transmission Service:

"Short-Term Firm Point-To-Point Transmission Service" shall mean Firm Point-To-Point Transmission Service under Tariff, Part II with a term of less than one year.

Short-term Project:

"Short-term Project" shall have the same meaning provided in the Operating Agreement.

Short-Term Resource Procurement Target:

"Short-Term Resource Procurement Target" shall mean, for Delivery Years through May 31, 2018, as to the PJM Region, for purposes of the Base Residual Auction, 2.5% of the PJM Region Reliability Requirement determined for such Base Residual Auction, for purposes of the First Incremental Auction, 2% of the of the PJM Region Reliability Requirement as calculated at the time of the Base Residual Auction; and, for purposes of the Second Incremental Auction, 1.5% of the of the PJM Region Reliability Requirement as calculated at the time of the Base Residual Auction; and, as to any Zone, an allocation of the PJM Region Short-Term Resource Procurement Target based on the Preliminary Zonal Forecast Peak Load, reduced by the amount of load served under the FRR Alternative. For any LDA, the LDA Short-Term Resource Procurement Target shall be the sum of the Short-Term Resource Procurement Targets of all Zones in the LDA.

Short-Term Resource Procurement Target Applicable Share:

"Short-Term Resource Procurement Target Applicable Share" shall mean, for Delivery Years through May 31, 2018: (i) for the PJM Region, as to the First and Second Incremental Auctions, 0.2 times the Short-Term Resource Procurement Target used in the Base Residual Auction and, as to the Third Incremental Auction for the PJM Region, 0.6 times such target; and (ii) for an LDA, as to the First and Second Incremental Auctions, 0.2 times the Short-Term Resource Procurement Target used in the Base Residual Auction for such LDA and, as to the Third Incremental Auction, 0.6 times such target.

Site:

"Site" shall mean all of the real property, including but not limited to any leased real property and easements, on which the Customer Facility is situated and/or on which the Customer Interconnection Facilities are to be located.

Small Commercial Customer:

"Small Commercial Customer," as used in RAA, Schedule 6 and Tariff, Attachment DD-1, shall mean a commercial retail electric end-use customer of an electric distribution company that participates in a mass market demand response program under the jurisdiction of a RERRA and satisfies the definition of a "small commercial customer" under the terms of the applicable RERRA's program, provided that the customer has an annual peak demand no greater than 100kW.

Small Generation Resource:

"Small Generation Resource" shall mean an Interconnection Customer's device of 20 MW or less for the production and/or storage for later injection of electricity identified in an Interconnection Request, but shall not include the Interconnection Customer's Interconnection Facilities. This term shall include Energy Storage Resources and/or other devices for storage for later injection of energy.

Small Inverter Facility:

"Small Inverter Facility" shall mean an Energy Resource that is a certified small inverter-based facility no larger than 10 kW.

Small Inverter ISA:

"Small Inverter ISA" shall mean an agreement among Transmission Provider, Interconnection Customer, and Interconnected Transmission Owner regarding interconnection of a Small Inverter Facility under Tariff, Part IV, section 112B.

Special Member:

"Special Member" shall mean an entity that satisfies the requirements of Operating Agreement,

Schedule 1, section 1.5A.02, and the parallel provisions of Tariff, Attachment K-Appendix, or the special membership provisions established under the Emergency Load Response and Pre-Emergency Load Response Programs.

Spot Market Backup:

"Spot Market Backup" shall mean the purchase of energy from, or the delivery of energy to, the PJM Interchange Energy Market in quantities sufficient to complete the delivery or receipt obligations of a bilateral contract that has been curtailed or interrupted for any reason.

Spot Market Energy:

"Spot Market Energy" shall mean energy bought or sold by Market Participants through the PJM Interchange Energy Market at System Energy Prices determined as specified in Operating Agreement, Schedule 1, section 2, and the parallel provisions of Tariff, Attachment K-Appendix.

State:

"State" shall mean the District of Columbia and any State or Commonwealth of the United States.

State Commission:

"State Commission" shall mean any state regulatory agency having jurisdiction over retail electricity sales in any State in the PJM Region.

State Estimator:

"State Estimator" shall mean the computer model of power flows specified in Operating Agreement, Schedule 1, section 2.3 and the parallel provisions of Tariff, Attachment K-Appendix.

Station Power:

"Station Power" shall mean energy used for operating the electric equipment on the site of a generation facility located in the PJM Region or for the heating, lighting, air-conditioning and office equipment needs of buildings on the site of such a generation facility that are used in the operation, maintenance, or repair of the facility. Station Power does not include any energy (i) used to power synchronous condensers; (ii) used for pumping at a pumped storage facility; (iii) used for compressors at a compressed air energy storage facility; (iv) used for charging an Energy Storage Resource or a Capacity Storage Resource; or (v) used in association with restoration or black start service.

Sub-Annual Resource Constraint:

"Sub-Annual Resource Constraint" shall mean, for the 2017/2018 Delivery Year and for FRR

Capacity Plans the 2017/2018 and 2018/2019 Delivery Years, for the PJM Region or for each LDA for which the Office of the Interconnection is required under section 5.10(a) of Tariff Attachment DD to establish a separate VRR Curve for a Delivery Year, a limit on the total amount of Unforced Capacity that can be committed as Limited Demand Resources and Extended Summer Demand Resources for the 2017/2018 Delivery Year in the PJM Region or in such LDA, calculated as the Sub-Annual Resource Reliability Target for the PJM Region or for such LDA, respectively, minus the Short-Term Resource Procurement Target for the PJM Region or for such LDA, respectively.

Sub-Annual Resource Price Decrement:

"Sub-Annual Resource Price Decrement" shall mean, for the 2017/2018 Delivery Year, a difference between the clearing price for Extended Summer Demand Resources and the clearing price for Annual Resources, representing the cost to procure additional Annual Resources out of merit order when the Sub-Annual Resource Constraint is binding.

Sub-Annual Resource Reliability Target:

"Sub-Annual Reliability Target" for the PJM Region or an LDA, shall mean the maximum amount of the combination of Extended Summer Demand Resources and Limited Demand Resources in Unforced Capacity determined by PJM to be consistent with the maintenance of reliability, stated in Unforced Capacity, that shall be used to calculate the Minimum Annual Resource Requirement for Delivery Years through May 31, 2017 and the Sub-Annual Resource Constraint for the 2017/2018 and 2018/2019 Delivery Years. As more fully set forth in the PJM Manuals, PJM calculates the Sub-Annual Resource Reliability Target, by first determining a reference annual loss of load expectation ("LOLE") assuming no Demand Resources. The calculation for the unconstrained portion of the PJM Region uses a daily distribution of loads under a range of weather scenarios (based on the most recent load forecast and iteratively shifting the load distributions to result in the Installed Reserve Margin established for the Delivery Year in question) and a weekly capacity distribution (based on the cumulative capacity availability distributions developed for the Installed Reserve Margin study for the Delivery Year in question). The calculation for each relevant LDA uses a daily distribution of loads under a range of weather scenarios (based on the most recent load forecast for the Delivery Year in question) and a weekly capacity distribution (based on the cumulative capacity availability distributions developed for the Capacity Emergency Transfer Objective study for the Delivery Year in question). For the relevant LDA calculation, the weekly capacity distributions are adjusted to reflect the Capacity Emergency Transfer Limit for the Delivery Year in question.

For both the PJM Region and LDA analyses, PJM then models the commitment of varying amounts of DR (displacing otherwise committed generation) as interruptible from May 1 through October 31 and unavailable from November 1 through April 30 and calculates the LOLE at each DR level. The Extended Summer DR Reliability Target is the DR amount, stated as a percentage of the unrestricted peak load, that produces no more than a ten percent increase in the LOLE, compared to the reference value. The Sub-Annual Resource Reliability Target shall be expressed as a percentage of the forecasted peak load of the PJM Region or such LDA and is converted to Unforced Capacity by multiplying [the reliability target percentage] times [the

Forecast Pool Requirement] times [the DR Factor] times [the forecasted peak load of the PJM Region or such LDA, reduced by the amount of load served under the FRR Alternative].

Sub-meter:

"Sub-meter" shall mean a metering point for electricity consumption that does not include all electricity consumption for the end-use customer as defined by the electric distribution company account number. PJM shall only accept sub-meter load data from end-use customers for measurement and verification of Regulation service as set forth in the Economic Load Response rules and PJM Manuals.

Switching and Tagging Rules:

"Switching and Tagging Rules" shall mean the switching and tagging procedures of Interconnected Transmission Owners and Interconnection Customer as they may be amended from time to time.

Synchronized Reserve:

"Synchronized Reserve" shall mean the reserve capability of generation resources that can be converted fully into energy or Demand Resources whose demand can be reduced within ten minutes from the request of the Office of the Interconnection dispatcher, and is provided by equipment that is electrically synchronized to the Transmission System.

Synchronized Reserve Event:

"Synchronized Reserve Event" shall mean a request from the Office of the Interconnection to generation resources and/or Demand Resources able, assigned or self-scheduled to provide Synchronized Reserve in one or more specified Reserve Zones or Reserve Sub-zones, within ten minutes, to increase the energy output or reduce load by the amount of assigned or self-scheduled Synchronized Reserve capability.

Synchronized Reserve Requirement:

"Synchronized Reserve Requirement" shall mean the megawatts required to be maintained in a Reserve Zone or Reserve Sub-zone as Synchronized Reserve, absent any increase to account for additional reserves scheduled to address operational uncertainty. The Synchronized Reserve Requirement is calculated in accordance with the PJM Manuals.

System Condition:

"System Condition" shall mean a specified condition on the Transmission Provider's system or on a neighboring system, such as a constrained transmission element or flowgate, that may trigger Curtailment of Long-Term Firm Point-to-Point Transmission Service using the curtailment priority pursuant to Tariff, Part II, section 13.6. Such conditions must be identified in the Transmission Customer's Service Agreement.

System Energy Price:

"System Energy Price" shall mean the energy component of the Locational Marginal Price, which is the price at which the Market Seller has offered to supply an additional increment of energy from a resource, calculated as specified in Operating Agreement, Schedule 1, section 2 and the parallel provisions of Tariff, Attachment K-Appendix.

System Impact Study:

"System Impact Study" shall mean an assessment by the Transmission Provider of (i) the adequacy of the Transmission System to accommodate a Completed Application, an Interconnection Request or an Upgrade Request, (ii) whether any additional costs may be incurred in order to provide such transmission service or to accommodate an Interconnection Request, and (iii) with respect to an Interconnection Request, an estimated date that an Interconnection Customer's Customer Facility can be interconnected with the Transmission System and an estimate of the Interconnection Customer's cost responsibility for the interconnection; and (iv) with respect to an Upgrade Request, the estimated cost of the requested system upgrades or expansion, or of the cost of the system upgrades or expansion, necessary to provide the requested incremental rights.

System Protection Facilities:

"System Protection Facilities" shall refer to the equipment required to protect (i) the Transmission System, other delivery systems and/or other generating systems connected to the Transmission System from faults or other electrical disturbance occurring at or on the Customer Facility, and (ii) the Customer Facility from faults or other electrical system disturbance occurring on the Transmission System or on other delivery systems and/or other generating systems to which the Transmission System is directly or indirectly connected. System Protection Facilities shall include such protective and regulating devices as are identified in the Applicable Technical Requirements and Standards or that are required by Applicable Laws and Regulations or other Applicable Standards, or as are otherwise necessary to protect personnel and equipment and to minimize deleterious effects to the Transmission System arising from the Customer Facility.

Tangible Net Worth:

"Tangible Net Worth" shall mean all assets (not including any intangible assets such as goodwill) less all liabilities. Any such calculation may be reduced by PJMSettlement upon review of the available financial information.

Target Allocation:

"Target Allocation" shall mean the allocation of Transmission Congestion Credits as set forth in Operating Agreement, Schedule 1, section 5.2.3, and the parallel provisions of Tariff, Attachment K-Appendix, or the allocation of Auction Revenue Rights Credits as set forth in

Operating Agreement, Schedule 1, section 7.4.3, and the parallel provisions of Tariff, Attachment K-Appendix.

Third Incremental Auction:

"Third Incremental Auction" shall mean an Incremental Auction conducted three months before the Delivery Year to which it relates.

Third-Party Sale:

"Third-Party Sale" shall mean any sale for resale in interstate commerce to a Power Purchaser that is not designated as part of Network Load under the Network Integration Transmission Service but not including a sale of energy through the PJM Interchange Energy Market established under the PJM Operating Agreement.

Total Net Obligation:

"Total Net Obligation" shall mean all unpaid billed Net Obligations plus any unbilled Net Obligation incurred to date, as determined by PJMSettlement on a daily basis, plus any other Obligations owed to PJMSettlement at the time.

Total Net Sell Position:

"Total Net Sell Position" shall mean all unpaid billed Net Sell Positions plus any unbilled Net Sell Positions accrued to date, as determined by PJMSettlement on a daily basis.

Transmission Congestion Charge:

"Transmission Congestion Charge" shall mean a charge attributable to the increased cost of energy delivered at a given load bus when the transmission system serving that load bus is operating under constrained conditions, or as necessary to provide energy for third-party transmission losses which shall be calculated and allocated as specified in Operating Agreement, Schedule 1, section 5.1 and the parallel provisions of Tariff, Attachment K-Appendix.

Transmission Congestion Credit:

"Transmission Congestion Credit" shall mean the allocated share of total Transmission Congestion Charges credited to each FTR Holder, calculated and allocated as specified in Operating Agreement, Schedule 1, section 5.2, and the parallel provisions of Tariff, Attachment K-Appendix.

Transmission Customer:

"Transmission Customer" shall mean any Eligible Customer (or its Designated Agent) that (i) executes a Service Agreement, or (ii) requests in writing that the Transmission Provider file with the Commission, a proposed unexecuted Service Agreement to receive transmission service

under Tariff, Part II. This term is used in the Tariff, Part I Common Service Provisions and in Tariff, Part VI to include customers receiving transmission service under Tariff, Part II and Part III.

Where used in Attachment K-Appendix of the Tariff or Schedule 1 of the Operating Agreement, Transmission Customer shall mean an entity using Point-to-Point Transmission Service.

Transmission Facilities:

"Transmission Facilities" shall have the meaning set forth in the Operating Agreement.

Transmission Forced Outage:

"Transmission Forced Outage" shall mean an immediate removal from service of a transmission facility by reason of an Emergency or threatened Emergency, unanticipated failure, or other cause beyond the control of the owner or operator of the transmission facility, as specified in the relevant portions of the PJM Manuals. A removal from service of a transmission facility at the request of the Office of the Interconnection to improve transmission capability shall not constitute a Forced Transmission Outage.

Transmission Injection Rights:

"Transmission Injection Rights" shall mean Capacity Transmission Injection Rights and Energy Transmission Injection Rights.

Transmission Interconnection Customer:

"Transmission Interconnection Customer" shall mean an entity that submits an Interconnection Request to interconnect or add Merchant Transmission Facilities to the Transmission System or to increase the capacity of Merchant Transmission Facilities interconnected with the Transmission System in the PJM Region or an entity that submits an Upgrade Request for Merchant Network Upgrades (including accelerating the construction of any transmission enhancement or expansion, other than Merchant Transmission Facilities, that is included in the Regional Transmission Expansion Plan prepared pursuant to Schedule 6 of the Operating Agreement).

Transmission Interconnection Facilities Study:

"Transmission Interconnection Facilities Study" shall mean a Facilities Study related to a Transmission Interconnection Request.

Transmission Interconnection Feasibility Study:

"Transmission Interconnection Feasibility Study" shall mean a study conducted by the Transmission Provider in accordance with Section 36.2 of the Tariff.

Transmission Interconnection Request:

"Transmission Interconnection Request" shall mean a request by a Transmission Interconnection Customer pursuant to Tariff, Part IV to interconnect or add Merchant Transmission Facilities to the Transmission System or to increase the capacity of existing Merchant Transmission Facilities interconnected with the Transmission System in the PJM Region.

Transmission Loading Relief:

"Transmission Loading Relief" shall mean NERC's procedures for preventing operating security limit violations, as implemented by PJM as the security coordinator responsible for maintaining transmission security for the PJM Region.

Transmission Loading Relief Customer:

"Transmission Loading Relief Customer" shall mean an entity that, in accordance with Operating Agreement, Schedule 1, section 1.10.6A and the parallel provisions of Tariff, Attachment K-Appendix, has elected to pay Transmission Congestion Charges during Transmission Loading Relief in order to continue energy schedules over contract paths outside the PJM Region that are increasing the cost of energy in the PJM Region.

Transmission Loss Charge:

"Transmission Loss Charge" shall mean the charges to each Market Participant, Network Customer, or Transmission Customer for the cost of energy lost in the transmission of electricity from a generation resource to load as specified in Operating Agreement, Schedule 1, section 5, and the parallel provisions of Tariff, Attachment K-Appendix.

Transmission Owner:

"Transmission Owner" shall mean each entity that owns, leases or otherwise has a possessory interest in facilities used for the transmission of electric energy in interstate commerce under the Tariff. The Transmission Owners are listed in Tariff, Attachment L.

Transmission Owner Attachment Facilities:

"Transmission Owner Attachment Facilities" shall mean that portion of the Transmission Owner Interconnection Facilities comprised of all Attachment Facilities on the Interconnected Transmission Owner's side of the Point of Interconnection.

Transmission Owner Interconnection Facilities:

"Transmission Owner Interconnection Facilities" shall mean all Interconnection Facilities that are not Customer Interconnection Facilities and that, after the transfer under Section 5.5 of Appendix 2 to Attachment P of the PJM Tariff to the Interconnected Transmission Owner of title to any Transmission Owner Interconnection Facilities that the Interconnection Customer

constructed, are owned, controlled, operated and maintained by the Interconnected Transmission Owner on the Interconnected Transmission Owner's side of the Point of Interconnection identified in appendices to the Interconnection Service Agreement and to the Interconnection Construction Service Agreement, including any modifications, additions or upgrades made to such facilities and equipment, that are necessary to physically and electrically interconnect the Customer Facility with the Transmission System or interconnected distribution facilities.

Transmission Owner Upgrade:

"Transmission Owner Upgrade" shall have the same meaning provided in the Operating Agreement.

Transmission Planned Outage:

"Transmission Planned Outage" shall mean any transmission outage scheduled in advance for a pre-determined duration and which meets the notification requirements for such outages specified in Operating Agreement, Schedule 1, and the parallel provisions of Tariff, Attachment K-Appendix or the PJM Manuals.

Transmission Provider:

The "Transmission Provider" shall be the Office of the Interconnection for all purposes, provided that the Transmission Owners will have the responsibility for the following specified activities:

(a) The Office of the Interconnection shall direct the operation and coordinate the maintenance of the Transmission System, except that the Transmission Owners will continue to direct the operation and maintenance of those transmission facilities that are not listed in the PJM Designated Facilities List contained in the PJM Manual on Transmission Operations;

(b) Each Transmission Owner shall physically operate and maintain all of the facilities that it owns; and

(c) When studies conducted by the Office of the Interconnection indicate that enhancements or modifications to the Transmission System are necessary, the Transmission Owners shall have the responsibility, in accordance with the applicable terms of the Tariff, Operating Agreement and/or the Consolidated Transmission Owners Agreement to construct, own, and finance the needed facilities or enhancements or modifications to facilities.

Transmission Provider's Monthly Transmission System Peak:

"Transmission Provider's Monthly Transmission System Peak" shall mean the maximum firm usage of the Transmission Provider's Transmission System in a calendar month.

Transmission Service:

"Transmission Service" shall mean Point-To-Point Transmission Service provided under Tariff,

Part II on a firm and non-firm basis.

Transmission Service Request:

"Transmission Service Request" shall mean a request for Firm Point-To-Point Transmission Service or a request for Network Integration Transmission Service.

Transmission System:

"Transmission System" shall mean the facilities controlled or operated by the Transmission Provider within the PJM Region that are used to provide transmission service under Tariff, Part II and Part III.

Transmission Withdrawal Rights:

"Transmission Withdrawal Rights" shall mean Firm Transmission Withdrawal Rights and Non-Firm Transmission Withdrawal Rights.

Uncleared Bid Exposure:

"Uncleared Bid Exposure" shall be a measure of exposure from Increment Offers and Decrement Bids activity relative to a Participant's established credit as defined in Tariff, Attachment Q. It is used only as a pre-screen to determine whether a Participant's Increment Offers and Decrement Bids should be subject to Increment Offer and Decrement Bid Screening.

Unconstrained LDA Group:

"Unconstrained LDA Group" shall mean a combined group of LDAs that form an electrically contiguous area and for which a separate Variable Resource Requirement Curve has not been established under Tariff, Attachment DD, section 5.10. Any LDA for which a separate Variable Resource Requirement Curve has not been established under Tariff, Attachment DD, section 5.10 shall be combined with all other such LDAs that form an electrically contiguous area.

Unforced Capacity:

"Unforced Capacity" shall have the meaning specified in the Reliability Assurance Agreement.

Unsecured Credit:

"Unsecured Credit" shall mean any credit granted by PJMSettlement to a Participant that is not secured by a form of Financial Security.

Unsecured Credit Allowance:

"Unsecured Credit Allowance" shall mean Unsecured Credit extended by PJMSettlement in an amount determined by PJMSettlement's evaluation of the creditworthiness of a Participant. This

is also defined as the amount of credit that a Participant qualifies for based on the strength of its own financial condition without having to provide Financial Security. See also: "Working Credit Limit."

Updated VRR Curve:

"Updated VRR Curve" shall mean the Variable Resource Requirement Curve for use in the Base Residual Auction of the relevant Delivery Year, updated to reflect any change in the Reliability Requirement from the Base Residual Auction to such Incremental Auction, and for Delivery Years through May 31, 2018, the Short-term Resource Procurement Target applicable to the relevant Incremental Auction.

Updated VRR Curve Decrement:

"Updated VRR Curve Decrement" shall mean the portion of the Updated VRR Curve to the left of a vertical line at the level of Unforced Capacity on the x-axis of such curve equal to the net Unforced Capacity committed to the PJM Region as a result of all prior auctions conducted for such Delivery Year and adjusted, if applicable, by a change in Unforced Capacity commitments associated with the transition provision of Tariff, Attachment DD, section 5.14C, 5.14D (as related to the 2016/2017 Delivery Year), and 5.14E.

Updated VRR Curve Increment:

"Updated VRR Curve Increment" shall mean the portion of the Updated VRR Curve to the right of a vertical line at the level of Unforced Capacity on the x-axis of such curve equal to the net Unforced Capacity committed to the PJM Region as a result of all prior auctions conducted for such Delivery Year and adjusted, if applicable, by a change in Unforced Capacity commitments associated with the transition provision of Tariff, Attachment DD, section 5.14C, 5.14D (as related to the 2016/2017 Delivery Year), and 5.14E.

Upgrade Construction Service Agreement:

"Upgrade Construction Service Agreement" shall mean that agreement entered into by an Eligible Customer, Upgrade Customer or Interconnection Customer proposing Merchant Network Upgrades, a Transmission Owner, and the Transmission Provider, pursuant to Tariff, Part VI, Subpart B, and in the form set forth in Attachment GG of the Tariff.

Upgrade Customer:

"Upgrade Customer" shall mean a customer that submits an Upgrade Request pursuant to Section 7.8 of Schedule 1 of the Operating Agreement.

Upgrade-Related Rights:

"Upgrade-Related Rights" shall mean Incremental Auction Revenue Rights, Incremental Available Transfer Capability Revenue Rights, Incremental Deliverability Rights, and

Incremental Capacity Transfer Rights.

Upgrade Request:

"Upgrade Request" shall mean a request submitted in the form prescribed in Attachment EE of the Tariff, for evaluation by the Transmission Provider of the feasibility and estimated costs of (a) a Merchant Network Upgrade or (b) the Customer-Funded Upgrades that would be needed to provide Incremental Auction Revenue Rights specified in a request pursuant to Section 7.8 of Schedule 1 of the Operating Agreement.

Up-to Congestion Counterflow Transaction:

"Up-to Congestion Counterflow Transaction" shall mean an Up-to Congestion Transaction will be deemed an Up-to Congestion Counterflow Transaction if the following value is negative: (a) when bidding, the lower of the bid price and the prior Up-to Congestion Historical Month's average real-time value for the transaction; or (b) for cleared Virtual Transactions, the cleared day-ahead price of the Virtual Transactions.

Up-to Congestion Historical Month:

"Up-to Congestion Historical Month" shall mean a consistently-defined historical period nominally one month long that is as close to a calendar month as PJM determines is practical.

Up-to Congestion Prevailing Flow Transaction:

An Up-to Congestion Transaction will be deemed an "Up-to Congestion Prevailing Flow Transaction" if it is not an Up-to Congestion Counterflow Transaction.

Up-to Congestion Reference Price:

"Up-to Congestion Reference Price" for an Up-to Congestion Transaction, shall be the specified percentile price differential between source and sink (defined as sink price minus source price) for hourly real-time prices experienced over the prior Up-to Congestion Historical Month, averaged with the same percentile value calculated for the second prior Up-to Congestion Historical Month. Up-to Congestion Reference Prices shall be calculated using the following historical percentiles:

For Up-to Congestion Prevailing Flow Transactions: 30th percentile
For Up-to Congestion Counterflow Transactions when bid: 20th percentile
For Up-to Congestion Counterflow Transactions when cleared: 5th percentile

Up-to Congestion Transaction:

"Up-to Congestion Transaction" shall have the meaning specified in Operating Agreement, Schedule 1, section 1.10.1A, and the parallel provisions of Tariff, Attachment K-Appendix.

Variable Loads:

"Variable Loads" shall have the meaning specified in Operating Agreement, Schedule 1, section 1.5A.6, and the parallel provisions of Tariff, Attachment K-Appendix.

Variable Resource Requirement Curve:

"Variable Resource Requirement Curve" shall mean a series of maximum prices that can be cleared in a Base Residual Auction for Unforced Capacity, corresponding to a series of varying resource requirements based on varying installed reserve margins, as determined by the Office of the Interconnection for the PJM Region and for certain Locational Deliverability Areas in accordance with the methodology provided in Tariff, Attachment DD, section 5.

Virtual Credit Exposure:
"Virtual Credit Exposure" shall be the amount of potential credit exposure created by a market participant's bid submitted into the Day-ahead market, as defined in Tariff, Attachment Q.

Virtual Transaction:

"Virtual Transaction" shall mean a Decrement Bid, Increment Offer and/or Up-to Congestion Transaction.

Virtual Transaction Screening:

"Virtual Transaction Screening" shall be the process of reviewing the Virtual Credit Exposure of submitted Virtual Transactions against the Credit Available for Virtual Transactions. If the credit required is greater than credit available, then the Virtual Transactions will not be accepted.

Virtual Transactions Net Activity:

"Virtual Transactions Net Activity" shall mean the aggregate net total, resulting from Virtual Transactions, of (i) Spot Market Energy charges, (ii) Transmission Congestion Charges, and (iii) Transmission Loss Charges, calculated as set forth in Attachment K-Appendix. Virtual Transactions Net Activity may be positive or negative.

Wholesale Transaction:

As used in Tariff, Part IV, "Wholesale Transaction" shall mean any transaction involving the transmission or sale for resale of electricity in interstate commerce that utilizes any portion of the Transmission System.

Working Credit Limit:

"Working Credit Limit" shall mean an amount is 75% of the Market Participant's Unsecured Credit Allowance and/or 75% of the Financial Security provided by the Market Participant to PJMSettlement. The Working Credit Limit establishes the maximum amount of Total Net Obligation that a Market Participant may have outstanding at any time. The calculation of Working Credit Limit shall take into account applicable reductions for Minimum Participation

Requirements, FTR, or other credit requirement determinants as defined inTariff, Attachment Q.

Working Credit Limit for Virtual Transactions:

The "Working Credit Limit for Virtual Transactions" shall be calculated as 75% of the Market Participant's Unsecured Credit Allowance and/or 75% of the Financial Security provided by the Market Participant to PJMSettlement when the Market Participant is at or below its Peak Market Activity credit requirements as specified in Tariff, Attachment Q, section II.D. When the Market Participant provides additional Unsecured Credit Allowance and/or Financial Security in excess of its Peak Market Activity credit requirements, such additional Unsecured Credit Allowance and/or Financial Security shall not be discounted by 25% when calculating the Working Credit Limit for Virtual Transactions. The Working Credit Limit for Virtual Transactions is a component in the calculation of Credit Available for Virtual Transactions. The calculation of Working Credit Limit for Virtual Transactions shall take into account applicable reductions for Minimum Participation Requirements, FTR, or other credit requirement determinants as defined in Tariff, Attachment Q.

Zonal Base Load:

"Zonal Base Load" shall mean the lowest daily zonal peak load from the twelve month period ending October 21 of the calendar year immediately preceding the calendar year in which an annual Auction Revenue Right allocation is conducted, increased by the projected load growth rate for the relevant Zone, when non-extraordinary conditions exist for the applicable twelve month period, as determined by PJM. If the lowest daily zonal peak load from the applicable twelve month period is abnormally low due to extraordinary conditions, as determined by PJM, Zonal Base Load shall mean the next lowest daily zonal peak load that was not affected by extraordinary conditions during the applicable twelve month period, increased by the projected load growth rate for the relevant Zone. For the purposes of this definition, extraordinary conditions shall mean a significant event, or combination of events, that affect the operation of the bulk power system in an atypical manner and results in an abnormal reduction in the consumption of energy within a Zone.

Zonal Capacity Price:

"Zonal Capacity Price" shall mean the clearing price required in each Zone to meet the demand for Unforced Capacity and satisfy Locational Deliverability Requirements for the LDA or LDAs associated with such Zone. If the Zone contains multiple LDAs with different Capacity Resource Clearing Prices, the Zonal Capacity Price shall be a weighted average of the Capacity Resource Clearing Prices for such LDAs, weighted by the Unforced Capacity of Capacity Resources cleared in each such LDA.

Zone:

"Zone" shall mean an area within the PJM Region, as set forth in Tariff, Attachment J.

Zone Network Load:

"Zone Network Load" shall mean Network Load that is located inside of the area comprised of the PJM Region.

APPENDIX 2

STANDARD CONSTRUCTION TERMS AND CONDITIONS

Preamble

The construction of any Interconnection Facilities required to interconnect a Customer Facility with the Transmission System shall be in accordance with the following Standard Construction Terms and Conditions.

1 Facilitation by Transmission Provider

Transmission Provider shall keep itself apprised of the status of the Constructing Entities' construction-related activities and, upon request of either of them, Transmission Provider shall meet with the Constructing Entities separately or together to assist them in resolving issues between them regarding their respective activities, rights and obligations under this Appendix 2 to this CSA. Each Constructing Entity shall cooperate in good faith with the other Construction Parties in Transmission Provider's efforts to facilitate resolution of disputes.

2 Construction Obligations

2.1 Interconnection Customer Obligations

2.1.1 Generally:

Interconnection Customer shall, at its sole cost and expense, design, procure, construct, own and install the Customer Facility and the Customer Interconnection Facilities in accordance with this Appendix 2 to this CSA, Applicable Standards, Applicable Laws and Regulations, Good Utility Practice, the Scope of Work and the Facilities Study (to the extent that design of the Customer Interconnection Facilities is included therein), provided, however, that, in the event and to the extent that the Customer Facility is comprised of or includes Merchant Network Upgrades, subject to the terms of Section 3.2.3 of this Appendix 2, the Interconnected Transmission Owner, shall design, procure, construct and install such Merchant Network Upgrades.

2.1.2 Interconnection Customer Drawings:

On or before the applicable date specified in the Milestones of the Interconnection Service Agreement, Interconnection Customer shall submit to the Interconnected Transmission Owner and Transmission Provider initial drawings, certified by a professional engineer, of the Customer Interconnection Facilities. Interconnected Transmission Owner and Transmission Provider shall review the drawings to assess the consistency of Interconnection Customer's design of the Customer Interconnection Facilities with the design that was analyzed in the planning model as described in PJM Manuals. After consulting with the Interconnected Transmission Owner, Transmission Provider shall provide comments on the drawings to Interconnection Customer within forty-five (45) days after its receipt thereof, after which time any drawings not subject to comment shall be deemed to be approved. All drawings provided hereunder shall be deemed to be Confidential Information.

2.1.3 Effect of Review:

Interconnected Transmission Owner's and Transmission Provider's reviews of Interconnection Customer's initial drawings of the Customer Interconnection Facilities shall not be construed as confirming, endorsing or providing a warranty as to the fitness, safety, durability or reliability of such facilities or the design thereof. At its sole cost and expense, Interconnection Customer shall make such changes to the design of the Customer Interconnection Facilities as may reasonably be required by Transmission Provider, in consultation with the Interconnected Transmission Owner, to ensure that the Customer Interconnection Facilities meet Applicable Standards and, to the extent that design of the Customer Interconnection Facilities is included in the Facilities Study, to ensure that such facilities conform with the Facilities Study.

2.2 Transmission Owner Interconnection Facilities and Merchant Network Upgrades

2.2.1 Generally:

All Transmission Owner Interconnection Facilities necessary for the interconnection of the Customer Facility shall be designed, procured, installed and constructed in accordance with this Appendix 2, Applicable Standards, Applicable Laws and Regulations, Good Utility Practice, the Facilities Study and the Scope of Work under the Interconnection Construction Service Agreement(s).

2.2.2 Cost Responsibility:

Responsibility for the Costs of the Transmission Owner Interconnection Facilities shall be assigned in accordance with Section 217 of the Tariff, as applicable, and shall be stated in the Interconnection Service Agreement.

2.2.3 Construction Responsibility:

Except as otherwise permitted under, or as otherwise agreed upon by the Interconnection Customer and the Interconnected Transmission Owner pursuant to, Section 3 of this Appendix 2, the Interconnected Transmission Owner shall be responsible for the design, procurement, construction and installation of the Transmission Owner Interconnection Facilities. In the event that there are multiple Interconnected Transmission Owners, the Transmission Provider shall determine how to allocate the construction responsibility among them unless they have reached agreement among themselves on how to proceed.

2.2.4 Ownership of Transmission Owner Interconnection Facilities:

The Interconnected Transmission Owner shall own all Transmission Owner Interconnection Facilities that it builds. In addition, the Interconnection Customer will convey to the Interconnected Transmission Owner, as provided in Section 5.5 of this Appendix 2, title to all Transmission Owner Interconnection Facilities built by the Interconnection Customer pursuant to the terms of Section 3.2 of this Appendix 2. Nothing in this section shall affect the interconnection rights otherwise available to a Transmission Interconnection Customer under Subpart C of Part VI of the Tariff.

2.2A Scope of Applicable Technical Requirements and Standards:

Applicable Technical Requirements and Standards shall apply to the design, procurement, construction and installation of the Interconnection Facilities and Merchant A.C. Transmission Facilities only to the extent that the provisions thereof relate to the design, procurement, construction and/or installation of such facilities. Such provisions relating to the design, procurement, construction and/or installation of facilities shall be appended to the Interconnection Construction Service Agreement. The Interconnection Parties shall mutually agree upon, or in the absence of such agreement, Transmission Provider shall determine, which provisions of the Applicable Technical Requirements and Standards should be identified in the Interconnection Construction Service Agreement. In the event of any conflict between the provisions of the Applicable Technical Requirements and Standards that are appended to this Interconnection Construction Service Agreement and any later-modified provisions that are stated in the pertinent PJM Manual, the provisions appended to this Interconnection Construction Service Agreement shall control.

2.3 Construction By Interconnection Customer

2.3.1 Construction Prior to Execution of Interconnection Construction Service Agreement:

If the Interconnection Customer procures materials for, and/or commences construction of, the Customer Interconnection Facilities, any Transmission Owner Interconnection Facilities, or any Merchant Network Upgrades that it has elected to construct by exercising the Option to Build under Section 3.2.3 of this Appendix 2, or for any subsequent modification thereto, prior to the execution of the Interconnection Construction Service Agreement or, if the Interconnection Construction Service Agreement has been executed, before the Interconnected Transmission Owner and Transmission Provider have accepted the Interconnection Customer's initial design, or any subsequent modification to the design, of such Interconnection Facilities and/or Merchant Network Upgrades, such procurement and/or construction shall be at the Interconnection Customer's sole risk, cost and expense.

2.3.2 Monitoring and Inspection:

The Interconnected Transmission Owner may monitor construction and installation of Interconnection Facilities and/or Merchant Network Upgrades that the Interconnection Customer is constructing. Upon reasonable notice, authorized personnel of the Interconnected Transmission Owner may inspect any or all of such Interconnection Facilities and/or Merchant Network Upgrades to assess their conformity with Applicable Standards.

2.3.3 Notice of Completion:

The Interconnection Customer shall notify the Transmission Provider and the Interconnected Transmission Owner in writing when it has completed construction of (i) the Customer Facility; (ii) the Customer Interconnection Facilities; and (iii) any Transmission Owner Interconnection

Facilities and/or any Merchant Network Upgrades for which it has exercised the Option to Build under Section 3 of this Appendix 2.

2.4 Tax Liability

2.4.1 Safe Harbor Provisions:

This Section 2.4.1 is applicable only to Generation Interconnection Customers. Provided that Interconnection Customer agrees to conform to all requirements of the Internal Revenue Service ("IRS") (e.g., the "safe harbor" provisions of IRS Notices 2001-82 and 88-129) that would confer nontaxable status on some or all of the transfer of property, including money, by Interconnection Customer to the Interconnected Transmission Owner for payment of the Costs of construction of the Transmission Owner Interconnection Facilities, the Interconnected Transmission Owner, based on such agreement and on current law, shall treat such transfer of property to it as nontaxable income and, except as provided in Section 2.4.2 of this Appendix 2, shall not include income taxes in the Costs of Transmission Owner Interconnection Facilities that are payable by Interconnection Customer under this Appendix 2. Interconnection Customer shall document its agreement to conform to IRS requirements for such non-taxable status in the Interconnection Service Agreement, the Interconnection Construction Service Agreement, and/or the Interim Interconnection Service Agreement.

2.4.2 Tax Indemnity:

Interconnection Customer shall indemnify the Interconnected Transmission Owner for any costs that Interconnected Transmission Owner incurs in the event that the IRS and/or a state department of revenue (State) determines that the property, including money, transferred by Interconnection Customer to the Interconnected Transmission Owner with respect to the construction of the Transmission Owner Interconnection Facilities is taxable income to the Interconnected Transmission Owner. Interconnection Customer shall pay to the Interconnected Transmission Owner, on demand, the amount of any income taxes that the IRS or a State assesses to the Interconnected Transmission Owner in connection with such transfer of property and/or money, plus any applicable interest and/or penalty charged to the Interconnected Transmission Owner. In the event that the Interconnected Transmission Owner chooses to contest such assessment, either at the request of Interconnection Customer or on its own behalf, and prevails in reducing or eliminating the tax, interest and/or penalty assessed against it, the Interconnected Transmission Owner shall refund to Interconnection Customer the excess of its demand payment made to the Interconnected Transmission Owner over the amount of the tax, interest and penalty for which the Interconnected Transmission Owner is finally determined to be liable. Interconnection Customer's tax indemnification obligation under this section shall survive any termination of the Interconnection Construction Service Agreement.

2.4.3 Taxes Other Than Income Taxes:

Upon the timely request by Interconnection Customer, and at Interconnection Customer's sole expense, the Interconnected Transmission Owner shall appeal, protest, seek abatement of, or otherwise contest any tax (other than federal or state income tax) asserted or assessed against the

Interconnected Transmission Owner for which Interconnection Customer may be required to reimburse Transmission Provider under the terms of this Interconnection Construction Service Agreement, or Part VI of the Tariff. Interconnection Customer shall pay to the Interconnected Transmission Owner on a periodic basis, as invoiced by the Interconnected Transmission Owner, the Interconnected Transmission Owner's documented reasonable costs of prosecuting such appeal, protest, abatement, or other contest. Interconnection Customer and the Interconnected Transmission Owner shall cooperate in good faith with respect to any such contest. Unless the payment of such taxes is a prerequisite to an appeal or abatement or cannot be deferred, no amount shall be payable by Interconnection Customer to the Interconnected Transmission Owner for such contested taxes until they are assessed by a final, non-appealable order by any court or agency of competent jurisdiction. In the event that a tax payment is withheld and ultimately due and payable after appeal, Interconnection Customer will be responsible for all taxes, interest and penalties, other than penalties attributable to any delay caused by the Interconnected Transmission Owner.

2.4.4 Income Tax Gross-Up

2.4.4.1 Additional Security:

In the event that Interconnection Customer does not provide the safe harbor documentation required under Section 2.4.1 of this Appendix 2 prior to execution of the Interconnection Construction Service Agreement, within 15 days after such execution, Transmission Provider shall notify Interconnection Customer in writing of the amount of additional Security that Interconnection Customer must provide. The amount of Security that a Transmission Interconnection Customer must provide initially shall include any amounts described as additional Security under this Section 2.4.4 regarding income tax gross-up.

2.4.4.2 Amount:

The required additional Security shall be in an amount equal to the amount necessary to gross up fully for currently applicable federal and state income taxes the estimated Costs of Local Upgrades and Network Upgrades for which Interconnection Customer previously provided Security. Accordingly, the additional Security shall equal the amount necessary to increase the total Security provided to the amount that would be sufficient to permit the Interconnected Transmission Owner to receive and retain, after the payment of all applicable income taxes ("Current Taxes") and taking into account the present value of future tax deductions for depreciation that would be available as a result of the anticipated payments or property transfers (the "Present Value Depreciation Amount"), an amount equal to the estimated Costs of Local Upgrades and Network Upgrades for which Interconnection Customer is responsible under the Interconnection Service Agreement. For this purpose, Current Taxes shall be computed based on the composite federal and state income tax rates applicable to the Interconnected Transmission Owner at the time the additional Security is received, determined using the highest marginal rates in effect at that time (the "Current Tax Rate"), and (ii) the Present Value Depreciation Amount shall be computed by discounting the Interconnected Transmission Owner's anticipated tax depreciation deductions associated with such payments or property transfers by its current weighted average cost of capital.

2.4.4.3 Time for Payment:

Interconnection Customer must provide the additional Security, in a form and with terms as required by Section 212.4, within 15 days after its receipt of Transmission Provider's notice under this section. The requirement for additional Security under this section shall be treated as a milestone included in the Interconnection Service Agreement pursuant to Section 212.5.

2.4.5 Tax Status:

Each Party shall cooperate with the other to maintain the other Party's tax status. Nothing in this Interconnection Construction Service Agreement or the Tariff is intended to adversely affect any Interconnected Transmission Owner's tax exempt status with respect to the issuance of bonds including, but not limited to, local furnishing bonds.

2.5 Safety

2.5.1 General:

Each Construction Party shall perform all work hereunder that may reasonably be expected to affect any other Construction Party in accordance with Good Utility Practice, Applicable Standards and Applicable Laws and Regulations pertaining to the safety of persons or property. A Construction Party performing work within an area controlled by another Construction Party must abide by the safety rules applicable to the area.

2.5.2 Environmental Releases:

Each Construction Party shall notify each other Construction Party, first orally and then in writing, of the release of any Hazardous Substances, any asbestos or lead abatement activities, or any type of remediation activities related to the Customer Facility or the Interconnection Facilities, any of which may reasonably be expected to affect another Construction Party. The notifying Construction Party shall (i) provide the notice as soon as possible, (ii) make a good faith effort to provide the notice within twenty-four hours after the Construction Party becomes aware of the occurrence, and (iii) promptly furnish to each other Construction Party copies of any publicly available reports filed with any governmental agencies addressing such events.

2.6 Construction-Related Access Rights:

The Interconnected Transmission Owner and the Interconnection Customer herein grant each other at no charge such rights of access to areas that it owns or otherwise controls as may be necessary for performance of their respective obligations, and exercise of their respective rights, pursuant to this Appendix 2, provided that either of them performing the construction will abide by the safety, security and work rules applicable to the area where construction activity is occurring.

2.7 Coordination Among Construction Parties:

The Transmission Provider, the Interconnection Customer, and all Interconnected Transmission Owners shall communicate and coordinate their activities as necessary to satisfy their obligations under this Interconnection Construction Service Agreement.

3 Schedule Of Work

3.1 Construction by Interconnection Customer:

The Interconnection Customer shall use Reasonable Efforts to design, procure, construct and install the Customer Interconnection Facilities and any Transmission Owner Interconnection Facilities that it elects to build by exercise of the Option to Build (defined in Section 3.2.3.1 below) in accordance with the Schedule of Work.

3.2 Construction by Interconnected Transmission Owner

3.2.1 Standard Option:

The Interconnected Transmission Owner shall use Reasonable Efforts to design, procure, construct and install the Transmission Owner Interconnection Facilities that it is responsible for constructing in accordance with the Schedule of Work.

3.2.1.1 Construction Sequencing:

In general, the sequence of the proposed dates of Initial Operation of Interconnection Customers seeking interconnection to the Transmission System will determine the sequence of construction of Network Upgrades.

3.2.2 Negotiated Contract Option:

As an alternative to the Standard Option set forth in Section 3.2.1 of this Appendix 2, the Interconnected Transmission Owner and the Interconnection Customer may mutually agree to a Negotiated Contract Option for the Interconnected Transmission Owner's design, procurement, construction and installation of the Transmission Owner Interconnection Facilities. Under the Negotiated Contract Option, the Interconnection Customer and the Interconnected Transmission Owner may agree to terms different from those included in the Standard Option of Section 3.2.1 above and the corresponding standard terms set forth in the applicable provisions of Part VI of the Tariff and this Appendix 2. Under the Negotiated Contract Option, negotiated terms may include the work schedule applicable to the Interconnected Transmission Owner's construction activities and changes to same (Section 3.3 of this Appendix 2); payment provisions, including the schedule of payments; incentives, penalties and/or liquidated damages related to timely completion of construction (Section 3.2.1 of this Appendix 2); use of third party contractors; and responsibility for Costs, but only as between the Interconnection Customer and the Interconnected Transmission Owner that are parties to this Interconnection Construction Service Agreement; no other Interconnection Customer's responsibility for Costs may be affected (Section 217 of the Tariff). No other terms of the Tariff or this Appendix 2 shall be subject to

modification under the Negotiated Contract Option. The terms and conditions of the Tariff that may be negotiated pursuant to the Negotiated Contract Option shall not be affected by use of the Negotiated Contract Option except as and to the extent that they are modified by the parties' agreement pursuant to such option. All terms agreed upon pursuant to the Negotiated Contract Option shall be stated in full in an appendix to this Interconnection Construction Service Agreement.

3.2.3 Option to Build

3.2.3.1 Option:

In the event that the Interconnected Transmission Owner and the Interconnection Customer are unable to agree upon the terms of an Interconnection Construction Service Agreement (a) on or before the date that is 30 days after Interconnection Customer's execution of the Interconnection Service Agreement, or (b) by such earlier date as is reasonable in the light of the schedule for construction of, as the case may be, the Transmission Owner Interconnection Facilities, as set forth in the Facilities Study, and subject to the terms and conditions set forth in Sections 2 and 3 of this Appendix 2, or if mutually agreed by and between the Interconnection Customer and the Transmission Owner, the Interconnection Customer shall have the right, but not the obligation ("Option to Build"), to design, procure, construct and install all or any portion of the Transmission Owner Interconnection Facilities. In order to exercise this Option to Build, the Interconnection Customer must provide Transmission Provider and the Interconnected Transmission Owner with written notice of its election to exercise the option by no later than seven days after the date that is 30 days after Interconnection Customer's execution of the Interconnection Service Agreement, specifying either that a mutual agreement has been reached between the Interconnection Customer and the Interconnected Transmission Owner that the Interconnection Customer will exercise the Option to Build, or the specific terms and conditions of the Interconnection Construction Service Agreement upon which the Interconnected Transmission Owner and the Interconnection Customer are unable to agree and the efforts undertaken by the Interconnection Customer to resolve such disagreement; provided, however, that the Interconnection Customer and the Interconnected Transmission Owner may by mutual agreement extend the time period for exercise of the option.

3.2.3.2 General Conditions Applicable to Option:

In addition to the other terms and conditions applicable to the construction of facilities under this Appendix 2, the Option to Build is subject to the following conditions:

(a) The Interconnection Customer must obtain or arrange to obtain all necessary permits and authorizations for the construction and installation of the Transmission Owner Interconnection Facilities that it is building, provided, however, that when the Interconnected Transmission Owner's assistance is required, the Interconnected Transmission Owner shall assist the Interconnection Customer in obtaining such necessary permits or authorizations with efforts similar in nature and extent to those that the Interconnected Transmission Owner typically undertakes in acquiring permits and authorizations for construction of facilities on its own behalf;

(b) The Interconnection Customer must obtain all necessary land rights for the construction and installation of the Transmission Owner Interconnection Facilities that it is building, provided, however, that upon Interconnection Customer's reasonable request, the Interconnected Transmission Owner shall assist the Interconnection Customer in acquiring such land rights with efforts similar in nature and extent to those that the Interconnected Transmission Owner typically undertakes in acquiring land rights for construction of facilities on its own behalf;

(c) Notwithstanding anything stated herein, each Interconnected Transmission Owner shall have the exclusive right and obligation to perform the line attachments (tie-in work), and to calibrate remote terminal units and relay settings, required for the interconnection to such Interconnected Transmission Owner's existing facilities of any Transmission Owner Interconnection Facilities that the Interconnection Customer builds; and

(d) The Transmission Owner Interconnection Facilities built by the Interconnection Customer shall be successfully inspected, tested and energized pursuant to Sections 3.8 and 3.9 of this Appendix 2.

3.2.3.3 Additional Conditions Regarding Network Facilities:

To the extent that the Interconnection Customer utilizes the Option to Build for design, procurement, construction and/or installation of (a) any Transmission Owner Interconnection Facilities that are Local Upgrades or Network Upgrades to Transmission System facilities that are in existence or under construction by or on behalf of the Interconnected Transmission Owner on the date that the Interconnection Customer solicits bids under Section 3.2.3.7 below, or (b) Transmission Owner Interconnection Facilities that are to be located on land or in right-of-way owned or controlled by the Interconnected Transmission Owner, and in addition to the other terms and conditions applicable to the design, procurement, construction and/or installation of facilities under this Appendix 2, all work shall comply with the following further conditions:

(i) All work performed by or on behalf of the Interconnection Customer shall be conducted by contractors, and using equipment manufacturers or vendors, that are listed on the Interconnected Transmission Owner's List of Approved Contractors;

(ii) The Interconnected Transmission Owner shall have full site control of, and reasonable access to, its property at all times for purposes of tagging or operation, maintenance, repair or construction of modifications to, its existing facilities and/or for performing all tie-ins of Interconnection Facilities built by or for the Interconnection Customer; and for acceptance testing of any equipment that will be owned and/or operated by the Interconnected Transmission Owner;

(iii) The Interconnected Transmission Owner shall have the right to have a reasonable number of appropriate representatives present for all work done on its property/facilities or regarding the Transmission Owner Interconnection Facilities, and the right to stop, or to order corrective measures with respect to, any such work that reasonably could be expected to have an

adverse effect on reliability, safety or security of persons or of property of the Interconnected Transmission Owner or any portion of the Transmission System, provided that, unless circumstances do not reasonably permit such consultations, the Interconnected Transmission Owner shall consult with the Interconnection Customer and with Transmission Provider before directing that work be stopped or ordering any corrective measures;

(iv) The Interconnection Customer and its contractors, employees and agents shall comply with the Interconnected Transmission Owner's safety, security and work rules, environmental guidelines and training requirements applicable to the area(s) where construction activity is occurring and shall provide all reasonably required documentation to the Interconnected Transmission Owner, provided that the Interconnected Transmission Owner previously has provided its safety, security and work rules and training requirements applicable to work on its facilities to Transmission Provider and the Interconnection Customer within 20 business days after a request therefor made by Interconnection Customer following its receipt of the Facilities Study;

(v) The Interconnection Customer shall be responsible for controlling the performance of its contractors, employees and agents; and

(vi) All activities performed by or on behalf of the Interconnection Customer pursuant to its exercise of the Option to Build shall be subject to compliance with Applicable Laws and Regulations, including those governing union staffing and bargaining unit obligations, and Applicable Standards.

3.2.3.4 Administration of Conditions:

To the extent that the Interconnected Transmission Owner exercises any discretion in the application of any of the conditions stated in Sections 3.2.3.2 and 3.2.3.3 of this Appendix 2, it shall apply each such condition in a manner that is reasonable and not unduly discriminatory and it shall not unreasonably withhold, condition, or delay any approval or authorization that the Interconnection Customer may require for the purpose of complying with any of those conditions.

3.2.3.5 Approved Contractors:

(a) Each Transmission Owner shall develop and shall provide to Transmission Provider a List of Approved Contractors. Each Transmission Owner shall include on its List of Approved Contractors no fewer than three contractors and no fewer than three manufacturers or vendors of major transmission-related equipment, unless a Transmission Owner demonstrates to Transmission Provider's reasonable satisfaction that it is feasible only to include a lesser number of construction contractors, or manufacturers or vendors, on its List of Approved Contractors. Transmission Provider shall publish each Transmission Owner's List of Approved Contractors in a PJM Manual and shall make such manual available on its internet website.

(b) Upon request of an Interconnection Customer, a Transmission Owner shall add to its List of Approved Contractors (1) any design or construction contractor regarding which the

Interconnection Customer provides such information as the Transmission Owner may reasonably require which demonstrates to the Transmission Owner's reasonable satisfaction that the candidate contractor is qualified to design, or to install and/or construct new facilities or upgrades or modifications to existing facilities on the Transmission Owner's system, or (2) any manufacturer or vendor of major transmission-related equipment (e.g., high-voltage transformers, transmission line, circuit breakers) regarding which the Interconnection Customer provides such information as the Transmission Owner may reasonably require which demonstrates to the Transmission Owner's reasonable satisfaction that the candidate entity's major transmission-related equipment is acceptable for installation and use on the Transmission Owner's system. No Transmission Owner shall unreasonably withhold, condition, or delay its acceptance of a contractor, manufacturer, or vendor proposed for addition to its List of Approved Contractors.

3.2.3.6 Construction by Multiple Interconnection Customers:

In the event that there are multiple Interconnection Customers that wish to exercise an Option to Build with respect to Interconnection Facilities of the types described in Section 3.2.3.3 to this Appendix 2, the Transmission Provider shall determine how to allocate the construction responsibility among them unless they reach agreement among themselves on how to proceed.

3.2.3.7 Option Procedures:

(a) Within 10 days after notifying Transmission Provider and the Interconnected Transmission Owner of its election to exercise the Option to Build, Interconnection Customer shall solicit bids from one or more Approved Contractors named on the Interconnected Transmission Owner's List of Approved Contractors to procure equipment for, and/or to design, construct and/or install, the Transmission Owner Interconnection Facilities that the Interconnection Customer seeks to build under the Option to Build on terms (i) that will meet the Interconnection Customer's proposed schedule; (ii) that, if the Interconnection Customer seeks to have an Approved Contractor construct or install Transmission Owner Interconnection Facilities, will satisfy all of the conditions on construction specified in Sections 3.2.3.2 and 3.2.3.3 of this Appendix 2; and (iii) that will satisfy the obligations of a Constructing Entity (other than those relating to responsibility for the costs of facilities) under this Appendix 2.

(b) Any additional costs arising from the bidding process or from the final bid of the successful Approved Contractor shall be the sole responsibility of the Interconnection Customer.

(c) Upon receipt of a qualifying bid acceptable to it, the Interconnection Customer shall contract with the Approved Contractor that submitted the qualifying bid. Such contract shall meet the standards stated in paragraph (a) of this section.

(d) In the absence of a qualifying bid acceptable to the Interconnection Customer in response to its solicitation, the Interconnected Transmission Owner(s) shall be responsible for the design, procurement, construction and installation of the Transmission Owner Interconnection Facilities in accordance with the Standard Option described in Section 3.2.1 of this Appendix 2.

3.2.3.8 Interconnection Customer Drawings:

Interconnection Customer shall submit to the Interconnected Transmission Owner and Transmission Provider initial drawings, certified by a professional engineer, of the Transmission Owner Interconnection Facilities that Interconnection Customer arranges to build under the Option to Build. The Interconnected Transmission Owner shall review the drawings to assess the consistency of Interconnection Customer's design of the pertinent Transmission Owner Interconnection Facilities with Applicable Standards and the Facilities Study. Interconnected Transmission Owner, with facilitation and oversight by Transmission Provider, shall provide comments on such drawings to Interconnection Customer within sixty days after its receipt thereof, after which time any drawings not subject to comment shall be deemed to be approved. All drawings provided hereunder shall be deemed to be Confidential Information.

3.2.3.9 Effect of Review:

Interconnected Transmission Owner's review of Interconnection Customer's initial drawings of the Transmission Owner Interconnection Facilities that the Interconnection Customer is building shall not be construed as confirming, endorsing or providing a warranty as to the fitness, safety, durability or reliability of such facilities or the design thereof. At its sole cost and expense, Interconnection Customer shall make such changes to the design of the pertinent Transmission Owner Interconnection Facilities as may reasonably be required by Transmission Provider, in consultation with the Interconnected Transmission Owner, to ensure that the Transmission Owner Interconnection Facilities that Interconnection Customer is building meet Applicable Standards and conform with the Facilities Study.

3.3 Revisions to Schedule of Work:

The Schedule of Work shall be revised as required in accordance with Transmission Provider's scope change process for interconnection projects set forth in the PJM Manuals, or otherwise by mutual agreement of the Construction Parties, which agreement shall not be unreasonably withheld, conditioned or delayed.

3.4 Suspension:

The following provision applies to Interconnection Requests which have entered the New Services Queue prior to February 1, 2011:

Interconnection Customer shall have the right, upon written notice to Transmission Provider and Interconnected Transmission Owner, to suspend at any time all work by Interconnected Transmission Owner associated with the construction and installation of the Transmission Owner Interconnection Facilities required under an Interconnection Service Agreement or Interconnection Construction Service Agreement, with the condition that, notwithstanding such suspension, the Transmission System shall be left in a safe and reliable condition in accordance with Good Utility Practice and Transmission Provider's safety and reliability criteria. This suspension right permits the Interconnection Customer to request one or more suspensions of

work for a cumulative period of up to three years for each Interconnection Request. Interconnection Customer's notice of suspension shall include an estimated duration of the suspension and other information related to the suspension.

The following provision applies to Interconnection Requests which have entered the New Services Queue on or after February 1, 2011:

Interconnection Customer shall have the right, upon written notice to Transmission Provider and Interconnected Transmission Owner, to suspend at any time all work by Interconnected Transmission Owner associated with the construction and installation of the Transmission Owner Interconnection Facilities required under an Interconnection Service Agreement or Interconnection Construction Service Agreement, with the condition that, notwithstanding such suspension, the Transmission System shall be left in a safe and reliable condition in accordance with Good Utility Practice and Transmission Provider's safety and reliability criteria. This suspension right permits the Interconnection Customer to request one or more suspensions of work for a cumulative period of up to (i) three years for an Interconnection Request for which the Transmission Provider determines that such suspension would not be deemed a Material Modification, or (ii) one year for an Interconnection Request for which the Transmission Provider determine that such suspension would be deemed a Material Modification. Interconnection Customer's notice of suspension shall include an estimated duration of the suspension and other information related to the suspension.

3.4.1 Costs:

In the event of a suspension under this section, Interconnection Customer shall be responsible for all reasonable and necessary Cancellation Costs which Interconnected Transmission Owner or Transmission Provider (i) has incurred pursuant to the Interconnection Service Agreement or Interconnection Construction Service Agreement prior to the suspension and (ii) incurs in suspending such work, including any costs incurred to perform such work as may be necessary to ensure the safety of persons and property and the integrity of the Transmission System during such suspension and, if applicable, any costs incurred in connection with the cancellation or suspension of material, equipment and/or labor contracts which Interconnected Transmission Owner or Transmission Provider cannot reasonably avoid; provided, however, that prior to cancelling or suspending any such material, equipment or labor contract, Interconnected Transmission Owner or Transmission Provider, as the case may be, shall obtain Interconnection Customer's authorization to do so. Transmission Provider shall invoice Interconnection Customer pursuant to Section 9 of this Appendix 2 for Cancellation Costs for which the customer is liable under this section. Interconnected Transmission Owner and Transmission Provider shall use due diligence to minimize Cancellation Costs in the event of a suspension of work.

3.4.2 Duration of Suspension:

In the event Interconnection Customer suspends work by Interconnected Transmission Owner required under an Interconnection Service Agreement or Interconnection Construction Service Agreement pursuant to this Section 3.4, and has not requested Transmission Provider and the

Interconnected Transmission Owner to recommence the work required under the applicable agreement(s) on or before the expiration of the time period allowed under this Section 3.4 following commencement of such suspension, the Interconnection Construction Service Agreement and the Interconnection Service Agreement for the Interconnection Request for which Interconnection Customer suspended work shall be deemed terminated as of the end of such suspension time period. The suspension time shall begin on the date the suspension is requested, or on the date of Interconnection Customer's written notice of suspension to Transmission Provider, if no effective date was specified.

3.5 Right to Complete Transmission Owner Interconnection Facilities:

In the event that, at any time prior to successful Stage Two energization of the Transmission Owner Interconnection Facilities pursuant to Section 3.9 of Appendix 2, the Interconnection Customer terminates its obligations under this Appendix 2 pursuant to Section 14.1.2 below due to a Default by the Interconnected Transmission Owner, the Interconnection Customer may elect to complete the design, procurement, construction and installation of the Transmission Owner Interconnection Facilities. The Interconnection Customer shall notify the Interconnected Transmission Owner and Transmission Provider in writing of its election to complete the Transmission Owner Interconnection Facilities within 10 days after the date of Interconnection Customer's notice of termination pursuant to Section 14.1.2 of this Appendix 2. In the event that the Interconnection Customer elects to complete the Transmission Owner Interconnection Facilities, it shall do so in accordance with the terms and conditions of the Option to Build under Section 3.2.3 of this Appendix 2 and shall be responsible for paying all costs of completing the Transmission Owner Interconnection Facilities incurred after the date of its notice of election to complete the facilities. Interconnection Customer may take possession of, and may use in completing the Transmission Owner Interconnection Facilities, any materials and supplies and equipment (other than equipment and facilities that already have been installed or constructed) acquired by the Interconnected Transmission Owner for construction, and included in the Costs, of the Transmission Owner Interconnection Facilities, provided that Interconnection Customer shall pay Transmission Provider, for the benefit of the Interconnected Transmission Owner and upon presentation by Interconnected Transmission Owner of reasonable and appropriate documentation thereof, any amounts expended by the Interconnected Transmission Owner for such materials, supplies and equipment that Interconnection Customer has not already paid. Title to all Transmission Owner Interconnection Facilities constructed by Interconnection Customer under this Section 3.5 shall be transferred to the Interconnected Transmission Owner in accordance with Section 5.5 of this Appendix 2.

3.6 Suspension of Work Upon Default:

Upon the occurrence of a Default by Interconnection Customer as defined in Section 13 of this Appendix 2, the Transmission Provider or the Interconnected Transmission Owner may by written notice to Interconnection Customer suspend further work associated with the construction and installation of the Transmission Owner Interconnection Facilities that the Interconnected Transmission Owner is responsible for constructing. Such suspension shall not constitute a waiver of any termination rights under this Interconnection Construction Service Agreement. In the event of a suspension by Transmission Provider or Interconnected

Transmission Owner, the Interconnection Customer shall be responsible for the Costs incurred in connection with any suspension hereunder in accordance with Section 14.3 of this Appendix 2.

3.7 Construction Reports:

Each Constructing Entity shall issue reports to each other Construction Party on a monthly basis, and at such other times as reasonably requested, regarding the status of the construction and installation of the Interconnection Facilities. Each Construction Party shall promptly identify, and shall notify each other Construction Party of, any event that the Construction Party reasonably expects may delay completion, or may significantly increase the cost, of the Interconnection Facilities. Should a Construction Party report such an event, Transmission Provider shall, within fifteen days of such notification, convene a technical meeting of the Construction Parties to evaluate schedule alternatives.

3.8 Inspection and Testing of Completed Facilities

3.8.1 Coordination:

Interconnection Customer and the Interconnected Transmission Owner shall coordinate the timing and schedule of all inspection and testing of the Interconnection Facilities.

3.8.2 Inspection and Testing:

Each Constructing Entity shall cause inspection and testing of the Interconnection Facilities that it constructs in accordance with the provisions of this section. The Construction Parties acknowledge and agree that inspection and testing of facilities may be undertaken as facilities are completed and need not await completion of all of the facilities that a Constructing Entity is building.

3.8.2.1 Of Interconnection Customer-Built Facilities:

Upon the completion of the construction and installation, but prior to energization, of any Interconnection Facilities constructed by the Interconnection Customer and related portions of the Customer Facility, the Interconnection Customer shall have the same inspected and/or tested by an authorized electric inspection agency or qualified third party reasonably acceptable to the Interconnected Transmission Owner to assess whether the facilities substantially comply with Applicable Standards. Said inspection and testing shall be held on a mutually agreed-upon date, and the Interconnected Transmission Owner and Transmission Provider shall have the right to attend and observe, and to obtain the written results of, such testing.

3.8.2.2 Of Interconnected Transmission Owner-Built Facilities:

Upon the completion of the construction and installation, but prior to energization, of any Interconnection Facilities constructed by the Interconnected Transmission Owner, the Interconnected Transmission Owner shall have the same inspected and/or tested by qualified personnel or a qualified contractor to assess whether the facilities substantially comply with

Applicable Standards. Subject to Applicable Laws and Regulations, said inspection and testing shall be held on a mutually agreed-upon date, and the Interconnection Customer and Transmission Provider shall have the right to attend and observe, and to obtain the written results of, such testing.

3.8.3 Review of Inspection and Testing by Interconnected Transmission Owner:

In the event that the written report, or the observation of either Constructing Entity or Transmission Provider, of the inspection and/or testing pursuant to Section 3.8.2 of this Appendix 2 reasonably leads the Transmission Provider or Interconnected Transmission Owner to believe that the inspection and/or testing of some or all of the Interconnection Facilities built by the Interconnection Customer was inadequate or otherwise deficient, the Interconnected Transmission Owner may, within 20 days after its receipt of the results of inspection or testing and upon reasonable notice to the Interconnection Customer, perform its own inspection and/or testing of such Interconnection Facilities to determine whether the facilities are acceptable for energization, which determination shall not be unreasonably delayed, withheld or conditioned.

3.8.4 Notification and Correction of Defects

3.8.4.1 If the Interconnected Transmission Owner, based on inspection or testing pursuant to Section 3.8.2 or 3.8.3 of this Appendix 2, identifies any defects or failures to comply with Applicable Standards in the Interconnection Facilities constructed by the Interconnection Customer, the Interconnected Transmission Owner shall notify the Interconnection Customer and Transmission Provider of any identified defects or failures within 20 days after the Interconnected Transmission Owner's receipt of the results of such inspection or testing. The Interconnection Customer shall take appropriate actions to correct any such defects or failure at its sole cost and expense, and shall obtain the Interconnected Transmission Owner's acceptance of the corrections, which acceptance shall not be unreasonably delayed, withheld or conditioned.

3.8.4.2 In the event that inspection and/or testing of any Transmission Owner Interconnection Facilities built by the Interconnected Transmission Owner identifies any defects or failures to comply with Applicable Standards in such facilities, Interconnected Transmission Owner shall take appropriate action to correct any such defects or failures within 20 days after it learns thereof. In the event that such a defect or failure cannot reasonably be corrected within such 20-day period, Interconnected Transmission Owner shall commence the necessary correction within that time and shall thereafter diligently pursue it to completion.

3.8.5 Notification of Results:

Within 10 days after satisfactory inspection and/or testing of Interconnection Facilities built by the Interconnection Customer (including, if applicable, inspection and/or testing after correction of defects or failures), the Interconnected Transmission Owner shall confirm in writing to the Interconnection Customer and Transmission Provider that the successfully inspected and tested facilities are acceptable for energization.

3.9 Energization of Completed Facilities

(A) Unless otherwise provided in the Schedule of Work, energization of the Interconnection Facilities related to interconnection of a Generation Interconnection Customer and, when applicable as determined by Transmission Provider, of the Interconnection Facilities related to interconnection of a Transmission Interconnection Customer, shall occur in two stages. Stage One energization shall consist of energization of the Customer Interconnection Facilities and of the Transmission Owner Attachment Facilities and will occur prior to initial energization of the Customer Facility. Stage Two energization shall consist of (1) initial synchronization to the Transmission System of any completed generator(s) at the Customer Facility of a Generation Interconnection Customer, or of applicable facilities, as determined by the Transmission Provider, associated with Merchant Transmission Facilities of a Transmission Interconnection Customer, and (2) energization of the remainder of the Transmission Owner Interconnection Facilities. Stage Two energization shall be completed prior to Initial Operation of the Customer Facility.

(B) In the case of Interconnection Facilities related to interconnection of a Transmission Interconnection Customer for which the Transmission Provider determines that two-stage energization is inapplicable, energization shall occur in a single stage, consisting of energization of the Interconnection Facilities and the Customer Facility. Such a single-stage energization shall be regarded as Stage Two energization for the purposes of the remaining provisions of this Section 3.9 and of Section 5.5 of this Appendix 2.

3.9.1

Stage One energization of the Interconnection Facilities may not occur prior to the satisfaction of the following additional conditions:

(a) The Interconnection Customer shall have delivered to the Interconnected Transmission Owner and Transmission Provider a writing transferring to the Interconnected Transmission Owner and Transmission Provider operational control over any Transmission Owner Attachment Facilities that Interconnection Customer has constructed; and

(b) The Interconnection Customer shall have provided a mark-up of construction drawings to the Interconnected Transmission Owner to show the "as-built" condition of all Transmission Owner Attachment Facilities that Interconnection Customer has constructed.

3.9.2 As soon as practicable after the satisfaction of the conditions for Stage One energization specified in Sections 3.8 and 3.9.1 of this Appendix 2, the Interconnected Transmission Owner and the Interconnection Customer shall coordinate and undertake the Stage One energization of facilities.

3.9.3 Stage Two energization of the Interconnection Facilities may not occur prior to the satisfaction of the following additional conditions:

(a) The Interconnection Customer shall have delivered to the Interconnected Transmission Owner and Transmission Provider a writing transferring to the Interconnected Transmission Owner and Transmission Provider operational control over any Transmission

Owner Interconnection Facilities that Interconnection Customer has constructed and operational control of which it has not previously transferred pursuant to Section 3.9.1 of this Appendix 2; and

(b) The Interconnection Customer shall have provided a mark-up of construction drawings to the Interconnected Transmission Owner to show the "as-built" condition of all Transmission Owner Interconnection Facilities that Interconnection Customer has constructed and which were not included in the Stage One energization, but are included in the Stage Two energization.

(c) Telemetering systems shall be operational and shall be providing Transmission Provider and the Interconnected Transmission Owner with telemetered data as specified pursuant to Section 8.5.2 of Appendix 2 to the Interconnection Service Agreement.

3.9.4 As soon as practicable after the satisfaction of the conditions for Stage Two energization specified in Sections 3.8 and 3.9.3 of this Appendix 2, the Interconnected Transmission Owner and the Interconnection Customer shall coordinate and undertake the Stage Two energization of facilities.

3.9.5 To the extent defects in any Interconnection Facilities are identified during the energization process, the energization will not be deemed successful. In that event, the Constructing Entity shall take action to correct such defects in any Interconnection Facilities that it built as promptly as practical after the defects are identified. The affected Constructing Entity shall so notify the other Construction Parties when it has corrected any such defects, and the Constructing Entities shall recommence efforts, within 10 days thereafter, to energize the appropriate Interconnection Facilities in accordance with Section 3.9; provided that the Interconnected Transmission Owner may, in the reasonable exercise of its discretion and with the approval of Transmission Provider, require that further inspection and testing be performed in accordance with Section 3.8 of this Appendix 2.

3.10 Interconnected Transmission Owner's Acceptance of Facilities Constructed by Interconnection Customer:

Within five days after determining that Interconnection Facilities have been successfully energized, the Interconnected Transmission Owner shall issue a written notice to the Interconnection Customer accepting the Interconnection Facilities built by the Interconnection Customer that were successfully energized. Such acceptance shall not be construed as confirming, endorsing or providing a warranty by the Interconnected Transmission Owner as to the design, installation, construction, fitness, safety, durability or reliability of any Interconnection Facilities built by the Interconnection Customer, or their compliance with Applicable Standards.

4 Transmission Outages

4.1 Outages; Coordination:

The Construction Parties acknowledge and agree that certain outages of transmission facilities owned by the Interconnected Transmission Owner, as more specifically detailed in the Scope of Work, may be necessary in order to complete the process of constructing and installing all Interconnection Facilities. The Construction Parties further acknowledge and agree that any such outages shall be coordinated by and through the Transmission Provider.

5 Land Rights; Transfer of Title

5.1 Grant of Easements and Other Land Rights:

Interconnection Customer at its sole cost and expense, shall grant such easements and other land rights to the Interconnected Transmission Owner over the Site at such times and in such a manner as the Interconnected Transmission Owner may reasonably require to perform its obligations under this Appendix 2 and/or to perform its operation and maintenance obligations under the Interconnection Service Agreement.

5.2 Construction of Facilities on Interconnection Customer Property:

To the extent that the Interconnected Transmission Owner is required to construct and install any Transmission Owner Interconnection Facilities on land owned by the Interconnection Customer, the Interconnection Customer, at its sole cost and expense, shall legally transfer to the Interconnected Transmission Owner all easements and other land rights required pursuant to Section 5.1 above prior to the commencement of such construction and installation.

5.3 Third Parties:

If any of the easements and other land rights described in Section 5.1 above must be obtained from a third party, the Interconnected Transmission Owner's obligation for completing its construction responsibilities in accordance with the Schedule of Work, to the extent of the facilities that it is responsible for constructing for which such easements and land rights are necessary, shall be subject to Interconnection Customer's acquisition of such easements and other land rights at such times and in such manner as the Interconnected Transmission Owner may reasonably require to perform its obligations under this Appendix 2, and/or to perform its operation and maintenance obligations under the Interconnection Service Agreement, provided, however, that upon Interconnection Customer's request, the Interconnected Transmission Owner shall assist the Interconnection Customer in acquiring such land rights with efforts similar in nature and extent to those that the Interconnected Transmission Owner typically undertakes in acquiring land rights for construction of facilities on its own behalf. The terms of easements and land rights acquired by Interconnection Customer shall not unreasonably impede the Interconnected Transmission Owner's timely completion of construction of the affected facilities.

5.4 Documentation:

Interconnection Customer shall prepare, execute and file such documentation as the Interconnected Transmission Owner may reasonably require to memorialize any easements and

other land rights granted pursuant to this Section 5. Documentation of such easements and other land rights, and any associated filings, shall be in a form acceptable to the Interconnected Transmission Owner.

5.5 Transfer of Title to Certain Facilities Constructed By Interconnection Customer:

Within thirty (30) days after the Interconnection Customer's receipt of notice of acceptance under Section 3.10 of this Appendix 2 following Stage Two energization of the Interconnection Facilities, the Interconnection Customer shall deliver to the Interconnected Transmission Owner, for the Interconnected Transmission Owner's review and approval, all of the documents and filings necessary to transfer to the Interconnected Transmission Owner title to any Transmission Owner Interconnection Facilities constructed by the Interconnection Customer, and to convey to the Interconnected Transmission Owner any easements and other land rights to be granted by Interconnection Customer in accordance with Section 5.1 above that have not then already been conveyed. The Interconnected Transmission Owner shall review and approve such documentation, such approval not to be unreasonably withheld, delayed, or conditioned. Within 30 days after its receipt of the Interconnected Transmission Owner's written notice of approval of the documentation, the Interconnection Customer, in coordination and consultation with the Interconnected Transmission Owner, shall make any necessary filings at the FERC or other governmental agencies for regulatory approval of the transfer of title. Within twenty (20) days after the issuance of the last order granting a necessary regulatory approval becomes final (i.e., is no longer subject to rehearing), the Interconnection Customer shall execute all necessary documentation and shall make all necessary filings to record and perfect the Interconnected Transmission Owner's title in such facilities and in the easements and other land rights to be conveyed to the Interconnected Transmission Owner. Prior to such transfer to the Interconnected Transmission Owner of title to the Transmission Owner Interconnection Facilities built by the Interconnection Customer, the risk of loss or damages to, or in connection with, such facilities shall remain with the Interconnection Customer. Transfer of title to facilities under this section shall not affect the Interconnection Customer's receipt or use of the interconnection rights related to Network Upgrades and/or Local Upgrades for which it otherwise may be eligible as provided in Subpart C of Part VI of the Tariff.

5.6 Liens:

The Interconnection Customer shall take all reasonable steps to ensure that, at the time of transfer of title in the Transmission Owner Interconnection Facilities built by the Interconnection Customer to the Interconnected Transmission Owner, those facilities shall be free and clear of any and all liens and encumbrances, including mechanics' liens. To the extent that the Interconnection Customer cannot reasonably clear a lien or encumbrance prior to the time for transferring title to the Interconnected Transmission Owner, Interconnection Customer shall nevertheless convey title subject to the lien or encumbrance and shall indemnify, defend and hold harmless the Interconnected Transmission Owner against any and all claims, costs, damages, liabilities and expenses (including without limitation reasonable attorneys' fees) which may be brought or imposed against or incurred by Interconnected Transmission Owner by reason of any such lien or encumbrance or its discharge.

6 Warranties

6.1 Interconnection Customer Warranty:

The Interconnection Customer shall warrant that its work (or the work of any subcontractor that it retains) in constructing and installing the Transmission Owner Interconnection Facilities that it builds is free from defects in workmanship and design and shall conform to the requirements of this Interconnection Construction Service Agreement for one (1) year (the "Interconnection Customer Warranty Period") commencing upon the date title is transferred to Interconnected Transmission Owner in accordance with Section 5.5 of this Appendix 2. The Interconnection Customer shall, at its sole expense and promptly after notification by the Interconnected Transmission Owner, correct or replace defective work in accordance with Applicable Technical Requirements and Standards, during the Interconnection Customer Warranty Period. The warranty period for such corrected or replaced work shall be the unused portion of the Interconnection Customer Warranty Period remaining as of the date of notice of the defect. The Interconnection Customer Warranty Period shall resume upon acceptance of such corrected or replaced work. All Costs incurred by Interconnected Transmission Owner as a result of such defective work shall be reimbursed to the Interconnected Transmission Owner by the Interconnection Customer on demand; provided that the Interconnected Transmission Owner submits the demand to the Interconnection Customer within the Interconnection Customer Warranty Period and provides reasonable documentation of the claimed costs. The Interconnected Transmission Owner's acceptance, inspection and testing, or a third party's inspection or testing, of such facilities pursuant to Section 3.8 of this Appendix 2 shall not be construed to limit in any way the warranty obligations of the Interconnection Customer.

6.2 Manufacturer Warranties:

Prior to the transfer to the Interconnected Transmission Owner of title to the Transmission Owner Interconnection Facilities built by the Interconnection Customer, the Interconnection Customer shall produce documentation satisfactory to the Interconnected Transmission Owner evidencing the transfer to the Interconnected Transmission Owner of all manufacturer warranties for equipment and/or materials purchased by the Interconnection Customer for use and/or installation as part of the Transmission Owner Interconnection Facilities built by the Interconnection Customer.

7 [Reserved.]

8 [Reserved.]

9 Security, Billing And Payments

The following provisions shall apply with respect to charges for the Costs of the Interconnected Transmission Owner for which the Interconnection Customer is responsible.

9.1 Adjustments to Security:

The Security provided by Interconnection Customer at or before execution of the Interconnection Service Agreement (a) shall be reduced as portions of the work on required Local Upgrades and/or Network Upgrades is completed, and/or (b) shall be increased or decreased as required to reflect adjustments to Interconnection Customer's cost responsibility, as determined in accordance with Section 217, to correspond with changes in the Scope of Work developed in accordance with Transmission Provider's scope change process for interconnection projects set forth in the PJM Manuals.

9.2 Invoice:

The Interconnected Transmission Owner shall provide Transmission Provider a quarterly statement of the Interconnected Transmission Owner's scheduled expenditures during the next three months for, as applicable, (a) the design, engineering and construction of, and/or for other charges related to, construction of the Interconnection Facilities for which the Interconnected Transmission Owner is responsible under this Interconnection Construction Service Agreement, or (b) in the event that the Interconnection Customer exercises the Option to Build pursuant to Section 3.2.3.1 of this Appendix 2, for the Interconnected Transmission Owner's Costs associated with the Interconnection Customer's building Attachment Facilities, Local Upgrades and Network Upgrades (including both Direct Connection Network Upgrades, Direct Connection Local Upgrades, Non-Direct Connection Network Upgrades and Non-Direct Connection Local Upgrades), including but not limited to Costs for tie-in work and Cancellation Costs. Provided, however, such Interconnected Transmission Owner Costs may include oversight costs (i.e. costs incurred by the Interconnected Transmission Owner when engaging in oversight activities to satisfy itself that the Interconnection Customer is complying with the Interconnected Transmission Owner's standards and specifications for the construction of facilities) only if the Interconnected Transmission Owner and the Interconnection Customer mutually agree to the inclusion of such costs under the Option to Build pursuant to the provisions of Section 3.3.3.1 of this Appendix. Transmission Provider shall bill Interconnection Customer on behalf of the Interconnected Transmission Owner, for the Interconnected Transmission Owner's expected Costs during the subsequent three months. Interconnection Customer shall pay each bill within twenty (20) days after receipt thereof. Upon receipt of each of Interconnection Customer's payments of such bills, Transmission Provider shall reimburse the Interconnected Transmission Owner. Interconnection Customer may request that the Transmission Provider provide a quarterly cost reconciliation. Such a quarterly cost reconciliation will have a one-quarter lag, e.g., reconciliation of costs for the first calendar quarter of work will be provided at the start of the third calendar quarter of work, provided, however, that Section 9.3 of this Appendix 2 shall govern the timing of the final cost reconciliation upon completion of the work.

9.3 Final Invoice:

Within 120 days after the Interconnected Transmission Owner completes construction and installation of the Interconnection Facilities for which the Interconnected Transmission Owner is responsible under this Interconnection Construction Service Agreement, Transmission Provider shall provide Interconnection Customer with an accounting of, and the appropriate Construction Party shall make any payment to the other that is necessary to resolve, any difference between (a) Interconnection Customer's responsibility under the Tariff for the actual Cost of such

facilities, and (b) Interconnection Customer's previous aggregate payments to Transmission Provider for the Costs of such facilities. Notwithstanding the foregoing, however, Transmission Provider shall not be obligated to make any payment to either the Interconnection Customer or the Interconnected Transmission Owner that the preceding sentence requires it to make unless and until the Transmission Provider has received the payment that it is required to refund from the Construction Party owing the payment.

9.4 Disputes:

In the event of a billing dispute between any of the Construction Parties, Transmission Provider and the Interconnected Transmission Owner shall continue to perform their respective obligations pursuant to this Interconnection Construction Service Agreement so long as (a) Interconnection Customer continues to make all payments not in dispute, and (b) the Security held by the Transmission Provider while the dispute is pending exceeds the amount in dispute, or (c) Interconnection Customer pays to Transmission Provider or into an independent escrow account the portion of the invoice in dispute, pending resolution of such dispute. If Interconnection Customer fails to meet any of these requirements, then Transmission Provider shall so inform the other Construction Parties and Transmission Provider or the Interconnected Transmission Owner may provide notice to Interconnection Customer of a Breach pursuant to Section 13 of this Appendix 2.

9.5 Interest:

Interest on any unpaid, delinquent amounts shall be calculated in accordance with the methodology specified for interest on refunds in the FERC's regulations at 18 C.F.R. Section 35.19a(a)(2)(iii) and shall apply from the due date of the bill to the date of payment.

9.6 No Waiver:

Payment of an invoice shall not relieve Interconnection Customer from any other responsibilities or obligations it has under this Interconnection Construction Service Agreement, nor shall such payment constitute a waiver of any claims arising hereunder.

10 Assignment

10.1 Assignment with Prior Consent:

Except as provided in Section 10.2 below, no Construction Party shall assign its rights or delegate its duties, or any part of such rights or duties, under the Interconnection Construction Service Agreement without the written consent of the other Construction Parties, which consent shall not be unreasonably withheld, conditioned or delayed. Any such assignment or delegation made without such written consent shall be null and void. A Construction Party may make an assignment in connection with the sale, merger, or transfer of a substantial portion or all of its properties, including the Interconnection Facilities which it will own upon completion of construction and the transfer of title required by Section 5 of this Appendix 2, so long as the assignee in such a sale, merger, or transfer assumes in writing all rights, duties and obligations

arising under this Interconnection Construction Service Agreement. In addition, the Interconnected Transmission Owner shall be entitled, subject to Applicable Laws and Regulations, to assign the Interconnection Construction Service Agreement to any Affiliate or successor that owns and operates all or a substantial portion of the Interconnected Transmission Owner's transmission facilities.

10.2 Assignment Without Prior Consent

10.2.1 Assignment to Owners:

Interconnection Customer may assign the Interconnection Construction Service Agreement without the Interconnected Transmission Owner's or Transmission Provider's prior consent to any Affiliate or person that purchases or otherwise acquires, directly or indirectly, all or substantially all of the Customer Facility and the Customer Interconnection Facilities, provided that prior to the effective date of any such assignment, the assignee shall demonstrate that, as of the effective date of the assignment, the assignee has the technical competence to comply with the requirements of this Appendix 2 and assumes in a writing provided to the Interconnected Transmission Owner and Transmission Provider all rights, duties, and obligations of Interconnection Customer arising under this Appendix 2. However, any assignment described herein shall not relieve or discharge the Interconnection Customer from any of its obligations hereunder absent the written consent of the Interconnected Transmission Owner, such consent not to be unreasonably withheld, conditioned or delayed.

10.2.2 Assignment to Lenders:

Interconnection Customer may, without the consent of the Transmission Provider or the Interconnected Transmission Owner, assign the Interconnection Construction Service Agreement to any Project Finance Entity(ies), provided that such assignment shall not alter or diminish Interconnection Customer's duties and obligations under this Interconnection Construction Service Agreement. If Interconnection Customer provides the Interconnected Transmission Owner with notice of an assignment to any Project Finance Entity(ies) and identifies such Project Finance Entities as contacts for notice purposes pursuant to Section 20 of this Appendix 2, the Transmission Provider or Interconnected Transmission Owner shall provide notice and reasonable opportunity for such entity(ies) to cure any Breach under this Appendix 2 in accordance with this Appendix 2. Transmission Provider or Interconnected Transmission Owner shall, if requested by such lenders, provide such customary and reasonable documents, including consents to assignment, as may be reasonably requested with respect to the assignment and status of the Interconnection Construction Service Agreement, provided that such documents do not alter or diminish the rights of the Transmission Provider or Interconnected Transmission Owner under this Appendix 2, except with respect to providing notice of Breach to a Project Finance Entity. Upon presentation of the Transmission Provider's and/or the Interconnected Transmission Owner's invoice therefor, Interconnection Customer shall pay the Transmission Provider and/or the Interconnected Transmission Owner's reasonable documented cost of providing such documents and certificates. Any assignment described herein shall not relieve or discharge the Interconnection Customer from any of its obligations hereunder absent the written consent of the Interconnected Transmission Owner and Transmission Provider.

10.3 Successors and Assigns:

This Interconnection Construction Service Agreement and all of its provisions are binding upon, and inure to the benefit of, the Construction Parties and their respective successors and permitted assigns.

11 Insurance

11.1 Required Coverages For Generation Resources Of More Than 20 Megawatts or Merchant Transmission Facilities:

Each Constructing Entity shall maintain, at its own expense, insurance as described in paragraphs A through E below. All insurance shall be procured from insurance companies rated "A-," VII or better by AM Best and authorized to do business in a state or states in which the Interconnection Facilities will be located. Failure to maintain required insurance shall be a Breach of the Interconnection Construction Service Agreement.

A. Workers Compensation Insurance with statutory limits, as required by the state and/or jurisdiction in which the work is to be performed, and employer's liability insurance with limits of not less than one million dollars ($1,000,000).

B. Commercial General Liability Insurance and/or Excess Liability Insurance covering liability arising out of premises, operations, personal injury, advertising , products and completed operations coverage, independent contractors coverage, liabililty assumed under an insured contract, coverage for pollution to the extent normally available and punitive damages to the extent allowable under applicable law, with limits of not less than one million dollars ($1,000,000) per occurrence/one million dollars ($1,000,000) general aggregate/one million dollars ($1,000,000) products and completed operations aggregate.

C. Business/Commercial Automobile Liability Insurance for coverage of owned and non-owned and hired vehicles, trailers or semi-trailers designed for travel on public roads, with a minimum, combined single limit of not less than one million dollars ($1,000,000) each accident for bodily injury, including death, and property damage.

D. Excess and/or Umbrella Liability Insurance with a limit of liability of twenty million dollars ($20,000,000.00) per occurrence. These limits apply in excess of the employer's liability, commercial general liability and business/commercial automobile liability coverages described above. This requirement can be met alone or via a combination of primary, excess and/or umbrella insurance.

E. Professional Liability, including Contractors Legal Liability, providing errors, omissions and/or malpractice coverage. Coverage shall be provided for the Constructing Entity's duties, responsibilities and performance outlined in this Interconnection Construction Service Agreement, with limits of liability as follows:

$10,000,000 each occurrence
$10,000,000 aggregate

An Interconnected Entity may meet the Professional Liability Insurance requirements by requiring third-party contractors, designers, or engineers, or other parties that are responsible for design work associated with the transmission facilities or Interconnection Facilities necessary for the interconnection to procure professional liability insurance in the amounts and upon the terms prescribed by this section 11.1(E), and providing evidence of such insurance to the other Interconnected Entity. Such insurance shall be procured from companies rated "A-," VII or better by AM Best and authorized to do business in a state or states in which the Interconnection Facilities are located. Nothing in this section relieves the Interconnected Entity from complying with the insurance requirements. In the event that the policies of the designers, engineers, or other parties used to satisfy the Interconnected Entity's insurance obligations under this section become invalid for any reason, including but not limited to, (i) the policy(ies) lapsing or otherwise terminating or expiring; (ii) the coverage limits of such policy(ies) are decreased; or (iii) the policy(ies) do not comply with the terms and conditions of the Tariff; Interconnected Entity shall be required to procure insurance sufficient to meet the requirements of this section, such that there is no lapse in insurance coverage. Notwithstanding the foregoing, in the event an Interconnected Entity will not design or construct or cause to design or construct any new transmission facilities or Interconnection Facilities, Transmission Provider, in its discretion, may waive the requirement that an Interconnected Entity maintain the Professional Liability Insurance pursuant to this section.

11.1A. Required Coverages For Generation Resources Of 20 Megawatts Or Less:

Each Constructing Entity shall maintain the types of insurance as described in section 11.1 paragraphs A through E above in an amount sufficient to insure against all reasonably foreseeable direct liabilities given the size and nature of the generating equipment being interconnected, the interconnection itself, and the characteristics of the system to which the interconnection is made. Additional insurance may be required by the Interconnection Customer, as a function of owning and operating a generating facility. All insurance shall be procured from insurance companies rated "A-," VII or better by AM Best and authorized to do business in a state or states in which the Interconnection Facilities are located. Failure to maintain required insurance shall be a Breach of the Interconnection Construction Service Agreement.

11.2 Additional Insureds:

The Commercial General Liability, Business/Commercial Automobile Liability and Excess and/or Umbrella Liability policies procured by each Constructing Entity (the "Insuring Constructing Entity") shall include each other Construction Party (the "Insured Construction Party"), its officers, agents and employees as additional insureds, providing all standard coverages and covering liability of the Insured Construction Party arising out of bodily injury and/or property damage (including loss of use) in any way connected with the operations, performance, or lack of performance under this Interconnection Construction Service Agreement.

11.3 Other Required Terms:

The above-mentioned insurance policies (except workers' compensation) shall provide the following:

(a) Each policy shall contain provisions that specify that it is primary and non contributory for any liability arising out of that party's negligence and shall apply to such extent without consideration for other policies separately carried and shall state that each insured is provided coverage as though a separate policy had been issued to each, except the insurer's liability shall not be increased beyond the amount for which the insurer would have been liable had only one insured been covered. Each Insuring Constructing Entity shall be responsible for its respective deductibles or retentions.

(b) If any coverage is written on a Claims First Made Basis, continuous coverage shall be maintained or an extended discovery period will be exercised for a period of not less than two (2) years after termination of the Interconnection Construction Service Agreement.

(c) Provide for a waiver of all rights of subrogation which the Insuring Constructing Entity's insurance carrier might exercise against the Insured Construction Party.

11.3A No Limitation of Liability:

The requirements contained herein as to the types and limits of all insurance to be maintained by the Constructing Entities are not intended to and shall not in any manner, limit or qualify the liabilities and obligations assumed by the Construction Parties under the Interconnection Construction Service Agreement.

11.4 Self-Insurance:

Notwithstanding the foregoing, each Constructing Entity may self-insure to meet the minimum insurance requirements of this Section 11 to the extent it maintains a self-insurance program; provided that such Constructing Entity's senior secured debt is rated at investment grade or better by Standard & Poor's and its self-insurance program meets the minimum insurance requirements of this Section 11. For any period of time that a Constructing Entity's senior secured debt is unrated by Standard & Poor's or is rated at less than investment grade by Standard & Poor's, it shall comply with the insurance requirements applicable to it under this Section 11. In the event that a Constructing Entity is permitted to self-insure pursuant to this section, it shall notify the other Construction Parties that it meets the requirements to self-insure and that its self-insurance program meets the minimum insurance requirements in a manner consistent with that specified in Section 11.5.

11.5 Notices; Certificates of Insurance:

Prior to the commencement of work pursuant to this Agreement, the Constructing Entities agree to furnish each other Construction Party with certificates of insurance evidencing the insurance

coverage obtained in accordance with this Section 11. All certificates of insurance shall indicate that the certificate holder is included as an additional insured under the Commercial General Liability, Business/Commercial Automobile Liability and Excess and/or Umbrella Liability coverages, and that this insurance is primary with a waiver of subrogation in favor of the other Interconnected Entities. All policies of insurance shall provide for thirty days prior written notice of cancellation or material adverse change. If the policies of insurance do not or cannot be endorsed to provide thirty days prior written ntoice of cancellation or material adverse change, each Construction Entity shall provide the other Construction Entities with thirty days prior written notice of cancellation or material adverse change to any of the insurance required in this agreement.

11.6 Subcontractor Insurance:

In accord with Good Utility Practice, each Constructing Entity shall require each of its subcontractors to maintain and provide evidence of insurance coverage of types, and in amounts, commensurate with the risks associated with the services provided by the subcontractor. Bonding of contractors or subcontractors shall be at the hiring Constructing Entity's discretion, but regardless of bonding, the hiring principal shall be responsible for the performance or non-performance of any contractor or subcontractor it hires.

11.7 Reporting Incidents:

The Construction Parties shall report to each other in writing as soon as practical all accidents or occurrences resulting in injuries to any person, including death, and any property damage arising out of the Interconnection Construction Service Agreement.

12 Indemnity

12.1 Indemnity:

Each Constructing Entity shall indemnify and hold harmless the other Construction Parties, and the other Construction Parties' officers, shareholders, stakeholders, members, managers, representatives, directors, agents and employees, and Affiliates, from and against any and all loss, liability, damage, cost or expense to third parties, including damage and liability for bodily injury to or death of persons, or damage to property of persons (including reasonable attorneys' fees and expenses, litigation costs, consultant fees, investigation fees, sums paid in settlements of claims, penalties or fines imposed under Applicable Laws and Regulations, and any such fees and expenses incurred in enforcing this indemnity or collecting any sums due hereunder) (collectively, "Loss") to the extent arising out of, in connection with or resulting from (i) the indemnifying Constructing Entity's breach of any of the representations or warranties made in, or failure of the indemnifying Constructing Entity or any of its subcontractors to perform any of its obligations under, this Appendix 2, or (ii) the negligence or willful misconduct of the indemnifying Constructing Entity or its contractors; provided, however, that neither Constructing Entity shall have any indemnification obligations under this Section 12.1 in respect of any Loss to the extent the Loss results from the negligence or willful misconduct of the Construction Party seeking indemnity.

12.2 Indemnity Procedures:

Promptly after receipt by a Person entitled to indemnity ("Indemnified Person") of any claim or notice of the commencement of any action or administrative or legal proceeding or investigation as to which the indemnity provided for in Section 12.1 above may apply, the Indemnified Person shall notify the indemnifying Constructing Entity of such fact. Any failure of or delay in such notification shall not affect a Constructing Entity's indemnification obligation unless such failure or delay is materially prejudicial to the indemnifying Constructing Entity. The Indemnified Person shall cooperate with the indemnifying Constructing Entity with respect to the matter for which indemnification is claimed. The indemnifying Constructing Entity shall have the right to assume the defense thereof with counsel designated by such indemnifying Constructing Entity and reasonably satisfactory to the Indemnified Person. If the defendants in any such action include one or more Indemnified Persons and the indemnifying Constructing Entity and if the Indemnified Person reasonably concludes that there may be legal defenses available to it and/or other Indemnified Persons which are different from or additional to those available to the indemnifying Constructing Entity, the Indemnified Person shall have the right to select separate counsel to assert such legal defenses and to otherwise participate in the defense of such action on its own behalf. In such instances, the indemnifying Constructing Entity shall only be required to pay the fees and expenses of one additional attorney to represent an Indemnified Person or Indemnified Persons having such differing or additional legal defenses. The Indemnified Person shall be entitled, at its expense, to participate in any action, suit or proceeding, the defense of which has been assumed by the indemnifying Constructing Entity. Notwithstanding the foregoing, the indemnifying Constructing Entity (i) shall not be entitled to assume and control the defense of any such action, suit or proceedings if and to the extent that, in the opinion of the Indemnified Person and its counsel, such action, suit or proceeding involves the potential imposition of criminal liability on the Indemnified Person, or there exists a conflict or adversity of interest between the Indemnified Person and the indemnifying Constructing Entity, in such event the indemnifying Constructing Entity shall pay the reasonable expenses of the Indemnified Person, and (ii) shall not settle or consent to the entry of any judgment in any action, suit or proceeding without the consent of the Indemnified Person, which shall not be unreasonably withheld, conditioned or delayed.

12.3 Indemnified Person:

If an Indemnified Person is entitled to indemnification under this Section 12 as a result of a claim by a third party, and the indemnifying Constructing Entity fails, after notice and reasonable opportunity to proceed under Section 12.2, to assume the defense of such claim, such Indemnified Person may at the expense of the indemnifying Constructing Entity contest, settle or consent to the entry of any judgment with respect to, or pay in full, such claim.

12.4 Amount Owing:

If an indemnifying Constructing Entity is obligated to indemnify and hold any Indemnified Person harmless under this Section 12, the amount owing to the Indemnified Person shall be the amount of such Indemnified Person's actual Loss, net of any insurance or other recovery.

12.5 Limitation on Damages:

Except as otherwise provided in this Section 12, the liability of a Construction Party under this Appendix 2 shall be limited to direct actual damages, and all other damages at law are waived. Under no circumstances shall any Construction Party or its Affiliates, directors, officers, employees and agents, or any of them, be liable to another Construction Party, whether in tort, contract or other basis in law or equity for any special, indirect, punitive, exemplary or consequential damages, including lost profits. The limitations on damages specified in this Section 12.5 are without regard to the cause or causes related thereto, including the negligence of any Construction Party, whether such negligence be sole, joint or concurrent, or active or passive. This limitation on damages shall not affect any Construction Party's rights to obtain equitable relief as otherwise provided in this Appendix 2. The provisions of this Section 12.5 shall survive the termination or expiration of the Interconnection Construction Service Agreement.

12.6 Limitation of Liability in Event of Breach:

A Construction Party ("Breaching Party") shall have no liability hereunder to any other Construction Party, and each other Construction Party hereby releases the Breaching Party, for all claims or damages it incurs that are associated with any interruption in the availability of the Customer Facility, the Interconnection Facilities, Transmission System or Construction Service or damages to a Construction Party's facilities, except to the extent such interruption or damage is caused by the Breaching Party's gross negligence or willful misconduct in the performance of its obligations under this Interconnection Construction Service Agreement.

12.7 Limited Liability in Emergency Conditions:

Except as otherwise provided in the Tariff or the Operating Agreement, no Construction Party shall be liable to any other Construction Party for any action that it takes in responding to an Emergency Condition, so long as such action is made in good faith, is consistent with Good Utility Practice and is not contrary to the directives of the Transmission Provider or the Interconnected Transmission Owner with respect to such Emergency Condition. Notwithstanding the above, Interconnection Customer shall be liable in the event that it fails to comply with any instructions of Transmission Provider or the Interconnected Transmission Owner related to an Emergency Condition.

13 Breach, Cure And Default

13.1 Breach:

A Breach of the Interconnection Construction Service Agreement shall include:

(a) The failure to pay any amount when due;

(b) The failure to comply with any material term or condition of this Interconnection Construction Service Agreement including but not limited to any material breach of a representation, warranty or covenant (other than in Sections 13.1(a) and (c)-(e) hereof) made in this Appendix 2;

(c) Assignment of the Interconnection Construction Service Agreement in a manner inconsistent with the terms of this Appendix 2;

(d) Failure of a Constructing Entity to provide access rights, or a Constructing Entity's attempt to revoke or terminate access rights, that are provided under this Appendix 2; or

(e) Failure of any Construction Party to provide information or data required to be provided to another Construction Party under this Appendix 2 for such other Construction Party to satisfy its obligations under this Interconnection Construction Service Agreement.

13.2 Notice of Breach:

A Construction Party not in Breach of this Interconnection Construction Service Agreement shall give written notice of an event of Breach to the Breaching Construction Party, to the third Construction Party, and to any other persons that the Breaching Construction Party identifies in writing to the other Construction Parties in advance. Such notice shall set forth, in reasonable detail, the nature of the Breach, and where known and applicable, the steps necessary to cure such Breach. In the event of a Breach by Interconnection Customer, Transmission Provider and the Interconnected Transmission Owner agree to provide notice of such Breach, at the same time and in the same manner as its or their notice to Interconnection Customer, to any Project Finance Entity, provided that the Interconnection Customer has provided Transmission Provider and the Interconnected Transmission Owner with notice of an assignment to such Project Finance Entity(ies) and has identified such Project Finance Entities as contacts for notice purposes pursuant to Section 20 of this Appendix 2.

13.3 Cure and Default:

A Construction Party that commits a Breach and does not take steps to cure the Breach pursuant to this Section 13.3 is in Default of this Interconnection Construction Service Agreement.

13.3.1 Cure of Breach:

The Breaching Construction Party (a) may cure the Breach within thirty days from the receipt of such notice; or, (b) if the Breach cannot be cured within thirty days, may commence in good faith all steps that are reasonable and appropriate to cure the Breach within such thirty day time period and thereafter diligently pursue such action to completion.

13.4 Right to Compel Performance:

Upon the occurrence of an event of Default, a non-Defaulting Construction Party shall be entitled to (a) commence an action to require the Defaulting Construction Party to remedy such

Default and specifically perform its duties and obligations hereunder in accordance with the terms and conditions hereof, (b) withhold payments, (c) suspend performance hereunder, and (d) exercise such other rights and remedies as it may have in equity or at law.

13.5 Remedies Cumulative:

Subject to Section 19.1 of this Appendix 2, no remedy conferred by any provision of this Appendix 2 is intended to be exclusive of any other remedy and each and every remedy shall be cumulative and shall be in addition to every other remedy given hereunder or now or hereafter existing at law or in equity or by statute or otherwise. The election of any one or more remedies shall not constitute a waiver of the right to pursue other available remedies.

14 Termination

14.1 Termination

14.1.1 Upon Completion of Construction:

This Interconnection Construction Service Agreement shall terminate upon the later of the following: (i) completion of construction of all Interconnection Facilities; (ii) transfer of title under Section 5 of this Appendix 2; (iii) final payment of all Costs due and owing under this Interconnection Construction Service Agreement; and (iv) the delivery to the Interconnected Transmission Owner of final "as-built" drawings of any Interconnection Facilities built by the Interconnection Customer.

14.1.2 Upon Default By Either Constructing Entity:

Either Constructing Entity may terminate its obligations hereunder in the event of a Default by the other Constructing Entity as defined in Section 13.3 of this Appendix 2.

14.1.3 By Interconnection Customer:

Subject to its payment of Cancellation Costs as explained in Section 14.3 below, the Interconnection Customer may be relieved of its obligations hereunder upon sixty (60) days written notice to Transmission Provider and the Interconnected Transmission Owner.

14.2 [Reserved.]

14.3 Cancellation By Interconnection Customer

14.3.1 Applicability:

The following provisions shall survive and shall apply in the event that Interconnection Customer terminates the Interconnection Construction Service Agreement pursuant to this Section 14.1.3.

14.3.1.1 Cancellation Cost Responsibility:

Upon the cancellation of the Interconnection Construction Service Agreement by the Interconnection Customer, the Interconnection Customer shall be liable to pay to the Interconnected Transmission Owner or Transmission Provider all Cancellation Costs in connection with Construction Service for the Interconnection Customer pursuant to this Interconnection Construction Service Agreement, including Section 14.3.1.2 of this Appendix 2. In the event the Interconnected Transmission Owner incurs Cancellation Costs, it shall provide the Transmission Provider, with a copy to the Interconnection Customer, with a written demand for payment and with reasonable documentation of such Cancellation Costs. The Interconnection Customer shall pay the Transmission Provider each bill for Cancellation Costs within thirty (30) days after, as applicable, the Interconnected Transmission Owner's or Transmission Provider's presentation to the Interconnection Customer of written demand therefor, provided that such demand includes reasonable documentation of the Cancellation Costs that the invoicing party seeks to collect. Upon receipt of each of Interconnection Customer's payments of such bills of the Interconnected Transmission Owner, Transmission Provider shall reimburse the Interconnected Transmission Owner for Cancellation Costs incurred by the latter.

14.3.1.2 Disposition of Facilities Upon Cancellation:

Upon cancellation of the Interconnection Construction Service Agreement by an Interconnection Customer, Transmission Provider, after consulting with the Interconnected Transmission Owner, may, at the sole cost and expense of the Interconnection Customer, authorize the Interconnected Transmission Owner to (a) cancel supplier and contractor orders and agreements entered into by the Interconnected Transmission Owner to design, construct, install, operate, maintain and own the Transmission Owner Interconnection Facilities, provided, however, that Interconnection Customer shall have the right to choose to take delivery of any equipment ordered by the Interconnected Transmission Owner for which Transmission Provider otherwise would authorize cancellation of the purchase order; or (b) remove any Transmission Owner Interconnection Facilities built by the Interconnected Transmission Owner or any Transmission Owner Interconnection Facilities (only after title to the subject facilities has been transferred to the Interconnected Transmission Owner) built by the Interconnection Customer; or (c) partially or entirely complete the Transmission Owner Interconnection Facilities as necessary to preserve the integrity or reliability of the Transmission System, provided that Interconnection Customer shall be entitled to receive any rights associated with such facilities and upgrades as determined in accordance with Part VI of the Tariff; or (d) undo any of the changes to the Transmission System that were made pursuant to this Interconnection Construction Service Agreement. To the extent that the Interconnection Customer has fully paid for equipment that is unused upon cancellation or which is removed pursuant to subsection (b) above, the Interconnection Customer shall have the right to take back title to such equipment; alternatively, in the event that the Interconnection Customer does not wish to take back title, the Interconnected Transmission Owner may elect to pay the Interconnection Customer a mutually agreed amount to acquire and own such equipment.

14.3.2 Termination Upon Default:

In the event that Interconnection Customer exercises its right to terminate under Section 14.1.2 of this Appendix 2, and notwithstanding any other provision of this Interconnection Construction Service Agreement, the Interconnection Customer shall be liable for payment of the Interconnected Transmission Owner's Costs incurred up to the date of Interconnection Customer's notice of termination pursuant to Section 14.1.2 and the costs of completion of some or all of the Transmission Owner Interconnection Facilities or specific unfinished portions thereof, and/or removal of any or all of such facilities which have been installed, to the extent that Transmission Provider determines such completion or removal to be required for the Transmission Provider and/or Interconnected Transmission Owner to perform their respective obligations under Part VI of the Tariff or this Interconnection Construction Service Agreement, provided, however, that Interconnection Customer's payment of such costs shall be without prejudice to any remedies that otherwise may be available to it under this Appendix 2 for the Default of the Interconnected Transmission Owner.

14.4 Survival of Rights:

The obligations of the Construction Parties hereunder with respect to payments, Cancellation Costs, warranties, liability and indemnification shall survive termination to the extent necessary to provide for the determination and enforcement of said obligations arising from acts or events that occurred while the Interconnection Construction Service Agreement was in effect. In addition, applicable provisions of this Interconnection Construction Service Agreement will continue in effect after expiration, cancellation or termination to the extent necessary to provide for final billings, payments, and billing adjustments.

15 Force Majeure

15.1 Notice:

A Construction Party that is unable to carry out an obligation imposed on it by this Appendix 2 due to Force Majeure shall notify each other Construction Party in writing or by telephone within a reasonable time after the occurrence of the cause relied on.

15.2 Duration of Force Majeure:

A Construction Party shall not be responsible for any non-performance or considered in Breach or Default under this Appendix 2, for any non-performance, any interruption or failure of service, deficiency in the quality or quantity of service, or any other failure to perform any obligation hereunder to the extent that such failure or deficiency is due to Force Majeure. A Construction Party shall be excused from whatever performance is affected only for the duration of the Force Majeure and while the Construction Party exercises Reasonable Efforts to alleviate such situation. As soon as the non-performing Construction Party is able to resume performance of its obligations excused because of the occurrence of Force Majeure, such Construction Party shall resume performance and give prompt notice thereof to each other Construction Party.

15.3 Obligation to Make Payments:

Any Construction Party's obligation to make payments for services shall not be suspended by Force Majeure.

15.4 Definition of Force Majeure:

For the purposes of this section, an event of force majeure shall mean any cause beyond the control of the affected Interconnection Party or Construction Party, including but not restricted to, acts of God, flood, drought, earthquake, storm, fire, lightning, epidemic, war, riot, civil disturbance or disobedience, labor dispute, labor or material shortage, sabotage, acts of public enemy, explosions, orders, regulations or restrictions imposed by governmental, military, or lawfully established civilian authorities, which, in any of the foregoing cases, by exercise of due diligence such party could not reasonably have been expected to avoid, and which, by the exercise of due diligence, it has been unable to overcome. Force majeure does not include (i) a failure of performance that is due to an affected party's own negligence or intentional wrongdoing; (ii) any removable or remediable causes (other than settlement of a strike or labor dispute) which an affected party fails to remove or remedy within a reasonable time; or (iii) economic hardship of an affected party.

16 Subcontractors

16.1 Use of Subcontractors:

Nothing in this Appendix 2 shall prevent the Construction Parties from utilizing the services of subcontractors as they deem appropriate to perform their respective obligations hereunder, provided, however, that each Construction Party shall require its subcontractors to comply with all applicable terms and conditions of this Appendix 2 in providing such services.

16.2 Responsibility of Principal:

The creation of any subcontract relationship shall not relieve the hiring Construction Party of any of its obligations under this Appendix 2. Each Construction Party shall be fully responsible to each other Construction Party for the acts and/or omissions of any subcontractor it hires as if no subcontract had been made.

16.3 Indemnification by Subcontractors:

To the fullest extent permitted by law, a Construction Party that uses a subcontractor to carry out any of the Construction Party's obligations under this Appendix 2 shall require each of its subcontractors to indemnify, hold harmless and defend each other Construction Party, its representatives and assigns from and against any and all claims and/or liability for damage to property, injury to or death of any person, including the employees of any Construction Party or of any Affiliate of any Construction Party, or any other liability incurred by another Construction Party or any of its Affiliates, including all expenses, legal or otherwise, to the extent caused by any act or omission, negligent or otherwise, by such subcontractor and/or its officers, directors, employees, agents and assigns, that arises out of or is connected with the design, procurement, construction or installation of the facilities of either Constructing Entity described in this

Appendix 2; provided, however, that no Construction Party or Affiliate thereof shall be entitled to indemnity under this Section 16.3 in respect of any injury, loss, or damage to the extent that such loss, injury, or damage results from the negligence or willful misconduct of the Construction Party or Affiliate seeking indemnity.

16.4 Subcontractors Not Beneficiaries:

No subcontractor is intended to be, or shall be deemed to be, a third-party beneficiary of the Interconnection Construction Service Agreement.

17 Confidentiality:

Information is Confidential Information only if it is clearly designated or marked in writing as confidential on the face of the document, or, if the information is conveyed orally or by inspection, if the Construction Party providing the information orally informs the Construction Party receiving the information that the information is confidential. If requested by any Construction Party, the disclosing Construction Party shall provide in writing the basis for asserting that the information referred to in this section warrants confidential treatment, and the requesting Construction Party may disclose such writing to an appropriate Governmental Authority. Any Construction Party shall be responsible for the costs associated with affording confidential treatment to its information.

17.1 Term:

During the term of the Interconnection Construction Service Agreement, and for a period of three (3) years after the expiration or termination of the Interconnection Construction Service Agreement, except as otherwise provided in this Section 17, each Construction Party shall hold in confidence, and shall not disclose to any person, Confidential Information provided to it by any other Construction Party.

17.2 Scope:

Confidential Information shall not include information that the receiving Construction Party can demonstrate: (i) is generally available to the public other than as a result of a disclosure by the receiving Construction Party; (ii) was in the lawful possession of the receiving Construction Party on a non-confidential basis before receiving it from the disclosing Construction Party; (iii) was supplied to the receiving Construction Party without restriction by a third party, who, to the knowledge of the receiving Construction Party, after due inquiry, was under no obligation to the disclosing Construction Party to keep such information confidential; (iv) was independently developed by the receiving Construction Party without reference to Confidential Information of the disclosing Construction Party; (v) is, or becomes, publicly known, through no wrongful act or omission of the receiving Construction Party or breach of this Appendix 2; or (vi) is required, in accordance with Section 17.7 of this Appendix 2, to be disclosed to any Governmental Authority or is otherwise required to be disclosed by law or subpoena, or is necessary in any legal proceeding establishing rights and obligations under this Interconnection Construction Service Agreement. Information designated as Confidential Information shall no longer be

deemed confidential if the Construction Party that designated the information as confidential notifies the other Construction Parties that it no longer is confidential.

17.3 Release of Confidential Information:

No Construction Party shall disclose Confidential Information of another Construction Party to any other person, except to its Affiliates (limited by the Commission's Standard of Conduct requirements), subcontractors, employees, consultants or to parties who may be or considering providing financing to or equity participation in Interconnection Customer on a need-to-know basis in connection with the Interconnection Construction Service Agreement, unless such person has first been advised of the confidentiality provisions of this Section 17 and has agreed to comply with such provisions. Notwithstanding the foregoing, a Construction Party that provides Confidential Information of another Construction Party to any person shall remain primarily responsible for any release of Confidential Information in contravention of this Section 17.

17.4 Rights:

Each Construction Party retains all rights, title, and interest in the Confidential Information that it discloses to any other Construction Party. A Construction Party's disclosure to another Construction Party of Confidential Information shall not be deemed a waiver by either Construction Party or any other person or entity of the right to protect the Confidential Information from public disclosure.

17.5 No Warranties:

By providing Confidential Information, no Construction Party makes any warranties or representations as to its accuracy or completeness. In addition, by supplying Confidential Information, no Construction Party obligates itself to provide any particular information or Confidential Information to any other Construction Party nor to enter into any further agreements or proceed with any other relationship or joint venture.

17.6 Standard of Care:

Each Construction Party shall use at least the same standard of care to protect Confidential Information it receives as the Construction Party uses to protect its own Confidential Information from unauthorized disclosure, publication or dissemination. Each Construction Party may use Confidential Information solely to fulfill its obligations to the other Construction Parties under this Interconnection Construction Service Agreement or to comply with Applicable Laws and Regulations.

17.7 Order of Disclosure:

If a Governmental Authority with the right, power, and apparent authority to do so requests or requires a Construction Party, by subpoena, oral deposition, interrogatories, requests for production of documents, administrative order, or otherwise, to disclose Confidential

Information, that Construction Party shall provide the Construction Party that provided the information with prompt prior notice of such request(s) or requirement(s) so that the providing Construction Party may seek an appropriate protective order, or waive compliance with the terms of this Interconnection Construction Service Agreement. Notwithstanding the absence of a protective order, or agreement, or waiver, the Construction Party subjected to the request or order may disclose such Confidential Information which, in the opinion of its counsel, the Construction Party is legally compelled to disclose. Each Construction Party shall use Reasonable Efforts to obtain reliable assurance that confidential treatment will be accorded any Confidential Information so furnished.

17.8 Termination of Interconnection Construction Service Agreement:

Upon termination of the Interconnection Construction Service Agreement for any reason, each Construction Party shall, within ten (10) calendar days of receipt of a written request from another party, use Reasonable Efforts to destroy, erase, or delete (with such destruction, erasure and deletion certified in writing to the requesting party) or to return to the requesting party, without retaining copies thereof, any and all written or electronic Confidential Information received from the requesting party.

17.9 Remedies:

The Construction Parties agree that monetary damages would be inadequate to compensate a Construction Party for another Construction Party's Breach of its obligations under this Section 17. Each Construction Party accordingly agrees that each other Construction Party shall be entitled to equitable relief, by way of injunction or otherwise, if the first Construction Party breaches or threatens to breach its obligations under this Section 17, which equitable relief shall be granted without bond or proof of damages, and the receiving Construction Party shall not plead in defense that there would be an adequate remedy at law. Such remedy shall not be deemed to be an exclusive remedy for the breach of this Section 17, but shall be in addition to all other remedies available at law or in equity. The Construction Parties further acknowledge and agree that the covenants contained herein are necessary for the protection of legitimate business interests and are reasonable in scope. No Construction Party, however, shall be liable for indirect, incidental, consequential, or punitive damages of any nature or kind resulting from or arising in connection with a Breach of any obligation under this Section 17.

17.10 Disclosure to FERC or its Staff:

Notwithstanding anything in this Section 17 to the contrary, and pursuant to 18 C.F.R. § 1b.20, if FERC or its staff, during the course of an investigation or otherwise, requests information from one of the Construction Parties that is otherwise required to be maintained in confidence pursuant to this Interconnection Construction Service Agreement, the Construction Party, shall provide the requested information to FERC or its staff, within the time provided for in the request for information. In providing the information to FERC or its staff, the Construction Party must, consistent with 18 C.F.R. § 388.122, request that the information be treated as confidential and non-public by FERC and its staff and that the information be withheld from public disclosure. Construction Parties are prohibited from notifying the other Construction

Parties to the Interconnection Construction Service Agreement prior to the release of the Confidential Information to the Commission or its staff. A Construction Party shall notify the other Construction Parties when it is notified by FERC or its staff that a request to release Confidential Information has been received by FERC, at which time any of the Construction Parties may respond before such information would be made public, pursuant to 18 C.F.R. § 388.112.

17.11

Subject to the exception in Section 17.10, no Construction Party shall disclose Confidential Information of another Construction Party to any person not employed or retained by the disclosing Construction Party, except to the extent disclosure is (i) required by law; (ii) reasonably deemed by the disclosing Construction Party to be required in connection with a dispute between or among the Construction Parties, or the defense of litigation or dispute; (iii)_ otherwise permitted by consent of the Construction Party that provided such Confidential Information, such consent not to be unreasonably withheld; or (iv) necessary to fulfill its obligations under this Interconnection Construction Service Agreement or as a transmission service provider or a Control Area operator including disclosing the Confidential Information to an RTO or ISO or to a regional or national reliability organization. Prior to any disclosures of another Construction Party's Confidential Information under this subparagraph, the disclosing Construction Party shall promptly notify the other Construction Parties in writing and shall assert confidentiality and cooperate with the other Construction Parties in seeking to protect the Confidential Information from public disclosure by confidentiality agreement, protective order or other reasonable measures.

17.12

This provision shall not apply to any information that was or is hereafter in the public domain (except as a result of a Breach of this provision).

17.13 Return or Destruction of Confidential Information:

If any Construction Party provides any Confidential Information to another Construction Party in the course of an audit or inspection, the providing Construction Party may request the other party to return or destroy such Confidential Information after the termination of the audit period and the resolution of all matters relating to that audit. Each Construction Party shall make Reasonable Efforts to comply with any such requests for return or destruction within ten days after receiving the request and shall certify in writing to the requesting Construction Party that it has complied with such request.

18 Information Access And Audit Rights

18.1 Information Access:

Subject to Applicable Laws and Regulations, each Construction Party shall make available to each other Construction Party information necessary (i) to verify the costs incurred by the other

Construction Party for which the requesting Construction Party is responsible under this Appendix 2, and (ii) to carry out obligations and responsibilities under this Appendix 2. The Construction Parties shall not use such information for purposes other than those set forth in this Section 18.1 and to enforce their rights under this Appendix 2.

18.2 Reporting of Non-Force Majeure Events:

Each Construction Party shall notify each other Construction Party when it becomes aware of its inability to comply with the provisions of this Appendix 2 for a reason other than an event of force majeure as defined in Section 15.4 of this Appendix 2. The Construction Parties agree to cooperate with each other and provide necessary information regarding such inability to comply, including, but not limited to, the date, duration, reason for the inability to comply, and corrective actions taken or planned to be taken with respect to such inability to comply. Notwithstanding the foregoing, notification, cooperation or information provided under this Section shall not entitle the receiving Construction Party to allege a cause of action for anticipatory breach of this Appendix 2.

18.3 Audit Rights:

Subject to the requirements of confidentiality under Section 17 of this Appendix 2, each Construction Party shall have the right, during normal business hours, and upon prior reasonable notice to the pertinent Construction Party, to audit at its own expense the other Construction Party's accounts and records pertaining to such Construction Party's performance and/or satisfaction of obligations arising under this Interconnection Construction Service Agreement. Any audit authorized by this Section shall be performed at the offices where such accounts and records are maintained and shall be limited to those portions of such accounts and records that relate to obligations under this Appendix 2. Any request for audit shall be presented to the other Construction Party not later than twenty-four months after the event as to which the audit is sought. Each Construction Party shall preserve all records held by it for the duration of the audit period.

19 Disputes

19.1 Submission:

Any claim or dispute that any Construction Party may have against another Construction Party arising out of this Appendix 2 may be submitted for resolution in accordance with the dispute resolution provisions of Section 12 of the Tariff.

19.2 Rights Under The Federal Power Act:

Nothing in this Section shall restrict the rights of any Construction Party to file a complaint with FERC under relevant provisions of the Federal Power Act.

19.3 Equitable Remedies:

Nothing in this Section shall prevent any Construction Party from pursuing or seeking any equitable remedy available to it under Applicable Laws and Regulations.

20 Notices

20.1 General:

Any notice, demand or request required or permitted to be given by either Construction Party to another and any instrument required or permitted to be tendered or delivered by either Construction Party in writing to another may be so given, tendered or delivered, by recognized national courier, or by depositing the same with the United States Postal Service with postage prepaid, for delivery by certified or registered mail, addressed to the Construction Party, or personally delivered to the Construction Party, at the address specified in the Interconnection Construction Service Agreement. If agreed to in advance by the Construction Parties, notices may be communicated via electronic means, so long as there is e-mail confirmation of delivery.

20.2 Operational Contacts:

Each Construction Party shall designate, and shall provide to each other Construction Party contact information concerning, a representative to be responsible for addressing and resolving operational issues as they arise during the term of the Interconnection Construction Service Agreement.

21 Miscellaneous

21.1 Regulatory Filing:

In the event that this Interconnection Construction Service Agreement contains any terms that deviate materially from the form included in Attachment P or from the standard terms and conditions in this Appendix 2, the Transmission Provider shall file the executed Interconnection Construction Service Agreement on behalf of itself and the Interconnected Transmission Owner with FERC as a service schedule under the Tariff. Interconnection Customer may request that any information so provided be subject to the confidentiality provisions of Section 17 of this Appendix 2. An Interconnection Customer shall have the right, with respect to any Interconnection Construction Service Agreement tendered to it, to request (a) dispute resolution under Section 12 of the Tariff or, if concerning the Regional Transmission Expansion Plan, consistent with Schedule 5 of the Operating Agreement, or (b) that Transmission Provider file the agreement unexecuted with the Commission. With the filing of any unexecuted Interconnection Construction Service Agreement, Transmission Provider may, in its discretion, propose to FERC a resolution of any or all of the issues in dispute between any Construction Parties.

21.2 Waiver:

Any waiver at any time by any Construction Party of its rights with respect to a Breach or Default under this Appendix 2, or with respect to any other matters arising in connection with

this Appendix 2, shall not be deemed a waiver or continuing waiver with respect to any other Breach or Default or other matter.

21.3 Amendments and Rights under the Federal Power Act:

Except as set forth in this Section, this Interconnection Construction Service Agreement may be amended, modified, or supplemented only by written agreement of the Construction Parties. Such amendment shall become effective and a part of this Interconnection Construction Service Agreement upon satisfaction of all Applicable Laws and Regulations. Notwithstanding the foregoing, nothing contained in this Interconnection Construction Service Agreement shall be construed as affecting in any way any of the rights of any Construction Party with respect to changes in applicable rates or charges under Section 205 of the Federal Power Act and/or FERC's rules and regulations thereunder, or any of the rights of any Interconnection Party under Section 206 of the Federal Power Act and/or FERC's rules and regulations thereunder. The terms and conditions of this Interconnection Construction Service Agreement and every appendix referred to therein shall be amended, as mutually agreed by the Construction Parties, to comply with changes or alterations made necessary by a valid applicable order of any Governmental Authority having jurisdiction hereof.

21.4 Binding Effect:

This Interconnection Construction Service Agreement, including the rights and obligations incorporated by reference therein from this Interconnection Construction Service Agreement, shall be binding upon, and shall inure to the benefit of, the successors and assigns of the Construction Parties.

21.5 Regulatory Requirements:

Each Construction Party's performance of any obligation under this Interconnection Construction Service Agreement for which such party requires approval or authorization of any Governmental Authority shall be subject to its receipt of such required approval or authorization in the form and substance satisfactory to the receiving Construction Party, or the Construction Party making any required filings with, or providing notice to, such Governmental Authorities, and the expiration of any time period associated therewith. Each Construction Party shall in good faith seek, and shall use Reasonable Efforts to obtain, such required authorizations or approvals as soon as reasonably practicable.

22 Representations and Warranties

22.1 General:

Each Constructing Entity hereby represents, warrants and covenants as follows, with these representations, warranties, and covenants effective as to the Constructing Entity during the full time the Interconnection Construction Service Agreement is effective:

22.1.1 Good Standing:

Such Constructing Entity is duly organized or formed, as applicable, validly existing and in good standing under the laws of its state of organization or formation, and is in good standing under the laws of the respective State(s) in which it is incorporated and operates as stated in the preamble of the Interconnection Construction Service Agreement.

22.1.2 Authority:

Such Constructing Entity has the right, power and authority to enter into the Interconnection Construction Service Agreement, to become a party thereto and to perform its obligations thereunder. The Interconnection Construction Service Agreement is a legal, valid and binding obligation of such Constructing Entity, enforceable against such Constructing Entity in accordance with its terms, except as the enforceability thereof may be limited by applicable bankruptcy, insolvency, reorganization or other similar laws affecting creditors' rights generally and by general equitable principles (regardless of whether enforceability is sought in a proceeding in equity or at law).

22.1.3 No Conflict:

The execution, delivery and performance of the Interconnection Construction Service Agreement does not violate or conflict with the organizational or formation documents, or bylaws or operating agreement, of such Constructing Entity, or any judgment, license, permit, order, material agreement or instrument applicable to or binding upon such Constructing Entity or any of its assets.

22.1.4 Consent and Approval:

Such Constructing Entity has sought or obtained, or, in accordance with the Interconnection Construction Service Agreement will seek or obtain, each consent, approval, authorization, order, or acceptance by any Governmental Authority in connection with the execution, delivery and performance of such Agreement and it will provide to any Governmental Authority notice of any actions under such Agreement that are required by Applicable Laws and Regulations.

SCHEDULE A

SITE PLAN

SCHEDULE B

SINGLE-LINE DIAGRAM OF INTERCONNECTION FACILITIES

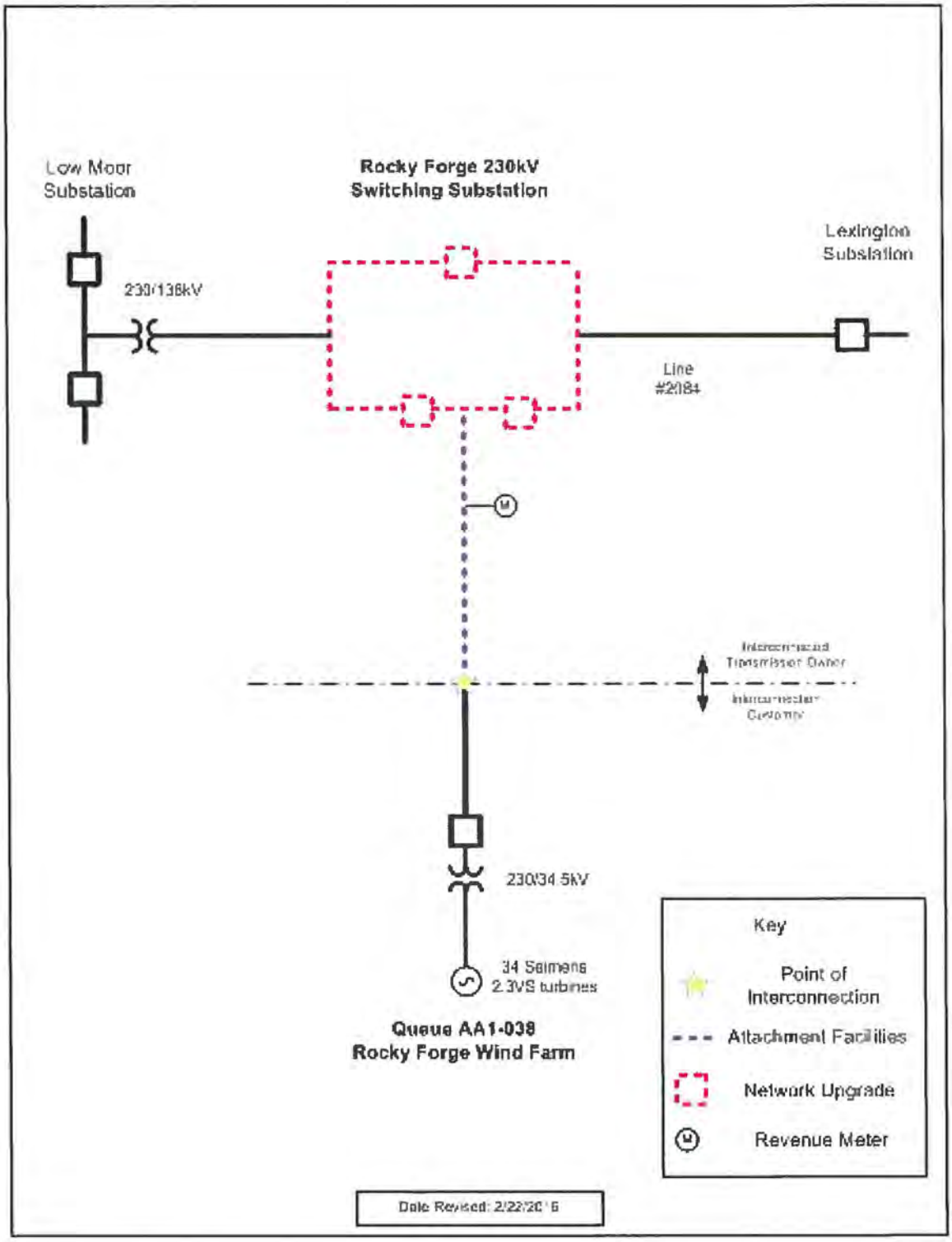

SCHEDULE C

TRANSMISSION OWNER INTERCONNECTION FACILITIES TO BE BUILT BY INTERCONNECTED TRANSMISSION OWNER

Attachment Facilities

Install the following Attachment Facilities on the Interconnected Transmission Owner side of the Point of Interconnection:

- Bus differential protection equipment;
- Transmission line to the Point of Interconnection which will be the new switching station fence line;
- Center break switch;
- Three Coupled Capacitor Voltage Transformers;
- Three Current Transformers;
- Metering equipment;
- Tubular bus;
- Steel Structures; and
- Conductor, connectors, conduit, control cable, foundations and grounding material.

Direct Connection Network Upgrades

Construct PJM Network Upgrade n4784, which consists of a new Rocky Forge 230kV (3) three breaker ring bus switching station.

Non Direct Connection Network Upgrades

Complete PJM Network Upgrade n4785, which requires the re-arrangement of the Lexington – Low Moor 230kV line #2084 in order to loop it into the new Rocky Forge switching station.

PJM Network Upgrade n4786 which requires remote protection and communication changes to allow for interconnection of the proposed generating facility with the transmission system. This work consists of:

- Lexington 230 kV drawing and relay settings changes;
- Low Moor 230 kV communication, drawing and relay setting changes.

SCHEDULE D

TRANSMISSION OWNER INTERCONNECTION FACILITIES TO BE BUILT BY INTERCONNECTION CUSTOMER PURSUANT TO OPTION TO BUILD

None

SCHEDULE E

[Reserved]

SCHEDULE F

[Reserved]

SCHEDULE G

CUSTOMER INTERCONNECTION FACILITIES

- One (1) 230 kV wye / 34.5 kV wye main power transformer;
- One (1) 230 kV circuit breaker;
- One (1) 15 MVar 34.5kV capacitor bank;
- 230kV generator lead is 0.018 miles in length; and
- Communication equipment to the Interconnected Transmission Owner bidirectional metering equipment.

SCHEDULE H

NEGOTIATED CONTRACT OPTION TERMS

None

SCHEDULE I

SCOPE OF WORK

Interconnection Customer:

- One (1) 230 kV wye / 34.5 kV wye main power transformer;
- One (1) 230 kV circuit breaker;
- One (1) 15 MVar 34.5kV capacitor bank;
- 230kV generator lead is 0.018 miles in length; and
- Communication equipment to the Interconnected Transmission Owner bidirectional metering equipment.

Interconnected Transmission Owner:

Attachment Facilities

Install the following Attachment Facilities on the Interconnected Transmission Owner side of the Point of Interconnection:

- Bus differential protection equipment;
- Transmission line to the Point of Interconnection which will be the new switching station fence line;
- Center break switch;
- Three Coupled Capacitor Voltage Transformers;
- Three Current Transformers;
- Metering equipment;
- Tubular bus;
- Steel Structures; and
- Conductor, connectors, conduit, control cable, foundations and grounding material.

Direct Connection Network Upgrades

Construct PJM Network Upgrade n4784, which consists of a new Rocky Forge 230kV (3) three breaker ring bus switching station.

Non Direct Connection Network Upgrades

Complete PJM Network Upgrade n4785, which requires the re-arrangement of the Lexington – Low Moor 230kV line #2084 in order to loop it into the new Rocky Forge switching station.

PJM Network Upgrade n4786 which requires remote protection and communication changes to allow for interconnection of the proposed generating facility with the transmission system. This work consists of:

- Lexington 230 kV drawing and relay settings changes;
- Low Moor 230 kV communication, drawing and relay setting changes.

SCHEDULE J

SCHEDULE OF WORK

Interconnected Transmission Owner:

By February 1, 2018:
Initiate construction of Rocky Forge switching station

By October 1, 2018:
Complete construction of the Transmission Owner Interconnection Facilities set forth in Schedule C of this CSA

Interconnection Customer:

By January 31, 2018:
Provide the Interconnected Transmission Owner a clear, graded, level and permitted site for the new Rocky Forge switching station

By October 31, 2018:
Complete all Customer Interconnection Facilities set forth in Schedule G of this CSA

SCHEDULE K

APPLICABLE TECHNICAL REQUIREMENTS AND STANDARDS

Dominion Facility Interconnection Requirements, dated January 1, 2016 available at the PJM website at the following link:
http://www.pjm.com/~/media/planning/plan-standards/private-dominion/facility-connection-requirements1.ashx

SCHEDULE L

INTERCONNECTION CUSTOMER'S AGREEMENT TO CONFORM WITH

IRS SAFE HARBOR PROVISIONS FOR NON-TAXABLE STATUS

As provided in Section 2.4.1 of Appendix 2 to this CSA and subject to the requirements thereof, Interconnection Customer represents that it meets all qualifications and requirements as set forth in Section 118(a) and 118(b) of the Internal Revenue Code of 1986, as amended and interpreted by Notice 88-129, 1988-2 C.B. 541, and as amplified and modified in Notices 90-60, 1990-2 C.B. 345, and 2001-82, 2001-2 C.B. 619 (the "IRS Notices"). Interconnection Customer agrees to conform with all requirements of the safe harbor provisions specified in the IRS Notices, as they may be amended, as required to confer non-taxable status on some or all of the transfer of property, including money, by Interconnection Customer to Interconnected Transmission Owner with respect to the payment of the Costs of construction and installation of the Transmission Owner Interconnection Facilities specified in this CSA.

Nothing in Interconnection Customer's agreement pursuant to this Schedule L shall change Interconnection Customer's indemnification obligations under Section 2.4.2 of Appendix 2 to the CSA.

SCHEDULE M

SCHEDULE OF NON-STANDARD TERMS AND CONDITIONS

None

SCHEDULE N

INTERCONNECTION REQUIREMENTS FOR A

WIND GENERATION FACILITY

Schedule N sets forth requirements and provisions specific to the interconnection of a wind generation facility that is greater than 20 MW. All other requirements pertaining to the interconnection of generation facilities above 20 MW set forth in Part IV of the Tariff continue to apply to wind generation facility interconnections.

A. Technical Standards Applicable to a Wind Generation Facility

i. Low Voltage Ride-Through (LVRT) Capability

A wind generation facility shall be able to remain online during voltage disturbances up to the time periods and associated voltage levels set forth in the standard below. The Schedule N LVRT standard provides for a transition period standard and a post-transition period standard.

Transition Period LVRT Standard

The transition period standard applies to wind generation facilities subject to Commission Order No. 661 that have either: (i) Interconnection Service Agreements signed and filed with the Commission, filed with the Commission in unexecuted form, or filed with the Commission as non-conforming agreements between January 1, 2006 and December 31, 2006, with a scheduled in-service date no later than December 31, 2007, or (ii) wind generation turbines subject to a wind turbine procurement contract executed prior to December 31, 2005, for delivery through 2007.

1. Wind generation facilities are required to remain in-service during three-phase faults with normal clearing (which is a time period of approximately 4 – 9 cycles) and single line to ground faults with delayed clearing, and subsequent post-fault voltage recovery to prefault voltage unless clearing the fault effectively disconnects the generator from the system. The clearing time requirement for a three-phase fault will be specific to the wind generation facility substation location, as determined by and documented by the transmission provider. The maximum clearing time the wind generation facility shall be required to withstand for a three-phase fault shall be 9 cycles at a voltage as low as 0.15 p.u., as measured at the high side of the wind generation facility step-up transformer (i.e. the transformer that steps the voltage up to the transmission interconnection voltage or "GSU"), after which, if the fault remains following the location-specific normal clearing time for three-phase faults, the wind generation facility may disconnect from the transmission system.

2. This requirement does not apply to faults that would occur between the wind generator terminals and the high side of the GSU or to faults that would result in a voltage lower than 0.15 per unit on the high side of the GSU serving the facility.

3. Wind generation facilities may be tripped after the fault period if this action is intended as part of a special protection system.

4. Wind generation facilities may meet the LVRT requirements of this standard by the performance of the generators or by installing additional equipment (e.g., Static VAr Compensator, etc.) within the wind generation facility or by a combination of generator performance and additional equipment.

5. Existing individual generator units that are, or have been, interconnected to the network at the same location at the initial effective date of the Schedule N LVRT standard are exempt from meeting the Schedule N LVRT standard for the remaining life of the existing generation equipment. Existing individual generator units that are replaced are required to meet the Schedule N LVRT standard.

Post-transition Period LVRT Standard

All wind generation facilities subject to Commission Order No. 661 and not covered by the transition period described above must meet the following requirements:

1. Wind generation facilities are required to remain in-service during three-phase faults with normal clearing (which is a time period of approximately 4 – 9 cycles) and single line to ground faults with delayed clearing, and subsequent post-fault voltage recovery to prefault voltage unless clearing the fault effectively disconnects the generator from the system. The clearing time requirement for a three-phase fault will be specific to the wind generation facility substation location, as determined by and documented by the transmission provider. The maximum clearing time the wind generation facility shall be required to withstand for a three-phase fault shall be 9 cycles after which, if the fault remains following the location-specific normal clearing time for three-phase faults, the wind generation facility may disconnect from the transmission system. A wind generation facility shall remain interconnected during such a fault on the transmission system for a voltage level as low as zero volts, as measured at the high voltage side of the wind GSU.

2. This requirement does not apply to faults that would occur between the wind generator terminals and the high side of the GSU.

3. Wind generation facilities may be tripped after the fault period if this action is intended as part of a special protection system.

4. Wind generation facilities may meet the LVRT requirements of this standard by the performance of the generators or by installing additional equipment (e.g., Static VAr Compensator) within the wind generation facility or by a combination of generator performance and additional equipment.

5. Existing individual generator units that are, or have been, interconnected to the network at the same location at the initial effective date of the Schedule N LVRT standard are exempt from meeting the Schedule N LVRT Standard for the remaining life of the existing generation equipment. Existing individual generator units that are replaced are required to meet the Schedule N LVRT Standard.

ii. Power Factor Design Criteria (Reactive Power)

The power factor requirements for wind generation facilities set forth in section 4.7 of Appendix 2 to Attachment O of the Tariff can be met by using, for example, power electronic devices designed to supply this level of reactive capability (taking into account any limitations due to voltage level, real power output, etc.) or fixed and switched capacitors if agreed to by the Transmission Provider, or a combination of the two. The Interconnection Customer shall not disable power factor equipment while the wind generation facility is in operation. Wind generation facilities shall also be able to provide sufficient dynamic voltage support in lieu of the power system stabilizer and automatic voltage regulation at the generator excitation system if the System Impact Study shows this to be required for system safety or reliability.

iii. Supervisory Control and Data Acquisition (SCADA) Capability

The wind generation facility shall provide SCADA capability to transmit data and receive instructions from the Transmission Provider to protect system reliability. The Transmission Provider and the wind generation facility Interconnection Customer shall determine what SCADA information is essential for the proposed wind generation facility, taking into account the size of the facility and its characteristics, location, and importance in maintaining generation resource adequacy and transmission system reliability in its area.

iv. Meteorological Data Reporting Requirement

The wind generation facility shall, at a minimum, be required to provide the Transmission Provider with site-specific meteorological data including:

- Temperature (degrees Fahrenheit)
- Wind speed (meters/second)
- Wind direction (degrees from True North)
- Atmospheric pressure (hectopascals)
- Forced outage data (wind turbine and MW unavailability)

The Transmission Provider and Interconnection Customer may mutually agree to any additional meteorological data that are required for the development and deployment of a power production forecast. All requirements for meteorological and forced outage data must be commensurate with the power production forecasting employed by the Transmission Provider. Such additional mutually agreed upon requirements for meteorological and forced outage data are set forth below:

NOT APPLICABLE FOR THIS CSA