DEQ

VIRGINIA DEPARTMENT OF
ENVIRONMENTAL QUALITY

New Underground Storage Tank Regulation Training

Alicia Meadows
UST Compliance Coordinator
Virginia Department of Environmental Quality
October 10, 2019

New UST Requirements

- January 1, 2018
- January 1, 2021

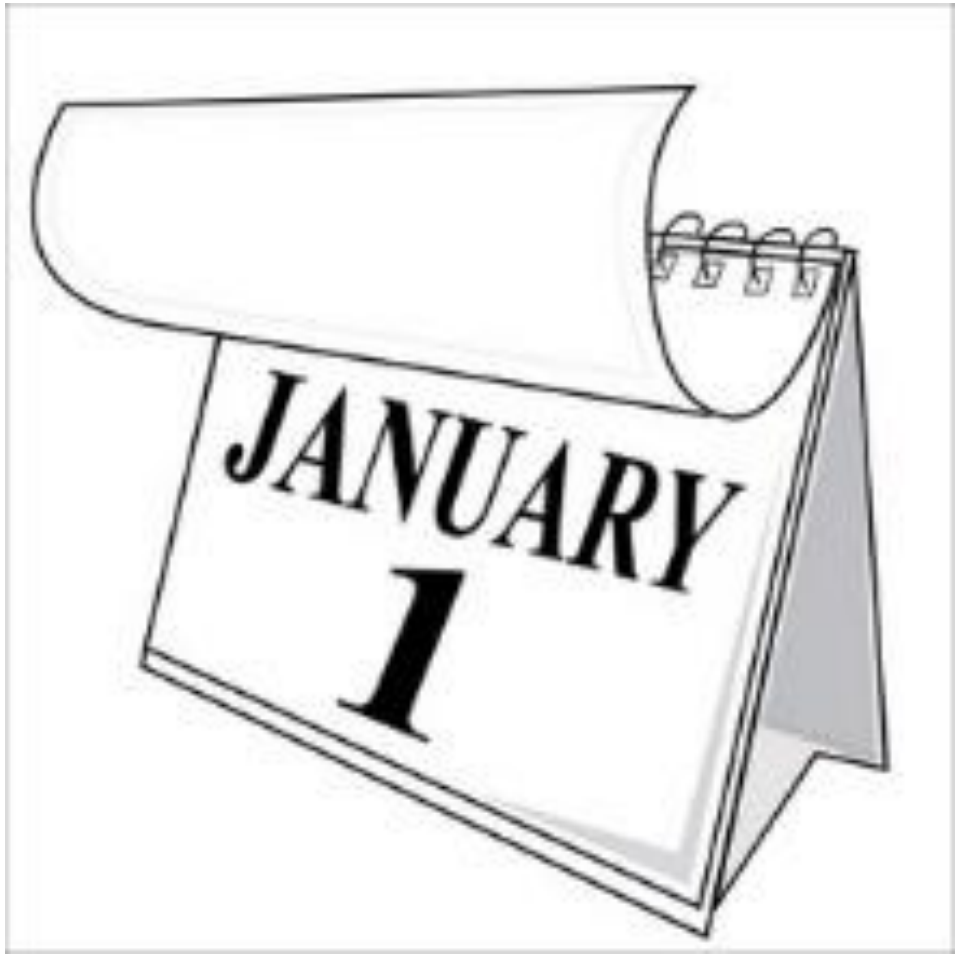

DEQ

Background

- Federal Regulation
  Effective October 13, 2015

- Virginia's Regulation
  Effective January 1, 2018

DEQ

Effective January 1, 2018

- New Notification Form
- Equipment Testing
- Release Detection
- Corrosion Protection

DEQ

Effective January 1, 2018

- Compatibility
- Repairs
- Financial Responsibility
- No new ball floats

Notification For Underground Storage Tanks (USTs) Change of Ownership For UST Facility

Virginia DEQ Water Form 7530-3C

(See reverse for mailing instructions) (1/18)

VIRGINIA DEPARTMENT OF ENVIRONMENTAL QUALITY

STATE USE ONLY	
ID Number	
Date Received	
Date Entered	
Entered By	
Comments	

New owners of USTs may use this form to request that DEQ change its registration records to reflect a new owner for **all currently in use** and **temporarily out of use** USTs at a facility. UST owners are required to notify DEQ within 30 days of any change in UST ownership.

NOTE: This form may be used only for ownership notification and only when the entire UST facility is transferred. Form 7530-3 must be used for other UST notifications.

PART I: CURRENT OWNERSHIP OF TANKS		PART II: LOCATION OF TANKS	
A. Current Owner Name		A. Facility Name	
B. Current Owner Address		B. Facility Street Address (P.O. Box not acceptable)	
C. City, State, Zip		C. City, Zip	D. County or Municipality
D. Name of Contact	E. Title of Contact	E. Facility Contact Name	F. Facility Contact Title
F. Phone Number ( )	G. Fax Number ( )	G. Contact Phone Number ( )	H. Contact Fax Number ( )
H. E-mail Address		I. Contact E-mail Address	

PART III: FORMER OWNERSHIP OF TANKS		PART IV: TRANSFER INFORMATION
A. Former Owner Name		A. New Facility Name if Changing
B. Former Owner Address		B. Date of Ownership Transfer
C. City, State, Zip		C. Number of Tanks at Facility
D. Former Owner Contact	E. Former Contact Title	D. Comments:
F. Phone Number ( )	G. Fax Number ( )	
H. E-mail Address		

PART V: OWNER CERTIFICATION

I certify under penalty of law that I have personally examined and am familiar with the information submitted in this and all attached documents, and that based on my inquiry of those individuals immediately responsible for obtaining the information, I believe that the submitted information is true, accurate and complete. I understand that the owner of the underground storage tanks hereby registered is responsible for compliance with the requirements of Virginia Regulations 9 VAC 25-580-10 et seq. and Federal Regulation 40 CFR Part 280, among other requirements. I warrant and represent that I am the owner or that I have the authority to sign this certification on behalf of the owner. I understand that this notification form is sufficient evidence to establish ownership of tanks subject to 9 VAC 25-580-10 et seq.

Name and Title _____ Signature _____ Date _____

DEQ

Testing for Newly Installed Equipment

Spill Prevention

Overfill Prevention

Containment Sumps

DEQ

Release Detection

- Site Assessments for Vapor or Groundwater Monitoring
- SIR must have quantitative result
- SIR Results must be obtained every 30 days

Corrosion Protection

- Tanks and/or piping that is not protected against corrosion must be permanently closed

DEQ

Corrosion Protection

DEQ

Alternatives to Closure

- No alternatives for bare or galvanized steel tank and/or piping
- Alternatives for CP systems and buried piping connectors
- Corrosion Expert

DEQ

Internal Lining

If it cannot be repaired, then close the tank!

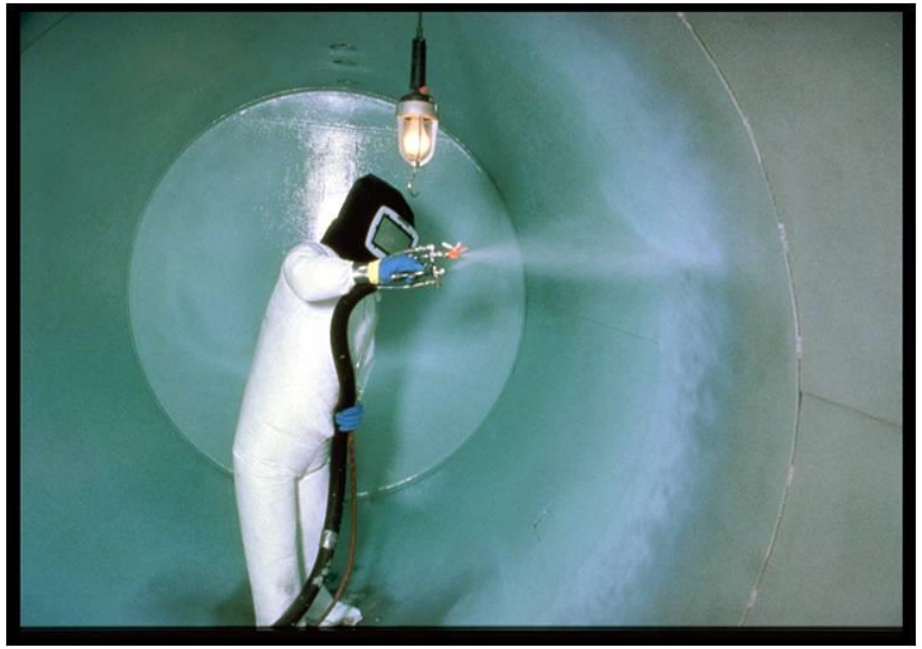

DEQ

Compatibility

- Demonstrate within 30 days
- Secondary Containment systems

DEQ

Compatibility - Determination

Petroleum Equipment Institute (PEI)

Underwriter's Laboratories (UL)

Manufacturers

Industry Professionals

Contractors

DEQ

Compatibility Demonstration

Checklist For Determining And Documenting UST System Compatibility

This sample checklist can help owners and operators determine and document the compatibility of their UST systems and notify DEQ 30 days prior to storing biofuels in an UST system.

Instructions: Complete all sections. This will help ensure you have the required information to demonstrate compatibility of an UST system with biofuels containing more than 10 percent ethanol or more than 20 percent biodiesel.

Facility Owner:	**Facility Name:**
Facility Owner Address:	**Facility's Street Address, City, State, Zip Code:**

Facility Id Number:	**Type And Blend Of Regulated Substance:**	**UST Capacity In Gallons:**
Estimated Date of Installation, Repair, or Retrofit:	☐ **Retrofit (existing tank)** ☐ **New installation** ☐ **Repair**	

Complete the checklist below, listing compatibility determination, method*, and description. All answers must be Yes and supported with a sufficient description or documentation for your system to be demonstrated compatible with the biofuel.

UST System Components	**Documentation Demonstrating Compatibility With The Substance Listed Above?**		**Method* A, B, Or C**	**Description Of Component Type, Model Number, And National Laboratory Certification, Listing Or Manufacturer Approval**
Tank	No	Yes		
Piping	No	Yes		
Containment Sumps	No	Yes		
Pumping Equipment	No	Yes		
Release Detection Equipment	No	Yes		
Spill Equipment	No	Yes		
Overfill Prevention Equipment	No	Yes		

*Methods:

A: Certification or listing of UST system equipment or components by a nationally recognized, independent testing laboratory for use with the regulated substance stored

B: Equipment or manufacturer approval. The manufacturer's approval must be in writing, indicate an affirmative statement of compatibility, specify the range of biofuel blends the component is compatible with, and be from the equipment or component manufacturer

C: Use another option determined by your implementing agency to be no less protective of human health and the environment than methods A or B. If using C, list your implementing agency and immediately below describe the approved alternative method for meeting the compatibility requirement

Method C Description:

_____

_____

Note: Owners and operators may find American Petroleum Institute's Recommended Practice 1626, *Storing and Handling Ethanol and Gasoline-Ethanol Blends at Distribution Terminals and Filling Stations*, useful in complying with the compatibility requirements.

In order to be in compliance with the UST regulation compatibility requirements for storing biofuels, you must keep documentation of compatibility of the UST system components listed on this page as long as you store the fuel.

For your records, you should update this checklist each time you repair or replace components of your UST system to ensure you have all the required compatibility documentation while storing biofuels.

Operator Training

No Changes!!

DEQ

Temporarily Closed Tanks

- Must demonstrate Financial Responsibility

DEQ

Financial Responsibility

Table 2: UST Financial Responsibility Requirement Sliding Scale

Annual Throughput (Gallons)	Corrective Action (Per Occurrence)	Third Party Liability (Per Occurrence)	Annual Aggregate (Per Occurrence)
600,000 or less	$5,000	$15,000	$20,000
600,001-1.2 M	$10,000	$30,000	$40,000
1,200,001-1.8 M	$20,000	$60,000	$80,000
1,800,001-2.4 M	$30,000	$120,000	$150,000
Above 2.4 M	$50,000	$150,000	$200,000

DEQ

Financial Responsibility - Mechanisms

- Letter from Chief Financial Officer
- Corporate Guarantee
- Insurance Endorsement
- Surety Bond
- Letter of Credit
- Trust Fund
- Self Insurance
- Certificate of Deposit

DEQ

Questions?

DEQ

January 1, 2021 Requirements

- Release detection equipment testing
- Spill, Overfill, and Secondary Containment equipment testing
- Walkthrough Inspections
- Repairs
- Release detection for emergency generator tanks

DEQ

Release Detection Equipment Testing Frequency

- By January 1, 2021
- Annually
- Prior to bringing tank back into use

DEQ

Testing Criteria

- Manufacturer’s instructions
- Industry standard
- DEQ approved method

Testing Criteria – Automatic Tank Gauges

- Test all alarms
- Verify set up
- Test Battery Backup

DEQ

Testing Criteria – Probes and Sensors

- Inspect for residual buildup
- Ensure floats move freely
- Ensure shaft is not damaged
- Ensure cables are free of kinks and breaks
- Ensure alarms operate properly and communicate with the console

DEQ

Testing Criteria – Automatic Line Leak Detectors

- MUST Simulate a leak
- 3 gph at 10 psi detectable within 1 hour
- Alarm system (if applicable)
- Positive shutdown system (if applicable)

DEQ

Testing Criteria - Other

Pressure Gauge	Groundwater and Vapor Monitoring Equipment
• Ensure proper communication with sensors and controller	• Ensure proper operation

DEQ

Multiple Methods of Release Detection

- Test equipment for one method
- DEQ staff will only review records for equipment that has been properly tested
- Increase likelihood of compliance by testing all equipment

Release Detection Equipment Testing - Recordkeeping

- Site assessments – keep as long as groundwater or vapor monitoring is used
- Annual operation tests – 3 years
- Test records must indicate what was tested

DEQ

Electronic Line Leak Detectors

- Must alert the operator to the presence of a release
- Must trigger positive STP shutdown at unmanned facilities
- Exception: Operator may be notified via mobile phone or other devices

DEQ

Questions?

DEQ

Equipment Testing – Every 3 Years

Spill Buckets

Overfill devices

Containment Sumps

Under-dispenser Containment (UDC)

DEQ

Equipment Testing – Empty Temporarily Out of Use Tanks

DEQ

Testing Criteria

- Manufacturer's instructions
- Industry standard – PEI RP 1200
- DEQ approved method

Spill Prevention Testing

- Test at installation & every 3 years
- Includes remote fills
- Test spill buckets around fill pipe risers
- Test using vacuum, pressure, vapor or liquid testing

DEQ

Spill Prevention Testing – Double-Walled Spill Buckets

IM every 30 days

- Both walls
- No dry interstice

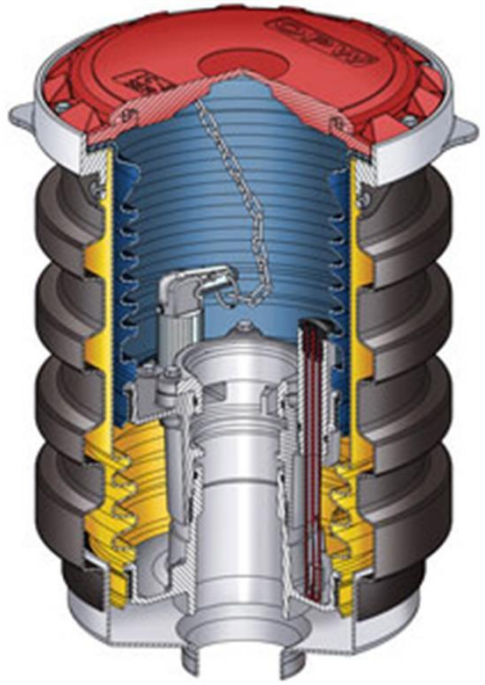

DEQ

Overfill Prevention Testing

- Installation and every 3 years
- Includes remote fills
- Test must verify device meets requirements
- All devices must be tested

DEQ

Overfill Prevention Testing – Ball Floats

Ball Float valves can not be used with:

- Suction piping
- Pumped delivery
- Coaxial Stage 1 vapor recovery
- Remote fill pipes
- Shut off valves

Containment Sump Testing

- Liquid tight container
- STP sumps
- Under-dispenser containment (UDC)
- Transition sumps

DEQ

04/14/2010

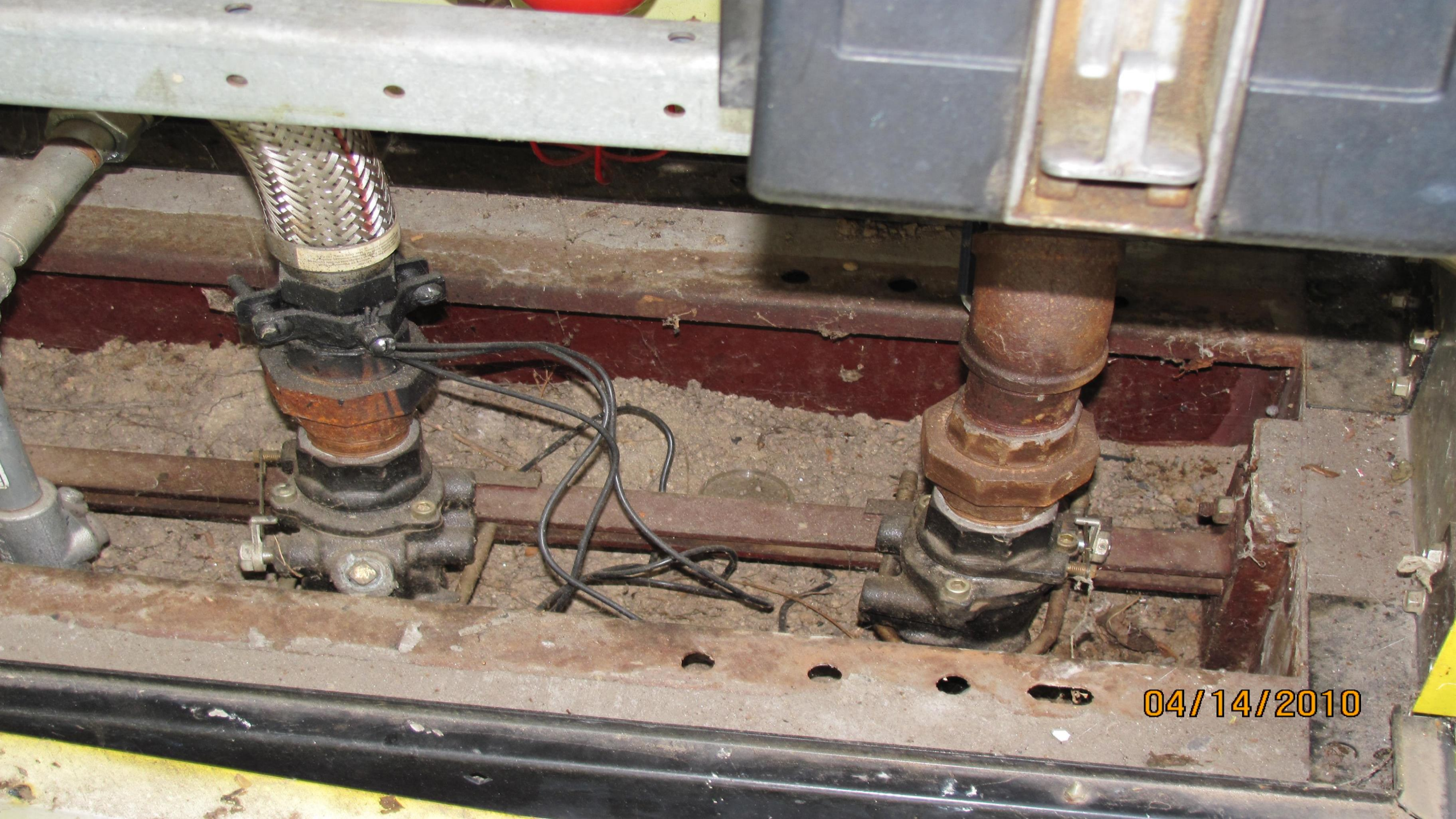
04/14/2010

03/31/2010

Containment Sump Testing

- Test sumps used for interstitial monitoring
- Test at installation & ever 3 years thereafter
- Do not need to test sumps associated with temporarily out of use tanks
- Double-walled sumps may be interstitially monitored every 30 days in lieu of testing

Containment Sump Testing

Manufacturer’s Instructions

Industry Standard (PEI RP-1200)

DEQ Approved Method

Containment Sump Testing – DEQ Approved Method Required Conditions

- Sensor is mounted vertically and at lowest point in the sump
- Positive pump or dispenser shutdown
- Facility is always staffed when pumps are operational

DEQ

Containment Sump Testing

What if I'm using multiple methods of piping release detection including interstitial monitoring?

DEQ

Containment Sump Testing – Multiple Methods of Release Detection

- Piping installed on or after 9/15/2010 – Interstitial monitoring required
- Piping installed before 9/15/2010 – Test if Interstitial Monitoring is used

SEPTEMBER 2010						
SUN	MON	TUES	WED	THURS	FRI	SAT
			1	2	3	4
5	6	7	8	9	10	11
12	13	14	15	16	17	18
19	20	21	22	23	24	25
26	27	28	29	30		

DEQ

Test Report Requirements

General Information	Test Details	Test Results
• Facility name and address • Date of Test • Testing company name, address, and phone number • Tester Name	• Item Tested • Test Method • Tanks and capacity	• Pass/Fail • Start and Stop times • Liquid or pressure level

DEQ

Repairs

Repair or Close

Repair immediately

Do NOT use faulty equipment

Not a suspected release

Closure Assessment not required

Test Immediately after Repair

DEQ

Disposal Options for Test Water

- VPDES General Permit allowing discharge to water
- Drum or tote storage prior to recycling
- Follow solid and hazardous waste regulation

DEQ

Test Records - Recordkeeping

- Testing records - keep for 3 years
- Interstitial monitoring records – keep for as long as interstitial monitoring is used

DEQ

Walkthrough Inspections

- By January 1, 2021
- Identify equipment problems before a release occurs
- Not required for empty TOU tanks

DEQ

Walkthrough Inspections - Frequency

Every 30 days

- Spill buckets (Exception: May be checked prior to each delivery if deliveries occur greater than every 30 days)
- Release detection equipment

Annually

- Containment sumps
- Handheld release detection equipment

DEQ

Walkthrough Inspections – Every 30 days

Spill Prevention Device

- Check for damage
- Remove liquid and debris
- Check for fill pipe obstructions
- Check fill pipe cap
- Check interstitial space if double-walled

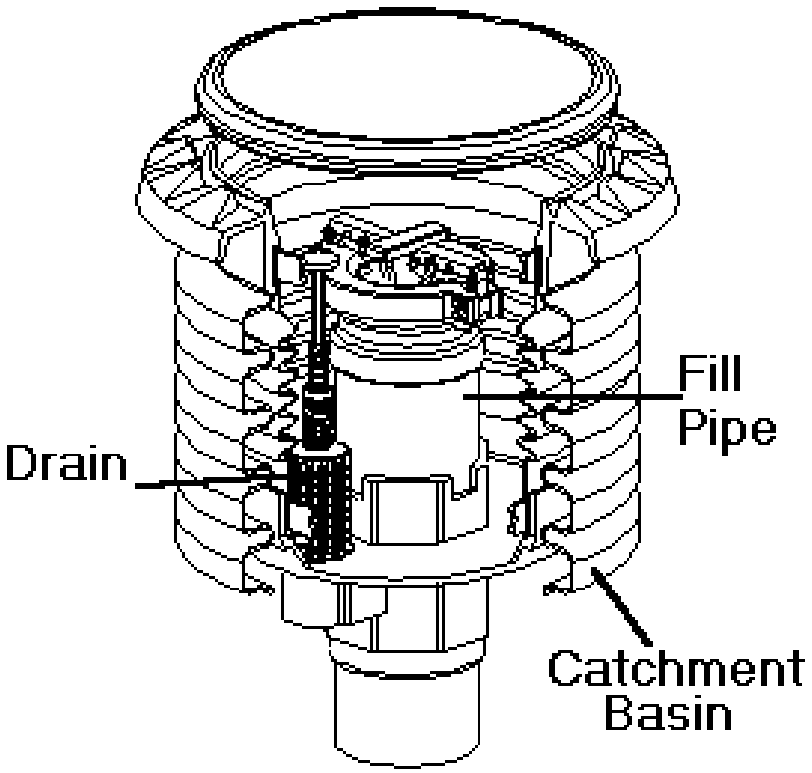

SEP 15 2004

Walkthrough Inspections – Every 30 days

Release Detection Conditions

- Alarms
- Unusual operating conditions
- Water in tank
- Inconclusive or failed results
- Records
- May be remotely monitored

DEQ

Walkthrough Inspections – Annually

Containment Sumps and UDCs

- Check for damage
- Check that sump sensors are positioned correctly
- Check for leaks
- Check retaining wall condition
- Remove liquid and debris
- Check the interstice of double-walled containment

DEQ

02/04/2010 15:45

Walkthrough Inspections – Annually

Handheld Release Detection Equipment

- Test for proper operability and serviceability
- Manufacturer’s instructions
- PEI RP 900

DEQ

Walkthrough Inspection - Protocols

- PEI RP 900
- DEQ Protocol

DEQ

Walkthrough Inspection Documentation

- PEI RP 900 checklists
- DEQ checklist
- Design your own

DEQ

Walkthrough Inspections - Qualifications

- Certified Class A or B operators are qualified
- Third-party contractors must demonstrate qualifications
- Otherwise, owner must demonstrate qualifications

DEQ

Appendix C Sample Walkthrough Inspection Checklist

Date Of Inspection												
Required Every 30 Days (exception: if your UST system receives deliveries at intervals greater than 30 days, you may check your spill prevention equipment prior to each delivery.												
Visually check spill prevention equipment for damage. Remove liquid or debris.												
Check for and remove obstructions in fill pipe.												
Check fill cap to ensure it is securely on fill pipe.												
For double-walled spill prevention equipment with interstitial monitoring, check for a leak in the interstitial area.												
Check release detection equipment to ensure it is operating with no alarms or unusual operating conditions present.												
Review and keep current release detection records.												
Required Annually												
Visually check containment sumps for damage and leaks to the containment area or releases to the environment.												
Remove liquid in contained sumps or debris.												
For double-walled containment sumps with interstitial monitoring, check for leaks in the interstitial area.												
Check hand-held release detection equipment, such as groundwater bailers and tank gauge sticks, for operability and serviceability.												
Recommended Activities												
Fill and monitoring ports: Inspect all fill or monitoring ports and other access points to make sure that the covers and caps are tightly sealed and locked.												
Spill and overfill response supplies: Inventory and inspect the emergency spill response supplies. If the supplies are low, restock the supplies. Inspect supplies for deterioration and improper functioning.												
Containment sump areas: Look for significant corrosion on the UST equipment.												
Dispenser hoses, nozzles, and breakaways: Inspect for loose fittings, deterioration, obvious signs of leaks, and improper functioning.												

Your initials in each box below the date of the inspection indicate the device or system was inspected and satisfactory on that date.

In the following table, explain actions taken to fix issues.

Date	Action Taken

Keep this record for at least one year after last inspection date on the form

DRAFT

Walkthrough Inspections - Exercise

- Divide into groups of 5
- Pull a walkthrough inspection checklist out of your packet
- Conduct a walkthrough inspection based upon the pictures shown

DEQ

FLEX
08/17/2010

DEQ

NORMAL
TROUBLE
ALARM
OPW
TANK GAUGES
EECO 1500

DEQ

DEQ

Questions

Emergency Generator Tanks

Must perform release detection on tanks and piping

Problematic

DEQ

Emergency Generator Tanks

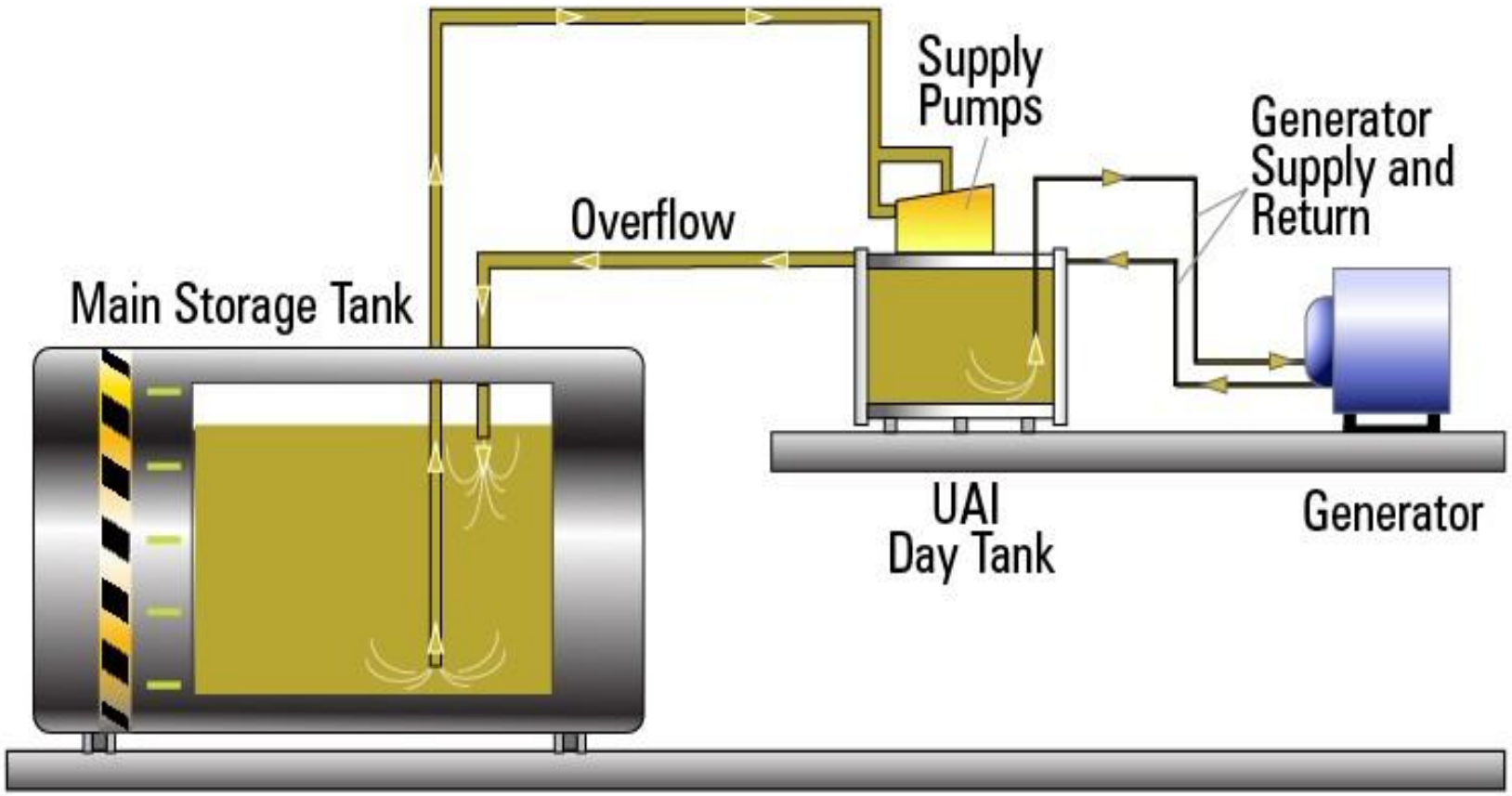

DEQ

Emergency Generator Tanks – RD Requirements for Piping from the UST to the Day Tank

- Release detection not required on suction system
- Pressurized piping system must have ALLD and one other method of release detection

DEQ

Emergency Generator Tanks – Automatic Line Leak Detector Options

- Mechanical
- Electronic
- Sump Sensors

DEQ

Emergency Generator Tanks – Mechanical Line Leak Detectors

- Do not function well with typical designs
- Restricts product flow to generator
- Not good in an emergency!

DEQ

Emergency Generator Tanks – Electronic Line Leak Detectors

Stay in alarm mode

Piping Modifications may be needed

Ensure that positive shutdown is not installed

DEQ

Emergency Generator Tanks – Line Tightness Testing

- Locking ball valve
- Remains in open position

DEQ

Emergency Generator Tanks – Interstitial Monitoring

- Secondarily contained piping
- Containment sumps
- Sump sensors

DEQ

Emergency Generator Tanks – RD Requirements for Piping from the Day Tank to the UST (Return Line)

- Pressurized piping
- ALLD is not required on the return line piping
- One method of release detection is required

DEQ

Emergency Generator Tanks – Return Piping

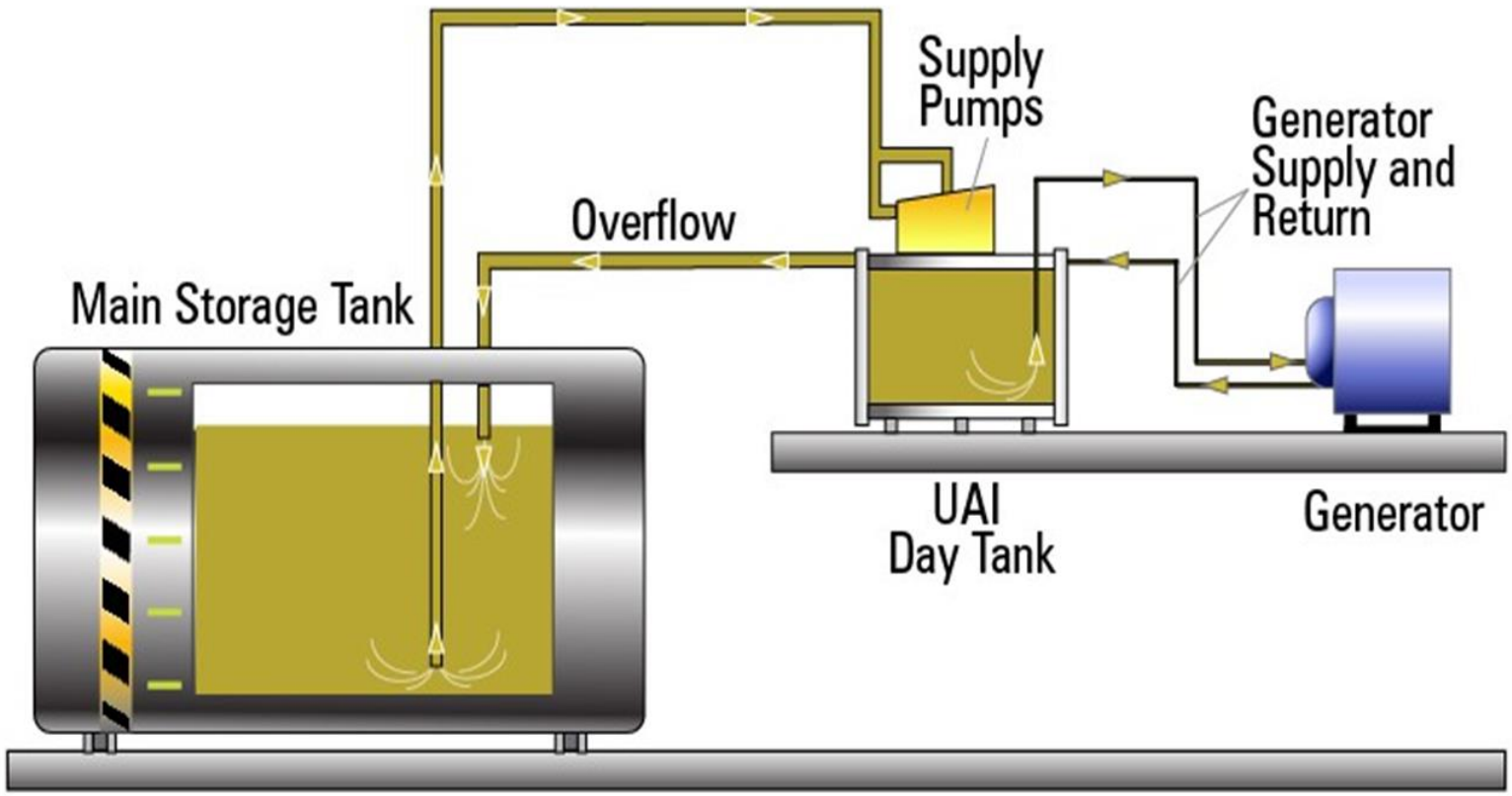

DEQ

Emergency Generator Tanks – Return Piping Options

- Double-walled lines with sump sensors
- Annual line tightness test
- Automatic line leak detectors not required

DEQ

Emergency Generator Piping Release Detection Options

Emergency Generator UST Piping Release Detection Options	
Piping Type	**Allowable Test Method**
Pressurized piping from UST to Day Tank	1. ALLD required 2. Double-walled piping - Interstitial monitoring with sump sensor 3. Single walled piping - locking ball/isolation valve is needed to perform annual line tightness test unless another method of release detection is used
Piping from Day Tank to UST (Return line)	1. ALLD not required 2. Double-walled piping – interstitial monitoring with sump sensor 3. Single walled piping – locking ball/isolation valve is needed to perform annual line tightness test unless another method of release detection is used

DEQ

Questions

Summary – Effective January 1, 2018

Ball Floats may no longer be installed

Spill Bucket, Containment Sump, and UDC testing at installation

Site assessments must be signed by professional

Tanks and piping without corrosion protection must be closed

If tank liner can not be repaired, the tank must be closed

DEQ

Summary – Effective January 1, 2018

Repaired equipment must be tested

Compatibility Notification

Compatibility Demonstration

Financial Responsibility for temporarily closed tanks

DEQ

Summary – Requirements Effective January 1, 2021

Release Detection Equipment Testing

Electronic Line Leak Detector Testing

Spill Bucket, Overfill Prevention, and Containment Sump Testing

DEQ

Summary – Requirements Effective January 1, 2021

Walkthrough Inspections

Release Detection for Emergency Generator Tanks

DEQ

Resources

- DEQ Central Office Phone: (804) 698-4010
- Regional Office
- DEQ's Website: www.deq.virginia.gov
- DEQ's Email List: Sign up on DEQ's Website
- DEQ's Tanks Email: tank@deq.virginia.gov
- EPA's Website:www.epa.gov/ust