Retrofit Plan
for CCR Surface Impoundments
Solid Waste Management Unit Application

Clover Power Station
Clover, Virginia

November 2016

Prepared For
Virginia Electric and Power Company

R. Kent Nilsson, P.E.
Senior Engineer

Nakia W. Addison
Project Manager

30 PATEWOOD DRIVE, SUITE 300, GREENVILLE, SC 29615, ● 864.281.0030 PHONE ● 864.281.0288 FAX ● WWW.TRCSOLUTIONS.COM

Table of Contents

Section 1 Introduction 1

1.1 Regulatory Background 1
1.2 Site Information 1
1.3 Retrofit Description 2

Section 2 Retrofit Operations Plan 4

2.1 Schedule of Retrofit Activities 4
2.2 Retrofit Personnel and Equipment 4
2.3 Retrofit Initiation Procedures 4
2.4 Retrofit Phasing 4
2.5 Retrofit Operational Performance Standards 5
2.5.1 Types of Waste 5
2.5.2 Fire Control 5
2.5.3 Storm Water Control 5
2.5.4 Dust, Odor, and Vector Control 5
2.5.5 Litter Control 6
2.5.6 Noise Control 6
2.5.7 Excavation 6
2.6 Prevention of Releases to Groundwater and Subsurface Environment 6
2.7 Prevention of Release to Surface Water, Wetlands, or Soil Surface 7
2.8 Prevention of Releases to Air 7
2.9 Management of Removed Materials 7
2.9.1 Disposition of Recoverable Materials 7
2.9.2 Soils Management Plan 7
2.9.3 Disposition of Unusable Materials 7
2.10 Design Plans 8

Section 3 Site Monitoring Plans 9

3.1 Groundwater Monitoring 9
3.2 Storm Water Discharge Monitoring 9

Section 4 Retrofit Cost Estimate 10

4.1 Retrofit Cost Estimate 10

4.2 Financial Assurance 10

Section 5 Certification 11

List of Appendices

Appendix A Retrofit Design Plans
Appendix B Retrofit Schedule
Appendix C Retrofit Cost Estimate

Section 1
Introduction

Virginia Electric and Power Company d/b/a Dominion Virginia Power (Dominion) owns and operates the Clover Power Station[1] (Station). The Station currently operates two Sludge Sedimentation Basins (North and South Basins; basins), which meet the definition of coal combustion residual (CCR) surface impoundments under the United States Environmental Protection Agency (USEPA) Disposal of Coal Combustion Residuals From Electric Utilities Final Rule (CCR Rule). This Plan describes the activities associated with the retrofit of the basins to meet the design standards in the CCR rule. This Plan was prepared for Dominion by TRC Environmental Corporation (TRC).

1.1 Regulatory Background

The basins have previously been regulated through the Station's Virginia Pollutant Discharge Elimination System (VPDES) permit. With the finalization of EPA's CCR Rule and Virginia's adoption of it into the Virginia Solid Waste Management Regulations (VSWMR), the basins are being retrofitted in accordance with 40 CFR 257.102(k) and permitted as Solid Waste Management Units (SWMUs) under the VSWMR. This Plan details how the retrofitting of the basins will occur.

Per direction from the Virginia Department of Environmental Quality (VDEQ), this Plan follows the format guidelines for "Landfill Mining Operating Plans for Solid Waste Disposal Facilities" Submission Instruction No. 27, issued by the VDEQ in 2013.

1.2 Site Information

The Station is located on the Staunton River in Halifax County, Virginia near the Town of Clover at approximately latitude 36°52'11.79"N, longitude 78°42'6.47"W. The Station has two coal-fired units that produce CCRs, including flue gas desulfurization (FGD) sludge. There are currently two existing CCR basins at the Station (North and South), which cover a total area of approximately 4 acres as shown on the Retrofit Design Plan in Appendix A.

The basins are located on the eastern side of the plant and consist of earthen impoundments, with a maximum basin depth of approximately nine feet. A gravel-surfaced road extends along the top of the containment berm along the east, south and north sides of the basins, with

[1] The Clover Power Station and associated CCR units are jointly and equally owned by Dominion Virginia Power and Old Dominion Electric Cooperative (ODEC).

downward-sloping ramps on the east side providing heavy equipment access to each basin's interior for removal of accumulated solids.

1.3 Retrofit Description

The current basins will be retrofitted in compliance with 40 CFR 257.102(k)(1) through the removal of CCR materials and the existing liner materials and subsoils, and installation of a composite liner system compliant with 40 CFR 257. 72. Retrofitting will be conducted during the 2017 and 2018 construction seasons as described below.

In 2017, plant flows will be diverted to the South Basin. The North Basin will be closed by removing sludge materials, including FGD sludge, and the existing liner system. The existing liner system is composed of, from top to bottom, protective concrete and riprap, sand, and a geomembrane liner. CCR material observed in subsoils below the geomembrane will also be removed. After removal of CCR materials and the existing liner system, the North Basin will be retrofitted by restoring and establishing subbase grades, and constructing the new liner system. The new liner system will be composed from top to bottom of the following elements:

- Concrete cover,
- Geotextile cushion,
- 60-mil high density polyethylene (HDPE) geomembrane, and
- 24-inch-thick compacted clay layer with a maximum hydraulic conductivity of 1×10^{-7} centimeters per second (cm/s).

The liner system for the southeast corner of the North Basin surrounding the pump station will not be constructed during 2017. A temporary dam and pump structure will be constructed after the North Basin liner system is installed to allow active use of the Basin during the 2018 construction season, and will provide a dry working area for constructing the permanent pump structure and tie-in to the North Basin.

In 2018, plant flows will be diverted to the retrofitted North Basin. The South Basin will be cleaned by removing sludge, including FGD sludge, and the existing liner system. The existing liner system is composed of, from top to bottom, protective concrete and riprap, sand, and a geomembrane liner. CCR material observed in subsoils below the geomembrane liner will also be removed. After removal of CCR material and the existing liner system, the existing pump station and flow split box will be demolished. The South Basin will be retrofitted by restoring or establishing subbase grades and constructing the new liner systems. A new pump station and flow split box will be constructed after installation of the new liner system. During 2018, the southeastern portion of the North Basin will be lined and tied into the 2017 construction.

It is anticipated that flow will be diverted to the retrofitted South Basin in 2018, to allow removal of the temporary dam and temporary pump structure.

A copy of the Retrofit Design Plans is provided in Appendix A.

1.4 Notifications

In accordance with the CCR Rule (40 CFR 257.102(k)), Dominion will post an Intent to Initiate Retrofit notice to the operating record prior to initiating retrofit activities. This plan will become part of the Station's operating record. In addition, a Notification of Completion of Retrofit with an engineer's certification will be posted to the operating record within 30 days of completion of retrofit activities (40 CFR 257.102(k)). The retrofit plan and notifications will also be posted to Dominion's publicly accessible CCR website and sent to the VDEQ.

Section 2
Retrofit Operations Plan

This Retrofit Operations Plan section was prepared to address the plan requirements of Section I of the VDEQ Solid Waste Permitting Submission Instruction No. 27. However, since this submission instruction is intended for landfill mining operations, not all the requirements of this section apply to the retrofitting of the North and South Basins. This section also incorporates applicable CCR Rule requirements for written retrofit plans (40 CFR 257.102(k)(2)).

2.1 Schedule of Retrofit Activities

As discussed in Subsection 1.3, retrofit activities will occur during the construction seasons of 2017 and 2018. A detailed schedule for completing retrofit activities is provided in Appendix B.

2.2 Retrofit Personnel and Equipment

The personnel and equipment that will be utilized during retrofitting operations will be determined by the contractor selected by Dominion to perform the retrofit activities.

2.3 Retrofit Initiation Procedures

Prior to initiating retrofit activities, the contractor will perform the following:

1. Install all erosion and sediment control devices as shown on Sheet S3106 of the Retrofit Design Plans (Appendix A).
2. Ensure that roads used to access the retrofit area are suitable for the vehicles and equipment that will be used during retrofit operations.
3. Designate area for material and equipment storage that will be on site during retrofit operations, including: HDPE liner, geotextile, new piping, new pumps, etc.
4. Training will be performed for all retrofit personnel and inspections will be performed routinely to minimize to the potential for a material release or equipment failure that could result in environmental impacts.

2.4 Retrofit Phasing

As discussed in Subsection 1.3 of this Plan, the North Basin will be retrofitted in 2017, and the South Basin will be retrofitted in 2018. A detailed schedule of the retrofitting activities is provided in Appendix B. A Construction Sequence Plan is also provided on Sheet S3105 of the Retrofit Design Plans (Appendix A).

2.5 Retrofit Operational Performance Standards

2.5.1 Types of Waste

FGD sludge that accumulates within the North and South Basins is routinely dewatered, loaded into trucks, and disposed of at the Clover Power Station's on-site permitted landfill. It is anticipated that during the retrofit process the FGD sludge removed from the North and South Basins will be managed in the same manner. Because a maintenance cleaning was performed on the basins prior to retrofit activities, approximately 5,000 cubic yards (CY) and 19,000 CY will be removed from the North and South Basins, respectively, as part of the retrofit. Following completion of FGD sludge removal operations, the impoundment liners and liner protection materials (consisting of concrete, riprap, geotextile, HDPE geomembrane, and sand) will also be demolished and disposed of at an off-site authorized disposal facility. Additionally, all structures and equipment (*i.e.,* pumps, vaults, piping, etc.) will also be decommissioned and disposed of at an off-site authorized disposal facility. While one basin is being retrofitted, the other basin will continue to operate and receive CCR.

2.5.2 Fire Control

The Station maintains an Emergency Action Plan. A description of the fire protection equipment available at the site and the procedures to be followed in the event of a fire or other emergency is provided in this plan.

2.5.3 Storm Water Control

The existing topography of the area surrounding the North and South Basins is sloped to drain away from the basins. Therefore, significant run-on into active excavations from surrounding areas is not expected. However, storm water that accumulates within the basin being retrofitted will be pumped to the adjacent active basin to ensure sufficiently dry construction conditions and workability.

Additionally, increased runoff from the basin area is not expected as a result of retrofitting. However, erosion and sediment controls will be installed prior to initiating retrofit activities as discussed in Subsection 2.3 of this Plan.

2.5.4 Dust, Odor, and Vector Control

Dust control during retrofitting activities will be maintained via the use of water trucks or other approved devices as described in the Station's fugitive dust control plan (dated

December 17, 2015). Odor control will not be necessary, since the waste materials associated with the basins (CCR materials) do not present nuisance odors.

2.5.5 Litter Control

During retrofitting activities, the contractor will be responsible for ensuring that all litter and waste materials are contained by following the Station housekeeping and maintenance protocols.

2.5.6 Noise Control

The basins that are being retrofitted are several hundred feet inside the property boundary of the Clover Power Station, and retrofitting activities are not expected to generate noise levels higher than other ongoing station operations.

2.5.7 Excavation

Retrofitting activities will include the dewatering, excavation, and removal of CCR (sludge) from within each basin. The CCR materials will be dewatered in-place to not only provide stable excavation slopes, but to allow transport in trucks and final disposal in the on-site landfill. Dewatering activities will likely include the installation of temporary sumps and construction of internal ditching within the CCR solids. Collected water will be pumped and discharged to the adjacent active basin. Once the CCR materials are sufficiently dry, they will be excavated by heavy equipment operating in the bottom of the basin and loaded into dump trucks for hauling to the on-site landfill.

2.6 Prevention of Releases to Groundwater and Subsurface Environment

The current basins have a geomembrane liner, which, as described above, will be removed. The retrofitted basins will have a liner designed in accordance with the CCR Rule and VSWMR, which will include a HDPE geomembrane and compacted clay. CCR will be removed from the existing basins prior to removing the existing liner system. Therefore, all source materials (CCR and any impacted liner components) that could present the potential for releases to groundwater or the subsurface environment, will be removed and placed in a permitted, lined landfill. Additionally, during retrofitting activities, groundwater will be monitored in accordance with the Groundwater Monitoring Program. Retrofitting activities are not expected to cause a release to the environment.

2.7 Prevention of Release to Surface Water, Wetlands, or Soil Surface

The release of CCR materials to surface water, wetlands, or soil surface will be principally prevented via the phased process that ensures the containment of these materials in the basins during the retrofitting process as solids are being removed and disposed of at the Station's on-site landfill. Retrofitting activities are not expected to present conditions beyond the typical operation of the existing basins. The water level in the impoundments will be maintained and regulated by pumps that recirculate surface water from the basins back to the Station for use in various processes.

2.8 Prevention of Releases to Air

Fugitive dust emissions will be controlled throughout retrofitting activities via the use of water trucks or other approved dust control devices as described in the Station's fugitive dust control plan. No other releases to air will occur as a result of the retrofitting process.

2.9 Management of Removed Materials

As previously discussed, retrofitting activities will include the excavation and removal of CCR (sludge) and old liner materials from within the existing basins. The CCR material will be sufficiently dried then hauled to the Station's on-site permitted landfill (Permit No. 556) for disposal.

2.9.1 Disposition of Recoverable Materials

No recoverable materials will be generated during the retrofit process.

2.9.2 Soils Management Plan

After visual confirmation that all CCR material has been removed, the existing soils beneath the basins will be regraded and compacted as needed to prepare the appropriate subgrade for the liner being installed as part of the retrofit process as shown in the design plans provided in Appendix A. Existing subsoils will not be used for any other purpose.

2.9.3 Disposition of Unusable Materials

Unusable materials that will be generated during retrofitting activities include the following:

- CCR (sludge) within the basins
- Concrete
- Sand/gravel
- Riprap

- Rebar
- Polyvinyl chloride (PVC) liner
- Geotextile
- Piping
- Pumps

As discussed, CCR will be hauled to the Station's on-site landfill for disposal. All other materials will be hauled to an approved off-site disposal facility.

2.10 Design Plans

A copy of the Retrofit Design Plans is provided in Appendix A. These design plans are intended to meet the requirements of Section II of the VDEQ Solid Waste Permitting Submission Instruction No. 27.

Section 3
Site Monitoring Plans

This section was prepared to address the plan requirements of Section III of the VDEQ Solid Waste Permitting Submission Instruction No. 27. However, since this submission instruction is intended for landfill mining operations, not all the requirements of this section apply to the retrofitting of the North and South Basins. This section also incorporates applicable CCR Rule requirements for written retrofit plans (40 CFR 257.102(k)(2)).

3.1 Groundwater Monitoring

A Groundwater Monitoring Plan was prepared under separate cover and is designed to meet the groundwater monitoring requirements of the CCR Rule associated with retrofitting and closing existing CCR surface impoundments.

3.2 Storm Water Discharge Monitoring

Storm water associated with the retrofitted basins will not be discharged from the site. All storm water that accumulates within the basins during retrofitting will be circulated back to the facility via pump for use in various facility processes. Storm water that comes in contact with construction areas that do not flow into the basins will be managed by the Clover Power Station's storm water management system. Erosion and sediment control devices will be installed prior to the start of land-disturbing activities as shown on Sheet S3106 of the retrofit design plans (Appendix A).

Section 4
Retrofit Cost Estimate

4.1 Retrofit Cost Estimate

The estimated cost of retrofitting the North and South Basins as described in this Plan is approximately $10.4M. A more detailed retrofit cost estimate is provided in Appendix C.

4.2 Financial Assurance

The Financial Assurance documents will be updated and submitted annually to VDEQ, in accordance with the Virginia Financial Assurance Regulations for Solid Waste Management Facilities.

Section 5
Certification

I, the undersigned Virginia Professional Engineer, hereby certify that I am familiar with the technical requirements of 40 CFR 257.102. I also certify that it is my professional opinion that, to the best of my knowledge, information, and belief, that the activities outlined in this retrofit plan are in accordance with current good and accepted engineering practice(s) and standard(s) appropriate to the nature of the project and the technical requirements of 40 CFR 257.102 (k)(2).

For the purpose of this document, "certify" and "certification" shall be interpreted and construed to be a "statement of professional opinion". The certification is understood and intended to be an expression of my professional opinion as a Virginia Licensed Professional Engineer, based upon knowledge, information, and belief. The statement(s) of professional opinion are not and shall not be interpreted or construed to be a guarantee or a warranty of the retrofit activities.

R. Kent Nilsson	026477
Printed Name of Professional Engineer	Commonwealth of Virginia License Number
	November 18, 2016
Signature of Professional Engineer	Date

Appendix A
Retrofit Design Plans

CLOVER POWER STATION

RETROFIT - SLUDGE SEDIMENTATION BASINS
ISSUED FOR BID

PREPARED FOR: DOMINION RESOURCES SERVICES, INC.
CLOVER POWER STATION
CLOVER, VIRGINIA

PREPARED BY: TRC ENGINEERS, INC.
GREENVILLE, SOUTH CAROLINA

DATE: NOVEMBER 2016

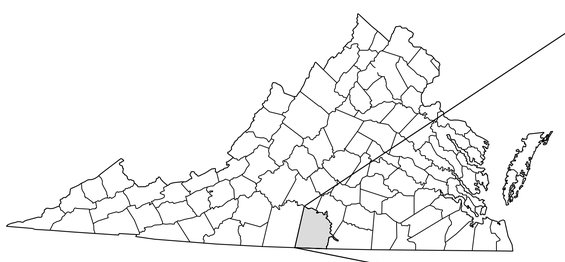

VIRGINIA

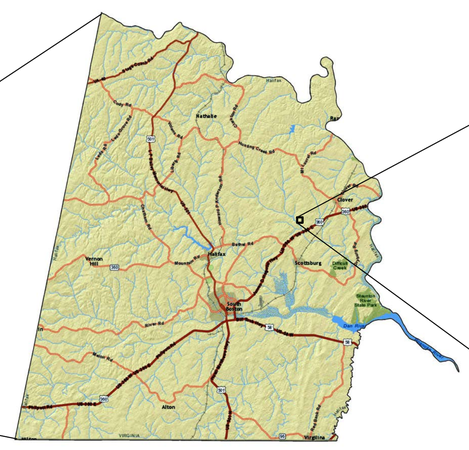

HALIFAX COUNTY

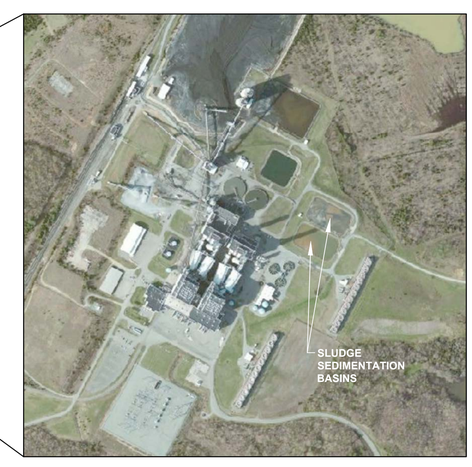

SITE LOCATOR
1" = 600'

SHEET INDEX

SHEET NUMBER	SHEET TITLE
66706-15348-CWSG-S3100	TITLE SHEET
66706-15348-CWSG-S3101	GENERAL NOTES - CIVIL, MECHANICAL, STRUCTURAL
66706-15348-CWSG-S3102	GENERAL NOTES - CIVIL, MECHANICAL, STRUCTURAL
66706-15348-CWSG-S3103	CIVIL STANDARD LEGEND
66706-15348-CWSG-S3104	EXISTING CONDITIONS
66706-15348-CWSG-S3105	SUGGESTED CONSTRUCTION SEQUENCE PLAN
66706-15348-CWSG-S3106	EROSION AND SEDIMENT CONTROL PLAN
66706-15348-CWSG-S3107	OVERVIEW NORTH AND SOUTH BASINS
66706-15348-CWSG-M4000	YARD PIPING PROFILES
66706-15348-CWSG-S3108	NORTH BASIN LINER SUBBASE GRADES
66706-15348-CWSG-S3109	NORTH BASIN BASE AND PAVING
66706-15348-CWSG-S3110	NORTH BASIN CROSS SECTIONS
66706-15348-CWSG-S3111	SOUTH BASIN LINER SUBBASE GRADES
66706-15348-CWSG-S3112	SOUTH BASIN BASE AND PAVING
66706-15348-CWSG-S3113	SOUTH BASIN CROSS SECTIONS
66706-15348-CWSG-S3114	CIVIL DETAILS - NORTH AND SOUTH BASINS
66706-15348-CWSG-S3115	CIVIL DETAILS - NORTH AND SOUTH BASINS
66706-15348-CWSG-S3116	CIVIL DETAILS - SOUTH BASIN
66706-15348-CWSG-S3117	CIVIL DETAILS - SOUTH BASIN
66706-15348-CWSG-S3118	CIVIL DETAILS
66706-15348-CWSG-S3119	CIVIL DETAILS - EROSION AND SEDIMENT CONTROL
66706-15348-CWSG-M2647	MECHANICAL P&ID
66706-15348-CWSG-M4001	PUMP STATION PLAN VIEW
66706-15348-CWSG-M4002	PUMP STATION SECTION VIEWS
66706-15348-CWSG-M4003	FLOW SPLIT BOX PLAN AND SECTIONS
66706-15348-CWSG-M4004	TEMPORARY PUMP STATION PLAN
66706-15348-CWSG-M4005	MECHANICAL DETAILS 1
66706-15348-CWSG-M4006	MECHANICAL DETAILS 2
66706-15348-CWSG-S6200	STRUCTURAL - SLUDGE PUMP STATION
66706-15348-CWSG-S6201	STRUCTURAL - SLUDGE PUMP STATION
66706-15348-CWSG-S6202	STRUCTURAL - FLOW SPLIT BOX
66706-15348-CWSG-S6203	STRUCTURAL - TYPICAL SECTIONS AND DETAILS
66706-15348-CWSG-S6204	STRUCTURAL/ARCHITECTURAL - SECTIONS & DETAILS
66706-15348-CWSG-E1001	ELECTRICAL SYMBOLS AND ABBREVIATIONS
66706-15348-CWSG-E1002	ELECTRICAL SITE PLAN - DEMO
66706-15348-CWSG-E1003	ELECTRICAL SITE PLAN - PROPOSED
66706-15348-CWSG-E1004	ELECTRICAL ONELINE
66706-15348-CWSG-E1005	ELECTRICAL DETAILS AND ENLARGED PLANS
66706-15348-CWSG-E1006	ELECTRICAL DETAILS
66706-15348-CWSG-E1007	ELECTRICAL DETAILS AND RACEWAY SCHEDULE
66706-15348-CWSG-E1008	CABLE AND PANEL SCHEDULE

COMMONWEALTH OF VIRGINIA
R. KENT NILSSON
Lic. No. 026477
11/16/16
PROFESSIONAL ENGINEER

TRC
30 Patewood Drive
Patewood Plaza One, Suite 300
Greenville, SC 29615
Phone: 864.281.0030

22x34 -- ATTACHED BSFS _ wcd.pltcfg -- ATTACHED IMAGES: CAD Cover Sheet_2016 1221.dwg, clouds.png
DRAWING NAME: J:\Dominion Resources\Clover\152002 - Liner Construction - REV\00004\152002 SHT01-TS.dwg -- PLOT DATE: November 15, 2016 - 10:34AM -- LAYOUT: 66706-1

STANDARD CIVIL NOTES

A. GENERAL NOTES

1. SITE LOCATION: CLOVER HALIFAX COUNTY, VIRGINIA.

2. THE TOPOGRAPHIC BASE MAP HAS BEEN CREATED FROM GROUND SURVEY BY TIMMONS GROUP, RICHMOND VA. DATE OF GROUND SURVEY AUGUST 17-18, 2015, AND NOVEMBER 18, 2015.

3. HORIZONTAL DATUM FOR THIS PLAN SET IS REFERENCED TO VIRGINIA STATE PLANE COORDINATE SYSTEM, SOUTH ZONE, NORTH AMERICAN DATUM (NAD 83), US SURVEY FEET.

4. VERTICAL DATUM IS NORTH AMERICAN VERTICAL DATUM 1988 (NAVD 88). CONTOUR INTERVAL IS 2 FEET.

5. BASED ON DRAWING 15348-1STF-S3000, PLANT GRID COORDINATES: N10,000, E20,000 CORRESPOND TO THE FOLLOWING STATE PLANE COORDINATES: NAD 27 - N194,850, E1,939,640. NAD 83 - N3,475,739.36, E11,422,638.32. PLANT NORTH IS 28° EAST OF STATE PLANE NORTH.

6. THE ORIGINAL PLANS FOR THIS PROJECT WERE PREPARED ON FULL SIZE ANSI D SHEETS (22-INCHES X 34-INCHES). THE SPECIFIC SCALE FOR THE INDIVIDUAL UNITS WOULD BE TRUE ONLY ON THE ORIGINAL TRACING. REPRODUCED COPIES, REDUCTIONS OR OTHER METHODS OF PRINTING MAY CHANGE OR ALTER THE SCALE. THE ENGINEER IS NOT RESPONSIBLE FOR SCALE DIMENSIONS UTILIZED BY OTHERS ON THESE PLANS.

7. REFERENCE TO MATERIAL SECTIONS OF THE ROAD AND BRIDGE SPECIFICATIONS APPLY TO THE MOST RECENT VERSION OF THE VIRGINIA DEPARTMENT OF TRANSPORTATION ROAD AND BRIDGE SPECIFICATIONS.

8. PROTECT ALL GROUNDWATER MONITORING WELLS DURING CONSTRUCTION.

9. THE CONTRACTOR SHALL LOCATE, PROTECT, AND MAINTAIN BENCHMARKS, MONUMENTS, AND CONTROL POINTS. RE-ESTABLISH DISTURBED OR DESTROYED ITEMS BY LICENSED LAND SURVEYOR IN THE STATE OF VIRGINIA AT NO ADDITIONAL COST TO OWNER.

10. SECONDARY CONTAINMENT IS REQUIRED FOR ALL FUEL STORAGE. INTENTIONAL RELEASE OF VEHICLE OR EQUIPMENT FLUIDS ONTO THE GROUND IS NOT ALLOWED. CONTAMINATED SOIL RESULTING FROM ACCIDENTAL SPILL TO BE REMOVED AND DISPOSED OF PROPERLY.

B. STORMWATER NOTES

1. THROUGHOUT THE CONSTRUCTION, AND AT THE COMPLETION OF CONSTRUCTION, THE CONTRACTOR SHALL ASSURE THAT DRAINAGE OF STORMWATER RUNOFF IS NOT BLOCKED.

2. DURING CONSTRUCTION, THE STORM WATER RUNOFF FROM ALL DISTURBED AREAS SHALL BE FILTERED BY SILT FENCES AND/OR HAY BALES. THESE TEMPORARY EROSION AND SEDIMENTATION CONTROLS ARE TO REMAIN IN PLACE UNTIL THE DISTURBED AREAS ARE REVEGETATED AND THE AREAS HAVE BECOME PERMANENTLY STABILIZED. ALL TEMPORARY EROSION AND SEDIMENTATION CONTROLS TO BE INSPECTED PERIODICALLY FOR DAMAGE CAUSED BY CONSTRUCTION ACTIVITIES AND FOLLOWING EVERY RAINFALL. DAMAGED OR OBSTRUCTED CONTROLS TO BE REPAIRED/REPLACED AS NECESSARY TO MAINTAIN THEIR PROPER OPERATION. REFER TO EROSION & SEDIMENT CONTROL PLAN.

3. CONTRACTOR SHALL ENSURE EXISTING DRAINAGE PATTERNS ARE MAINTAINED AS SHOWN.

4. ALL SPRING FLOW DISTURBED DURING CONSTRUCTION SHALL BE THE CONTRACTOR'S RESPONSIBILITY TO RESOLVE AND HANDLE ALL SPRING FLOW.

C. SITE GRADING NOTES

1. EXCAVATED MATERIAL MAY BE TEMPORARILY STOCKPILED IN DESIGNATED AREAS AS DIRECTED BY THE OWNER. REINFORCED FILTER FABRIC FENCE TO BE INSTALLED AROUND STOCKPILE ON DOWNSTREAM SIDE AND BOTH SIDES ADJACENT TO THE DOWNSTREAM SIDE. STOCKPILES ARE NOT TO TRAP OR POND WATER. TOPSOIL TO BE STOCKPILED SEPARATELY. ALL EXCESS EXCAVATED MATERIAL THAT IS NOT USED TO BACKFILL THE EXISTING STRUCTURES IS TO BE REMOVED FROM THE SITE AND DISPOSED OF IN PROPER ACCORDANCE W/ ALL REGULATORY AUTHORITIES. CONTRACTOR SHALL NOTIFY VIRGINIA DEPARTMENT OF ENVIRONMENTAL QUALITY AND THE OWNER'S REPRESENTATIVE OF LOCATION OF DISPOSAL BEFORE MATERIAL IS REMOVED.

2. THE DESIGN GRADE ELEVATIONS SHOWN ARE INTENDED TO PROVIDE DRAINAGE AWAY FROM STRUCTURES. MINOR FIELD CHANGES MAY BE NECESSARY TO PROVIDE ADEQUATE DRAINAGE. GRADE UNIFORMLY BETWEEN ELEVATIONS SHOWN TO PROVIDE DRAINAGE.

3. ADJUST MANHOLE COVERS, VALVE BOXES, ELECTRICAL MANHOLES, ETC. TO MATCH PROPOSED FINISHED GRADE.

D. EROSION/SEDIMENTATION NOTES

1. THE CONTRACTOR SHALL INSTALL AND MAINTAIN EROSION/SEDIMENTATION CONTROLS AND NATURAL AREA PROTECTIVE FENCING PRIOR TO ANY SITE PREPARATION WORK (CLEARING, GRUBBING, GRADING, OR EXCAVATION).

2. ALL EROSION AND SEDIMENT CONTROL PRACTICES MUST BE CONSTRUCTED AND MAINTAINED IN ACCORDANCE WITH THE MINIMUM STANDARDS AND SPECIFICATIONS OF THE VIRGINIA EROSION AND SEDIMENT CONTROL HANDBOOK AND THE VIRGINIA REGULATIONS VR 625-02-00 EROSION AND SEDIMENT CONTROL REGULATIONS.

3. UNLESS OTHERWISE INDICATED, ALL VEGETATIVE AND STRUCTURAL EROSION AND SEDIMENT CONTROL PRACTICES WILL BE CONSTRUCTED AND MAINTAINED ACCORDING TO MINIMUM STANDARDS AND SPECIFICATIONS OF THE VIRGINIA EROSION AND SEDIMENT CONTROL HANDBOOK AND VIRGINIA REGULATIONS 4VAC50-30, EROSION AND SEDIMENT CONTROL REGULATIONS.

4. THE CONTRACTOR WILL BE RESPONSIBLE FOR THE INSTALLATION AND MAINTENANCE OF ALL EROSION AND SEDIMENT CONTROL PRACTICES AT ALL TIMES.

5. ALL TEMPORARY EROSION AND SEDIMENT CONTROL MEASURES SHALL BE REMOVED WITHIN 30 DAYS AFTER FINAL SITE STABILIZATION OR AFTER THE TEMPORARY MEASURES ARE NO LONGER NEEDED. TRAPPED SEDIMENT AND THE DISTURBED SOIL AREAS RESULTING FROM THE DISPOSITION OF TEMPORARY MEASURES SHALL BE PERMANENTLY STABILIZED TO PREVENT FURTHER EROSION AND SEDIMENTATION.

E. SITE SPECIFIC NOTES

1. THE CONTRACTOR WILL PROVIDE ALL CONSTRUCTION STAKING SERVICES FOR THE PROJECT. THE COST OF THESE SERVICES WILL BE REFLECTED IN THE UNIT PRICE AMOUNT BID IN THE PROPOSAL.

2. CONTRACTOR SHALL ADJUST ALL EXISTING UTILITIES AS REQUIRED FOR THE INSTALLATION OF THE PROPOSED IMPROVEMENTS INCLUDING RELOCATING THE UTILITIES IF NECESSARY.

3. MANHOLE RIM ELEVATIONS SHOWN ON PLAN AND PROFILE DRAWINGS ARE APPROXIMATE. CONTRACTOR TO FIELD VERIFY.

4. THE CONTRACTOR SHALL IMMEDIATELY REMOVE ALL SURFACE OR SEEPAGE WATER FROM SEWERS, DRAINS, DITCHES, AND OTHER SOURCES WHICH MAY ACCUMULATE DURING THE EXCAVATION AND CONSTRUCTION WORK BY PROVIDING THE NECESSARY UNDERDRAINS OR OTHERWISE AND BY DOING THE NECESSARY PUMPING, BAILING OR DRAINING. THE CONTRACTOR SHALL HAVE AVAILABLE AT ALL TIMES SUFFICIENT EQUIPMENT IN PROPER WORKING ORDER FOR DOING THE WORK HEREIN REQUIRED. ALL WATER REMOVED FROM EXCAVATIONS SHALL BE DISPOSED OF IN AN APPROVED MANNER SO AS TO NOT CREATE UNSANITARY CONDITIONS NOR TO INTERFERE UNDULY WITH THE USE OF STREETS, PRIVATE DRIVEWAYS, OR ENTRANCES. PUMPING, BAILING, DRAINING, UNDERDRAINS, DITCHES, ETC., SHALL BE CONSIDERED AS INCIDENTAL WORK AND WILL NOT BE PAID FOR AS SEPARATE ITEMS, BUT THEIR COST SHALL BE INCLUDED IN THE CONTRACT PRICES BID IN THE PROPOSAL FOR THE VARIOUS BID ITEMS.

5. A GEOTECHNICAL REPORT ENTITLED "SLUDGE SEDIMENTATION BASINS RETROFIT GEOTECHNICAL EXPLORATION" HAS BEEN PROVIDED AS AN APPENDIX OF THE SPECIFICATIONS. THIS REPORT IS FOR THE CONTRACTOR'S INFORMATION ONLY. DOMINION AND THE ENGINEER DO NOT GUARANTEE OR WARRANT THAT SOIL CONDITIONS THROUGHOUT THE PROJECT LIMITS WILL BE CONSISTENT WITH THE GEOTECHNICAL REPORT. THE CONTRACTOR IS RESPONSIBLE FOR DETERMINING THE SOIL CONDITIONS. FOR THE PURPOSE OF PREPARING HIS BID, ALL EXCAVATION WILL BE UNCLASSIFIED.

6. THE CONTRACTOR WILL OWN THE PROJECT UNTIL ACCEPTANCE BY THE OWNER. HE SHALL ARRANGE AND PURCHASE, AS REQUIRED, INSURANCE FOR FLOOD OR ANY OTHER DAMAGES TO HIS WORK DURING CONSTRUCTION.

7. POWER POLES TO BE BRACED AT CONTRACTOR'S EXPENSE. THE CONTRACTOR SHALL NOTIFY/COORDINATE WITH THE APPROPRIATE UTILITY COMPANY.

STANDARD CIVIL NOTES (CONTINUED)

F. GENERAL CONSTRUCTION NOTES

1. NO OPEN BURNING OR USE OF EXPLOSIVES IS PERMITTED ON THIS PROJECT.

2. THESE PLANS DO NOT EXTEND TO OR INCLUDE DESIGNS OR SYSTEMS PERTAINING TO THE SAFETY OF THE CONSTRUCTION CONTRACTOR OR ITS EMPLOYEES, AGENTS OR REPRESENTATIVES IN THE PERFORMANCE OF THE WORK. THE SEAL OF THE REGISTERED PROFESSIONAL ENGINEER(S) HEREON DOES NOT EXTEND TO ANY SUCH SAFETY SYSTEMS THAT MAY NOW OR HEREAFTER BE INCORPORATED IN THE WORK.

3. A PRE-CONSTRUCTION CONFERENCE IS TO BE HELD PRIOR TO BEGINNING CONSTRUCTION. THIS CONFERENCE SHALL TAKE PLACE AT A LOCATION SELECTED BY OWNER & ENGINEER. CONTRACTOR TO ARRANGE A MEETING DATE WITH THE OWNER AT LEAST SEVEN DAYS PRIOR TO THE MEETING TIME.

4. LOCATION OF EXISTING UTILITIES SHOWN ON PLANS WAS COMPILED FROM RECORD INFORMATION. NO WARRANTY IS IMPLIED AS TO THE ACTUAL LOCATION OF EXISTING UTILITIES. CONTRACTOR TO FIELD VERIFY LOCATIONS OF EXISTING UTILITIES PRIOR TO COMMENCEMENT OF CONSTRUCTION.

5. WHEN UNLOCATED OR INCORRECTLY LOCATED UNDERGROUND PIPING OR A BREAK IN A LINE OR OTHER UTILITIES AND SERVICES ARE ENCOUNTERED DURING SITE WORK OPERATIONS, THE CONTRACTOR SHALL NOTIFY THE OWNER, ENGINEER, AND APPLICABLE UTILITY COMPANY IMMEDIATELY TO OBTAIN PROCEDURE DIRECTIONS. THE CONTRACTOR SHALL COOPERATE WITH THE OWNER, ENGINEER, AND APPLICABLE UTILITY COMPANY IN MAINTAINING ACTIVE SERVICES IN OPERATION.

6. THE CONTRACTOR SHALL MAINTAIN ACCESS TO PUBLIC AND PRIVATE FACILITIES DURING CONSTRUCTION. CONSTRUCTION ACTIVITIES TO BE COORDINATED WITH THE OWNER.

7. THE CONTRACTOR SHALL COORDINATE INTERRUPTIONS OF ALL UTILITIES AND SERVICES WITH OWNER, ENGINEER, AND APPLICABLE UTILITY COMPANY OR COMPANIES. ALL WORK SHALL BE IN ACCORDANCE WITH THE REQUIREMENTS OF THE APPLICABLE UTILITY COMPANY OR AGENCY INVOLVED.

8. EXISTING PAVING, BUILDINGS, AND OTHER ITEMS SHOWN ON PLANS NOT SPECIFICALLY RELATED TO THE WORK OF THE CONTRACTOR IS FOR INFORMATION ONLY.

9. COORDINATES SHOWN FOR STRUCTURE LOCATIONS ARE REFERENCED TO OUTSIDE FACE OF EXTERIOR WALL AT GRADE OR TO CENTERLINE OF STRUCTURE, UNLESS NOTED OTHERWISE ON PLANS.

10. EXISTING SURFACE AND SUBSURFACE STRUCTURES (GAS MAINS, WATER MAINS, STORM SEWERS, TELEPHONE CABLES, ETC.) ARE SHOWN ON THE PLANS IF THEIR LOCATION HAS BEEN DETERMINED, BUT IT SHALL BE THE RESPONSIBILITY OF THE CONTRACTOR TO AVOID DAMAGING THESE EXISTING STRUCTURES WHETHER OR NOT THEY ARE SHOWN ON THE PLANS. THE OWNER AND ENGINEER ASSUME NO RESPONSIBILITY FOR FAILURE TO SHOW ANY OR ALL OF THESE STRUCTURES ON THE PLANS OR TO SHOW THEM IN THEIR EXACT LOCATION. IF ANY STRUCTURE IS DAMAGED BY THE CONTRACTOR, IT SHALL BE HIS RESPONSIBILITY TO REPAIR THE DAMAGE AT HIS OWN EXPENSE AND RESTORE THE STRUCTURE TO ITS ORIGINAL CONDITION.

11. CONTRACTOR SHALL LOCATE AND DETERMINE (VERIFY IF DEPTH IS SHOWN IN PLANS) ELEVATION OF ALL EXISTING UNDERGROUND UTILITIES A MINIMUM OF 500 FEET AHEAD OF TRENCHING. IF A UTILITY IF FOUND TO BE IN CONFLICT WITH PROPOSED GRADES, THE ENGINEER SHALL BE CONTACTED AND GRADES ADJUSTED TO AVOID CONFLICT.

12. IT SHALL BE THE CONTRACTOR'S RESPONSIBILITY TO VERIFY LOCATIONS, ELEVATIONS AND DIMENSIONS OF ADJACENT AND/OR CONFLICTING UTILITIES IN ADVANCE OF CONSTRUCTION IN ORDER THAT ADJUSTMENTS CAN BE MADE TO PROVIDE ADEQUATE CLEARANCES, IF REQUIRED. THE CONTRACTOR SHALL PRESERVE AND PROTECT PUBLIC UTILITIES AT ALL TIMES DURING CONSTRUCTION. ANY DAMAGE TO UTILITIES RESULTING FROM THE CONTRACTOR'S OPERATIONS SHALL BE RESTORED AT HIS EXPENSE. THE ENGINEER SHALL BE NOTIFIED WHEN PROPOSED FACILITY GRADES CONFLICT WITH EXISTING UTILITY GRADES.

13. ALL CONCEPTS, IDEAS, DESIGNS, ARRANGEMENTS, AND PLANS INDICATED OR REPRESENTED BY THESE INSTRUMENTS, AS OUTLINED ON THE TITLE SHEET INDEX, AND BY ANY ADDENDUM ARE OWNED BY AND ARE THE PROPERTY OF TRC AND WERE CREATED AND DEVELOPED FOR THE USE ON AND IN CONNECTION WITH THE SPECIFIED PROJECT. THESE CONCEPTS, IDEAS, DESIGNS ARRANGEMENTS OR PLANS SHALL NOT BE USED BY ANY PERSON, FIRMITTES OR CORPORATION FOR ANY PURPOSE WHATSOEVER WITHOUT THE WRITTEN PERMISSION AND CONSENT OF TRC.

G. SUBGRADE PREPARATION

1. REFERENCE TRC "SLUDGE SEDIMENTATION BASINS RETROFIT GEOTECHNICAL EXPLORATION" GEOTECHNICAL REPORT DATED JANUARY 2016 IN AN APPENDIX OF THE SPECIFICATIONS.

2. SUBMIT PROPOSED CONTROL FILL TO ENGINEER FOR REVIEW AND APPROVAL. AT A MINIMUM INCLUDE THE SOURCE OF MATERIALS, GRADATION, AND PROCTOR LABORATORY TEST RESULTS FOR DENSITY AND MOISTURE. CONTROLLED FILL SHALL CONSIST OF A LOW PLASTICITY SOIL/ROCK MATERIAL.

3. SURFICIAL TOPSOIL, VEGETATION, ORGANIC MATTER, AND DEBRIS SHOULD BE REMOVED FROM AREAS WHERE WORK IS BEING PERFORMED BY THE CONTRACTOR. FROZEN, SATURATED, DISTURBED, AND UNSTABLE SUBGRADE SHOULD ALSO BE REMOVED IMMEDIATELY PRIOR TO FILL PLACEMENT AND BERM CONSTRUCTION.

4. SUBGRADE PREPARATION AND PROOF-ROLLING SHOULD BE PERFORMED UNDER THE OBSERVATION OF THE ENGINEER'S REPRESENTATIVE TO DOCUMENT ACCEPTABLE SUBGRADE CONDITIONS. PROOF ROLL THE SUBGRADE OF BERMS AND STRUCTURES TO CONFIRM THAT IT IS STABLE SUBGRADE PRIOR TO FILL PLACEMENT. THE PROOF-ROLL CAN BE PERFORMED USING A LOADED HAUL TRUCK OR SMOOTH DRUM COMPACTOR.

5. FINE-GRAINED SOILS ENCOUNTERED IN THIS EXPLORATION ARE SUSCEPTIBLE TO WEAKENING AND DISTURBANCE FROM REPEATED CONSTRUCTION TRAFFIC AND INCREASED WATER CONTENTS. THE SUSCEPTIBILITY WILL DEPEND LARGELY ON CLIMATIC CONDITIONS (I.E., THE AMOUNT OF PRECIPITATION) DURING CONSTRUCTION.

6. THE HIGH PLASTICITY SOILS OBSERVED AT THE SITE MAY SWELL AND HEAVE IF EXPOSED TO EXCESS MOISTURE. CONSTRUCTION EXCAVATIONS AND GRADING SHOULD BE PERFORMED TO SHEET FLOW STORMWATER AWAY FROM EXPOSED SUBGRADE OR PUMP WATER FROM LOW AREAS. DO NOT ALLOW WATER TO POND IN EXPOSED AREAS.

7. THE SUBGRADE SHOULD BE INSPECTED TO REMOVE GRAVEL SIZED PARTICLES GREATER THAN 3 INCHES IN DIAMETER PRIOR TO PLACING THE CLAY LINER COMPONENT OF THE COMPOSITE LINER.

H. SOIL PLACEMENT AND COMPACTION.

1. THE MAJORITY OF THE NEAR SURFACE SOILS ENCOUNTERED DURING THE GEOTECHNICAL EXPLORATION WERE HIGH PLASTICITY CLAY AND HIGH PLASTICITY SILT. THE MOISTURE-DENSITY RELATIONSHIPS FOR THE HIGH PLASTICITY CLAY ARE PROVIDED IN THE GEOTECHNICAL REPORT ENTITLED "SLUDGE SEDIMENTATION BASINS RETROFIT GEOTECHNICAL EXPLORATION" IN AN APPENDIX OF THE SPECIFICATIONS.

2. SOIL AND FILL SHOULD BE MOISTENED TO NEAR-OPTIMUM MOISTURE CONTENT, AND PLACED IN LOOSE LIFTS NOT EXCEEDING 9 INCHES IN THICKNESS. SURFACES TO RECEIVE FILL SHOULD BE SCARIFIED TO A DEPTH OF 6 INCHES PRIOR TO FILL PLACEMENT AND COMPACTED TO AT LEAST 95 PERCENT OF ITS MAXIMUM DRY UNIT WEIGHT (STANDARD PROCTOR DENSITY, ASTM D698). THE SOIL/FILL SHOULD BE COMPACTED USING SUITABLE EQUIPMENT FOR THE SOIL TYPE TO THE REQUIRED DENSITY. THE GENERAL FILL AND DENSE AGGREGATE BASE SHOULD BE COMPACTED TO AT LEAST 95 PERCENT OF ITS MAXIMUM DRY UNIT WEIGHT (STANDARD PROCTOR DENSITY) AT A MOISTURE CONTENT RANGING BETWEEN THE OPTIMUM MOISTURE CONTENT AND THE OPTIMUM MINUS 3 PERCENT. CLAY FILL SHALL BE COMPACTED TO AT LEAST 95 PERCENT OF ITS MAXIMUM DRY UNIT WEIGHT (STANDARD PROCTOR DENSITY) AT A MOISTURE CONTENT AT LEAST WET OF OPTIMUM TO ACHIEVE A MAXIMUM HYDRAULIC CONDUCTIVITY OF 1×10^{-7} CM/S.

3. REFER TO SPECIFICATION 02320 SUBPART 3.8 FOR QUALITY CONTROL REQUIREMENTS FOR FILL PLACEMENT.

STANDARD CIVIL NOTES (CONTINUED)

I. JOINTED PLAIN CONCRETE PAVEMENT (JPCP)

1. GEOMEMBRANE INTEGRITY TESTING RESULTS SHALL BE PROVIDED TO THE ENGINEER FOR ACCEPTANCE PRIOR TO INSTALLING JPCP OR STRUCTURES ABOVE THE LINER SYSTEM.

2. PAVEMENT THICKNESS DETERMINED USING THE AMERICAN ASSOCIATION OF STATE HIGHWAY TRANSPORTATION OFFICIALS EMPIRICAL RIGID PAVEMENT DESIGN METHOD.

3. LOADING CONDITIONS BASED ON A WHEEL LOADER WITH TWO 24 KIP SINGLE DRIVE AXLES, AND 44 KIP SEMI-TRAILERS (10 KIP SINGLE STEERING AXLE, 16 KIP TANDEM DRIVE AXLE, AND 44 KIP QUAD TRAILER AXLE).

4. PAVEMENT DESIGN BASED ON LOADING OF EQUIVALENT SINGLE AXLE LOADS (ESALS) WHERE AN ESAL IS A 18-KIP AXLE LOAD. THE BASIN BOTTOM CONCRETE WAS DESIGNED BASED ON 2,450,900 ESALS. THIS ESAL LOADING IS BASED ON A 30 YEAR SERVICE LIFE WHERE YEARLY TRAFFIC CONSISTS OF 3,000 TRIPS OF TRACTOR SEMI-TRAILERS AND 11,000 TRIPS OF THE WHEEL LOADERS SHOWN ON DETAIL 3 OF SHEET S3118.

5. BASE STRENGTH REQUIREMENTS BASED ON A 28-DAY COMPRESSIVE STRENGTH DETERMINED ON A 6 INCH X 12 INCH CYLINDRICAL SPECIMENS MADE AND TESTED IN ACCORDANCE WITH ASTM C31/31M AND C39/39M ARE 4,000 PSI AS PROVIDED IN SPECIFICATION 03050.

1

6. CONCRETE SHALL BE PLACED IN A MANNER TO PROTECT THE INTEGRITY OF THE GEOSYNTHETIC LINER SYSTEM. EQUIPMENT CANNOT OPERATE ABOVE THE GEOSYNTHETICS UNLESS IT MEETS THE SOIL COVER THICKNESS AND GROUND PRESSURE TOLERANCES IN SECTION 7.5 OF THE CONSTRUCTION QUALITY ASSURANCE PLAN.

7. QUALITY ASSURACE/QUALITY CONTROL TESTING AND QUALITY ASSURANCE INSPECTIONS ARE REQUIRED. CONTRACTOR SHALL COORDINATE WITH ENGINEER FOR INSPECTION OF SUBGRADE PREPARATION, REINFORCING STEEL, AND CONCRETE PLACEMENT.

COMMONWEALTH OF VIRGINIA
K. KENT NILSSON
Lic. No. 026477
11/16/16
PROFESSIONAL ENGINEER

REV	DESCRIPTION	DATE	DSGN	DRWN	CHKD	DSGN SUPV	PROJ ENGR	CIVIL ENGR	ELEC ENGR	MECH ENGR	ARCH	E.M. ENGR	I&C ENGR
1	REVISED LINER SYSTEM	11 16 2016	DM	LLS	JNH		NA	RKN	CS	DS			
0	ISSUED FOR BID	04 08 2016	DM	LLS	JNH		NA	RKN	CS	DS			

Dominion

TRC

POWER GENERATION ENGINEERING
RICHMOND, VIRGINIA

GENERAL NOTES – CIVIL, MECHANICAL, STRUCTURAL

RETROFIT – SLUDGE SEDIMENTATION BASINS
CLOVER, VIRGINIA

DSGN SMOBLEY	DSGN SUPV ———	DATE NOVEMBER 2016 DGNSPEC FOR FILE VERIFICATION	
DRWN L. STORMER	ENGR SUPV ———	DRAWING NO.	REV.
CHKD JH	PROJ ENGR ———	66706–15348–CWSG–S3101	1
DISPL ENGR ---	SCALE: AS NOTED	UNLESS OTHERWISE NOTED	SH 2 OF 41

J:\Dominion Resources\Clover\232002 - Liner Construction - REV\000004\232002.SHT02-SN.dwg --- PLOT DATE: November 15, 2016 - 10:34AM --- LAYOUT: 66706-15348-CWSG-S3101

STANDARD STRUCTURAL NOTES

A. **DESIGN CRITERIA**

BUILDING CODE	2009 INTERNATIONAL BUILDING CODE
IMPORTANCE	III
ALLOWABLE BEARING	3,000 PSF
SOIL MODULUS	150 PSI / IN
GEOTECHNICAL	TRC "EMERGENCY SLUDGE STORAGE PONDS RETROFIT GEOTECHNICAL EXPLORATION" REPORT DATED SEPTEMBER, 2015.
LIVE LOAD, STRUCTURAL SLAB	200 PSF

LIVE LOADS, HDG GRATING REFERENCES S6204 AND SPECIFICATIONS 05205 AND 05511.

SEISMIC LOADS

- IMPORTANCE (IE)	1.0
- DESIGN CATEGORY	B
- SOIL CLASS	D (STIFF SOILS)
- SS	0.124 G
- S1	0.052 G
- SDS	0.132 G
- SD1	0.084 G
ANALYSIS PROCEDURE	LRFD IBC 2009 LOAD COMBINATIONS

B. **SUBGRADE PREPARATION**

1.0 REFERENCE TRC "EMERGENCY SLUDGE STORAGE PONDS RETROFIT GEOTECHNICAL EXPLORATION" REPORT DATED SEPTEMBER, 2015.

2.0 CONTROLLED FILL AND COMPACTION. CONTROLLED FILL OR BACKFILL SHALL BE PLACED IN 8-INCH LOOSE LIFTS AND COMPACTED TO 95% OF THE MAXIMUM DRY DENSITY AS DETERMINED BY THE STANDARD PROCTOR LABORATORY TEST (ASTM D 698).

2.1 SUBMIT PROPOSED CONTROL FILL TO ENGINEER FOR REVIEW AND APPROVAL. AT A MINIMUM INCLUDE THE SOURCE OF MATERIALS, GRADATION, AND PROCTOR LABORATORY TEST RESULTS FOR DENSITY AND MOISTURE. CONTROLLED FILL SHALL CONSIST OF A LOW PLASTICITY SOIL/ROCK MATERIAL.

3.0 SURFICIAL TOPSOIL, VEGETATION, ORGANIC MATTER, AND DEBRIS SHOULD BE REMOVED FROM AREAS WHERE WORK IS BEING PERFORMED BY THE CONTRACTOR. FROZEN, SATURATED, DISTURBED, AND UNSTABLE SUBGRADE SHOULD ALSO BE REMOVED IMMEDIATELY PRIOR TO FILL PLACEMENT AND BERM CONSTRUCTION.

4.0 SUBGRADE PREPARATION AND PROOF-ROLLING SHOULD BE PERFORMED UNDER THE OBSERVATION OF THE ENGINEER'S REPRESENTATIVE TO DOCUMENT ACCEPTABLE SUBGRADE CONDITIONS. PROOF ROLL THE SUBGRADE OF BERMS AND STRUCTURES TO CONFIRM THAT IT IS STABLE SUBGRADE PRIOR TO FILL PLACEMENT. THE PROOF-ROLL CAN BE PERFORMED USING A LOADED HAUL TRUCK OR SMOOTH DRUM COMPACTOR.

5.0 FINE-GRAINED SOILS ENCOUNTERED IN THIS EXPLORATION ARE SUSCEPTIBLE TO WEAKENING AND DISTURBANCE FROM REPEATED CONSTRUCTION TRAFFIC AND INCREASED WATER CONTENTS. THE SUSCEPTIBILITY WILL DEPEND LARGELY ON CLIMATIC CONDITIONS (I.E., THE AMOUNT OF PRECIPITATION) DURING CONSTRUCTION.

6.0 THE HIGH PLASTICITY SOILS OBSERVED AT THE SITE MAY SWELL AND HEAVE IF EXPOSED TO EXCESS MOISTURE. CONSTRUCTION EXCAVATIONS AND GRADING SHOULD BE PERFORMED TO SHEET FLOW STORMWATER AWAY FROM EXPOSED SUBGRADE OR PUMP WATER FROM LOW AREAS. DO NOT ALLOW WATER TO POND IN EXPOSED AREAS.

7.0 THE SUBGRADE SHOULD BE INSPECTED TO REMOVE GRAVEL SIZED PARTICLES GREATER THAN 3 INCHES IN DIAMETER PRIOR TO PLACING THE CLAY LINER COMPONENT OF THE COMPOSITE LINER.

8.0 SOIL PLACEMENT AND COMPACTION.

8.1 THE MAJORITY OF THE NEAR SURFACE SOILS ENCOUNTERED DURING THE SUBSURFACE EXPLORATION WERE HIGH PLASTICITY CLAY AND HIGH PLASTICITY SILT. THE MOISTURE-DENSITY RELATIONSHIPS FOR THE HIGH PLASTICITY CLAY ARE PROVIDED IN APPENDIX B.

8.2 SOIL AND FILL SHOULD BE MOISTENED TO NEAR-OPTIMUM MOISTURE CONTENT, AND PLACED IN LOOSE LIFTS NOT EXCEEDING 9 INCHES IN THICKNESS. SURFACES TO RECEIVE FILL SHOULD BE SCARIFIED TO A DEPTH OF 6 INCHES PRIOR TO FILL PLACEMENT AND COMPACTED TO AT LEAST 95 PERCENT OF ITS MAXIMUM DRY UNIT WEIGHT (STANDARD PROCTOR DENSITY). THE SOIL/FILL SHOULD BE COMPACTED USING SUITABLE EQUIPMENT FOR THE SOIL TYPE TO THE REQUIRED DENSITY. THE SOIL/FILL SHOULD BE COMPACTED TO AT LEAST 95 PERCENT OF ITS MAXIMUM DRY UNIT WEIGHT (STANDARD PROCTOR DENSITY) AT A MOISTURE CONTENT RANGING BETWEEN THE OPTIMUM MOISTURE CONTENT AND THE OPTIMUM MINUS 3 PERCENT.

9.0 IT IS RECOMMENDED THAT THE MOISTURE-DENSITY CONDITIONS OF THE FILL COMPACTION BE VERIFIED USING IN-SITU TEST METHODS.

C. **CONCRETE**

1.0 SUBMITTALS. CONTRACTOR SHALL SUBMIT SHOP DRAWINGS FOR REINFORCING STEEL AND CONCRETE MIX PRIOR TO START OF CONCRETE WORK. ALLOW FOURTEEN (14) CALENDAR DAYS FOR REVIEW AND COMMENT. INCLUDE REINFORCING STEEL FOR ALL STRUCTURES.

~~1.1 PRODUCT DATA. FOR EACH TYPE OF MANUFACTURED MATERIAL AND PRODUCT INDICATED.~~

1.2 PRODUCT SOURCE. FOR EACH TYPE OF MANUFACTURED MATERIAL AND PRODUCT INDICATED. 1

1.3 DESIGN MIXES. FOR EACH CONCRETE MIX. INCLUDE ALTERNATE MIX DESIGNS WHEN CHARACTERISTICS OF MATERIALS, PROJECT CONDITIONS, WEATHER, TEST RESULTS, OR OTHER CIRCUMSTANCES WARRANT ADJUSTMENTS. INDICATE AMOUNTS OF MIX WATER TO BE WITHHELD FOR LATER ADDITION AT PROJECT SITE.

1.4 STEEL REINFORCEMENT SHOP DRAWINGS. DETAILS OF FABRICATION, BENDING, AND PLACEMENT, PREPARED ACCORDING TO ACI 350-06 AND 315. INCLUDE MATERIAL, GRADE, BAR SCHEDULES, STIRRUP SPACING, BENT BAR DIAGRAMS, ARRANGEMENT, AND SUPPORTS OF CONCRETE REINFORCEMENT. INCLUDE SPECIAL REINFORCEMENT REQUIRED FOR OPENINGS THROUGH CONCRETE STRUCTURES.

1.5 TESTING AGENCY REPORTS. TESTING AGENCY NAME, LOCATION, AND QUALIFICATIONS. TESTING AGENCY SHALL REPORT RESULTS OF CONCRETE AND CONCRETE MATERIALS TESTS AND INSPECTIONS PERFORMED DURING THE COURSE OF THE WORK TO OWNER, ENGINEER, CONTRACTOR, AND THE CONCRETE SUPPLIER. STRENGTH TEST REPORTS SHALL INCLUDE LOCATION IN THE WORK WHERE THE BATCH REPRESENTED BY TEST WAS DEPOSITED AND THE BATCH TICKET NUMBER. REPORTS OF STRENGTH TESTS SHALL INCLUDE DETAILED INFORMATION OF STORAGE AND CURING OF SPECIMENS BEFORE TESTING. FINAL REPORTS SHALL BE PROVIDED WITHIN 7 DAYS OF TEST COMPLETION.

1.6 WELDING CERTIFICATES. COPIES OF CERTIFICATES FOR WELDING PROCEDURES AND PERSONNEL.

1.7 MATERIAL TEST REPORTS. FROM A QUALIFIED TESTING AGENCY INDICATING AND INTERPRETING TEST RESULTS FOR COMPLIANCE OF THE FOLLOWING WITH REQUIREMENTS INDICATED, BASED ON COMPREHENSIVE TESTING OF CURRENT MATERIALS CEMENTITIOUS MATERIALS AND AGGREGATES; SHRINKAGE TEST RESULTS; CURING MATERIALS; FLOOR AND SLAB TREATMENTS; WATERSTOPS; AND PLACEMENT.

2.0 BEFORE PLACING CONCRETE, VERIFY THAT INSTALLATION OF FORMWORK, REINFORCEMENT, AND EMBEDDED ITEMS IS COMPLETE AND THAT REQUIRED INSPECTIONS HAVE BEEN PERFORMED.

2.1 DO NOT ADD WATER TO CONCRETE DURING DELIVERY, AT PROJECT SITE, OR DURING PLACEMENT, UNLESS APPROVED BY ENGINEER. DO NOT ADD WATER TO CONCRETE AFTER ADDING HIGH-RANGE WATER-REDUCING ADMIXTURES.

2.2 DO NOT USE VIBRATION TO CONCRETE DURING CONCRETE INTO FORMS.

2.3 DEPOSIT CONCRETE CONTINUOUSLY OR IN LAYERS OF SUCH THICKNESS THAT NO NEW CONCRETE WILL BE PLACED ON CONCRETE THAT HAS HARDENED ENOUGH TO CAUSE SEAMS OR PLANES OF WEAKNESS. IF A SECTION CANNOT BE PLACED CONTINUOUSLY, PROVIDE CONSTRUCTION JOINTS AS SPECIFIED. DEPOSIT CONCRETE TO AVOID SEGREGATION.

STANDARD STRUCTURAL NOTES (CONTINUED)

2.4 DEPOSIT AND CONSOLIDATE CONCRETE FOR FLOORS AND SLABS IN A CONTINUOUS OPERATION, WITHIN LIMITS OF CONSTRUCTION JOINTS, UNTIL PLACEMENT OF A PANEL OR SECTION IS COMPLETE.

2.5 CONSOLIDATE CONCRETE DURING PLACEMENT OPERATIONS SO CONCRETE IS THOROUGHLY WORKED AROUND REINFORCEMENT AND OTHER EMBEDDED ITEMS AND INTO CORNERS.

2.6 MAINTAIN REINFORCEMENT IN POSITION ON CHAIRS DURING CONCRETE PLACEMENT.

2.7 SCREED SLAB SURFACES WITH A STRAIGHTEDGE AND STRIKE OFF TO CORRECT ELEVATIONS.

2.8 SLOPE SURFACES UNIFORMLY TO DRAINS WHERE REQUIRED.

2.9 BEGIN INITIAL FLOATING USING BULL FLOATS OR DARBIES TO FORM A UNIFORM AND OPEN-TEXTURED SURFACE PLANE, FREE OF HUMPS OR HOLLOWS, BEFORE EXCESS MOISTURE OR BLEED-WATER APPEARS ON THE SURFACE. DO NOT FURTHER DISTURB SLAB SURFACES BEFORE STARTING FINISHING OPERATIONS.

2.10 COLD-WEATHER PLACEMENT. COMPLY WITH ACI 306.1 AND AS FOLLOWS. PROTECT CONCRETE WORK FROM PHYSICAL DAMAGE OR REDUCED STRENGTH THAT COULD BE CAUSED BY FROST, FREEZING ACTIONS, OR LOW TEMPERATURES. DO NOT USE FROZEN MATERIALS OR MATERIALS CONTAINING ICE OR SNOW. DO NOT PLACE CONCRETE ON FROZEN SUBGRADE OR ON SUBGRADE CONTAINING FROZEN MATERIALS. DO NOT USE CALCIUM CHLORIDE, SALT, OR OTHER MATERIALS CONTAINING ANTIFREEZE AGENTS OR CHEMICAL ACCELERATORS, UNLESS OTHERWISE SPECIFIED AND APPROVED IN MIX DESIGNS.10.0 CONCRETE TEMPERATURE: WHEN THE AVERAGE OF THE HIGHEST AND LOWEST AMBIENT AIR TEMPERATURE DURING THE PERIOD FROM MIDNIGHT TO MIDNIGHT IS EXPECTED TO DROP BELOW 40°F FOR MORE THAN THREE SUCCESSIVE DAYS, DELIVER CONCRETE TO MEET THE FOLLOWING MINIMUM TEMPERATURES IMMEDIATELY AFTER PLACEMENT:

2.11 55°F FOR SECTIONS LESS THAN 12 IN. IN THE LEAST DIMENSION;

2.12 50°F FOR SECTIONS 12 TO 36 IN. IN THE LEAST DIMENSION;

2.13 45°F FOR SECTIONS 36 TO 72 IN. IN THE LEAST DIMENSION; AND

2.14 40°F FOR SECTIONS GREATER THAN 72 IN. IN THE LEAST DIMENSION.

2.15 THE TEMPERATURE OF CONCRETE AS PLACED SHALL NOT EXCEED THESE VALUES BY MORE THAN 20°F. THESE MINIMUM REQUIREMENTS MAY BE TERMINATED WHEN TEMPERATURES ABOVE 50°F OCCUR DURING MORE THAN HALF OF ANY 24-HOUR DURATION. UNLESS OTHERWISE SPECIFIED OR PERMITTED, THE TEMPERATURE OF CONCRETE AS DELIVERED SHALL NOT EXCEED 90°F.

2.16 WHEN REQUIRED FOR CONCRETE EXPOSED TO DEICING CHEMICALS, THE MAXIMUM WEIGHT OF FLY ASH, NATURAL POZZOLANS, SILICA FUME, OR SLAG CEMENT THAT IS INCLUDED IN THE CONCRETE SHALL NOT EXCEED THE PERCENTAGES OF THE TOTAL WEIGHT OF CEMENTITIOUS MATERIALS GIVEN IN TABLE 5.2.2.9.1 OF ACI 350.5.

2.17 HOT-WEATHER PLACEMENT. PLACE CONCRETE ACCORDING TO RECOMMENDATIONS IN ACI 305R AND AS FOLLOWS, WHEN HOT-WEATHER CONDITIONS EXIST. COOL INGREDIENTS BEFORE MIXING TO MAINTAIN CONCRETE TEMPERATURE BELOW 90 DEGREE F AT TIME OF PLACEMENT. CHILLED MIXING WATER OR CHOPPED ICE MAY BE USED TO CONTROL TEMPERATURE, PROVIDED WATER EQUIVALENT OF ICE IS CALCULATED TO TOTAL AMOUNT OF MIXING WATER. USING LIQUID NITROGEN TO COOL CONCRETE IS CONTRACTOR'S OPTION. COVER STEEL REINFORCEMENT WITH WATER-SOAKED BURLAP SO STEEL TEMPERATURE WILL NOT EXCEED AMBIENT AIR TEMPERATURE IMMEDIATELY BEFORE EMBEDDING IN CONCRETE. FOG-SPRAY FORMS, STEEL REINFORCEMENT, AND SUBGRADE JUST BEFORE PLACING CONCRETE. KEEP SUBGRADE MOISTURE UNIFORM WITHOUT STANDING WATER, SOFT SPOTS, OR DRY AREAS.3.0 FINISHING. COMPLY WITH RECOMMENDATIONS IN ACI 305.5 FOR SCREEDING, RE-STRAIGHTENING, AND FINISHING OF CONCRETE SURFACES. DO NOT WET CONCRETE SURFACES FOR FINISHING. ALL INTERIOR SURFACES EXPOSED TO WASTEWATER SHALL BE PREPARED IN ACCORDANCE WITH SPECIFICATION 03710 EPOXY LINER.

3.0 INTERIOR SURFACES. PREPARE ALL INTERIOR SURFACES OF STRUCTURES IN ACCORDANCE WITH THE REQUIREMENTS OF SPECIFICATION 03710 EPOXY LINER CONCRETE SURFACES OF STRUCTURE. ALL CONCRETE SURFACES EXPOSED TO WASTEWATER SHALL BE PROTECTED IN ACCORDANCE WITH SPECIFICATION 03710.

3.1 EXTERIOR WALLS. USE QUALIFIED FLATWORK FINISHERS ACCEPTABLE TO ENGINEER. UNLESS OTHERWISE PERMITTED, A MINIMUM OF ONE FINISHER OR FINISHING SUPERVISOR SHALL BE A CERTIFIED ACI FLATWORK CONCRETE FINISHER/TECHNICIAN OR A CERTIFIED ACI FLATWORK TECHNICIAN OR EQUIVALENT.

3.2 FLAT WALKING SURFACES. BROOM FINISH. UNLESS OTHERWISE SPECIFIED IN DRAWINGS, BROOM FINISH ALL CONCRETE WALKING SURFACES AFTER THE CONCRETE IS FLOATED. GIVE THE SURFACE A COARSE TRANSVERSE SCORED TEXTURE BY DRAWING A BROOM OR BURLAP BELT ACROSS THE SURFACE. TOLERANCES FOR CONCRETE FLOORS SHALL BE A MODERATELY FLAT SURFACE IN ACCORDANCE WITH ACI 117.

3.3 MEASURING TOLERANCES.

3.3.1 SLABS. COMPLY WITH ACI 117 WITHIN 72 HOURS AFTER SLAB FINISHING AND BEFORE REMOVING SUPPORTING FORMWORK OR SHORING. UNLESS OTHERWISE SPECIFIED, FOR FLOOR INSTALLATIONS 10,000 SF OR LESS IN TOTAL PROJECT AREA, MEASURE FLOOR FINISH TOLERANCES IN ACCORDANCE WITH THE 10-FOOT STRAIGHTEDGE METHOD IN ACI 117. UNLESS OTHERWISE SPECIFIED, FOR FLOOR INSTALLATIONS EXCEEDING 10,000 SF IN TOTAL PROJECT AREA, MEASURE FLOOR FINISH TOLERANCES IN ACCORDANCE WITH ASTM E1155 AND THE F-NUMBER SYSTEM IN ACI 117.

3.3.2 WALLS. TRUE AND PLUMB TO THE MEASUREMENTS SHOWN IN PLAN.

3.3.3 PIPE PENETRATIONS. COMPLETELY FILL TO FULL PENETRATION ANY VOIDS AROUND PIPE PENETRATIONS USING A HIGH-MODULUS, HIGHH-STRENGTH, STRUCTURAL, EPOXY MORTAR. USE SIKADUR 31, HI-MOD GEL WITH A 1:1 MIX RATIO OF SIKADUR 31 HI-MOD GEL TO OVEN DRIED SILICA SAND. PRE-MIX EACH COMPONENT OF SIKADUR 31 HIGH-MOD GEL. PROPORTION 1 PART COMPONENT 'B' TO 1 PART COMPONENT 'A' BY VOLUME INTO A CLEAN PAIL OR APPROPRIATELY SIZED MIXING CONTAINER. MIX THOROUGHLY FOR 3 MINUTES WITH A PADDLE ON LOW-SPEED 400-600 RPM) DRILL UNTIL UNIFORM IN COLOR. MIX ONLY THAT QUANTITY WHICH CAN BE USED WITHIN A POT LIFE. PRIOR TO MIXING, MATERIAL SHOULD BE CONDITIONED TO 65°-85°F (18°-29°C). TO PREPARE THE EPOXY MORTAR, SLOWLY ADD UP TO 1 PART, BY LOOSE VOLUME OF AN OVEN DRIED SILICA SAND, TO 1 PART OF THE MIXED SIKADUR 31, HI-MOD GEL, AND MIX UNTIL UNIFORM IN CONSISTENCY. APPLY TO VOIDS WITH A TROWEL FINISH. MAINTAIN REQUIRED ROUGHNESS ON INTERIOR WALLS FOR APPLICATION OF 2-PART EPOXY COATING IN ACCORDANCE WITH SPECIFICATION 03710. SUBMIT PROPOSED ALTERNATES TO SIKADUR 31, HI-MOD GEL TO ENGINEER FOR APPROVAL.

4.0 DO NOT USE WATER-REDUCING AND RETARDING ADMIXTURE WHEN REQUIRED BY HIGH TEMPERATURES, LOW HUMIDITY, OR OTHER ADVERSE PLACEMENT CONDITIONS.

5.0 SLUMP. UNLESS OTHERWISE SPECIFIED OR PERMITTED, CONCRETE SHALL HAVE, AT THE POINT OF DELIVERY, MINIMUM SLUMP OF 3", AND A MAXIMUM SLUMP OF 3-1/2 IN. DETERMINE THE SLUMP BY ASTM C143/C143M. SLUMP TOLERANCES SHALL MEET THE REQUIREMENTS OF ACI 117. WHEN USE OF A TYPE I OR II PLASTICIZING ADMIXTURE CONFORMING TO ASTM C1017 OR WHEN A TYPE F OR G HIGH-RANGE WATER-REDUCING ADMIXTURE CONFORMING TO ASTM C494/C494M IS PERMITTED TO INCREASE THE SLUMP OF CONCRETE, CONCRETE SHALL HAVE BEEN PROPORTIONED TO A SLUMP OF 2 TO 3 IN. BEFORE THE ADMIXTURE IS ADDED AND A MAXIMUM SLUMP OF 8 IN. AT THE POINT OF DELIVERY AFTER THE ADMIXTURE IS ADDED, UNLESS OTHERWISE SPECIFIED.

6.0 SIZE OF COARSE AGGREGATE. EXCEPT WHEN OTHERWISE SPECIFIED OR PERMITTED, NOMINAL MAXIMUM SIZE OF COARSE AGGREGATE SHALL NOT EXCEED THE LESSOR OF ¾" NOMINAL SIZE OR THREE-FOURTHS OF THE MINIMUM CLEAR SPACING BETWEEN REINFORCING BARS, ONE-FIFTH OF THE NARROWEST DIMENSION BETWEEN SIDES OF FORMS, AND ONE-THIRD OF THE THICKNESS OF SLABS OR TOPPINGS.

7.0 AIR CONTENT. ADD AIR-ENTRAINING ADMIXTURE AT MANUFACTURER'S PRESCRIBED RATE TO RESULT IN CONCRETE AT POINT OF PLACEMENT HAVING AN AIR CONTENT OF 3 PERCENT, UNLESS OTHERWISE INDICATED. DO NOT AIR ENTRAIN CONCRETE TO TROWEL-FINISHED INTERIOR SLABS ON GRADES, FOOTINGS, AND SUSPENDED STRUCTURAL SLABS. UNLESS OTHERWISE SPECIFIED, AIR-ENTRAIN EXPOSED CONCRETE SLABS ON GRADE, FOUNDATION WALLS, STAIRS, PIERS, AND ABUTMENTS AS INDICATED IN PLANS. DO NOT ALLOW ENTRAPPED AIR CONTENT TO EXCEED 3 PERCENT. MEASURE AIR CONTENT IN ACCORDANCE WITH ASTM C231 OR C173.

8.0 ADMIXTURES. SUBMIT ADMIXTURES FOR WORKABILITY AND SHRINKAGE TO ENGINEER FOR REVIEW AND APPROVAL. USE OF ADMIXTURES CONTAINING CHLORIDE IONS SHALL BE SUBJECT TO THE LIMITATIONS IN 5.2.2.6 OF ACI ACI 350.5. ADMIXTURES SHALL BE CERTIFIED BY MANUFACTURER TO CONTAIN NOT MORE THAN 0.1 PERCENT WATER-SOLUBLE CHLORIDE IONS BY MASS OF CEMENTITIOUS MATERIAL AND TO BE COMPATIBLE WITH OTHER ADMIXTURES AND CEMENTITIOUS MATERIALS.

8.1 AIR-ENTRAINING ADMIXTURE. ASTM C 260.

8.2 WATER-REDUCING ADMIXTURE. ASTM C 494, TYPE A.

8.3 HIGH-RANGE, WATER-REDUCING ADMIXTURE. ASTM C 494, TYPE F.

8.4 WATER-REDUCING AND ACCELERATING ADMIXTURE. ASTM C 494, TYPE E.

STANDARD STRUCTURAL NOTES (CONTINUED)

8.5 WATER-REDUCING AND RETARDING ADMIXTURE. ASTM C 494, TYPE D.

9.0 CHLORIDE-ION CONCENTRATION. UNLESS OTHERWISE SPECIFIED, MAXIMUM WATER-SOLUBLE CHLORIDE-ION CONCENTRATIONS IN HARDENED CONCRETE AT AGES FROM 28 TO 42 DAYS CONTRIBUTED FROM THE INGREDIENTS INCLUDING WATER, AGGREGATES, CEMENTITIOUS MATERIALS, AND ADMIXTURES SHALL NOT EXCEED THE LIMITS OF TABLE 5.2.2.6 OF ACI ACI 350.5. WHEN TESTING IS PERFORMED TO DETERMINE WATER-SOLUBLE CHLORIDE-ION CONTENT, TEST PROCEDURES SHALL CONFORM TO ASTM C1218/C1218M. THE TYPE OF MEMBER DESCRIBED IN TABLE 5.2.2.6 OF ACI ACI 350.5SHALL APPLY TO THE WORK AS INDICATED IN CONTRACT DOCUMENTS.

10.0 PROPORTIONING. PROPORTION CONCRETE TO PROVIDE WORKABILITY AND CONSISTENCY SO CONCRETE CAN BE WORKED READILY INTO FORMS AND AROUND REINFORCEMENT WITHOUT SEGREGATION OR BLEEDING, WALKING OF CONCRETE WITH USE OF VIBRATION, AND TO PROVIDE AN AVERAGE COMPRESSIVE STRENGTH. IF THE PRODUCTION FACILITY HAS RECORDS OF FIELD TESTS PERFORMED WITHIN THE PAST 12 MONTHS AND SPANNING A PERIOD OF NOT LESS THAN 60 DAYS FOR A CLASS OF CONCRETE WITHIN 1,000 PSI OF THAT SPECIFIED FOR THE WORK, CALCULATE A STANDARD DEVIATION AND ESTABLISH THE REQUIRED AVERAGE STRENGTH FCR' IN ACCORDANCE WITH ACI 350-06. IF FIELD TEST RECORDS ARE NOT AVAILABLE, SELECT THE REQUIRED AVERAGE STRENGTH FROM TABLE 5.2.3.3.1(B) OF ACI 350.5. UNLESS OTHERWISE SPECIFIED IN PLANS, PROPORTION NORMAL-WEIGHT CONCRETE MIX AS FOLLOWS:

10.1 MAXIMUM SLUMP: 3-1/2 INCHES.

10.2 MAXIMUM SLUMP FOR CONCRETE CONTAINING MID-RANGE PLASTICIZER: 6 INCHES.

10.3 HIGH-RANGE PLASTICIZERS ARE NOT PERMISSIBLE.

10.4 MAXIMUM SHRINKAGE: 0.03%.

10.5 WATER: POTABLE.

11.0 UNLESS OTHERWISE SPECIFIED IN PLANS, BASE STRENGTH REQUIREMENTS ON A 28-DAY COMPRESSIVE STRENGTH DETERMINED ON 6 X 12 IN. CYLINDRICAL SPECIMENS MADE AND TESTED IN ACCORDANCE WITH ASTM C31/C31M AND C39/C39M ARE AS : 4,000 PSI FOOTINGS; 5,000 PSI FOUNDATION WALLS; 5,000 PSI STRUCTURAL SLABS; AND 5,000 PSI RETAINING WALLS.

12.0 WATER STOPS. UNLESS SHOWN OTHERWISE, WATER STOPS ARE REQUIRED IN ALL CONTROL AND CONSTRUCTION JOINTS. SUPPLY AND INSTALL EARTH SHIELD THERMOPLASTIC CHEMICALLY RESISTANT WATER STOPS AS INDICATED IN PLANS. PROPOSED ALTERNATES SHALL COMPLY WITH NSF CERTIFIED, EPA COMPLIANT RCRA, SPCC, CFR 265.193 AND CFR 112. INSTALL MODEL IN ACCORDANCE WITH PLANS MANUFACTURER RECOMMENDATIONS AND INSTALLATION GUIDELINES. SUBMIT PROPOSED ALTERNATES TO ENGINEER FOR REVIEW AND APPROVAL.

13.0 LOADING AND SUPPORT OF CONCRETE. DO NOT ALLOW CONSTRUCTION LOADS TO EXCEED THE SUPERIMPOSED LOAD THAT THE STRUCTURAL MEMBER, WITH NECESSARY SUPPLEMENTAL SUPPORT, IS CAPABLE OF CARRYING SAFELY AND WITHOUT DAMAGE. GANGS OF FORMWORK MAY NOT BE PLACED ON CONCRETE SLABS DURING FORMING OF FOUNDATION WALLS, PIERS, AND OTHER STRUCTURES. CURE ALL CONCRETE STRUCTURES A MINIMUM OF (28) DAY COMPRESSIVE STRENGTH PRIOR TO PLACEMENT OF SERVICE LOADS.

14.0 PROTECTION FROM MECHANICAL INJURY. DURING THE CURING PERIOD, PROTECT CONCRETE FROM DAMAGING MECHANICAL DISTURBANCES INCLUDING LOAD STRESSES, SHOCK, AND VIBRATION. PROTECT CONCRETE SURFACES FROM DAMAGE BY CONSTRUCTION TRAFFIC, EQUIPMENT, MATERIALS, RAIN OR RUNNING WATER, AND OTHER ADVERSE WEATHER CONDITIONS.

15.0 ACCEPTANCE. CONCRETE WORKMANSHIP AND MATERIALS SHALL SUBSTANTIALLY CONFORM TO THESE SPECIFICATIONS, PLANS, AND OTHER CONTRACT DOCUMENTS. CONCRETE WORKMANSHIP AND MATERIALS THAT DO NOT SUBSTANTIALLY CONFORM MAY BE REPAIRED OR REJECTED. ENGINEER SHALL DETERMINE WHETHER CONCRETE WORKMANSHIP AND MATERIALS SUBSTANTIALLY CONFORM TO THESE SPECIFICATIONS, PLANS, AND OTHER CONTRACT DOCUMENTS. CONTRACTOR SHALL PROPOSE REPAIR OR RECONSTRUCTION OF SUCH WORKMANSHIP AND MATERIALS. REFERENCE SPECIFICATION 0330 FOR ACCEPTABLE REMEDIES TO POTENTIAL STRENGTH DEFICIENCIES.

16.0 QUALITY ASSURANCE. QUALITY CONTROL TESTING AND QUALITY ASSURANCE INSPECTIONS ARE REQUIRED. CONTRACTOR SHALL COORDINATE WITH ENGINEER FOR INSPECTION OF SUBGRADE PREPARATION, WATER PROOFING MEMBRANE, REINFORCING STEEL, FORMWORK, CONCRETE PLACEMENT, AND PREPARATION OF SURFACES FOR EPOXY LINER.

16.1 INSTALLER QUALIFICATIONS. CONTRACTOR SHALL ENGAGE AN EXPERIENCED INSTALLER WHO HAS COMPLETED CONCRETE WORK SIMILAR IN MATERIAL, DESIGN, AND EXTENT TO THAT OF THE PLANS AND WHOSE WORK HAS RESULTED IN CONSTRUCTION WITH A RECORD OF SUCCESSFUL IN-SERVICE PERFORMANCE.

16.2 MANUFACTURER QUALIFICATIONS. EXPERIENCED IN MANUFACTURING READY-MIXED CONCRETE PRODUCTS COMPLYING WITH ASTM C 94 REQUIREMENTS FOR PRODUCTION FACILITIES AND EQUIPMENT. MANUFACTURER MUST BE CERTIFIED ACCORDING TO THE NATIONAL READY MIXED CONCRETE ASSOCIATION'S CERTIFICATION OF READY MIXED CONCRETE PRODUCTION FACILITIES.

16.3 TESTING AGENCY QUALIFICATIONS. CONTRACTOR SHALL ENGAGE AN INDEPENDENT TESTING AGENCY, ACCEPTABLE TO AUTHORITIES HAVING JURISDICTION, QUALIFIED ACCORDING TO ASTM C 1077 AND ASTM E 329 TO CONDUCT THE TESTING INDICATED, AS DOCUMENTED ACCORDING TO ASTM E 548.

17.0 PLACEMENT OF EMBEDDED ITEMS. PLACE AND SECURE ANCHORAGE DEVICES AND OTHER EMBEDDED ITEMS REQUIRED FOR ADJOINING WORK THAT IS ATTACHED TO OR SUPPORTED BY CAST-IN-PLACE CONCRETE. USE SETTING DRAWINGS, TEMPLATES, DIAGRAMS, INSTRUCTIONS, AND DIRECTIONS FURNISHED WITH ITEMS TO BE EMBEDDED. INSTALL ANCHOR BOLTS, ACCURATELY LOCATED, TO ELEVATIONS REQUIRED. INSTALL REGLETS TO RECEIVE TOP EDGE OF FOUNDATION SHEET WATERPROOFING AND TO RECEIVE THROUGH-WALL FLASHINGS IN OUTER FACE OF CONCRETE FRAME AT EXTERIOR WALLS, WHERE FLASHING IS SHOWN AT LINTELS, SHELF ANGLES, AND OTHER CONDITIONS. INSTALL DOVETAIL ANCHOR SLOTS IN CONCRETE STRUCTURES AS INDICATED.19.0 PLACEMENT OF REINFORCING STEEL. COMPLY WITH CRSI'S "MANUAL OF STANDARD PRACTICE" FOR PLACING REINFORCEMENT. DO NOT CUT OR PUNCTURE VAPOR BARRIERS AND WATER PROOFING MEMBRANES. REPAIR DAMAGES AND RESEAL VAPOR AND WATERPROOFING BARRIERS BEFORE PLACING CONCRETE. RESEAL WATERPROOFING BARRIERS IN ACCORDANCE WITH MANUFACTURER'S REQUIREMENTS. CLEAN UNCOATED REINFORCEMENT OF LOOSE RUST AND MILL SCALE, EARTH, ICE, AND OTHER FOREIGN MATERIALS. ACCURATELY POSITION, SUPPORT, AND SECURE REINFORCEMENT AGAINST DISPLACEMENT. LOCATE AND SUPPORT REINFORCEMENT WITH BAR SUPPORTS TO MAINTAIN MINIMUM CONCRETE COVER. DO NOT TACK WELD CROSSING REINFORCING BARS. SHOP OR FIELD WELD REINFORCEMENT ACCORDING TO AWS D1.4. SET WIRE TIES WITH ENDS DIRECTED INTO CONCRETE, NOT TOWARD EXPOSED CONCRETE SURFACES. INSTALL WELDED WIRE FABRIC IN LONGEST PRACTICABLE LENGTHS ON BAR SUPPORTS SPACED TO MINIMIZE SAGGING. LAP EDGES AND ENDS OF ADJOINING SHEETS AT LEAST ONE MESH SPACING. OFFSET LAPS OF ADJOINING SHEET WIDTHS TO PREVENT CONTINUOUS LAPS IN EITHER DIRECTION. LACE OVERLAPS WITH WIRE.

18.0 CONSTRUCTION JOINTS. INSTALL SO STRENGTH AND APPEARANCE OF CONCRETE ARE NOT IMPAIRED, AT LOCATIONS INDICATED OR AS APPROVED BY ENGINEER. PLACE JOINTS PERPENDICULAR TO MAIN REINFORCEMENT. CONTINUE REINFORCEMENT ACROSS CONSTRUCTION JOINTS, UNLESS OTHERWISE INDICATED. FORM FROM PREFORMED GALVANIZED STEEL, PLASTIC KEYWAY-SECTION FORMS, OR BULKHEAD FORMS WITH KEYS, UNLESS OTHERWISE INDICATED. EMBED KEYS AT LEAST 1-1/2 INCHES INTO CONCRETE.

19.0 CONTROL JOINTS. FORM WEAKENED-PLANE CONTROL JOINTS FOR CONTRACTION, SECTIONING CONCRETE INTO AREAS AT A MINIMUM OF 10-FEET ON CENTER OR AS OTHERWISE INDICATED IN PLANS. CONTRACTOR MAY SAW CUT 1/8 INCH WIDE JOINTS INTO CONCRETE SLABS AND SHALL PROTECT AGAINST TEARS, ABRASIONS, OR OTHER DAMAGE TO SURFACES. CONTROL JOINTS MUST BE INSTALLED PRIOR TO POURING WALLS, AND SHALL BE SAW CUT INTO FLOOR 12-HOURS FOLLOWING THE SLAB POUR.

COMMONWEALTH OF VIRGINIA — BRODERICK C. ATTRA — Lic. No. 55325 — PROFESSIONAL ENGINEER — 11.16.16

Dominion — TRC

POWER GENERATION ENGINEERING
RICHMOND, VIRGINIA

GENERAL NOTES – CIVIL, MECHANICAL, STRUCTURAL

RETROFIT – SLUDGE SEDIMENTATION BASINS
CLOVER POWER STATION

REV	DESCRIPTION	DATE	DSGN	DRWN	CHKD	DSGN SUPV	PROJ ENGR
1	REVISED LINER SYSTEM	11 16 2016	CA	BZ	CA	NA	
0	BID SET	04 01 2016	CA	BZ	CA		

DSGN	CA	DSGN SUPV	DATE FEBRUARY 2016 DONSPEC FOR FILE VERIFICATION
DRWN	BZ	ENGR SUPV	DRAWING NO. 66706–15348–CWSG–S3102
CHKD	CA	PROJ ENGR	REV. 1
DISPL ENGR	XXX	SCALE: AS NOTED	UNLESS OTHERWISE NOTED — SH 3 OF 41

STANDARD LEGEND

EXISTING	PROPOSED	
		ROADWAYS
		GRAVEL
		PAVED
		RAILROAD
		CENTERLINE
		WALLS/FENCES
		FENCE LINE
		CONTOURS
1000	1000	INDEX CONTOUR AND TEXT (10' CONTOURS)
		INTERMEDIATE CONTOUR (2' CONTOURS)
		DEPRESSION
X 1055	X 1055	SPOT ELEVATION
		BREAKLINE
		TREES
		DECIDUOUS
		CONIFER
		TREE LINE AND/OR BUSH
		WATER
		STREAMS, BODIES OF WATER
		DITCH WITH FLOW AND DIRECTION
		BRIDGE
		CULVERT
		EXISTING WETLAND (DELINEATED IN 2011)
		BUILDING
		BUILDING
		FEATURES
MW1	MW1	MONITORING WELL
B-1	B-1	SOIL BORING
TP-3	TP-3	TEST PIT
MW-1A	MW-1A	PIEZOMETER
SG-1	SG-1	STAFF GAUGE
PW-1	PW-1	PRIVATE WELL
LH12	LH12	LEACHATE HEAD WELL
LHB	LHB	LEACHATE HEAD WELL MONITORING PORT
LS-57		LEAK DETECTION DEVICE AND NUMBER
		UTILITIES
UE	UE	UNDERGROUND ELECTRIC LINE
OE	OE	OVERHEAD ELECTRIC LINE
GAS	GAS	GAS
T	T	TELEPHONE
C	C	CABLE
SAN	SAN	SANITARY SEWER LINE
STS	STS	STORM SEWER LINE
		UNDERGROUND ELECTRICAL DUCT BANKS
W(4)	W(4)	UNDERGROUND WATER WASTEWATER PIPES, 4 PIPES GROUPED, (#) INDICATES NUMBER OF PIPES GROUPED TOGETHER
		LIGHT POLE
		POST WITH LIFE RING

STANDARD LEGEND

EXISTING	PROPOSED	
		PIPE
FM	FM	FORCEMAIN LINE
		COLLECTION PIPE (PERFORATED)
		COLLECTION PIPE (NON-PERFORATED)
		COLLECTION SUMP
P-1	P-1	PERIMETER ACCESS MANHOLE
T-1	T-1	TRANSFER MANHOLE
	C101	LEACHATE CLEANOUT
		GRADIENT CONTROL CLEANOUT
		SHUTOFF VALVE
		WATER VALVE
		HYDRANT
		SURFACE
EL.=1040.5	EL.=1040.5	SEDIMENTATION BASIN AND SURFACE WATER ELEVATION
		FINAL COVER DIVERSION BERM AND DITCH
		RIPRAP SPILLWAY
		PLAN SHEET
324,500 N		GRID TICK AND COORDINATE
172		SURVEY COORDINATE POINT LOCATION
3 S3117		DETAIL 3 ON SHEET 66706-15348-CWSG-S3117
2%		SLOPE PERCENT AND DIRECTION
		POTENTIAL SOIL STOCKPILE AREA
		MISCELLANEOUS
		LIMITS OF WASTE/FACILITY BOUNDARY
		LIMITS OF COMPOSITE LINER CONSTRUCTION
		LIMITS OF TOPSOIL REMOVAL
		LIMITS OF DISTURBANCE
		DRAINAGE LAYER DISCHARGE TRENCH AND DISCHARGE PIPE
		TEMPORARY DAM
		SURVEY DATA
		PROPERTY LINE
ROW	ROW	RIGHT-OF-WAY LINE
BM-1	BM-1	BENCH MARK
CP-1	CP-1	SURVEY CONTROL POINT
		MONUMENT

CONTROL POINT COORDINATES AND ELEVATIONS

POINT I.D. NO.	VIRGINIA STATE PLANE (NAD 83)		VIRGINIA STATE PLANE (NAD 27)		PLANT GRID		ELEVATION	DESCRIPTION
	NORTH	EAST	NORTH	EAST	NORTH	EAST		
1	3,476,607.36	11,423,847.90	195,717.93	1,940,849.56	11,334.3	20,660.5	372.31	T-BAR
2	3,476,279.77	11,424,156.48	195,390.35	1,941,158.14	11,190.0	21,086.8	372.86	T-BAR
3	3,476,368.57	11,424,159.08	195,479.14	1,941,160.74	11,269.6	21,047.4	373.90	CONCRETE PAD OF MONITORING WELL PW-4

NOTES

1. THE HORIZONTAL DATUM USED FOR THIS PLAN SET IS REFERENCED TO VIRGINIA STATE PLANE COORDINATE SYSTEM, SOUTH ZONE, NORTH AMERICAN DATUM (NAD 83), US SURVEY FEET.
2. THE VIRGINIA STATE PLANE COORDINATE SYSTEM (NAD 27) AND THE PLANT GRID SYSTEM COORDINATES PROVIDED FOR SURVEY CONTROL POINTS 1, 2 AND 3 ARE APPROXIMATE AND SHOULD NOT BE USED FOR CONSTRUCTION.

PLANT PIPING, FITTING, & VALVE LABELS

*00	SPOOL PIECE, FJ
*01	SPOOL PIECE, PO
*02	SPOOL PIECE, PE
*03	SPOOL PIECE, FJXPE
*04	SPOOL PIECE, FJXPO
*05	SPOOL PIECE, POXPE
*08	** PLUG, MJ
*09	** 11.25° BEND, MJ
*10	** 22.5° BEND, MJ
*11	** 45° BEND, MJ
*12	** 90° BEND, MJ
*13	** TEE, MJ
*14	** CROSS, MJ
*15	** 45° WYE, MJ
*16	** CONCENTRIC REDUCER, MJ
*17	** ECCENTRIC REDUCER, MJ
*18	** 11.25° BEND, MJXPE
*19	** 22.5° BEND, MJXPE
*20	** 45° BEND, MJXPE
*21	** 90° BEND, MJXPE
*22	** TEE, MJXPE
*23	** CROSS, MJXPE
*24	** 45° WYE, MJXPE
*25	** CONCENTRIC REDUCER, MJXPE
*26	** ECCENTRIC REDUCER, MJXPE
*27	** BLIND FLANGE
*28	** FLANGE COUPLING ADAPTER
*29	** 11.25° BEND, FJ
*30	** 22.5° BEND, FJ
*31	** 45° BEND, FJ
*32	** 90° BEND, FJ
*33	** TEE, FJ
*34	** CROSS, FJ
*35	** 45° WYE, FJ
*36	** CONCENTRIC REDUCER, FJ
*37	** ECCENTRIC REDUCER, FJ
*38	** COMPANION FLANGE, PO
*39	** 22.5° BEND, PO
*40	** 45° BEND, PO
*41	** 90° BEND, PO
*42	** TEE, PO
*43	** CAP, PO
*44	** 45° WYE, PO
*45	** CONCENTRIC REDUCER, PO
*46	** ECCENTRIC REDUCER, PO
*47	** 11.25° BEND, POXPE
*48	** 22.5° BEND, POXPE
*49	** 45° BEND, POXPE
*50	** 90° BEND, POXPE
*51	** TEE, POXPE
*52	** COMPANION FLANGE
*53	** 45° WYE, POXPE
*54	** CONCENTRIC REDUCER, POXPE
*55	** ECCENTRIC REDUCER, POXPE
*56	** SWING CHECK VALVE, FJ
*57	** TELESCOPIC VALVE, FJ
*58	** BALL VALVE, FJ
*59	** BUTTERFLY VALVE, WAFER STYLE, FJ
*60	** PLUG VALVE, FJ
*61	** MUD VALVE, FJ
*62	** PRESSURE RELIEF VALVE, FJ
*63	** RESILIENT WEDGE GATE VALVE, FJ
*64	** BUTTERFLY VALVE, WAFER STYLE, PO
*65	** PLUG VALVE, PO
*66	** BALL VALVE, PO
*67	** PRESSURE RELIEF VALVE, PO
*68	** RESILIENT WEDGE GATE VALVE, PO
*69	** PLUG VALVE, MJ
*70	** BUTTERFLY VALVE, MJ
*71	** RESILIENT WEDGE GATE VALVE, MJ
*72	** 45° BEND, PE
*73	** 90° BEND, PE
*74	** TEE, PE
*75	** CONCENTRIC REDUCER, PE
*76	** ECCENTRIC REDUCER, PE
*77	** 45° WYE, PE
*78	** 90° BEND, PEXFJ
*79	** TEE, PEXFJ
*80	** CROSS, PE
*81	** CROSS, PEXFJ
*82	** 22.5° BEND, PEXFJ

NOTES:

1. * PIPE SIZE (in)
2. FOR REDUCING TEES, CROSSES, OR BENDS, ADD THE SUFFIX "R"
3. THE LABEL "*08" REFERS TO EITHER PLUG OR CAP, WHICHEVER IS MOST APPROPRIATE. PROVIDE RESTRAINING GLAND.

EXAMPLE: 611 = 6" 45° BEND, MJ

EXAMPLE: 833R = 8" REDUCING TEE, FJ

COMMONWEALTH OF VIRGINIA
R. KENT NILSSON
Lic. No. 026477
11/16/16
PROFESSIONAL ENGINEER

Dominion
TRC

POWER GENERATION ENGINEERING
RICHMOND, VIRGINIA

CIVIL STANDARD LEGEND

RETROFIT – SLUDGE SEDIMENTATION BASINS
CLOVER, VIRGINIA

REV	DATE	DSGN	DRWN	CHKD	DSGN SUPV	PROJ ENGR	CIVIL ENGR	ELEC ENGR	MECH ENGR	ARCH	E.M. ENGR	I&C ENGR	REVISIONS
1	11 16 2016	DM	LLS	JNH		NA	RKN	CS	DS				REVISED LINER SYSTEM
0	04 08 2016	DM	LLS	JNH		NA	RKN	CS	DS				ISSUED FOR BID

DSGN D.MARSHALL	DSGN SUPV	DATE NOVEMBER 2016 DGNSPEC FOR FILE VERIFICATION	
DRWN L. STORMER	ENGR SUPV	DRAWING NO.	REV.
CHKD JH	PROJ ENGR	66706–15348–CWSG–S3103	1
DISPL ENGR ---	SCALE: AS NOTED	UNLESS OTHERWISE NOTED	SH 4 OF 41

DRAWING NAME: J:\Dominion Resources\Clover\230202 - Liner Construction - REV\000\04-230202-3410[1]-CS.dwg – PLOT DATE: November 15, 2016 – 10:34AM – LAYOUT: 66706-15348-CWSG-S3103

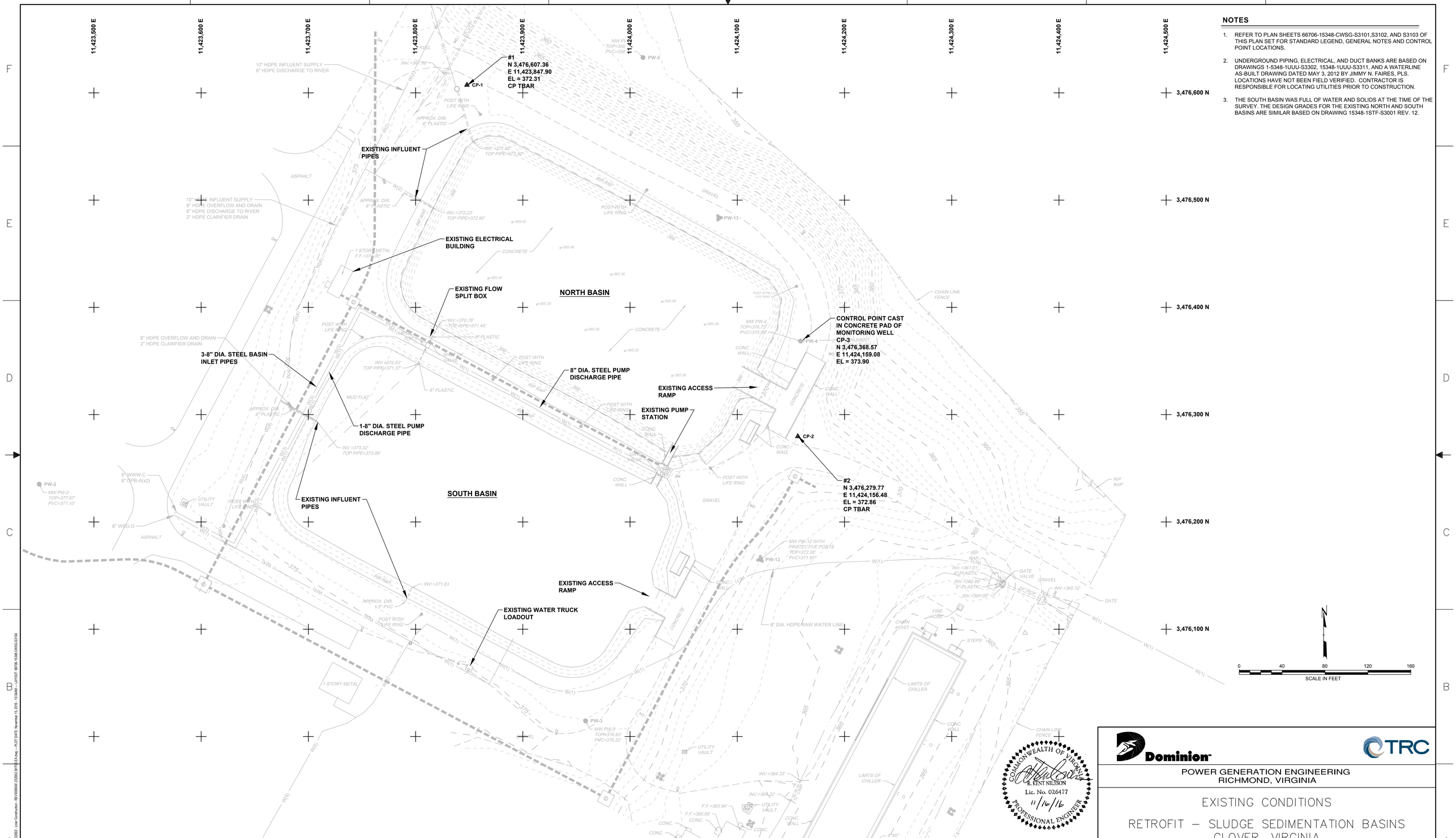

NOTES

1. REFER TO PLAN SHEETS 66706-15348-CWSG-S3101,S3102, AND S3103 OF THIS PLAN SET FOR STANDARD LEGEND, GENERAL NOTES AND CONTROL POINT LOCATIONS.
2. UNDERGROUND PIPING, ELECTRICAL, AND DUCT BANKS ARE BASED ON DRAWINGS 1-5348-1UUU-S3302, 15348-1UUU-S3311, AND A WATERLINE AS-BUILT DRAWING DATED MAY 3, 2012 BY JIMMY N. FAIRES, PLS. LOCATIONS HAVE NOT BEEN FIELD VERIFIED. CONTRACTOR IS RESPONSIBLE FOR LOCATING UTILITIES PRIOR TO CONSTRUCTION.
3. THE SOUTH BASIN WAS FULL OF WATER AND SOLIDS AT THE TIME OF THE SURVEY. THE DESIGN GRADES FOR THE EXISTING NORTH AND SOUTH BASINS ARE SIMILAR BASED ON DRAWING 15348-1STF-S3001 REV. 12.

COMMONWEALTH OF VIRGINIA
R. KENT NILSSON
Lic. No. 026477
11/16/16
PROFESSIONAL ENGINEER

Dominion
TRC

POWER GENERATION ENGINEERING
RICHMOND, VIRGINIA

EXISTING CONDITIONS

RETROFIT – SLUDGE SEDIMENTATION BASINS CLOVER, VIRGINIA

REV	DATE	DSGN	DRWN	CHKD	DSGN SUPV	PROJ ENGR	CIVIL ENGR	ELEC ENGR	MECH ENGR	ARCH	E.M. ENGR	I&C ENGR	REVISED LINER SYSTEM
1	11 16 2016	DM	LLS	JNH		NA	RKN	CS	DS				

REV	DATE	DSGN	DRWN	CHKD	DSGN SUPV	PROJ ENGR	CIVIL ENGR	ELEC ENGR	MECH ENGR	ARCH	E.M. ENGR	I&C ENGR	ISSUED FOR BID
0	04 08 2016	DM	LLS	JNH		NA	RKN	CS	DS				

DSGN D.MARSHALL	DSGN SUPV	DATE NOVEMBER 2016 DGNSPEC FOR FILE VERIFICATION	
DRWN L. STORMER	ENGR SUPV	DRAWING NO. 66706–15348–CWSG–S3104	REV. 1
CHKD JH	PROJ ENGR		
DISPL ENGR ---	SCALE: AS NOTED	UNLESS OTHERWISE NOTED	SH 5 OF 41

DRAWING NAME: J:\Dominion Resources\Clover\22002 - Liner Construction - RE\V00004-22002-S3104.dwg – PLOT DATE: November 15, 2016 - 10:34AM – LAYOUT: 66706-15348-CWSG-S3104

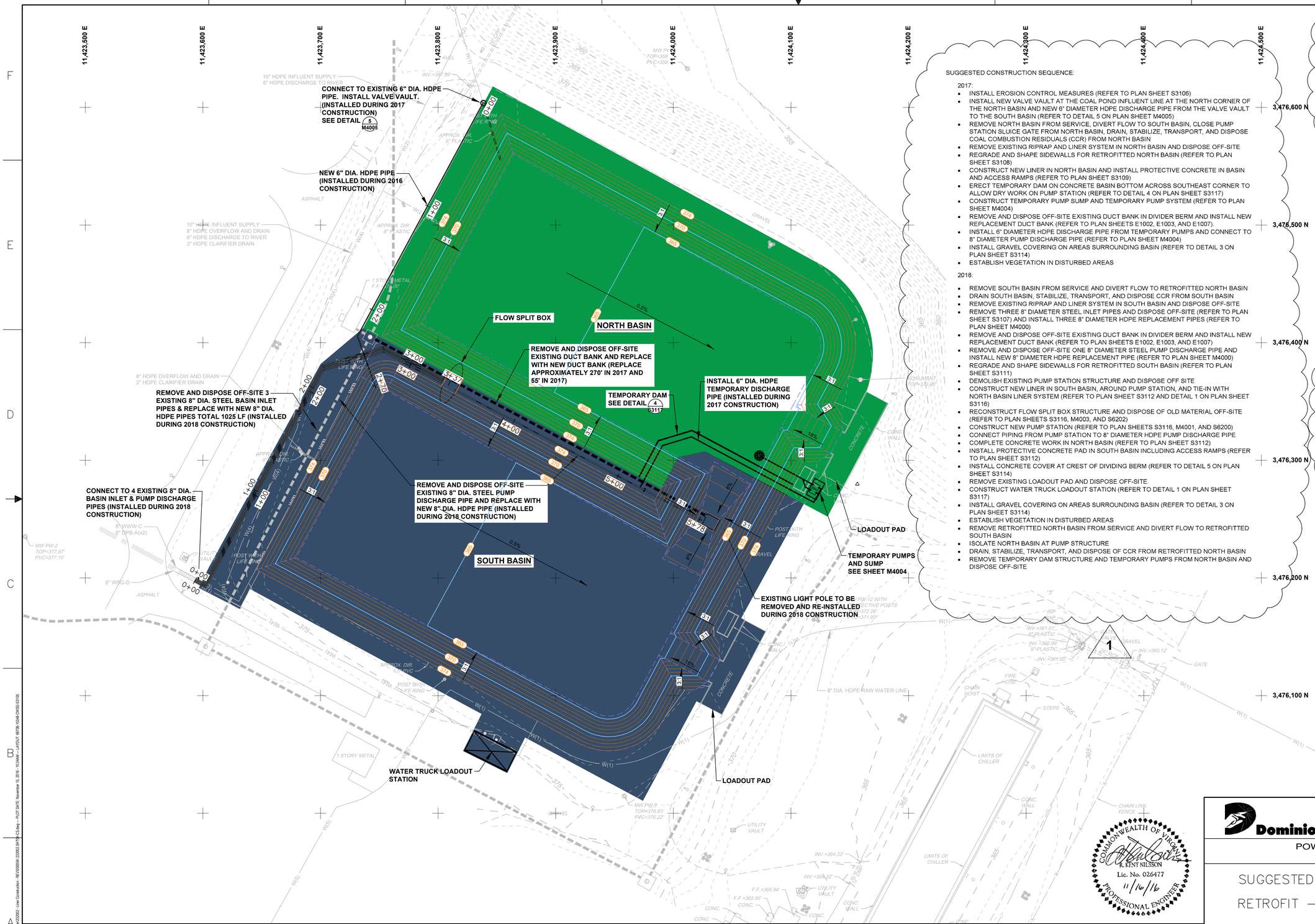

SUGGESTED CONSTRUCTION SEQUENCE:

2017:

- INSTALL EROSION CONTROL MEASURES (REFER TO PLAN SHEET S3106)
- INSTALL NEW VALVE VAULT AT THE COAL POND INFLUENT LINE AT THE NORTH CORNER OF THE NORTH BASIN AND NEW 6" DIAMETER HDPE DISCHARGE PIPE FROM THE VALVE VAULT TO THE SOUTH BASIN (REFER TO DETAIL 5 ON PLAN SHEET M4005)
- REMOVE NORTH BASIN FROM SERVICE, DIVERT FLOW TO SOUTH BASIN, CLOSE PUMP STATION SLUICE GATE FROM NORTH BASIN, DRAIN, STABILIZE, TRANSPORT, AND DISPOSE COAL COMBUSTION RESIDUALS (CCR) FROM NORTH BASIN
- REMOVE EXISTING RIPRAP AND LINER SYSTEM IN NORTH BASIN AND DISPOSE OFF-SITE
- REGRADE AND SHAPE SIDEWALLS FOR RETROFITTED NORTH BASIN (REFER TO PLAN SHEET S3108)
- CONSTRUCT NEW LINER IN NORTH BASIN AND INSTALL PROTECTIVE CONCRETE IN BASIN AND ACCESS RAMPS (REFER TO PLAN SHEET S3109)
- ERECT TEMPORARY DAM ON CONCRETE BASIN BOTTOM ACROSS SOUTHEAST CORNER TO ALLOW DRY WORK ON PUMP STATION (REFER TO DETAIL 4 ON PLAN SHEET S3117)
- CONSTRUCT TEMPORARY PUMP SUMP AND TEMPORARY PUMP SYSTEM (REFER TO PLAN SHEET M4004)
- REMOVE AND DISPOSE OFF-SITE EXISTING DUCT BANK IN DIVIDER BERM AND INSTALL NEW REPLACEMENT DUCT BANK (REFER TO PLAN SHEETS E1002, E1003, AND E1007).
- INSTALL 6" DIAMETER HDPE DISCHARGE PIPE FROM TEMPORARY PUMPS AND CONNECT TO 8" DIAMETER PUMP DISCHARGE PIPE (REFER TO PLAN SHEET M4004)
- INSTALL GRAVEL COVERING ON AREAS SURROUNDING BASIN (REFER TO DETAIL 3 ON PLAN SHEET S3114)
- ESTABLISH VEGETATION IN DISTURBED AREAS

2018:

- REMOVE SOUTH BASIN FROM SERVICE AND DIVERT FLOW TO RETROFITTED NORTH BASIN
- DRAIN SOUTH BASIN, STABILIZE, TRANSPORT, AND DISPOSE CCR FROM SOUTH BASIN
- REMOVE EXISTING RIPRAP AND LINER SYSTEM IN SOUTH BASIN AND DISPOSE OFF-SITE
- REMOVE THREE 8" DIAMETER STEEL INLET PIPES AND DISPOSE OFF-SITE (REFER TO PLAN SHEET S3107) AND INSTALL THREE 8" DIAMETER HDPE REPLACEMENT PIPES (REFER TO PLAN SHEET M4000)
- REMOVE AND DISPOSE OFF-SITE EXISTING DUCT BANK IN DIVIDER BERM AND INSTALL NEW REPLACEMENT DUCT BANK (REFER TO PLAN SHEETS E1002, E1003, AND E1007)
- REMOVE AND DISPOSE OFF-SITE ONE 8" DIAMETER STEEL PUMP DISCHARGE PIPE AND INSTALL NEW 8" DIAMETER HDPE REPLACEMENT PIPE (REFER TO PLAN SHEET M4000)
- REGRADE AND SHAPE SIDEWALLS FOR RETROFITTED SOUTH BASIN (REFER TO PLAN SHEET S3111)
- DEMOLISH EXISTING PUMP STATION STRUCTURE AND DISPOSE OFF SITE
- CONSTRUCT NEW LINER IN SOUTH BASIN, AROUND PUMP STATION, AND TIE-IN WITH NORTH BASIN LINER SYSTEM (REFER TO PLAN SHEET S3112 AND DETAIL 1 ON PLAN SHEET S3116)
- RECONSTRUCT FLOW SPLIT BOX STRUCTURE AND DISPOSE OF OLD MATERIAL OFF-SITE (REFER TO PLAN SHEETS S3116, M4003, AND S6202)
- CONSTRUCT NEW PUMP STATION (REFER TO PLAN SHEETS S3116, M4001, AND S6200)
- CONNECT PIPING FROM PUMP STATION TO 8" DIAMETER HDPE PUMP DISCHARGE PIPE
- COMPLETE CONCRETE WORK IN NORTH BASIN (REFER TO PLAN SHEET S3112)
- INSTALL PROTECTIVE CONCRETE PAD IN SOUTH BASIN INCLUDING ACCESS RAMPS (REFER TO PLAN SHEET S3112)
- INSTALL CONCRETE COVER AT CREST OF DIVIDING BERM (REFER TO DETAIL 5 ON PLAN SHEET S3114)
- REMOVE EXISTING LOADOUT PAD AND DISPOSE OFF-SITE.
- CONSTRUCT WATER TRUCK LOADOUT STATION (REFER TO DETAIL 1 ON PLAN SHEET S3117)
- INSTALL GRAVEL COVERING ON AREAS SURROUNDING BASIN (REFER TO DETAIL 3 ON PLAN SHEET S3114)
- ESTABLISH VEGETATION IN DISTURBED AREAS
- REMOVE RETROFITTED NORTH BASIN FROM SERVICE AND DIVERT FLOW TO RETROFITTED SOUTH BASIN
- ISOLATE NORTH BASIN AT PUMP STRUCTURE
- DRAIN, STABILIZE, TRANSPORT, AND DISPOSE OF CCR FROM RETROFITTED NORTH BASIN
- REMOVE TEMPORARY DAM STRUCTURE AND TEMPORARY PUMPS FROM NORTH BASIN AND DISPOSE OFF-SITE

LEGEND

- 2017 CONSTRUCTION
- 2018 CONSTRUCTION

NOTES

1. REFER TO PLAN SHEET S3103 OF THIS PLAN SET FOR STANDARD LEGEND AND CONTROL POINT LOCATIONS.

2. FULL TONE DESIGN GRADES REPRESENTS BASE GRADES FOR RETROFIT.

1

ESTIMATED CONSTRUCTION SCHEDULE

2017		2018	
1st Half	2nd Half	1st Half	2nd Half
North Basin Clean Closure 4/13/17 - 7/26/17	North Basin Lining 7/27/17 – 10/4/17	South Basin Clean Closure 3/31/18 - 7/13/18	South Basin Lining 7/14/18 - 9/21/18

1

SCALE IN FEET: 0, 40, 80, 120, 160

COMMONWEALTH OF VIRGINIA
R. KENT NILSSON
Lic. No. 026477
11/16/16
PROFESSIONAL ENGINEER

Dominion™ TRC

POWER GENERATION ENGINEERING
RICHMOND, VIRGINIA

SUGGESTED CONSTRUCTION SEQUENCE PLAN

RETROFIT – SLUDGE SEDIMENTATION BASINS
CLOVER, VIRGINIA

DSGN D.MARSHALL	DSGN SUPV	DATE NOVEMBER 2016 DGNSPEC FOR FILE VERIFICATION	
DRWN L. STORMER	ENGR SUPV	DRAWING NO. 66706-15348-CWSG-S3105	REV. 1
CHKD JH	PROJ ENGR		
DISPL ENGR ---	SCALE: AS NOTED	UNLESS OTHERWISE NOTED	SH 6 OF 41

REV	DATE	DSGN	DRWN	CHKD	DSGN SUPV	PROJ ENGR	CIVIL ENGR	ELEC ENGR	MECH ENGR	ARCH	E.M. ENGR	I&C ENGR
1	11 16 2016	DM	LLS	JNH		NA	RKN	CS	DS			
0	04 08 2016	DM	LLS	JNH		NA	RKN	CS	DS			

1 REVISED LINER SYSTEM

0 ISSUED FOR BID

DGN: \\DOMINION RESOURCES\CHAR\CS0002 - Line Construction - RE\V00004\ 22202\ 2016\ 66706-15348-CWSG.dwg – PLOT DATE: November 16, 2016 10:34AM – LAYOUT: 66706-15348-CWSG-S3105

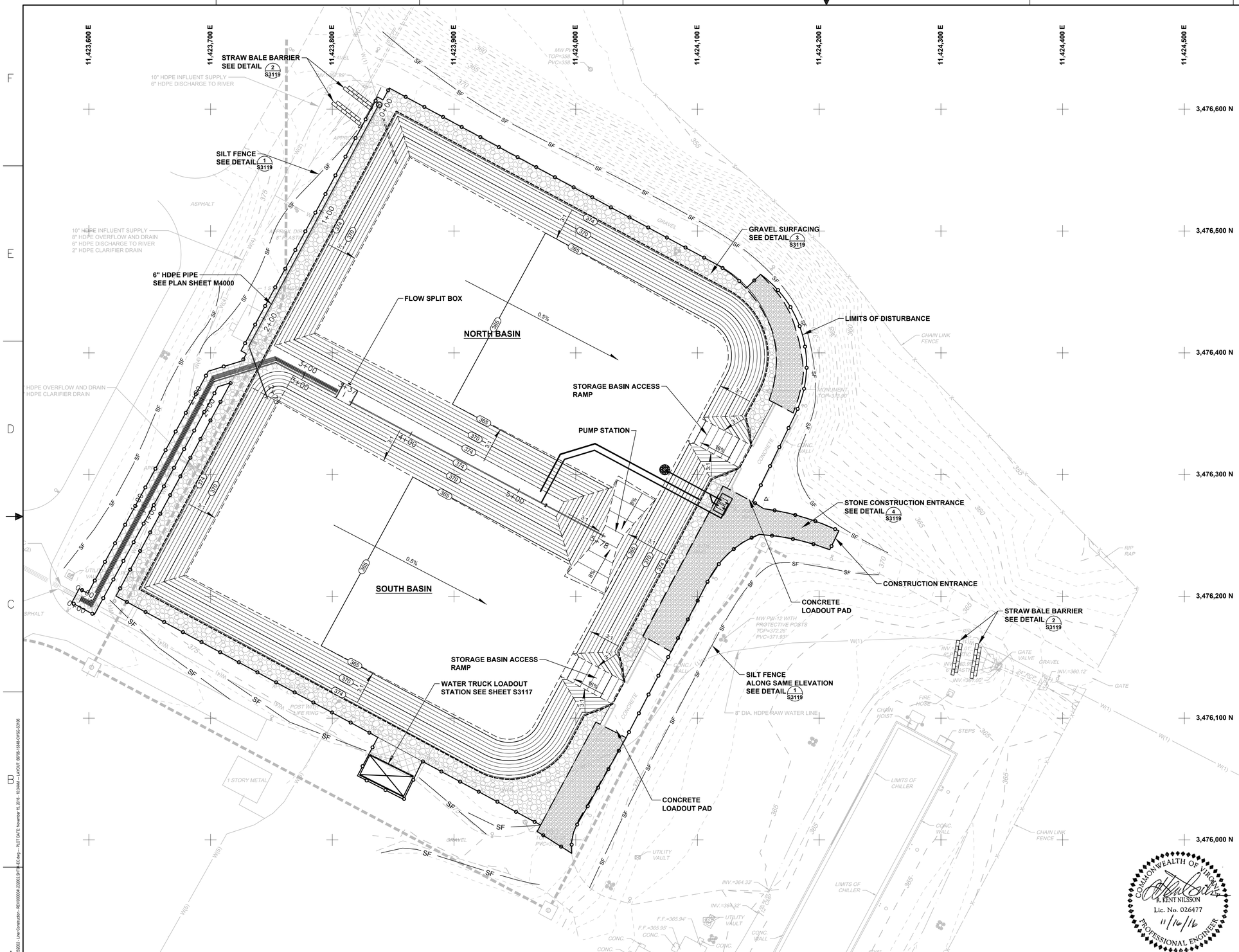

LEGEND

- GRAVEL SURFACING LOCATION
- STONE CONSTRUCTION ENTRANCE LOCATION
- PERMANENT SEEDING AREA
- SF — SILT FENCE LOCATION
- STRAW BALE BARRIER LOCATION
- DASHED LINES REPRESENT LOCATION OF INTERSECTING SLOPES
- LIMITS OF DISTURBANCE FOR AREA NOT FLOWING TO BASINS (0.9 ACRES)
- LIMITS OF DISTURBANCE FOR AREA FLOWING TO BASINS (3.8 ACRES)

NOTES

1. REFER TO PLAN SHEET S3103 OF THIS PLAN SET FOR STANDARD LEGEND AND CONTROL POINT LOCATIONS.
2. TOTAL AREA OF LAND DISTURBANCE OUTSIDE OF BASINS IS 0.9 ACRES.
3. FULL TONE DESIGN GRADES REPRESENT BASE GRADES (TOP OF CLAY) FOR RETROFIT.

Project Narrative:

The proposed construction includes clean closing both basins, removal of the existing liner system, and retrofitting the basins with a liner system meeting the requirements of the federal CCR Rule. In the process of the retrofit, the pump station to cycle water from the basins back to the Clover Power Station will be lined and reconstructed. A temporary pumping system will be provided during the reconstruction.

During September 2015 through November 2015, sludge was removed from the north and south basins in preparation for future construction. The two sludge sedimentation basins will be retrofitted during two reconstruction events.

In 2017, flow will be diverted to the south basin. The north basin will be closed by removing sludge and the existing liner system. Material will be removed based on visual confirmation. After closure, the north basin will be retrofitted by establishing subbase grades, constructing the liner system, and constructing the liner protection system (concrete cover). The southeast corner of the north basin surrounding the pump station will be constructed as much as feasible during 2017. A temporary dam and pump system will be constructed after the north basin liner and protective system to provide a dry working area to access the pump structure during 2018.

In 2018, flow will be diverted to the north basin. The south basin will be closed by removing sludge and the existing liner system to visual confirmation of removal. After closure, the existing pump station will be demolished. The south basin will be retrofitted by establishing subbase grades, constructing the liner system, and constructing the liner protection system (concrete cover). A new pump station will be constructed after installation of the new liner system. During 2018, the southeastern portion of the north basin will be lined and tied in to the 2017 construction. Reconstruction of the flow split box and influent lines will be coordinated with Dominion during 2018 to minimize impact to operations.

It is anticipated that flow will be diverted to the retrofitted south basin in 2018, to allow removal of the temporary dam and temporary pump system.

Structural Practices:

Stone Construction Entrance – 3.02: A stone pad will be installed at points of vehicular ingress and egress, to reduce the soil transported onto public roads and other paved areas.

Straw Bale Barrier – 3.04: Straw bale barriers will be installed to intercept and detain small amounts of sediment from disturbed areas of limited extent in order to prevent sediment from leaving the construction site.

Silt Fence – 3.05: Silt fences will be constructed along the perimeter of the project to intercept and detain run-off sediment from small areas not being diverted to sediment basins or other structural controls. To decrease flow velocities, silt fences will also be constructed along upstream areas of the site to inhibit erosion potential. Wire supported silt fence (super silt fence) in two layers will be used for perimeter runoff and for critical areas.

Soil Stabilization:

- Permanent or temporary soil stabilization shall be applied to denuded areas within seven (7) days after final grade is reached on any portion of the site.
- Temporary soil stabilization shall be applied within seven (7) days to denuded areas that may not be at final grade but will remain dormant for longer than fourteen (14) days.
- Permanent stabilization shall be applied to areas that are to be left dormant for more than one (1) year.
- Seeding and selection of the seed mixture shall be in accordance with the Virginia Erosion and Sediment Control Handbook Standard and Specification 3.32 – D (Piedmont Area).

Inspection Protocol:

- The contractor shall inspect all erosion and sediment control measures at least once every 2 weeks and within 48 hours following any runoff producing storm event. The following items will be checked in particular:
  - Silt fence barriers will be checked regularly for undermining or deterioration of the fabric, and immediately after each runoff producing rainfall event and at least daily during prolonged rainfall. Sediment shall be removed when the level of sediment deposition reaches half the height of the barrier.
  - Seeded areas will be checked regularly to ensure that a good stand of vegetation is maintained. Areas will be fertilized and reseeded as needed.
  - Straw bale barriers will be checked regularly for under-cutting, damaged bales, and end runs immediately after each runoff producing rain event and at least daily during prolonged rainfall. Sediment must be removed when the level of deposition reaches approximately one-half the height of the barrier.

N

0 40 80 120 160
SCALE IN FEET

COMMONWEALTH OF VIRGINIA
R. KENT NILSSON
Lic. No. 026477
11/16/16
PROFESSIONAL ENGINEER

Dominion

TRC

POWER GENERATION ENGINEERING
RICHMOND, VIRGINIA

EROSION AND SEDIMENT CONTROL PLAN

RETROFIT – SLUDGE SEDIMENTATION BASINS CLOVER, VIRGINIA

DSGN D.MARSHALL	DSGN SUPV	DATE NOVEMBER 2016 DGNSPEC FOR FILE VERIFICATION	
DRWN L. STORMER	ENGR SUPV	DRAWING NO. 66706–15348–CWSG–S3106	REV. 1
CHKD JH	PROJ ENGR		
DISPL ENGR ---	SCALE: AS NOTED	UNLESS OTHERWISE NOTED	SH 7 OF 41

REV	DATE	DSGN	DRWN	CHKD	DSGN SUPV	PROJ ENGR	CIVIL ENGR	ELEC ENGR	MECH ENGR	ARCH	E.M. ENGR	I&C ENGR
1	11 16 2016	DM	LLS	JNH		NA	RKN	CS	DS			
0	04 08 2016	DM	LLS	JNH		NA	RKN	CS	DS			

1 REVISED LINER SYSTEM

0 ISSUED FOR BID

DGN: \\DOMAIN\Dominion\Projects\66706\15348\CWSG\S3106.dgn – PLOT DATE: November 15, 2016 10:34AM – LAYOUT: 66706-15348-CWSG-S3106

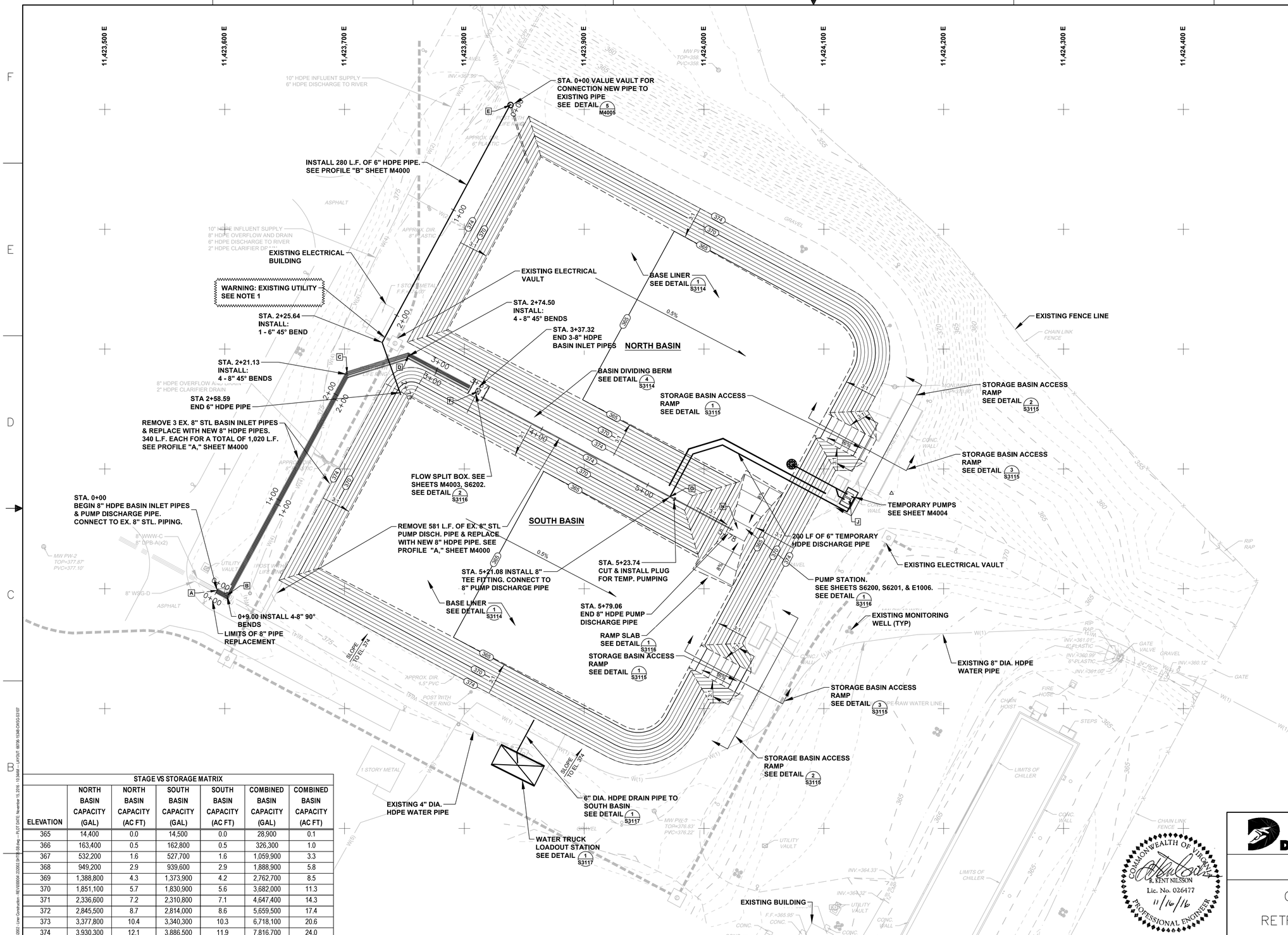

NOTES

1. REFER TO PLAN SHEET S3103 OF THIS PLAN SET FOR STANDARD LEGEND NOTES AND CONTROL POINT LOCATIONS.
2. GRADES SHOWN ARE BASE GRADES (TOP OF CLAY).

5+00 STATIONING FOR PIPE PROFILES SHOWN ON PLAN SHEET M4000.

ADDITIONAL NOTES

1. BURIED ELECTRICAL DUCT BANK IN DIVIDER BERM AND NORTHWEST OF BASINS. USE CAUTION DURING EXCAVATION.
2. EXACT LOCATION OF TEMPORARY PUMP SYSTEM TO BE CONFIRMED BY OWNER PRIOR TO CONSTRUCTION.
3. HDPE YARD PIPING SHALL BE CLASS DR-17 WITH WORKING PRESSURE RATING OF 125 PSI. PIPE AND FITTINGS SHALL MEET THE REQUIREMENTS OF AWWA C906 AND ASTM D2239. PIPE SIZE NOTED INDICATES THE INSIDE DIAMETER.
4. PROVIDE THRUST BLOCKING FOR ALL BURIED PIPE BENDS AS DESCRIBED IN DETAIL 9, SHEET M4006.

NAD83 CONSTRUCTION COORDINATES

TAG	OBJECT (CENTERLINE)	NORTHING	EASTING	REFERENCE SHEETS
A	8" PIPE STA. 0+00	3476198.60	11423593.69	M4000
B	8" PIPE STA. 0+09.00 (90° BEND)	3476194.31	11423601.60	M4000
C	8" PIPE STA. 2+21.13 (45° BEND)	3476379.43	11423702.06	M4000
D	8" PIPE STA. 2+74.49 (45° BEND)	3476395.29	11423753.51	M4000
E	6" HDPE VALVE VAULT	3476603.70	11423838.53	M4000, M4005
F	FLOW SPLIT BOX	3476364.65	11423811.46	M4003, S6202
G	TEMPORARY PIPE CONNECTION	3476276.79	11423971.63	M4004
H	PUMP STATION	3476249.01	11424029.00	M4001, M4002, S6200, S6201, E1005
J	TEMPORARY PUMP STATION	3476274.90	11424122.20	M4004

STAGE VS STORAGE MATRIX

ELEVATION	NORTH BASIN CAPACITY (GAL)	NORTH BASIN CAPACITY (AC FT)	SOUTH BASIN CAPACITY (GAL)	SOUTH BASIN CAPACITY (AC FT)	COMBINED BASIN CAPACITY (GAL)	COMBINED BASIN CAPACITY (AC FT)
365	14,400	0.0	14,500	0.0	28,900	0.1
366	163,400	0.5	162,800	0.5	326,300	1.0
367	532,200	1.6	527,700	1.6	1,059,900	3.3
368	949,200	2.9	939,600	2.9	1,888,900	5.8
369	1,388,800	4.3	1,373,900	4.2	2,762,700	8.5
370	1,851,100	5.7	1,830,900	5.6	3,682,000	11.3
371	2,336,600	7.2	2,310,800	7.1	4,647,400	14.3
372	2,845,500	8.7	2,814,000	8.6	5,659,500	17.4
373	3,377,800	10.4	3,340,300	10.3	6,718,100	20.6
374	3,930,300	12.1	3,886,500	11.9	7,816,700	24.0

COMMONWEALTH OF VIRGINIA
R. KENT NILSSON
Lic. No. 026477
11/16/16
PROFESSIONAL ENGINEER

Dominion
TRC

POWER GENERATION ENGINEERING
RICHMOND, VIRGINIA

OVERVIEW NORTH AND SOUTH BASINS
RETROFIT – SLUDGE SEDIMENTATION BASINS
CLOVER, VIRGINIA

REV	DATE	DSGN	DRWN	CHKD	DSGN SUPV	PROJ ENGR	CIVIL ENGR	ELEC ENGR	MECH ENGR	ARCH	E.M. ENGR	I&C ENGR
1	11 16 2016	DM	LLS	JNH		NA	RKN	CS	DS			
0	04 08 2016	DM	LLS	JNH		NA	RKN	CS	DS			

1 REVISED LINER SYSTEM
0 ISSUED FOR BID

DSGN D.MARSHALL	DSGN SUPV	DATE NOVEMBER 2016 DGNSPEC FOR FILE VERIFICATION	
DRWN L. STORMER	ENGR SUPV	DRAWING NO. 66706–15348–CWSG–S3107	REV. 1
CHKD JH	PROJ ENGR		
DISPL ENGR ---	SCALE: AS NOTED	UNLESS OTHERWISE NOTED	SH 8 OF 41

[DRAWING NAME - Dominion Resources\Clover\23002_Liner Construction - RD\V00\M4-23002-3107S3 - 8 dwg - PLOT DATE: November 15, 2016 - 10:34AM - LAYOUT: 8X11B-1X8B CWSG-S3107

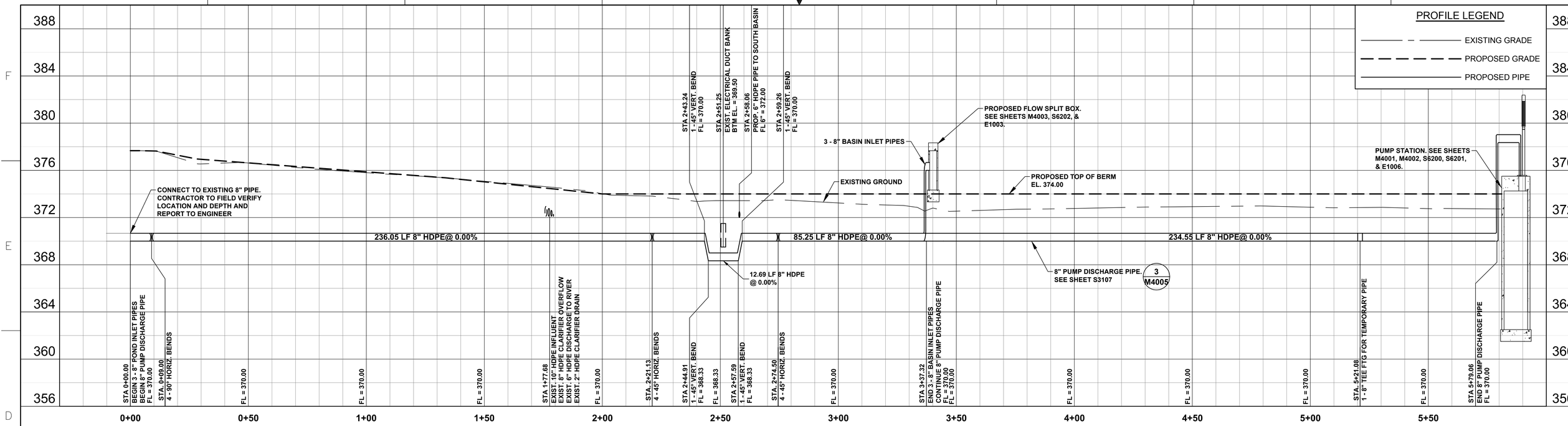

PROFILE "A"

8" HDPE POND INLET PIPES AND PUMP DISCHARGE PIPE

HORIZONTAL SCALE: 1" = 20'
VERTICAL SCALE: 1" = 4'

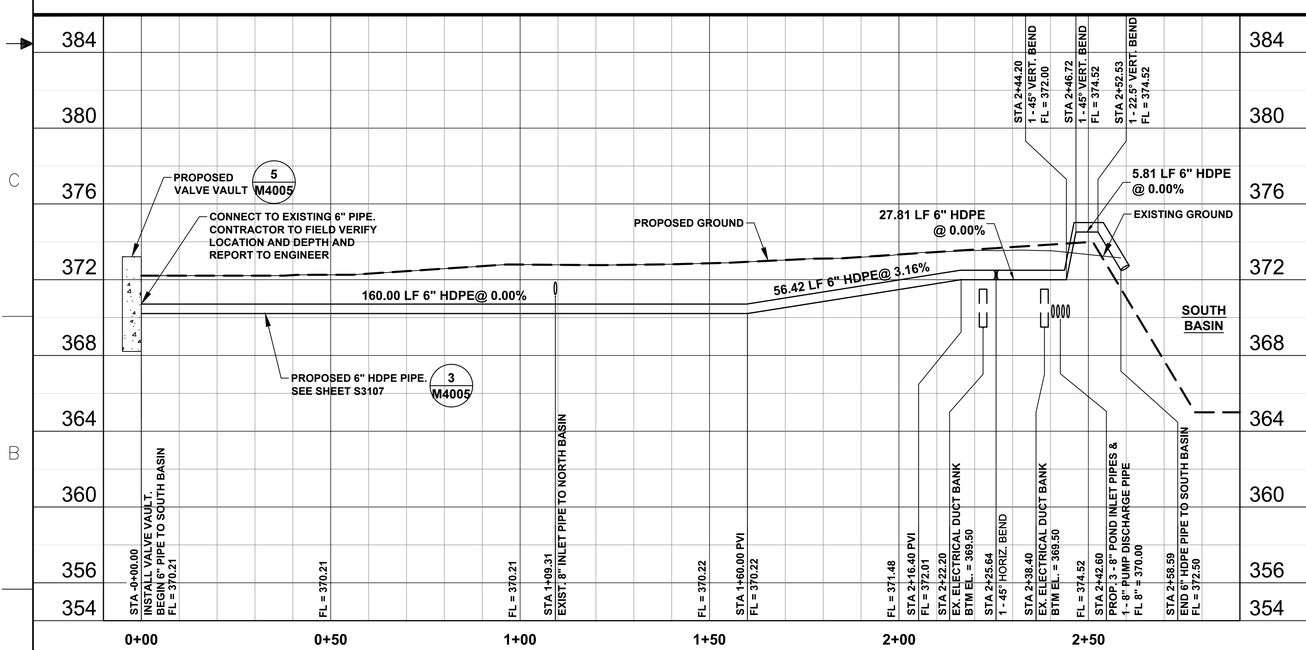

PROFILE "B"

6" HDPE COAL ASH PIPE TO SOUTH POND

HORIZONTAL SCALE: 1" = 20'
VERTICAL SCALE: 1" = 4'

NOTES:

1. HDPE YARD PIPING SHALL BE CLASS DR-17 WITH WORKING PRESSURE RATING OF 125 PSI. PIPE AND FITTINGS SHALL MEET THE REQUIREMENTS OF AWWA C906 AND ASTM D2239. PIPE SIZE NOTED INDICATES THE INSIDE DIAMETER.

COMMONWEALTH OF VIRGINIA
J. DAMON SAMS
Lic. No. 055523
11/16/16
PROFESSIONAL ENGINEER

Dominion
TRC

POWER GENERATION ENGINEERING
RICHMOND, VIRGINIA

YARD PIPING PROFILES

RETROFIT – SLUDGE SEDIMENTATION BASINS
CLOVER POWER STATION

REV	DATE	DESCRIPTION
1	11 04 2016	REVISED LINER SYSTEM
0	04 08 2016	ISSUED FOR BID

DSGN	DSAMS	DSGN SUPV	DATE APRIL 2016 DGNSPEC FOR FILE VERIFICATION
DRWN	DSAMS	ENGR SUPV	DRAWING NO. 66706-15348-CWSG-M4000
CHKD	CBELL	PROJ ENGR	REV. 1
DISPL ENGR	XXX	SCALE: AS NOTED	UNLESS OTHERWISE NOTED

SH 9 OF 41

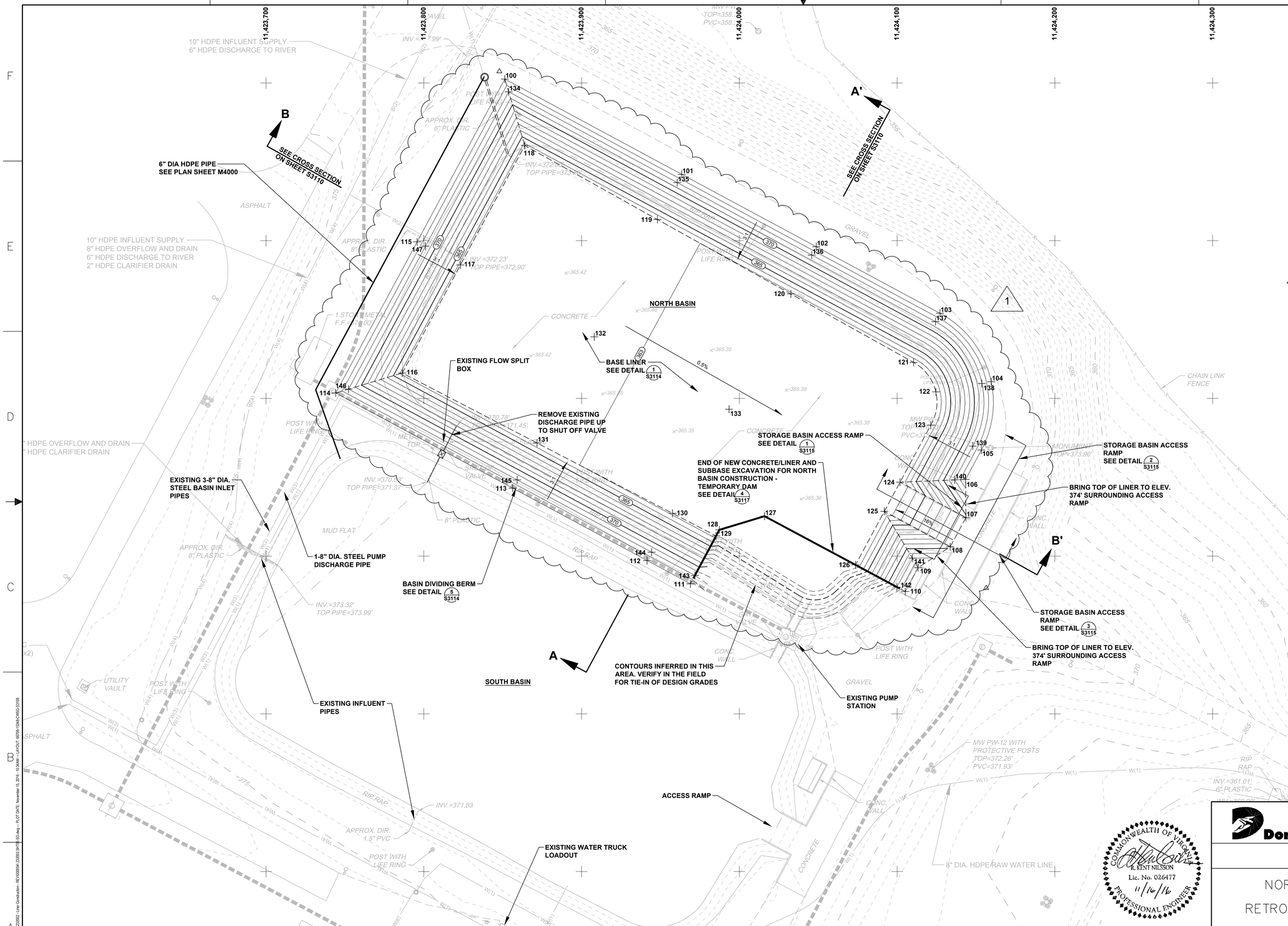

NOTES

1. REFER TO PLAN SHEET S3103 OF THIS PLAN SET FOR STANDARD LEGEND AND CONTROL POINT LOCATIONS.

POINT NO.	DESIGN LOCATION NORTH	DESIGN LOCATION EAST	SUBBASE GRADES DESIGN (ft)	BASE GRADES DESIGN (ft)
100	3476602.51	11423851.33	374.00	NA
101	3476542.06	11423963.46	374.00	NA
102	3476496.19	11424048.79	374.00	NA
103	3476453.99	11424127.17	374.00	NA
104	3476410.60	11424159.66	374.00	NA
105	3476367.26	11424153.43	374.00	NA
106	3476348.66	11424143.43	374.00	NA
107	3476324.41	11424143.62	369.67	371.67
108	3476305.92	11424133.66	369.67	371.67
109	3476292.73	11424113.31	374.00	NA
110	3476277.58	11424105.15	374.00	NA
111	3476282.46	11423968.98	374.00	NA
112	3476297.24	11423941.53	374.00	NA
113	3476343.10	11423856.35	374.00	NA
114	3476403.48	11423744.18	374.00	NA
115	3476499.33	11423795.78	374.00	NA
116	3476416.13	11423786.31	363.63	365.63
117	3476484.62	11423823.17	363.63	365.63
118	3476560.40	11423863.96	363.64	365.64
119	3476513.47	11423948.07	363.16	365.16
120	3476466.27	11424032.66	362.67	364.67
121	3476422.89	11424110.42	362.23	364.23
122	3476404.16	11424124.60	362.12	364.12
123	3476383.06	11424121.34	362.08	364.08
124	3476346.89	11424101.86	362.08	364.08
125	3476328.40	11424091.90	362.08	364.08
126	3476294.47	11424073.64	362.08	364.08
127	3476325.35	11424015.97	362.41	364.41
128	3476316.68	11423987.32	362.51	364.51
129	3476312.87	11423985.20	362.51	364.51
130	3476327.16	11423957.67	362.67	364.67
131	3476371.75	11423871.77	363.15	365.15
132	3476439.07	11423908.01	363.15	365.15
133	3476393.18	11423993.47	362.67	364.67
134	3476594.39	11423853.77	372.00	374.00
135	3476536.84	11423960.65	372.00	374.00
136	3476490.91	11424045.94	372.00	374.00
137	3476448.70	11424124.32	372.00	374.00
138	3476409.44	11424153.70	372.00	374.00
139	3476369.79	11424147.99	372.00	374.00
140	3476348.36	11424136.45	372.00	374.00
141	3476298.71	11424109.72	372.00	374.00
142	3476280.38	11424099.87	372.00	374.00
143	3476287.74	11423971.83	372.00	374.00
144	3476302.52	11423944.38	372.00	374.00
145	3476348.38	11423859.19	372.00	374.00
146	3476405.92	11423752.31	372.00	374.00
147	3476496.54	11423800.98	372.00	374.00

REV	DATE	DESCRIPTION
1	11 16 2016	REVISED LINER SYSTEM
0	04 08 2016	ISSUED FOR BID

Dominion

TRC

POWER GENERATION ENGINEERING
RICHMOND, VIRGINIA

NORTH BASIN LINER SUBBASE GRADES

RETROFIT – SLUDGE SEDIMENTATION BASINS
CLOVER, VIRGINIA

COMMONWEALTH OF VIRGINIA
R. KENT NILSSON
Lic. No. 026477
11/16/16
PROFESSIONAL ENGINEER

DSGN D.MARSHALL	DSGN SUPV	DATE NOVEMBER 2016 DGNSPEC FOR FILE VERIFICATION	
DRWN L. STORMER	ENGR SUPV	DRAWING NO. 66706–15348–CWSG–S3108	REV. 1
CHKD JH	PROJ ENGR		
DISPL ENGR ---	SCALE: AS NOTED	UNLESS OTHERWISE NOTED	SH 10 OF 41

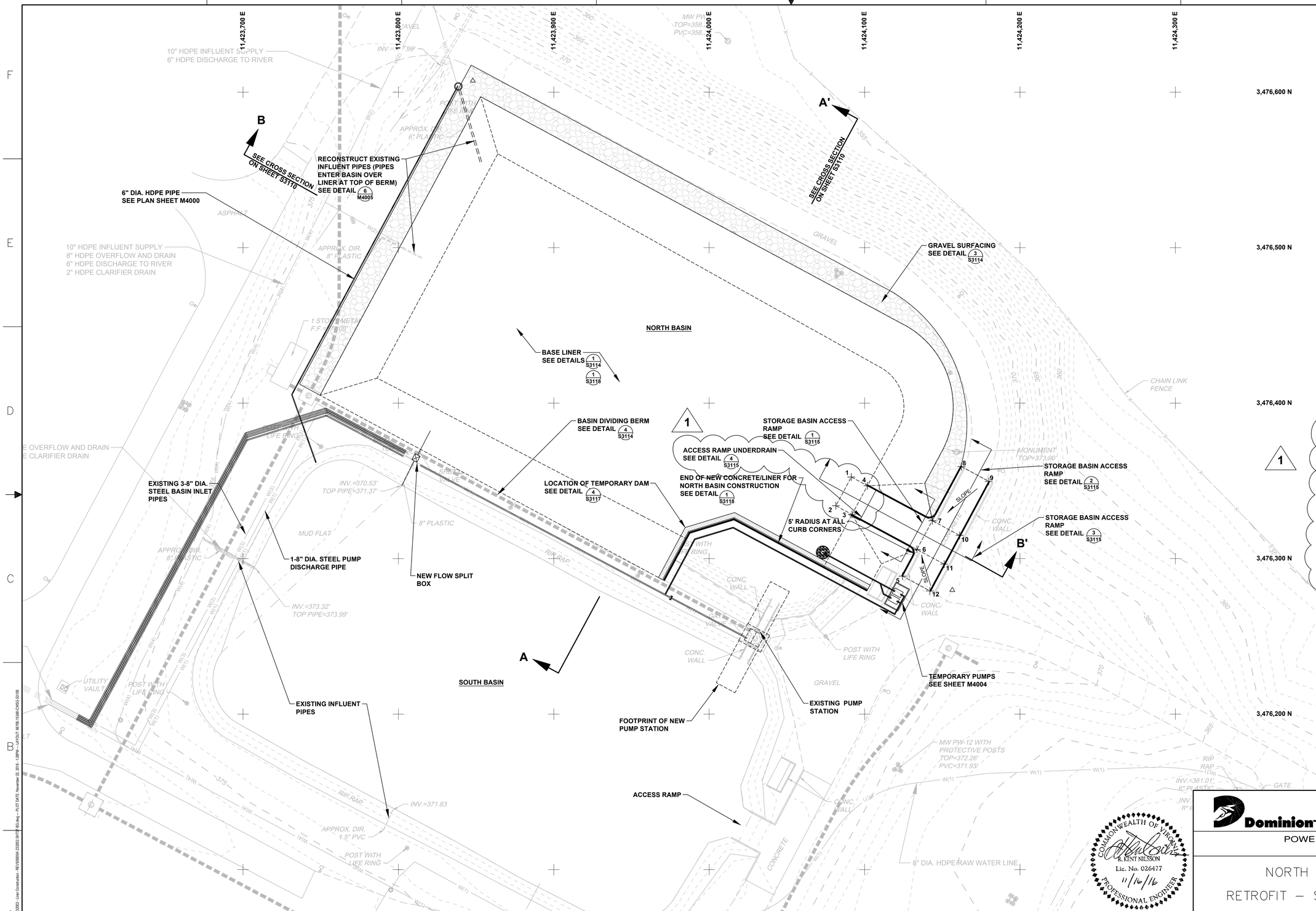

NOTES

1. REFER TO PLAN SHEET S3103 OF THIS PLAN SET FOR STANDARD LEGEND AND CONTROL POINT LOCATIONS.
2. REFER TO SHEETS S3114 AND S3118 FOR JOINTED PLAIN CONCRETE PAVEMENT NOTES AND JOINTING DETAIL.
3. THE STORAGE CAPACITY OF THE RETROFITTED NORTH BASIN WITH THE TEMPORARY DAM IN PLACE IS APPROXIMATELY 8.8 ACRE FEET WITH 2 FEET OF FREEBOARD. THE STORAGE CAPACITY OF THE RETROFITTED NORTH BASIN WITHOUT THE DAM TO EL. 372 IS 8.7 ACRE FEET (12.1 ACRE FEET TO EL. 374).
4. BASE 10" THICK JOINTED PLAIN CONCRETE PAVEMENT DESIGNED FOR LOADING FROM A CAT 925K WHEEL LOADER AXLE LOAD AND SPACING. REFER TO DETAIL 3 ON SHEET S3118.
5. REFER TO S3107 FOR CONSTRUCTION COORDINATES OF PIPES.

1

NORTH BASIN RAMP - See Details 1, 2 and 3 on Plan Sheet S3115

POINT NO.	DESIGN LOCATION NORTH	DESIGN LOCATION EAST	TOP OF CONCRETE GRADES DESIGN (ft)	COMMENTS
1	3476352.49	11424091.47	364.97	End of Ramp 8%
2	3476334.00	11424081.51	364.97	End of Ramp 8%
3	3476328.40	11424091.90	365.91	Intersection of 8% and 16% Ramp
4	3476346.89	11424101.86	365.91	Intersection of 8% and 16% Ramp
5	3476288.75	11424124.41	374.00	Corner of Ramp
6	3476305.92	11424133.65	373.50	Corner of Ramp
7	3476324.41	11424143.61	373.50	Corner of Ramp
8	3476359.19	11424162.34	374.00	Corner of Ramp
9	3476349.70	11424179.95	374.40	Corner of Ramp
10	3476314.93	11424161.22	374.00	Start of 2.5% slope
11	3476296.44	11424151.26	374.00	Start of 2.5% slope
12	3476279.27	11424142.01	374.20	Corner of Ramp

COMMONWEALTH OF VIRGINIA
R. KENT NILSSON
Lic. No. 026477
11/16/16
PROFESSIONAL ENGINEER

Dominion
TRC

POWER GENERATION ENGINEERING
RICHMOND, VIRGINIA

NORTH BASIN BASE AND PAVING

RETROFIT – SLUDGE SEDIMENTATION BASINS CLOVER, VIRGINIA

REV	DATE	DSGN	DRWN	CHKD	DSGN SUPV	PROJ ENGR	CIVIL ENGR	ELEC ENGR	MECH ENGR	ARCH	E.M. ENGR	I&C ENGR	REV	DATE	DSGN	DRWN	CHKD	DSGN SUPV	PROJ ENGR	CIVIL ENGR	ELEC ENGR	MECH ENGR	ARCH	E.M. ENGR	I&C ENGR	REV	DATE	DSGN	DRWN	CHKD	DSGN SUPV	PROJ ENGR	CIVIL ENGR	ELEC ENGR	MECH ENGR	ARCH	E.M. ENGR	I&C ENGR	REV	DATE	DSGN	DRWN	CHKD	DSGN SUPV	PROJ ENGR	CIVIL ENGR	ELEC ENGR	MECH ENGR	ARCH	E.M. ENGR	I&C ENGR
																										1	11 16 2016	DM	LLS	JNH		NA	RKN	CS	DS				0	04 08 2016	DM	LLS	JNH		NA	RKN	CS	DS				

REVISED LINER SYSTEM

ISSUED FOR BID

DSGN D.MARSHALL	DSGN SUPV	DATE NOVEMBER 2016 DGNSPEC FOR FILE VERIFICATION	
DRWN L. STORMER	ENGR SUPV	DRAWING NO.	REV.
CHKD JH	PROJ ENGR	66706-15348-CWSG-S3109	1
DISPL ENGR ---	SCALE: AS NOTED	UNLESS OTHERWISE NOTED	SH 11 OF 41

DRAWING NAME: J:\Dominion Resources\Clover\232002 - Liner Construction - RE\W00\66 222002 S3109 - 50 dwg - TL:DT DATE: November 22, 2016 - 2:38PM - LAYOUT: 66706-15348-CWSG-S3109

NOTES

1. REFER TO PLAN SHEET S3103 OF THIS PLAN SET FOR STANDARD LEGEND AND CONTROL POINT LOCATIONS.
2. EXISTING DESIGN GRADES BASED ON DRAWING 15348-1STF-S3001 REV12.

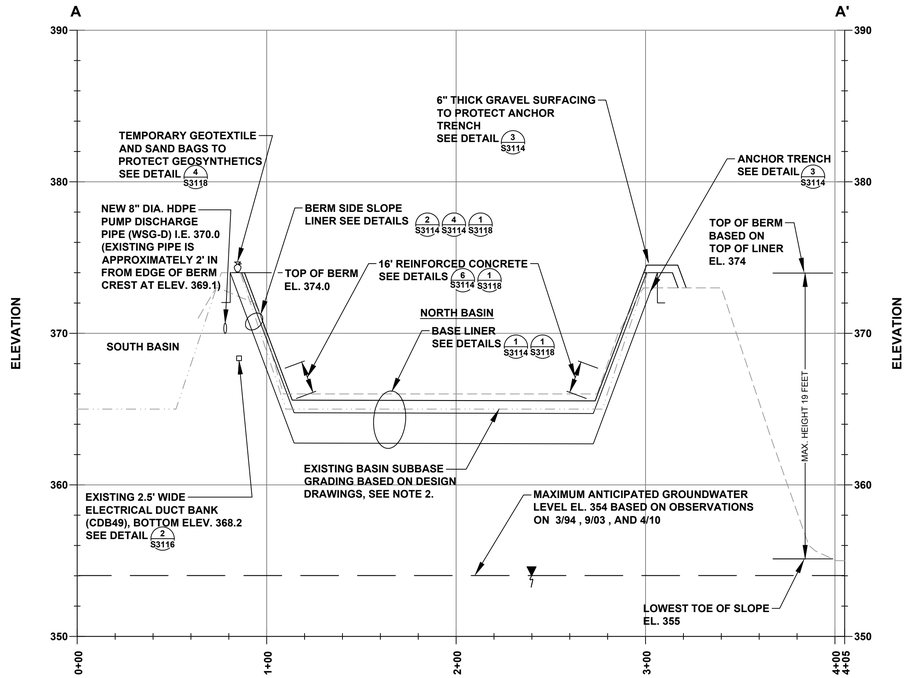

CROSS SECTION A-A'

(REFER TO PLAN SHEET S3108 & S3109 FOR LOCATION)

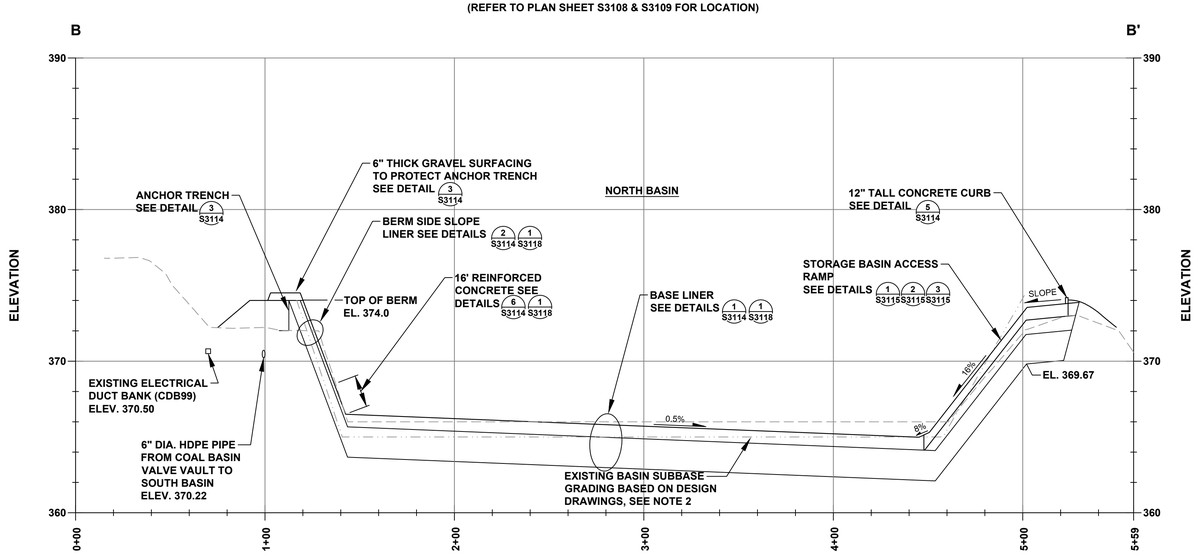

CROSS SECTION B-B'

(REFER TO PLAN SHEET S3108 & S3109 FOR LOCATION)

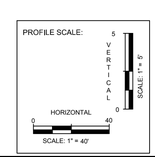

COMMONWEALTH OF VIRGINIA
R. KENT NILSSON
Lic. No. 026477
11/16/16
PROFESSIONAL ENGINEER

Dominion™ TRC

POWER GENERATION ENGINEERING
RICHMOND, VIRGINIA

NORTH BASIN CROSS SECTIONS

RETROFIT – SLUDGE SEDIMENTATION BASINS
CLOVER, VIRGINIA

REV	DATE	DSGN	DRWN	CHKD	DSGN SUPV	PROJ ENGR	CIVIL ENGR	ELEC ENGR	MECH ENGR	ARCH	E.M. ENGR	I&C ENGR	REVISION
1	11 16 2016	DM	LLS	JNH		NA	RKN	CS	DS				REVISED LINER SYSTEM
0	04 08 2016	DM	LLS	JNH		NA	RKN	CS	DS				ISSUED FOR BID

DSGN D.MARSHALL	DSGN SUPV	DATE NOVEMBER 2016 DGNSPEC FOR FILE VERIFICATION	
DRWN L. STORMER	ENGR SUPV	DRAWING NO. 66706–15348–CWSG–S3110	REV. 1
CHKD JH	PROJ ENGR		
DISPL ENGR ---	SCALE: AS NOTED	UNLESS OTHERWISE NOTED	SH 12 OF 40

DRAWING NAME: J:\Dominion Resources\Clover\22002_Liner Construction - RE\1000\04-22002.0111\03.dwg -- PLOT DATE: November 15, 2016 - 10:34AM -- LAYOUT: 66706-15348-CWSG-S3110

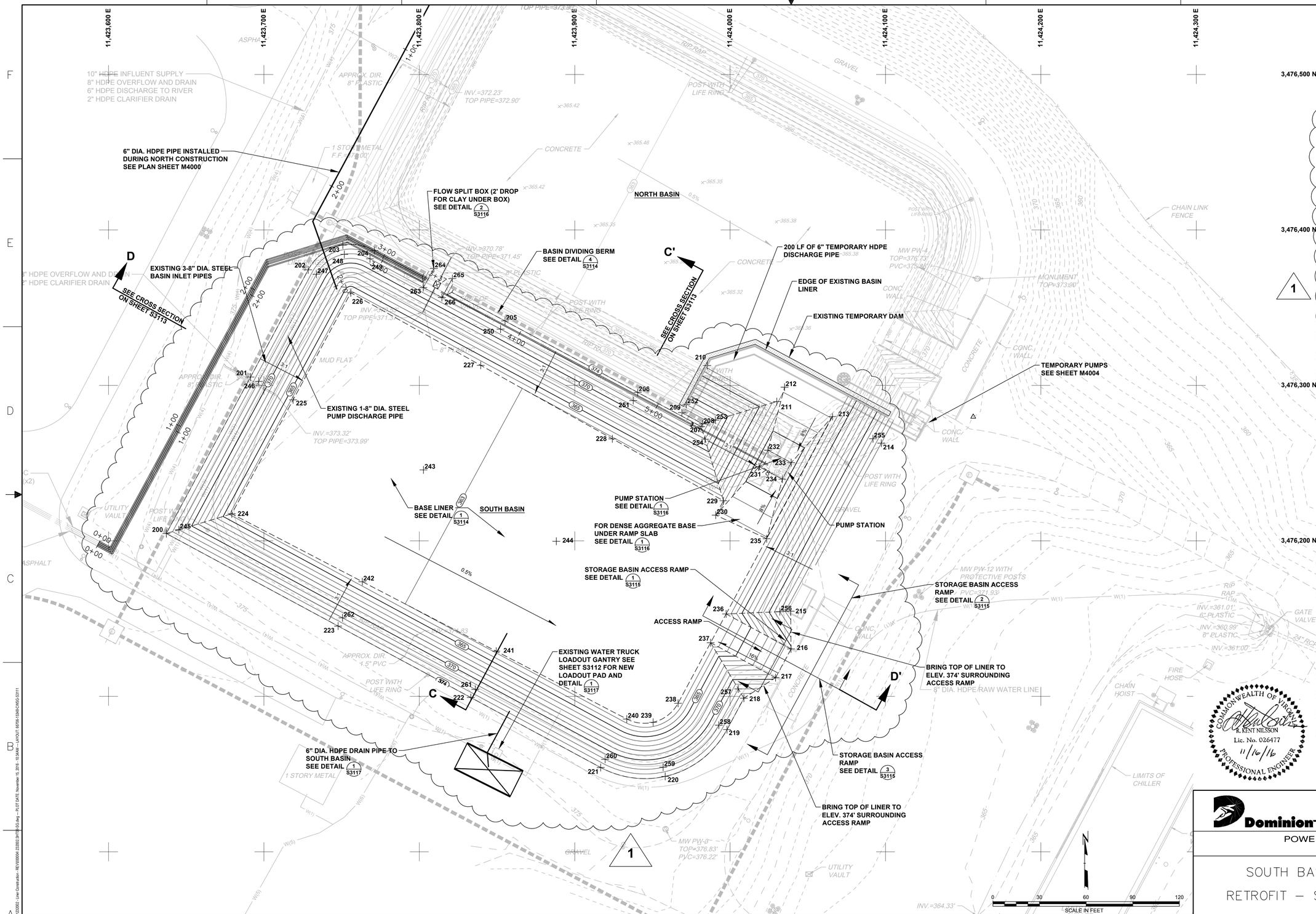

NOTES

1. REFER TO PLAN SHEET S3103 OF THIS PLAN SET FOR STANDARD LEGEND AND CONTROL POINT LOCATIONS.

2. EXISTING PUMP STATION STRUCTURE, PIPING AND ELECTRICAL SHALL BE DEMOLISHED AND DISPOSED OFF-SITE.

POINT NO.	DESIGN LOCATION NORTH	DESIGN LOCATION EAST	SUBBASE GRADES DESIGN (ft)	BASE GRADES DESIGN (ft)
200	3476204.72	11423637.17	374.00	NA
201	3476305.41	11423691.38	374.00	NA
202	3476374.34	11423728.49	374.00	NA
203	3476390.28	11423750.77	374.00	NA
204	3476388.73	11423771.07	374.00	NA
205	3476341.46	11423855.16	374.00	NA
206	3476295.48	11423940.57	374.00	NA
207	3476273.49	11423981.42	374.00	NA
208	3476275.25	11423982.37	374.00	NA
209	3476282.46	11423968.98	374.00	NA
210	3476312.80	11423985.32	362.51	364.51
211	3476289.57	11424030.08	362.26	364.26
212	3476298.84	11424035.07	362.26	364.26
213	3476279.98	11424065.90	362.10	364.10
214	3476282.83	11424097.26	374.00	NA
215	3476154.75	11424039.01	374.00	376.00
216	3476130.49	11424039.20	369.67	371.67
217	3476112.00	11424029.25	369.67	371.67
218	3476098.81	11424008.88	374.00	376.00
219	3476078.60	11423998.01	374.00	NA
220	3476048.49	11423958.24	374.00	NA
221	3476054.22	11423916.74	374.00	NA
222	3476099.23	11423833.13	374.00	NA
223	3476145.21	11423747.72	374.00	NA
224	3476217.37	11423679.32	363.63	365.63
225	3476290.69	11423718.79	363.63	365.63
226	3476359.59	11423755.87	363.63	365.63
227	3476312.92	11423839.53	363.15	365.15
228	3476265.66	11423924.25	362.67	364.67
229	3476225.78	11423995.74	362.26	364.26
230	3476216.53	11423990.76	362.26	364.26
231	3476247.76	11424018.67	359.00	361.00
232	3476258.32	11424024.36	359.00	361.00
233	3476250.27	11424039.33	359.00	361.00
234	3476239.70	11424033.64	359.00	361.00
235	3476201.37	11424023.51	362.08	364.08
236	3476152.98	11423997.43	362.08	364.08
237	3476134.49	11423987.48	362.08	364.08
238	3476095.56	11423968.51	362.08	364.08
239	3476083.28	11423950.45	362.12	364.12
240	3476085.40	11423933.52	362.20	364.20
241	3476129.04	11423849.45	362.67	364.67
242	3476173.75	11423763.34	363.16	365.16
243	3476245.64	11423602.69	363.15	365.15
244	3476199.75	11423888.15	362.67	364.67
245	3476207.16	11423645.30	372.00	374.00
246	3476302.57	11423696.86	372.00	374.00
247	3476371.49	11423733.77	372.00	374.00
248	3476384.36	11423751.75	372.00	374.00
249	3476381.45	11423768.22	372.00	374.00
250	3476336.20	11423852.28	372.00	374.00
251	3476290.22	11423937.69	372.00	374.00
252	3476287.74	11423971.83	372.00	374.00
253	3476277.69	11423990.50	372.00	374.00
254	3476265.36	11423983.86	372.00	374.00
255	3476265.71	11424091.94	372.00	374.00
256	3476154.46	11424032.04	372.00	374.00
257	3476104.79	11424005.29	372.00	374.00
258	3476081.45	11423992.72	372.00	374.00
259	3476054.43	11423956.91	372.00	374.00
260	3476059.50	11423919.58	372.00	374.00
261	3476104.49	11423836.01	372.00	374.00
262	3476150.47	11423750.80	372.00	374.00
263	3476382.95	11423802.59	372.00	374.00
264	3476375.21	11423809.36	372.00	374.00
265	3476368.79	11423821.28	372.00	374.00
266	3476356.53	11423814.51	372.00	374.00

COMMONWEALTH OF VIRGINIA
K. KENT NILSSON
Lic. No. 026477
11/16/16
PROFESSIONAL ENGINEER

Dominion
TRC

POWER GENERATION ENGINEERING
RICHMOND, VIRGINIA

SOUTH BASIN LINER SUBBASE GRADES

RETROFIT – SLUDGE SEDIMENTATION BASINS CLOVER, VIRGINIA

REV	DATE	DSGN	DRWN	CHKD	DSGN SUPV	PROJ ENGR	CIVIL ENGR	ELEC ENGR	MECH ENGR	ARCH	E.M. ENGR	I&C ENGR
1	11 16 2016	DM	LLS	JNH		NA	RKN	CS	DS			
0	04 08 2016	DM	LLS	JNH		NA	RKN	CS	DS			

1 REVISED LINER SYSTEM

0 ISSUED FOR BID

DSGN D.MARSHALL	DSGN SUPV	DATE NOVEMBER 2016 DGNSPEC FOR FILE VERIFICATION	
DRWN L. STORMER	ENGR SUPV	DRAWING NO. 66706-15348-CWSG-S3111	REV. 1
CHKD JH	PROJ ENGR		
DISPL ENGR ---	SCALE: AS NOTED	UNLESS OTHERWISE NOTED	SH 13 OF 41

DRAWING NAME: J:\Dominion Resources\Clover\22002 - Liner Construction - RE\W00006 \22002 SHEETS\S3 dwg - TL CFT DATE: November 16, 2016 - 10:34AM - LAYOUT: 66706-15348-CWSG-S3111

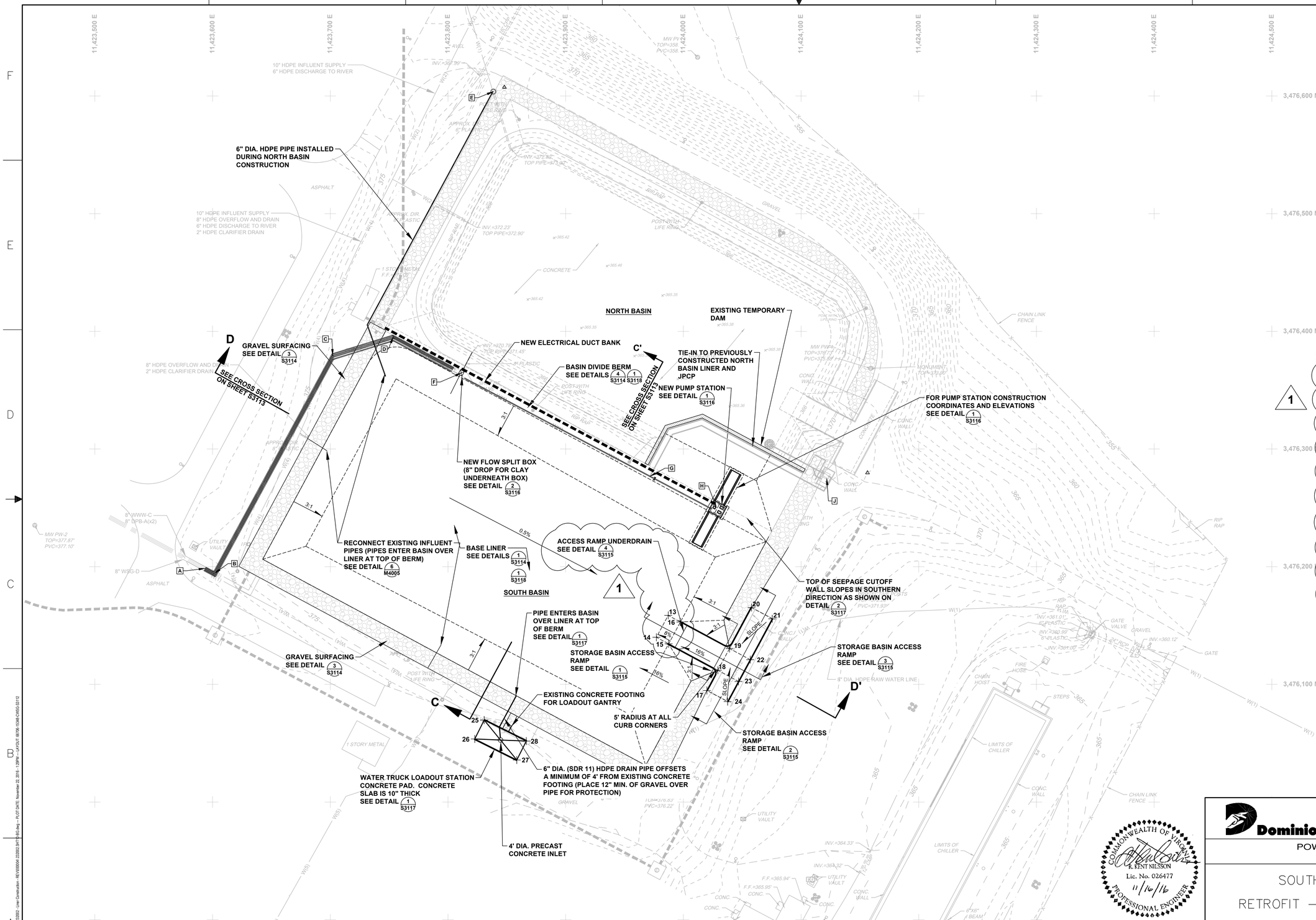

NOTES

1. REFER TO PLAN SHEET S3103 OF THIS PLAN SET FOR STANDARD LEGEND AND CONTROL POINT LOCATIONS.
2. REFER TO SHEETS S3114 AND S3118 FOR JOINTED PLAIN CONCRETE PAVEMENT NOTES AND JOINTING DETAIL.
3. PROVIDE 4" THICK CONCRETE PAVEMENT ON TOP OF BASIN DIVIDE BERM WITH TRANSVERSE JOINTS AT MAXIMUM 8 FOOT SPACINGS AND EXPANSION JOINTS AT MAXIMUM 50 FOOT SPACING.
4. PROVIDE ISOLATION JOINTS BETWEEN BASIN SURFACE CONCRETE PAVEMENT AND PUMP STATION.
5. THE STORAGE CAPACITY OF THE SOUTH BASIN TO EL. 372 FREEBOARD IS 8.6 ACRE FEET (11.9 ACRE FEET TO EL. 374).
6. REFER TO SHEET S3107 FOR CONSTRUCTION COORDINATES OF PIPES.

1

SOUTH BASIN RAMP - See Details 1, 2 and 3 on Plan Sheet S3115

POINT NO.	DESIGN LOCATION NORTH	DESIGN LOCATION EAST	TOP OF CONCRETE GRADES DESIGN (ft)	COMMENTS
13	3476158.67	11423987.12	364.97	End of Ramp 8%
14	3476140.02	11423977.08	364.97	End of Ramp 8%
15	3476134.50	11423987.47	365.91	Intersection of 8% and 16% Ramp
16	3476152.99	11423997.43	365.91	Intersection of 8% and 16% Ramp
17	3476094.83	11424020.00	374.00	Corner of Ramp
18	3476112.00	11424029.25	373.50	Corner of Ramp
19	3476130.49	11424039.21	373.50	Corner of Ramp
20	3476165.26	11424057.94	374.00	Corner of Ramp
21	3476155.78	11424075.55	374.40	Corner of Ramp
22	3476121.00	11424056.82	374.00	Start of 2.5% slope
23	3476102.52	11424046.86	374.00	Start of 2.5% slope
24	3476085.35	11424037.61	374.20	Corner of Ramp

LOADOUT PAD - See Detail 1 on Plan Sheet S3117

POINT NO.	DESIGN LOCATION NORTH	DESIGN LOCATION EAST	TOP OF CONCRETE GRADES DESIGN (ft)	COMMENTS
25	3476069.72	11423830.77	376.44	Corner of Loadout Pad
26	3476053.62	11423822.72	376.44	Corner of Loadout Pad
27	3476035.74	11423858.50	376.44	Corner of Loadout Pad
28	3476051.84	11423866.55	376.44	Corner of Loadout Pad

COMMONWEALTH OF VIRGINIA
R. KENT NILSSON
Lic. No. 026477
11/16/16
PROFESSIONAL ENGINEER

Dominion
TRC

POWER GENERATION ENGINEERING
RICHMOND, VIRGINIA

SOUTH BASIN BASE AND PAVING
RETROFIT – SLUDGE SEDIMENTATION BASINS
CLOVER, VIRGINIA

REV	DATE	DSGN	DRWN	CHKD	DSGN SUPV	PROJ ENGR	CIVIL ENGR	ELEC ENGR	MECH ENGR	ARCH	E.M. ENGR	I&C ENGR	
1	11 16 2016	DM	LLS	JNH	NA	RKN	CS	DS					REVISED LINER SYSTEM
0	04 08 2016	DM	LLS	JNH	NA	RKN	CS	DS					ISSUED FOR BID

DSGN D.MARSHALL	DSGN SUPV	DATE NOVEMBER 2016 DGNSPEC FOR FILE VERIFICATION	
DRWN L. STORMER	ENGR SUPV	DRAWING NO. 66706–15348–CWSG–S3112	REV. 1
CHKD JH	PROJ ENGR		
DISPL ENGR ---	SCALE: AS NOTED	UNLESS OTHERWISE NOTED	SH 14 OF 41

DRAWING NAME: J:\Dominion Resources\Clover\232002 - Liner Construction - REV\00\0004 232002-S3113-S3120.dwg – PLOT DATE: November 22, 2016 – 3:28PM – LAYOUT: 66706-15348-CWSG-S3112

NOTES

1. REFER TO PLAN SHEET S3103 OF THIS PLAN SET FOR STANDARD LEGEND AND CONTROL POINT LOCATIONS.
2. EXISTING DESIGN GRADES BASED ON DRAWING 15348-1STF-S3001 REV12.

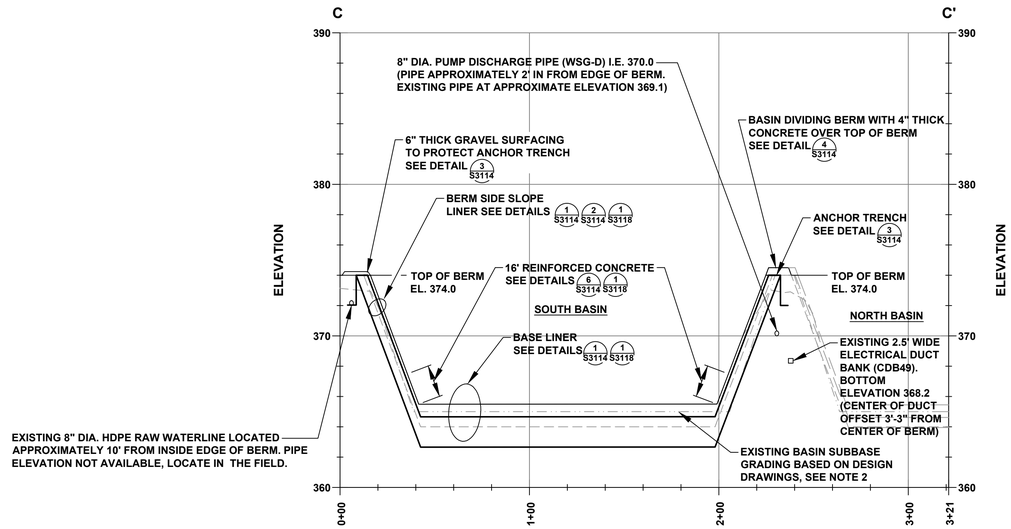

CROSS SECTION C-C'

(REFER TO PLAN SHEET S3111 & S3112 FOR LOCATION)

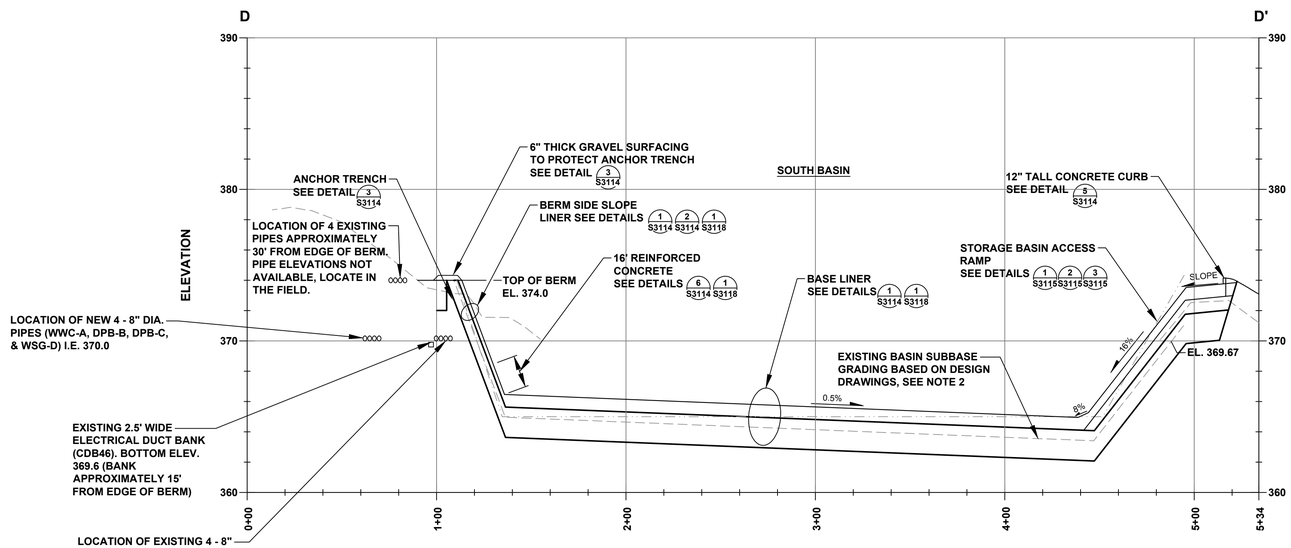

CROSS SECTION D-D'

(REFER TO PLAN SHEET S3111 & S3112 FOR LOCATION)

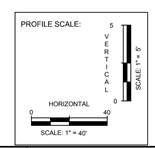

COMMONWEALTH OF VIRGINIA
R. KENT NILSSON
Lic. No. 026477
11/16/16
PROFESSIONAL ENGINEER

Dominion™ TRC

POWER GENERATION ENGINEERING
RICHMOND, VIRGINIA

SOUTH BASIN CROSS SECTIONS

RETROFIT – SLUDGE SEDIMENTATION BASINS
CLOVER, VIRGINIA

DSGN D.MARSHALL	DSGN SUPV	DATE NOVEMBER 2016 DGNSPEC FOR FILE VERIFICATION	
DRWN L. STORMER	ENGR SUPV	DRAWING NO.	REV.
CHKD JH	PROJ ENGR	66706–15348–CWSG–S3113	1
DISPL ENGR ---	SCALE: AS NOTED	UNLESS OTHERWISE NOTED	SH 15 OF 40

REV	DATE	DSGN	DRWN	CHKD	DSGN SUPV	PROJ ENGR	CIVIL ENGR	ELEC ENGR	MECH ENGR	ARCH	E.M. ENGR	I&C ENGR	REV	DATE	DSGN	DRWN	CHKD	DSGN SUPV	PROJ ENGR	CIVIL ENGR	ELEC ENGR	MECH ENGR	ARCH	E.M. ENGR	I&C ENGR	REV	DATE	DSGN	DRWN	CHKD	DSGN SUPV	PROJ ENGR	CIVIL ENGR	ELEC ENGR	MECH ENGR	ARCH	E.M. ENGR	I&C ENGR	REV	DATE	DSGN	DRWN	CHKD	DSGN SUPV	PROJ ENGR	CIVIL ENGR	ELEC ENGR	MECH ENGR	ARCH	E.M. ENGR	I&C ENGR
																																						1	11 16 2016	DM	LLS	JNH		NA	RKN	CS	DS					0	04 08 2016	DM	LLS	JNH		NA	RKN	CS	DS				

REVISED LINER SYSTEM

ISSUED FOR BID

DRAWING NAME - Dominion Resources/Clover/22002 - Liner Construction - RE\V0000\M-22002-S3113.dwg – PLOT DATE: November 15, 2016 - 10:34AM – LAYOUT: 66706-15348-CWSG-S3113

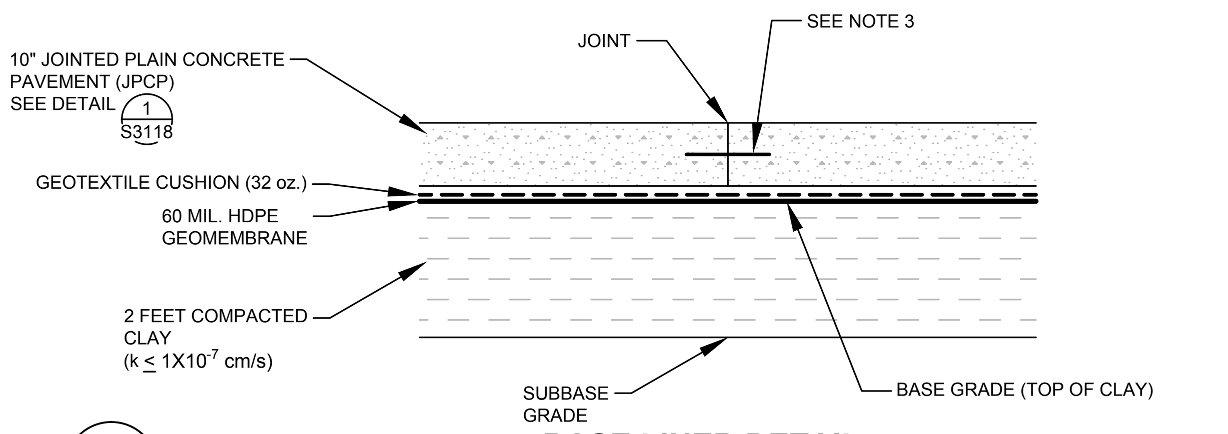

1 S3114 **BASE LINER DETAIL**

(NOT TO SCALE)

REFERENCED ON SHEETS S3107, S3108, S3109, S3110, S3111, S3112, S3113, M4000

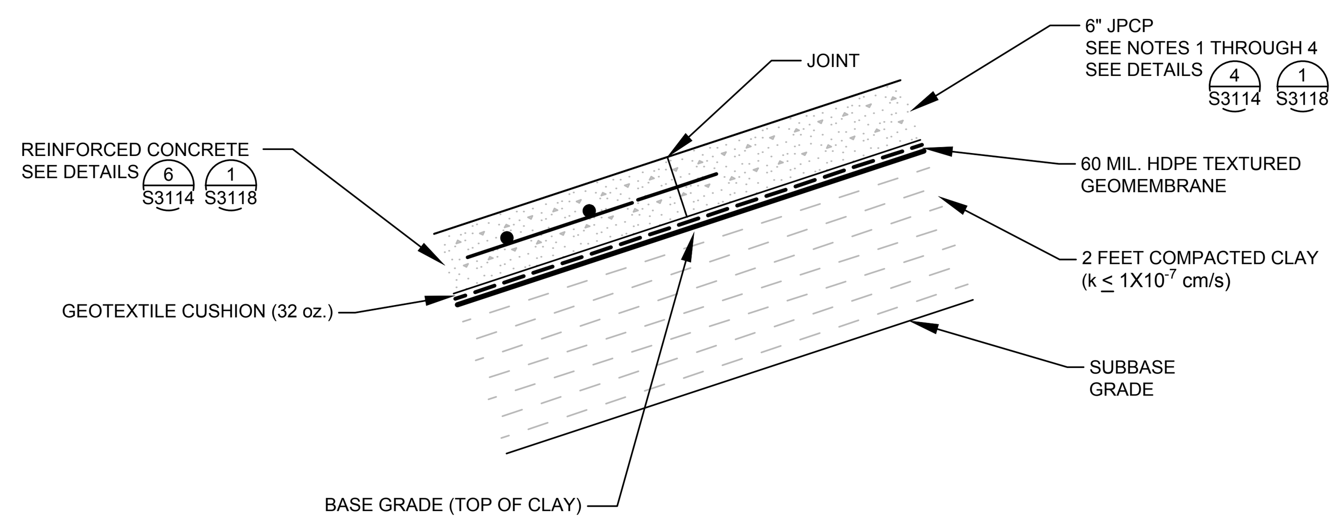

2 S3114 **BERM SIDE SLOPE LINER**

(NOT TO SCALE)

REFERENCED ON SHEETS S3110, S3113

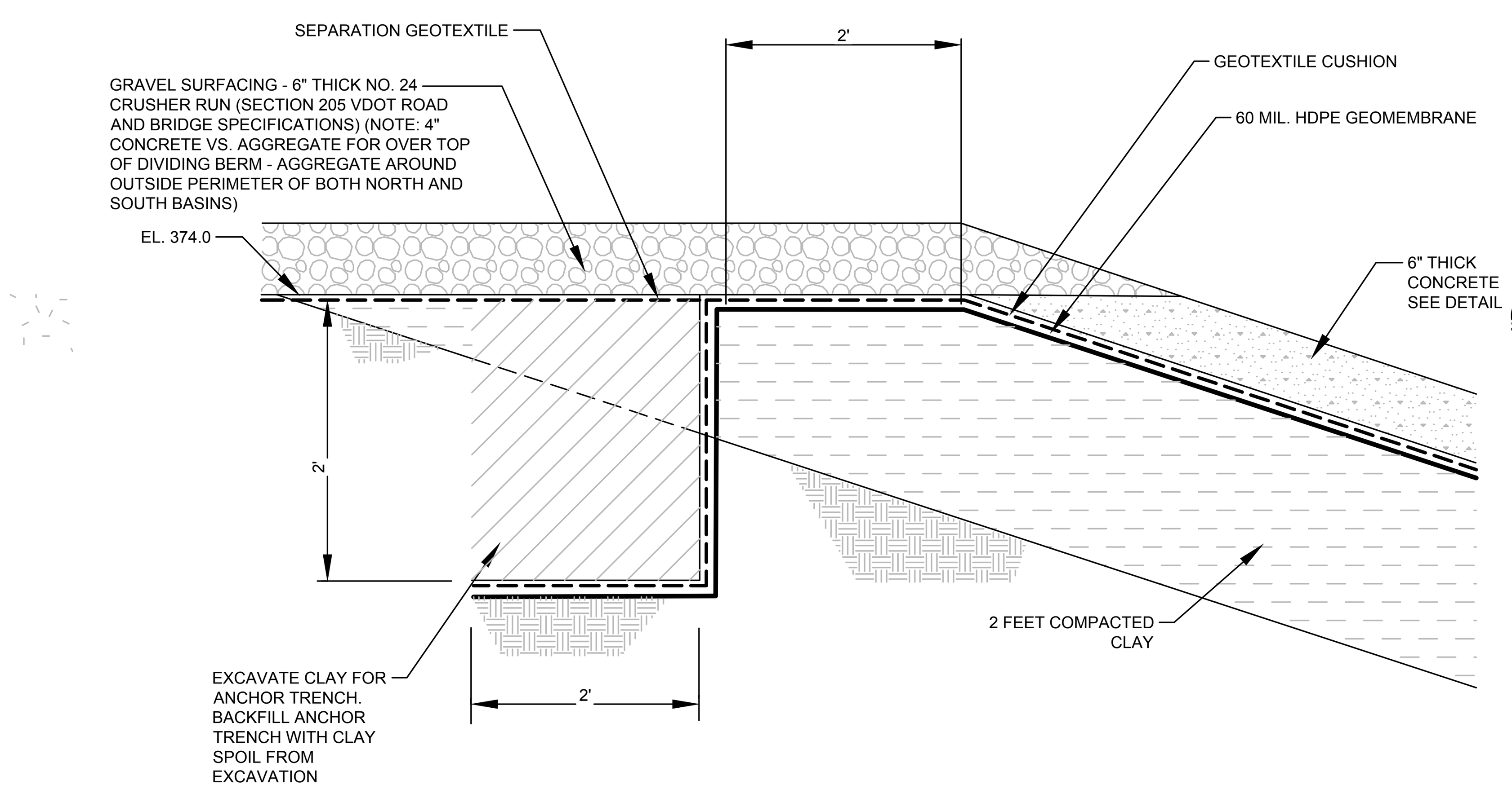

3 S3114 **ANCHOR TRENCH AND GRAVEL SURFACE**

(NOT TO SCALE)

REFERENCED ON SHEETS S3106, S3109, S3110, S3112, S3113

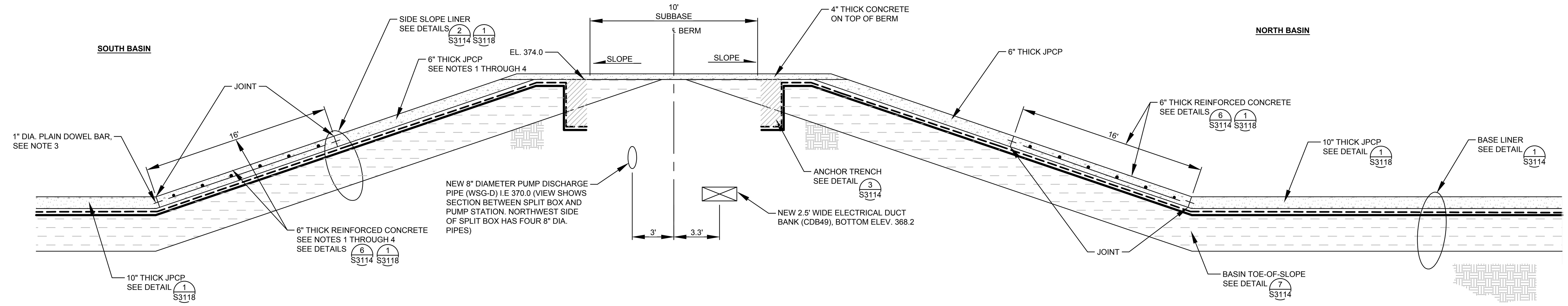

4 S3114 **BASIN DIVIDING BERM (TYPICAL)**

(NOT TO SCALE)

REFERENCED ON SHEETS S3107, S3108, S3109, S3110, S3111, S3112, S3113

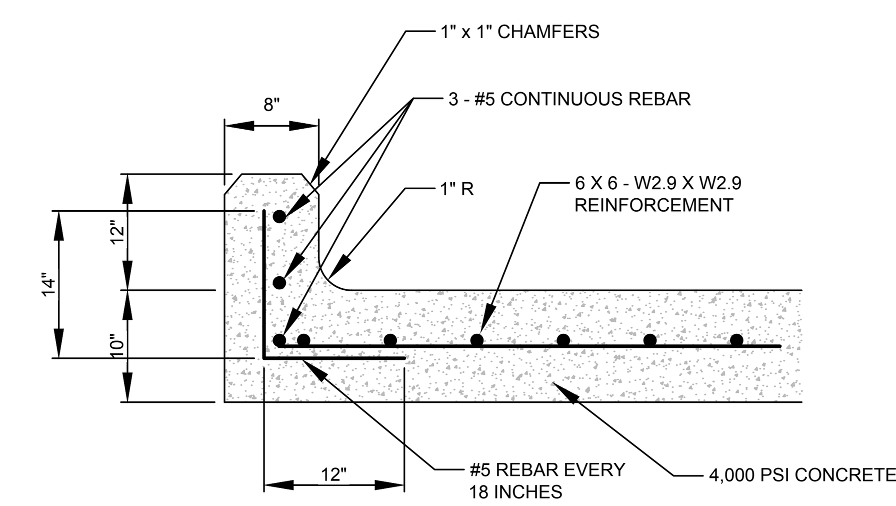

5 S3114 **REINFORCED CONCRETE ACCESS ROAD PAVEMENT DETAIL**

(NOT TO SCALE)

REFERENCED ON SHEETS S3110, S3113

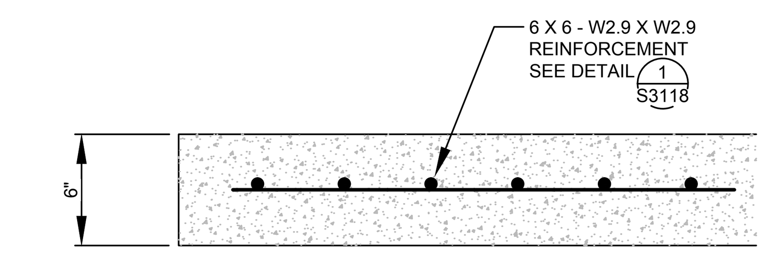

6 S3114 **REINFORCED CONCRETE DETAIL**

(NOT TO SCALE)

REFERENCED ON SHEETS S3110, S3113

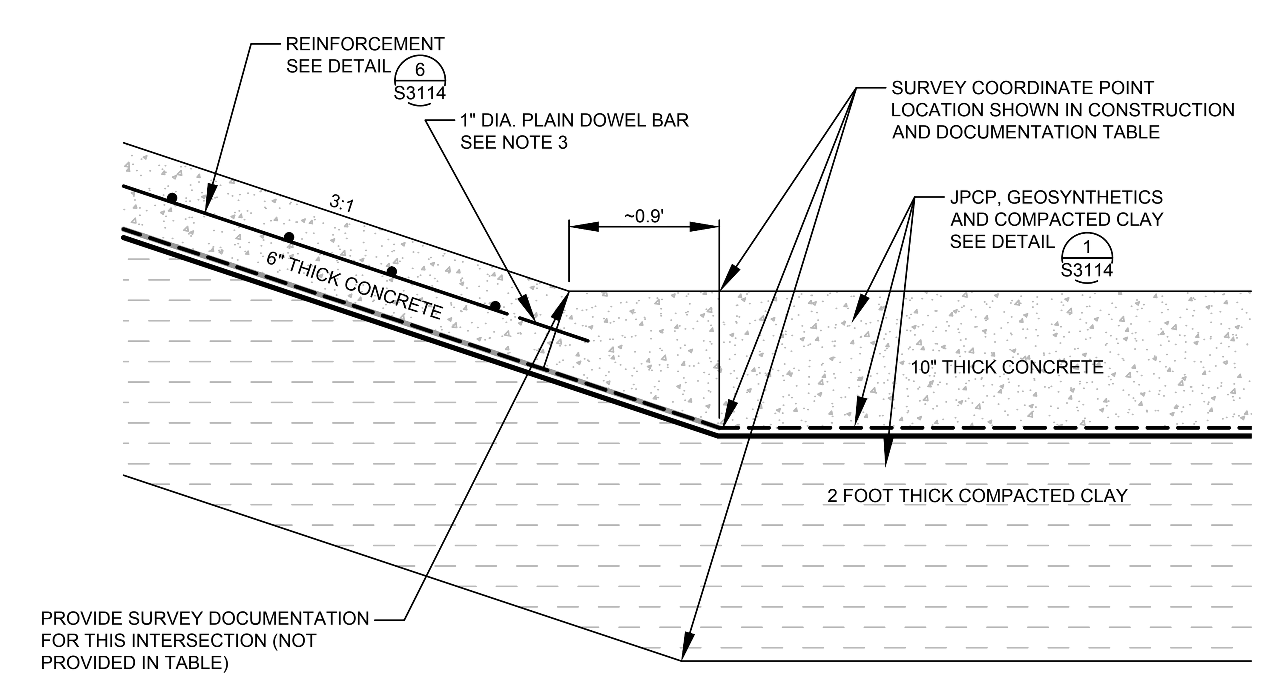

7 S3114 **BASIN TOE-OF-SLOPE DETAIL (TYPICAL)**

(NOT TO SCALE)

REFERENCED ON SHEET S3114

NOTES

1. TYPICAL SLAB DIMENSION IS 20' x 20' FOR JOINTED PLAIN CONCRETE PAVEMENT. MAXIMUM SLAB DIMENSION IS 24 FEET. SLAB LENGTHS SHALL BE LESS THAN 1.25 TIMES THE SLAB WIDTH. CUT OR FORM ALL JOINTS. PROVIDE 1/2" THICK EXPANSION JOINTS EVERY 50 FEET.
2. FILL CONTRACTION AND EXPANSION JOINTS WITH CLASS B SILICONE SEALANT SECTION 212.02(b) OF THE VDOT STANDARDS WITH BACKER ROD AND BOND BREAKING TAPE. JOINT SEALANTS SHALL BE INSTALLED IN ACCORDANCE WITH SECTION 316.04(m) OF THE VDOT STANDARDS.
3. PROVIDE 1" DIAMETER PLAIN BAR DOWEL EVERY 1' ALONG JOINTS. GRADE 60 STEEL, EPOXY COATED, MIN. 16" LENGTH.
4. FOR REINFORCED CONCRETE MAXIMUM LENGTH BETWEEN CONTRACTION JOINTS IS 40 FEET. ALIGN JOINTS OF REINFORCED CONCRETE WITH JPCP.
5. PROVIDE REINFORCED CONCRETE FOR IRREGULAR SHAPED SLABS LOCATED ON CORNERS OF SIDESLOPES.

LINE AND SHADING LEGEND

- 60 MIL. HDPE GEOMEMBRANE
- GEOTEXTILE CUSHION AND SEPARATION GEOTEXTILE
- TOPSOIL
- NATIVE SOIL
- GENERAL FILL
- CONCRETE
- GRAVEL SURFACE (NO. 24 CRUSHER RUN)
- COMPACTED CLAY FILL
- DENSE AGGREGATE BASE

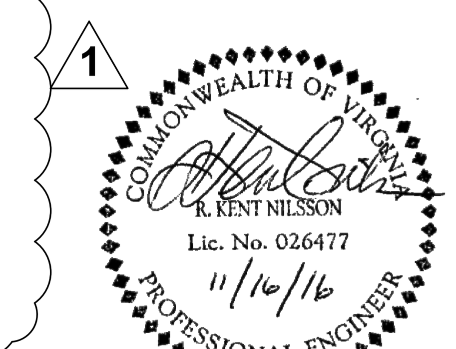

Dominion

TRC

POWER GENERATION ENGINEERING
RICHMOND, VIRGINIA

CIVIL DETAILS – NORTH AND SOUTH BASINS

RETROFIT – SLUDGE SEDIMENTATION BASINS
CLOVER, VIRGINIA

REV	DATE	DSGN	DRWN	CHKD	DSGN SUPV	PROJ ENGR	CIVIL ENGR	ELEC ENGR	MECH ENGR	ARCH	E.M. ENGR	I&C ENGR	DESCRIPTION
1	11 16 2016	DM	LLS	JNH		NA	RKN	CS	DS				REVISED LINER SYSTEM
0	04 08 2016	DM	LLS	JNH		NA	RKN	CS	DS				ISSUED FOR BID

DSGN D.MARSHALL	DSGN SUPV	DATE NOVEMBER 2016 DGNSPEC FOR FILE VERIFICATION	
DRWN L. STORMER	ENGR SUPV	DRAWING NO.	REV.
CHKD JH	PROJ ENGR	66706–15348–CWSG–S3114	1
DISPL ENGR ---	SCALE: AS NOTED	UNLESS OTHERWISE NOTED	SH 16 OF 41

DRAWING NAME: J:\Dominion Resources\Clover\... PLOT DATE: November 15, 2016 - LAYOUT: 66706-15348-CWSG-S3114

NOTES

1. PLACE 4" DIA. SDR 11 HDPE PERFORATED PIPE ALONG FULL WIDTH OF RAMP AND DISCHARGE TO DAYLIGHT ON EACH SIDE OF RAMP.

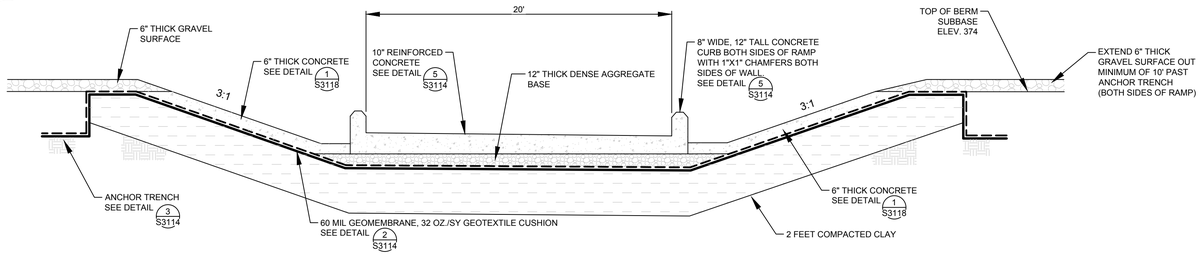

1 S3115

BASIN ACCESS RAMP

(NOT TO SCALE)

REFERENCED ON SHEETS S3107, S3108, S3109, S3110, S3111, S3112, S3113

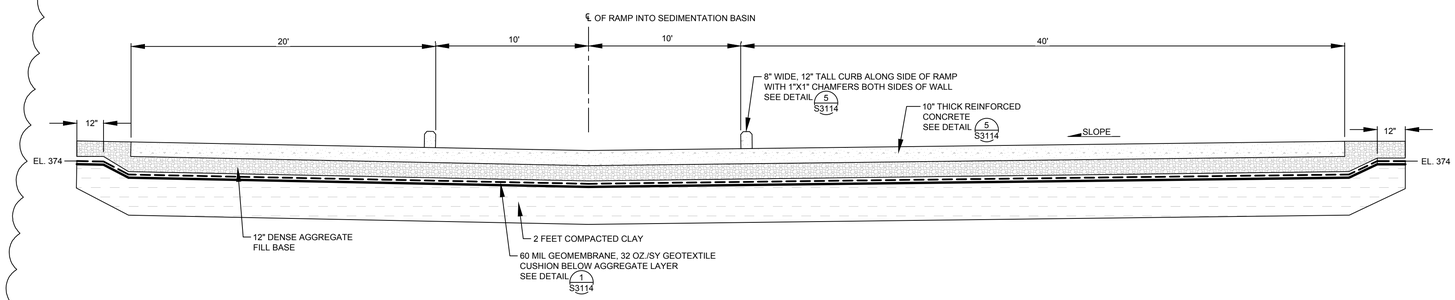

2 S3115

BASIN RAMP

(NOT TO SCALE)

REFERENCED ON SHEETS S3107, S3108, S3109, S3110, S3111, S3112, S3113

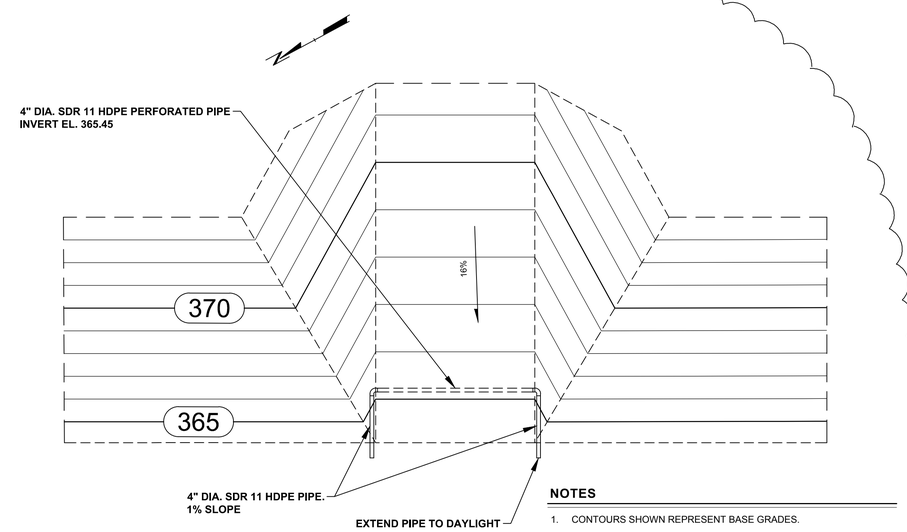

NOTES

1. CONTOURS SHOWN REPRESENT BASE GRADES.

4 S3115

ACCESS RAMP UNDERDRAIN

(NOT TO SCALE)

REFERENCED ON SHEETS S3109, S3112, AND S3115

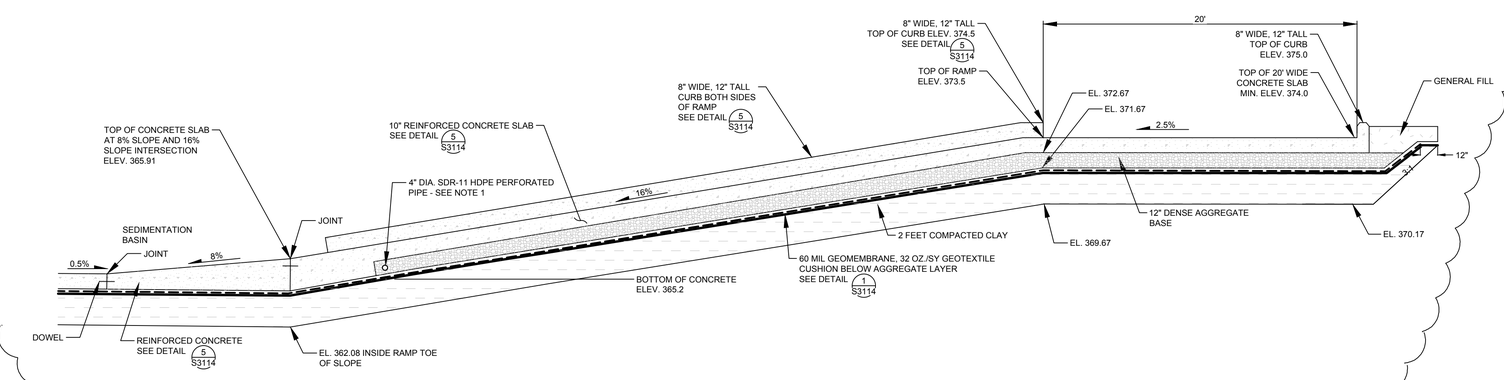

3 S3115

BASIN ACCESS RAMP

(NOT TO SCALE)

REFERENCED ON SHEETS S3107, S3108, S3109, S3110, S3111, S3112, S3113

NOTE: REFER TO PLAN SHEETS S3109 AND S3112 FOR COORDINATE POINTS AND TOP OF CONCRETE ELEVATIONS FOR RAMP LAYOUTS.

1

LINE AND SHADING LEGEND

- 60 MIL. HDPE GEOMEMBRANE
- GEOTEXTILE CUSHION AND SEPARATION GEOTEXTILE
- TOPSOIL
- NATIVE SOIL
- GENERAL FILL
- CONCRETE
- GRAVEL SURFACE (NO. 24 CRUSHER RUN)
- COMPACTED CLAY FILL
- DENSE AGGREGATE BASE

COMMONWEALTH OF VIRGINIA
R. KENT NILSSON
Lic. No. 026477
11/16/16
PROFESSIONAL ENGINEER

Dominion™ TRC

POWER GENERATION ENGINEERING
RICHMOND, VIRGINIA

CIVIL DETAILS – NORTH AND SOUTH BASINS
RETROFIT – SLUDGE SEDIMENTATION BASINS
CLOVER, VIRGINIA

DSGN D.MARSHALL	DSGN SUPV	DATE NOVEMBER 2016 DGNSPEC FOR FILE VERIFICATION	
DRWN L. STORMER	ENGR SUPV	DRAWING NO.	REV.
CHKD JH	PROJ ENGR	66706–15348–CWSG–S3115	1
DISPL ENGR ---	SCALE: AS NOTED	UNLESS OTHERWISE NOTED	SH 17 OF 41

REV	DATE	DSGN	DRWN	CHKD	DSGN SUPV	PROJ ENGR	CIVIL ENGR	ELEC ENGR	MECH ENGR	ARCH	E.M. ENGR	I&C ENGR	
1	11 16 2016	DM	LLS	JNH		NA	RKN	CS	DS				REVISED LINER SYSTEM
0	04 08 2016	DM	LLS	JNH		NA	RKN	CS	DS				ISSUED FOR BID

DRAWING NAME: J:\Dominion Resources\Clover\220202 - Liner Construction - RE\100\66706-15348\01-Dwg - CIVIL\DATE: November 22, 2016 - 1:30PM - LAYOUT: 66706-15348-CWSG-S3115

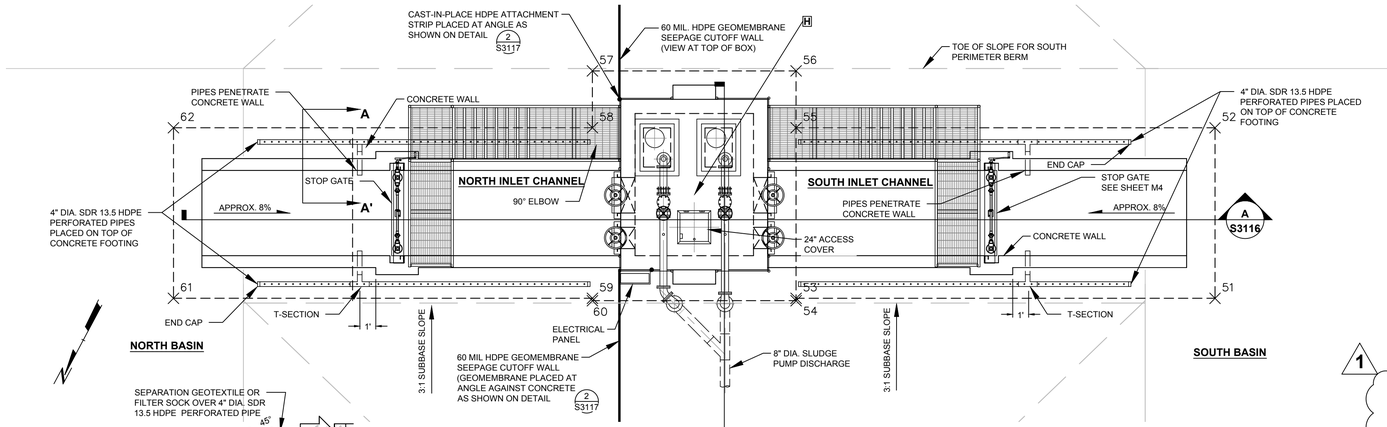

PLAN VIEW

NOTE: REFER TO TABLE BELOW COORDINATE POINTS 51 THROUGH 62 FOR LOCATING CONCRETE SLAB AT PUMP STATION. REFER TO PLAN SHEETS S6200 AND S6201 FOR CONCRETE SLAB MEASUREMENTS.

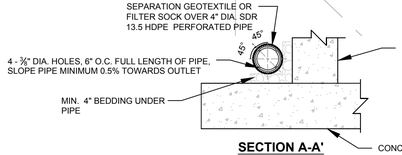

SECTION A-A'

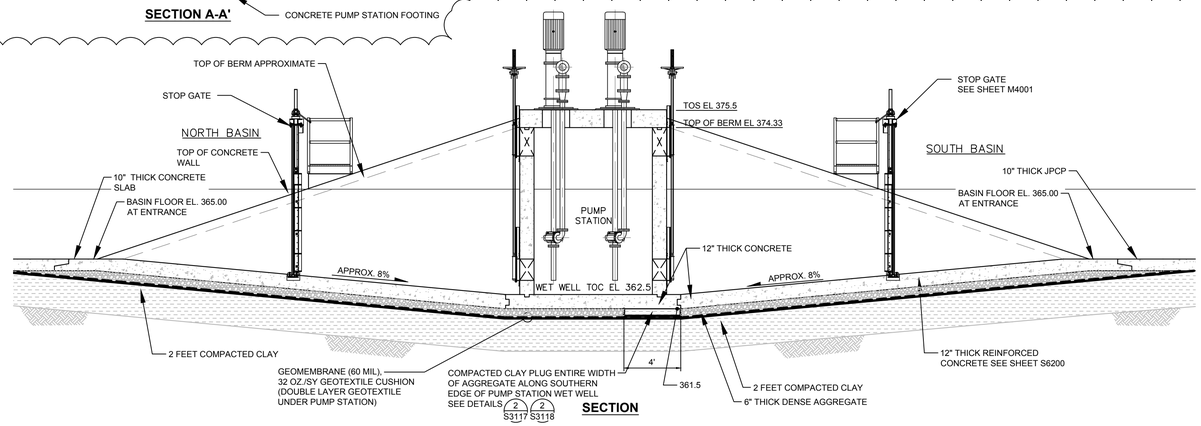

SECTION

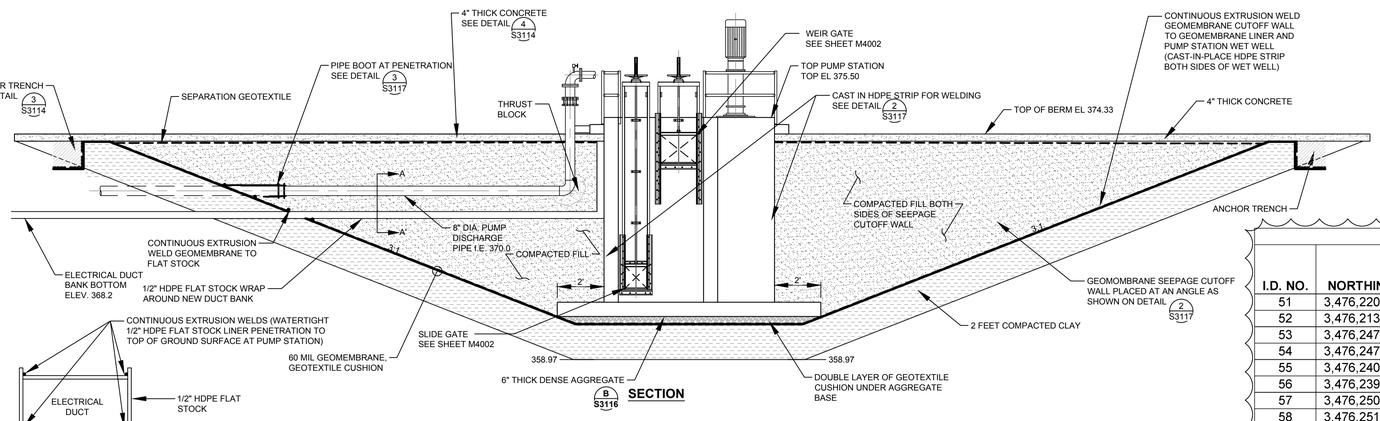

SECTION

SECTION A-A' THROUGH ELECTRICAL DUCT BANK

1 S3116 **PUMP STATION**

(NOT TO SCALE)

REFERENCED ON SHEETS S3107, S3112

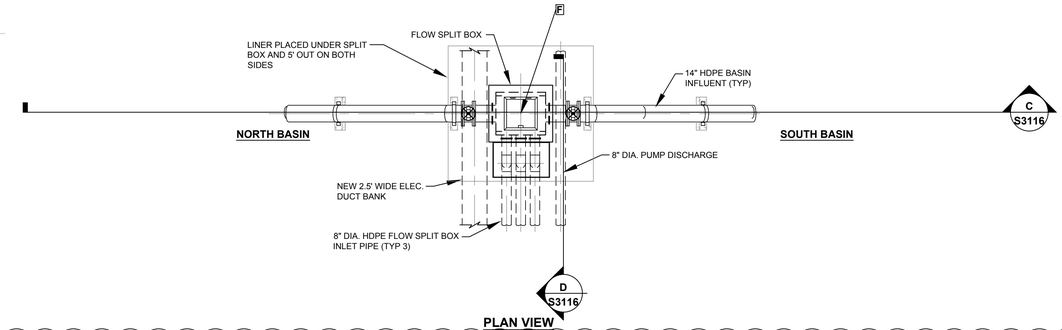

PLAN VIEW

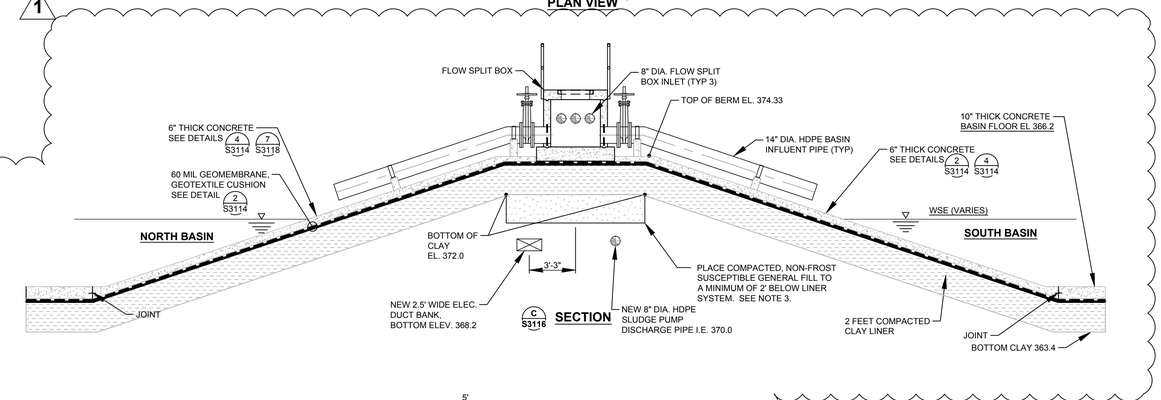

SECTION

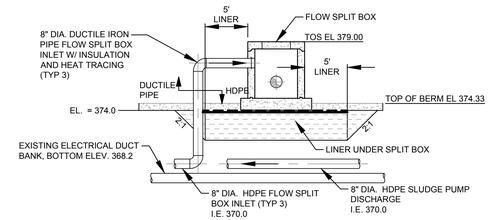

D S3116 SECTION

2 S3116 **FLOW SPLIT BOX**

(NOT TO SCALE)

REFERENCED ON SHEETS S3107, S3111, S3112

NOTE:

1. REFER TO DRAWING S6202 AND M4003 FOR MORE DETAIL ON THE FLOW SPLIT BOX.
2. REFER TO DRAWING S6200 AND M4001 FOR MORE DETAIL ON THE PUMP STATION.
3. NON FROST SUSCEPTIBLE FILL INCLUDES SOIL CLASSIFIED AS CL IN THE UNIFIED SOIL CLASSIFICATION SYSTEM WITH A PI >12 OR A POORLY GRADED SAND (SP) OR GRAVEL (GP) WITH LESS THAN 2% PASSING THE NO. 200.
4. REFER TO DRAWING S3107 FOR TAG F AND H COORDINATES.

LINE AND SHADING LEGEND

- 60 MIL. HDPE GEOMEMBRANE
- GEOTEXTILE CUSHION AND SEPARATION GEOTEXTILE
- TOPSOIL
- NATIVE SOIL
- GENERAL FILL
- CONCRETE
- GRAVEL SURFACE (NO. 24 CRUSHER RUN)
- FREE DRAINING FILL
- COMPACTED CLAY FILL
- DENSE AGGREGATE BASE

PUMP STATION CONCRETE SLAB LOCATION

I.D. NO.	NORTHING	EASTING	TOP OF CONC. ELEVATION	DESCRIPTION
51	3,476,220.22	11,424,004.57	365.17	CORNER OF CONCRETE SLAB
52	3,476,213.74	11,424,016.61	365.17	CORNER OF CONCRETE SLAB
53	3,476,247.38	11,424,019.00	362.50	CORNER OF CONCRETE SLAB
54	3,476,247.30	11,424,019.15	362.50	INTERSECTION OF RAMP & BASE
55	3,476,240.82	11,424,031.18	362.50	INTERSECTION OF RAMP & BASE
56	3,476,239.79	11,424,033.09	362.50	CORNER OF CONCRETE SLAB
57	3,476,250.65	11,424,038.94	362.50	CORNER OF CONCRETE SLAB
58	3,476,251.68	11,424,037.03	362.50	INTERSECTION OF RAMP & BASE
59	3,476,258.16	11,424,025.00	362.50	INTERSECTION OF RAMP & BASE
60	3,476,258.24	11,424,024.85	362.50	CORNER OF CONCRETE SLAB
61	3,476,285.23	11,424,039.57	365.17	CORNER OF CONCRETE SLAB
62	3,476,278.75	11,424,051.61	365.17	CORNER OF CONCRETE SLAB

NOTE: REFER TO PLAN SHEETS M4001,M4002 AND S6200 AND S6201 FOR DETAILS OF PUMP STATION.

COMMONWEALTH OF VIRGINIA
R. KENT NILSSON
Lic. No. 026477
11/16/16
PROFESSIONAL ENGINEER

Dominion TRC

POWER GENERATION ENGINEERING
RICHMOND, VIRGINIA

CIVIL DETAILS – NORTH AND SOUTH BASINS

RETROFIT – SLUDGE SEDIMENTATION BASINS
CLOVER, VIRGINIA

REV	DATE	DSGN	DRWN	CHKD	DSGN SUPV	PROJ ENGR	CIVIL ENGR	ELEC ENGR	MECH ENGR	ARCH	E.M. ENGR	I&C ENGR	REV	DATE	DSGN	DRWN	CHKD	DSGN SUPV	PROJ ENGR	CIVIL ENGR	ELEC ENGR	MECH ENGR	ARCH	E.M. ENGR	I&C ENGR	REV	DATE	DSGN	DRWN	CHKD	DSGN SUPV	PROJ ENGR	CIVIL ENGR	ELEC ENGR	MECH ENGR	ARCH	E.M. ENGR	I&C ENGR	REV	DATE	DSGN	DRWN	CHKD	DSGN SUPV	PROJ ENGR	CIVIL ENGR	ELEC ENGR	MECH ENGR	ARCH	E.M. ENGR	I&C ENGR
																									1	11 16 2016	DM	LLS	JNH		NA	RKN	CS	DS				0	04 08 2016	DM	LLS	JNH		NA	RKN	CS	DS			

REVISED LINER SYSTEM — ISSUED FOR BID

DSGN D.MARSHALL	DSGN SUPV	DATE NOVEMBER 2016 DGNSPEC FOR FILE VERIFICATION	
DRWN L. STORMER	ENGR SUPV	DRAWING NO. 66706–15348–CWSG–S3116	REV. 1
CHKD JH	PROJ ENGR		
DISPL ENGR ---	SCALE: AS NOTED	UNLESS OTHERWISE NOTED	SH 18 OF 41

DRAWING NAME: J:\Dominion Resources\Clover\22002 - Line Construction - RE\V00\00-22002-S3116.dwg – PLOT DATE: November 15, 2016 - 10:15AM – LAYOUT: 8D16-15348-CWSG-S3116

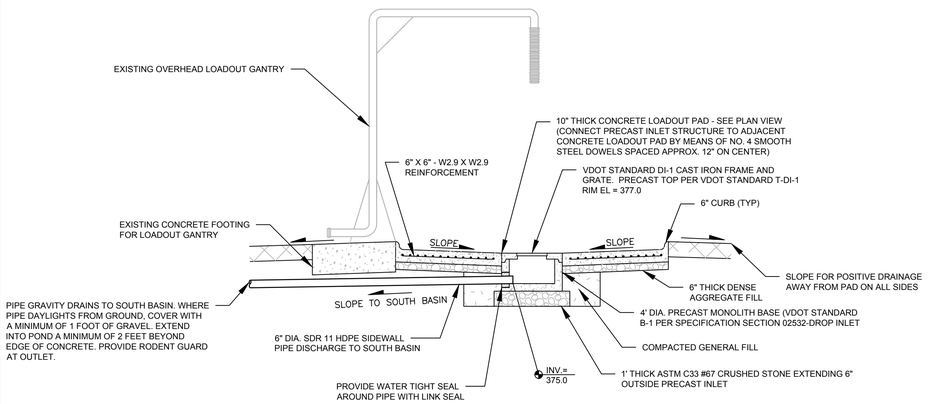

A S3117 **SECTION**

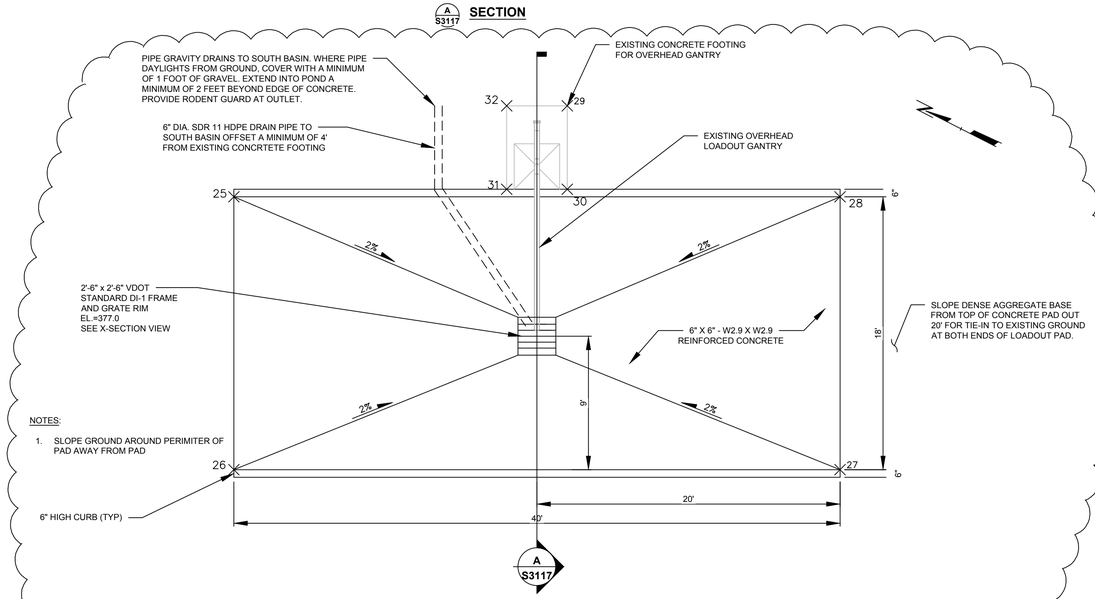

NOTES:

1. SLOPE GROUND AROUND PERIMITER OF PAD AWAY FROM PAD

1 S3117 **WATER TRUCK LOADOUT STATION DETAIL**

(SCALE: 1"=5')

REFERENCED ON SHEETS S3107, S3111, S3112

WATER TRUCK LOADOUT STATION COORDINATES AND ELEVATIONS

I.D. NO.	NORTHING	EASTING	ELEVATION	DESCRIPTION
25	3,476,069.72	11,423,830.77	376.44	CORNER LOADOUT PAD
26	3,476,053.62	11,423,822.72	376.44	CORNER LOADOUT PAD
27	3,476,035.74	11,423,858.50	376.44	CORNER LOADOUT PAD
28	3,476,051.84	11,423,866.55	376.44	CORNER LOADOUT PAD
29	3,476,064.90	11,423,853.60	376.00	CORNER TOP EXISTING CONCRETE FOOTING
30	3,476,060.10	11,423,851.30	376.00	CORNER TOP EXISTING CONCRETE FOOTING
31	3,476,062.40	11,426,846.50	376.00	CORNER TOP EXISTING CONCRETE FOOTING
32	3,476,067.20	11,423,848.90	376.00	CORNER TOP EXISTING CONCRETE FOOTING

NOTE: SEE LOCATION OF TRUCK LOADOUT STATION ON PLAN SHEET S3112

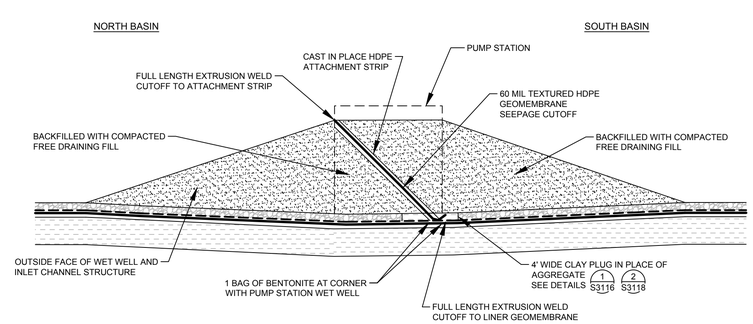

2 S3117 **GEOMEMBRANE SEEPAGE CUTOFF WALL (VIEW ALONG WEST WALL OF PUMP STATION)**

(NOT TO SCALE)

REFERENCED ON SHEET S3112

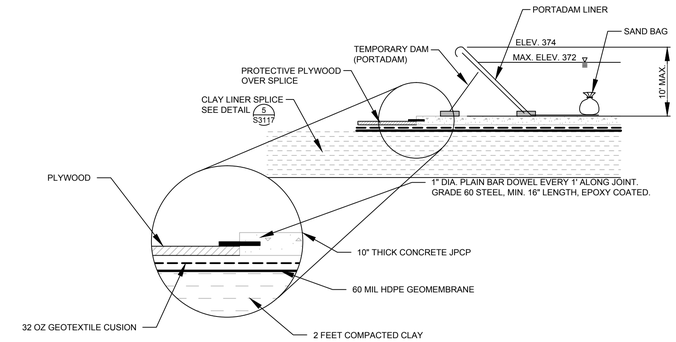

4 S3117 **TEMPORARY DAM DETAIL DURING SOUTH BASIN CONSTRUCTION**

(NOT TO SCALE)

REFERENCED ON SHEET S3105, S3108, S3109

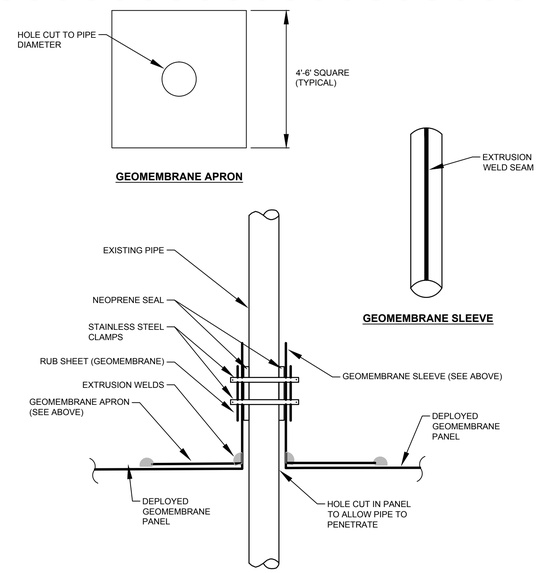

3 S3117 **FIELD FABRICATED PIPE BOOT**

(NOT TO SCALE)

NOTE: MANUFACTURER'S FACTORY FABRICATED PIPE BOOT MAY ALSO BE ACCEPTABLE AS APPROVED BY ENGINEER.

REFERENCED ON SHEET M4000 AND S3116

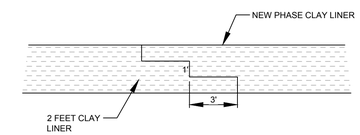

5 S3117 **CLAY LINER SPLICE**

(NOT TO SCALE)

REFERENCED ON SHEET S3117

1

LINE AND SHADING LEGEND

- 60 MIL. HDPE GEOMEMBRANE
- GEOTEXTILE CUSHION AND SEPARATION GEOTEXTILE
- TOPSOIL
- NATIVE SOIL
- GENERAL FILL
- CONCRETE
- GRAVEL SURFACE (NO. 24 CRUSHER RUN)
- FREE DRAINING FILL
- COMPACTED CLAY FILL
- DENSE AGGREGATE BASE

COMMONWEALTH OF VIRGINIA
R. KENT NILSSON
Lic. No. 026477
11/16/16
PROFESSIONAL ENGINEER

Dominion — TRC

POWER GENERATION ENGINEERING
RICHMOND, VIRGINIA

CIVIL DETAILS – NORTH AND SOUTH BASINS

RETROFIT – SLUDGE SEDIMENTATION BASINS
CLOVER, VIRGINIA

DSGN D.MARSHALL	DSGN SUPV	DATE NOVEMBER 2016 DGNSPEC FOR FILE VERIFICATION	
DRWN L. STORMER	ENGR SUPV	DRAWING NO.	REV.
CHKD JH	PROJ ENGR	66706-15348-CWSG-S3117	1
DISPL ENGR ---	SCALE: AS NOTED	UNLESS OTHERWISE NOTED	SH 19 OF 41

REV	DATE	DSGN	DRWN	CHKD	DSGN SUPV	PROJ ENGR	CIVIL ENGR	ELEC ENGR	MECH ENGR	ARCH	E.M. ENGR	I&C ENGR	REV	DATE	DSGN	DRWN	CHKD	DSGN SUPV	PROJ ENGR	CIVIL ENGR	ELEC ENGR	MECH ENGR	ARCH	E.M. ENGR	I&C ENGR	REV	DATE	DSGN	DRWN	CHKD	DSGN SUPV	PROJ ENGR	CIVIL ENGR	ELEC ENGR	MECH ENGR	ARCH	E.M. ENGR	I&C ENGR	REV	DATE	DSGN	DRWN	CHKD	DSGN SUPV	PROJ ENGR	CIVIL ENGR	ELEC ENGR	MECH ENGR	ARCH	E.M. ENGR	I&C ENGR
																										1	11 16 2016	DM	LLS	JNH		NA	RKN	CS	DS				0	04 08 2016	DM	LLS	JNH		NA	RKN	CS	DS			

DRAWING NAME: J:\Dominion Resources\Clover\32002 - Liner Construction - RE\W0000\32002.SHT\S3117.dwg – PLOT DATE: November 15, 2016 - 10:11AM – LAYOUT: 66706-15348-CWSG-S3117

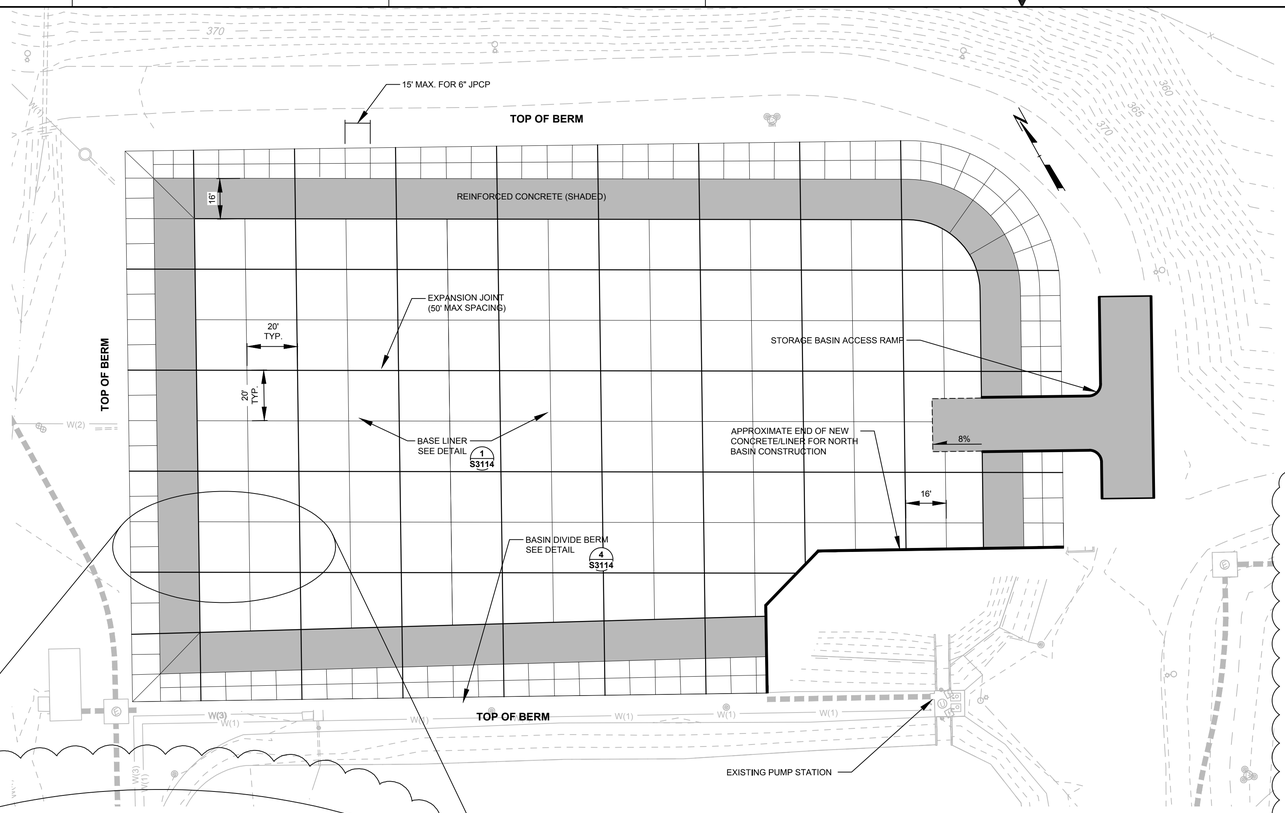

JOINTED PLAIN CONCRETE PAVEMENT AND REINFORCEMENT SLAB PATTERNS (TYPICAL NORTH AND SOUTH BASINS)

1 S3118

(NOT TO SCALE)

REFERENCED ON SHEETS S3109, S3110, S3112, S3113, S3114, S3115, S3116

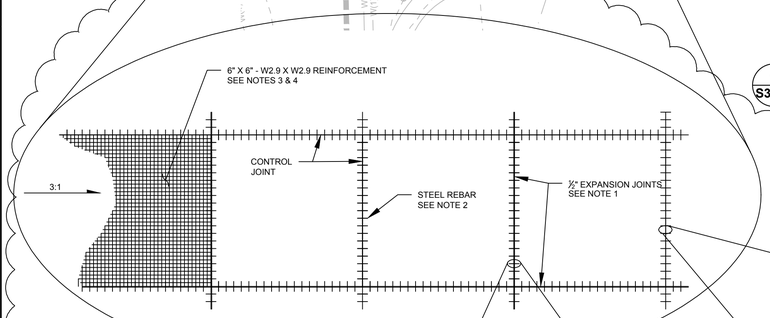

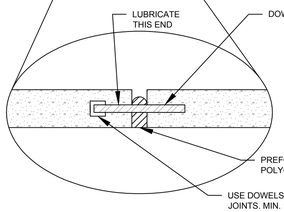

EXPANSION JOINTS

- THE EXPANSION JOINT FILLER SHALL BE DEPRESSED MIN. 1/2" BELOW THE SURFACE . THE EXPANSION FILLER SHALL BE HELD IN A VERTICAL POSITION

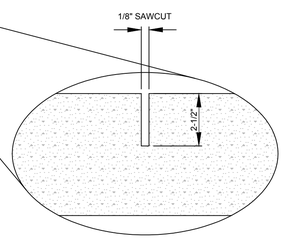

CONTROL JOINTS

- FORM OR CUT CONTROL JOINTS
- SECOND ¼" WIDE BY 1" DEEP MAY BE REQUIRED FOR JOINT SEALING

NOTES

1. THIS DETAIL IS MEANT TO PROVIDE THE PARAMETERS FOR WHICH EACH TYPE OF JOINT (I.E. EXPANSION OR CONTROL) MUST BE ORIENTED AND CONSTRUCTED. IT IS THE CONTRACTORS RESPONSIBILITY TO DETERMINE THE LOCATIONS OF EACH TYPE (I.E. JOINT PLACEMENT LAYOUT) BASED ON THESE PARAMETERS. A JOINT PLACEMENT LAYOUT SHALL BE SUBMITTED TO THE ENGINEER FOR APPROVAL PRIOR TO POURING CONCRETE.
2. TYPICAL SLAB DIMENSION IS 20' X 20' FOR 10" THICK JOINTED PLAIN CONCRETE. MAXIMUM SLAB DIMENSION IS 24 FEET FOR 10" THICK JPCP SLAB LENGTHS SHALL BE LESS THEN 1.25 TIMES THE SLAB WIDTH. FOR 6" THICK JPCP MAXIMUM SLAB DIMENSION IS 15 FEET. CUT OR FORM JOINTS. PROVIDE ½" THICK EXPANSION JOINTS EVERY 50 FEET.
3. PROVIDE 1" DIAMETER PLAIN BAR DOWEL EVERY 1' ALONG JOINTS. GRADE 60 STEEL, EPOXY-COATED, MIN. 16" LENGTH. DO NOT DOWEL 6" JPCP UPSLOPE OF REINFORCED CONCRETE.
4. FOR REINFORCED CONCRETE MAXIMUM LENGTH BETWEEN CONTRACTION JOINTS IS 40 FEET. ALIGN JOINTS OF REINFORCEDCONCRETE WITH JPCP.
5. PROVIDE REINFORCED CONCRETE FOR IRREGULAR SHAPED SLABS.
6. REFER TO NOTE 2 ON SHEET S3114 FOR JOINT SEALING REQUIREMENTS.

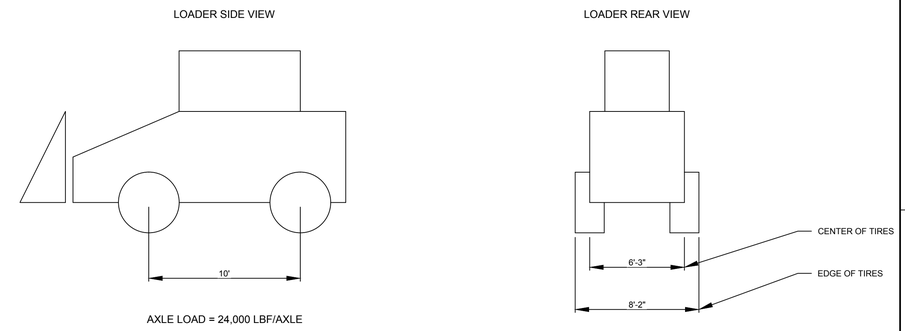

WHEEL LOADER LOADING DIAGRAM

3 S3118

(NOT TO SCALE)

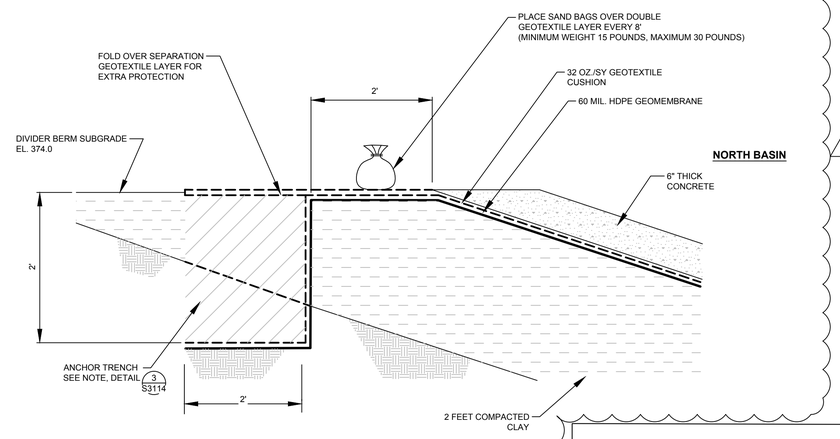

TEMPORARY COVER OVER ANCHOR TRENCH BETWEEN NORTH AND SOUTH BASINS

4 S3118

(NOT TO SCALE)

REFERENCED ON SHEET S3110

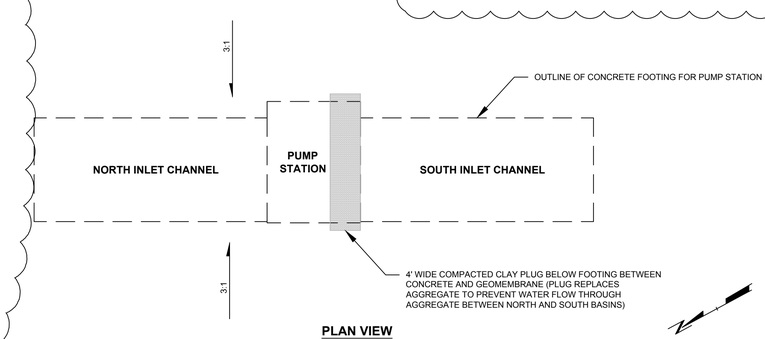

PLAN VIEW

LOCATION OF CLAY PLUG BELOW PUMP STATION

2 S3118

(SCALE: 1"=10')

REFERENCED ON SHEET S3116

LINE AND SHADING LEGEND

- 60 MIL. HDPE GEOMEMBRANE
- GEOTEXTILE CUSHION AND SEPARATION GEOTEXTILE
- TOPSOIL
- NATIVE SOIL
- GENERAL FILL
- CONCRETE
- GRAVEL SURFACE (NO. 24 CRUSHER RUN)
- COMPACTED CLAY FILL
- DENSE AGGREGATE BASE

COMMONWEALTH OF VIRGINIA
R. KENT NILSSON
Lic. No. 026477
11/16/16
PROFESSIONAL ENGINEER

Dominion

TRC

POWER GENERATION ENGINEERING
RICHMOND, VIRGINIA

CIVIL DETAILS

RETROFIT – SLUDGE SEDIMENTATION BASINS
CLOVER, VIRGINIA

REV	DATE	DSGN	DRWN	CHKD	DSGN SUPV	PROJ ENGR	CIVIL ENGR	ELEC ENGR	MECH ENGR	ARCH	E.M. ENGR	I&C ENGR
1	11 16 2016	DM	LLS	JNH		NA	RKN	CS	DS			
0	04 08 2016	DM	LLS	JNH		NA	RKN	CS	DS			

1 REVISED LINER SYSTEM

0 ISSUED FOR BID

DSGN D. MARSHALL	DSGN SUPV	DATE NOVEMBER 2016 DGNSPEC FOR FILE VERIFICATION	
DRWN L. STORMER	ENGR SUPV	DRAWING NO. 66706-15348-CWSG-S3118	REV. 1
CHKD JH	PROJ ENGR		
DISPL ENGR ---	SCALE: AS NOTED	UNLESS OTHERWISE NOTED	SH 20 OF 41

DRAWING NAME: J:\Dominion Resources\Clover\223002 - Liner Construction - RO\00000\223002.SHT\S3118.dwg – PLOT DATE: November 15, 2016 - 10:11AM – LAYOUT: 66706-15348-CWSG-S3118

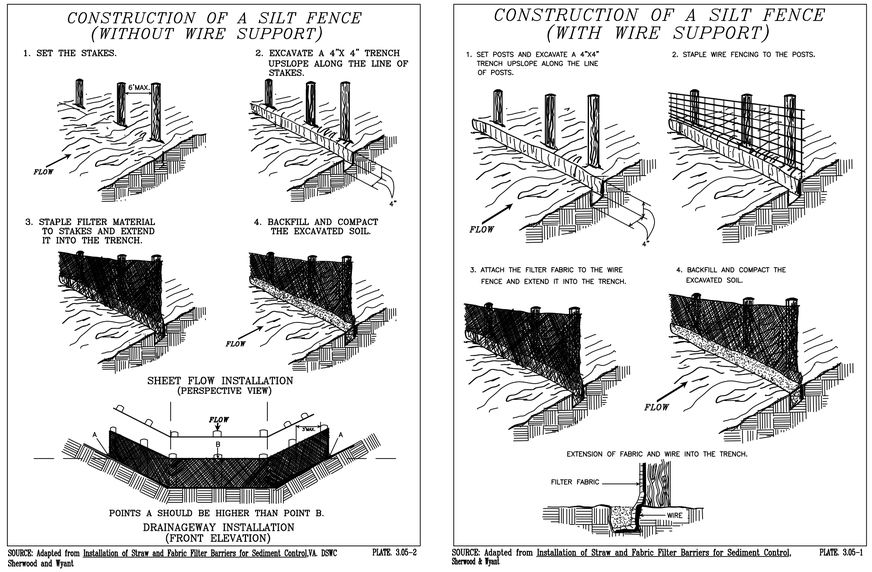

SOURCE: Adapted from Installation of Straw and Fabric Filter Barriers for Sediment Control,VA. DSWC Sherwood and Wyant PLATE. 3.05-2

SOURCE: Adapted from Installation of Straw and Fabric Filter Barriers for Sediment Control, Sherwood & Wyant PLATE. 3.05-1

1 S3119

SILT FENCE

(NOT TO SCALE)

REFERENCED ON SHEETS S3106

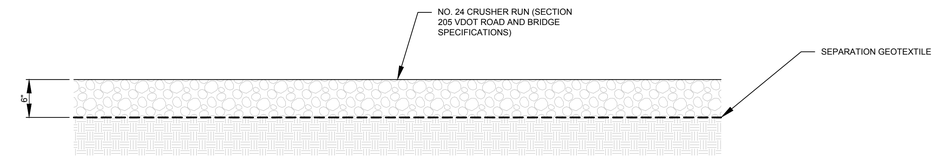

3 S3119

GRAVEL SURFACING

(NOT TO SCALE)

REFERENCED ON SHEETS S3106, S3109, AND S3112

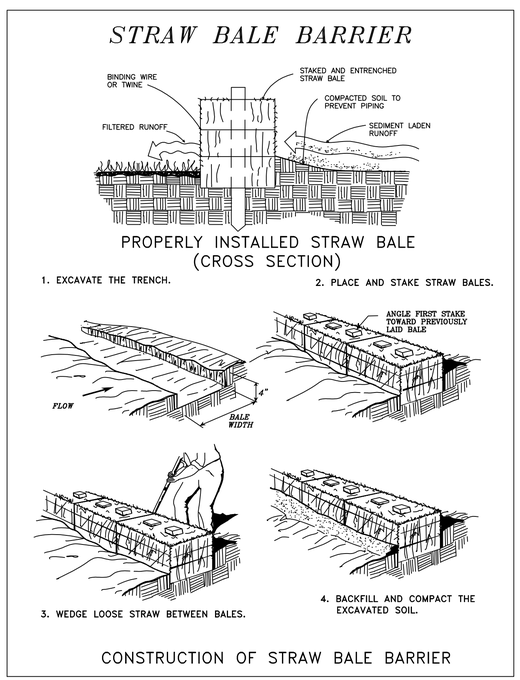

SOURCE: VA. DSWC PLATE. 3.04-1

2 S3119

STRAW BALE BARRIER

(NOT TO SCALE)

REFERENCED ON SHEETS S3106

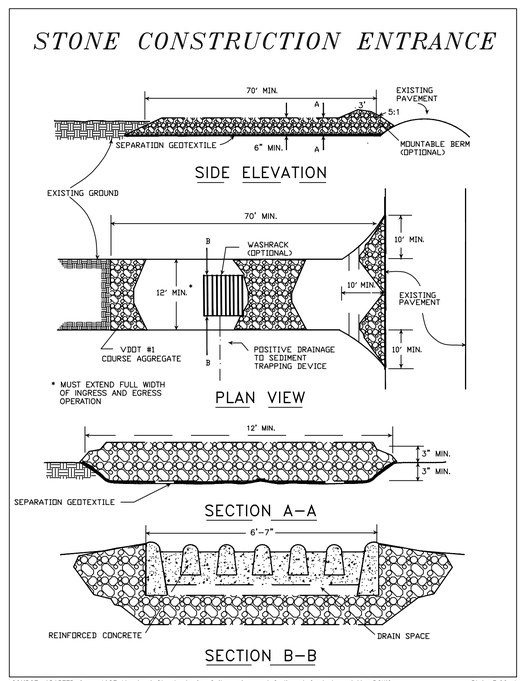

SOURCE: ADAPTED from 1983 Maryland Standards for Soil erosion and Sediment Control, and Va. DSWC Plate 3.02-1

4 S3119

STONE CONSTRUCTION ENTRANCE

(NOT TO SCALE)

REFERENCED ON SHEETS S3106

LINE AND SHADING LEGEND

- 60 MIL. HDPE GEOMEMBRANE
- GEOTEXTILE CUSHION AND SEPARATION GEOTEXTILE
- TOPSOIL
- NATIVE SOIL
- GENERAL FILL
- CONCRETE
- GRAVEL SURFACE (NO. 24 CRUSHER RUN)
- COMPACTED CLAY FILL
- DENSE AGGREGATE BASE

Dominion

TRC

POWER GENERATION ENGINEERING
RICHMOND, VIRGINIA

CIVIL DETAILS – EROSION AND SEDIMENT CONTROL

RETROFIT – SLUDGE SEDIMENTATION BASINS
CLOVER, VIRGINIA

REV	DATE	DSGN	DRWN	CHKD	DSGN SUPV	PROJ ENGR	CIVIL ENGR	ELEC ENGR	MECH ENGR	ARCH	E.M. ENGR	I&C ENGR
1	11 16 2016	DM	LLS	JNH		NA	RKN	CS	DS			
0	04 08 2016	DM	LLS	JNH		NA	RKN	CS	DS			

1 REVISED LINER SYSTEM

0 ISSUED FOR BID

DSGN D.MARSHALL	DSGN SUPV	DATE NOVEMBER 2016 DGNSPEC FOR FILE VERIFICATION	
DRWN L. STORMER	ENGR SUPV	DRAWING NO. 66706-15348-CWSG-S3119	REV. 1
CHKD JH	PROJ ENGR		
DISPL ENGR ---	SCALE: AS NOTED	UNLESS OTHERWISE NOTED	SH 21 OF 40

DRAWING NAME: J:\Dominion Resources\Clover\23002_Line Construction - RE\V00\0041 22002.dwg - PLOT DATE: November 15, 2016 - 10:11AM - LAYOUT: 66706-15348-CWSG-S3119

LINE LIST:

LINE ID	DESC	DIA	PIPE MATERIAL	WORKING PRESSURE	DESIGN PRESSURE	TEST PRESSURE	TEMP	MATERIAL PUMPED
	FROM COAL POND TO SOUTH SLUDGE POND	6	HDPE	50 PSI	100 PSI	150 PSI	90-110 F	WATER
WWC-A	FROM CHEMICAL WASTE	8	HDPE	50 PSI	100 PSI	150 PSI	125 F	WASTEWATER
DPB-B	RECLAIM TANK BLOWDOWN	8	HDPE	70 PSI	100 PSI	150 PSI	110 F	RECLAIMED WATER
DPB-C	AQC BLDG SUMP PUMP DISCH	8	HDPE	60 PSI	100 PSI	150 PSI	110 F	WATER
WSG-D	SLUDGE STORAGE POND PUMP DISCHARGE (ABOVE GROUND)	4/6	DI	50 PSI	100 PSI	150 PSI	120 F	WATER
WSG-D	SLUDGE STORAGE POND PUMP DISCHARGE (BURIED)	8	HDPE	50 PSI	100 PSI	150 PSI	120 F	WATER

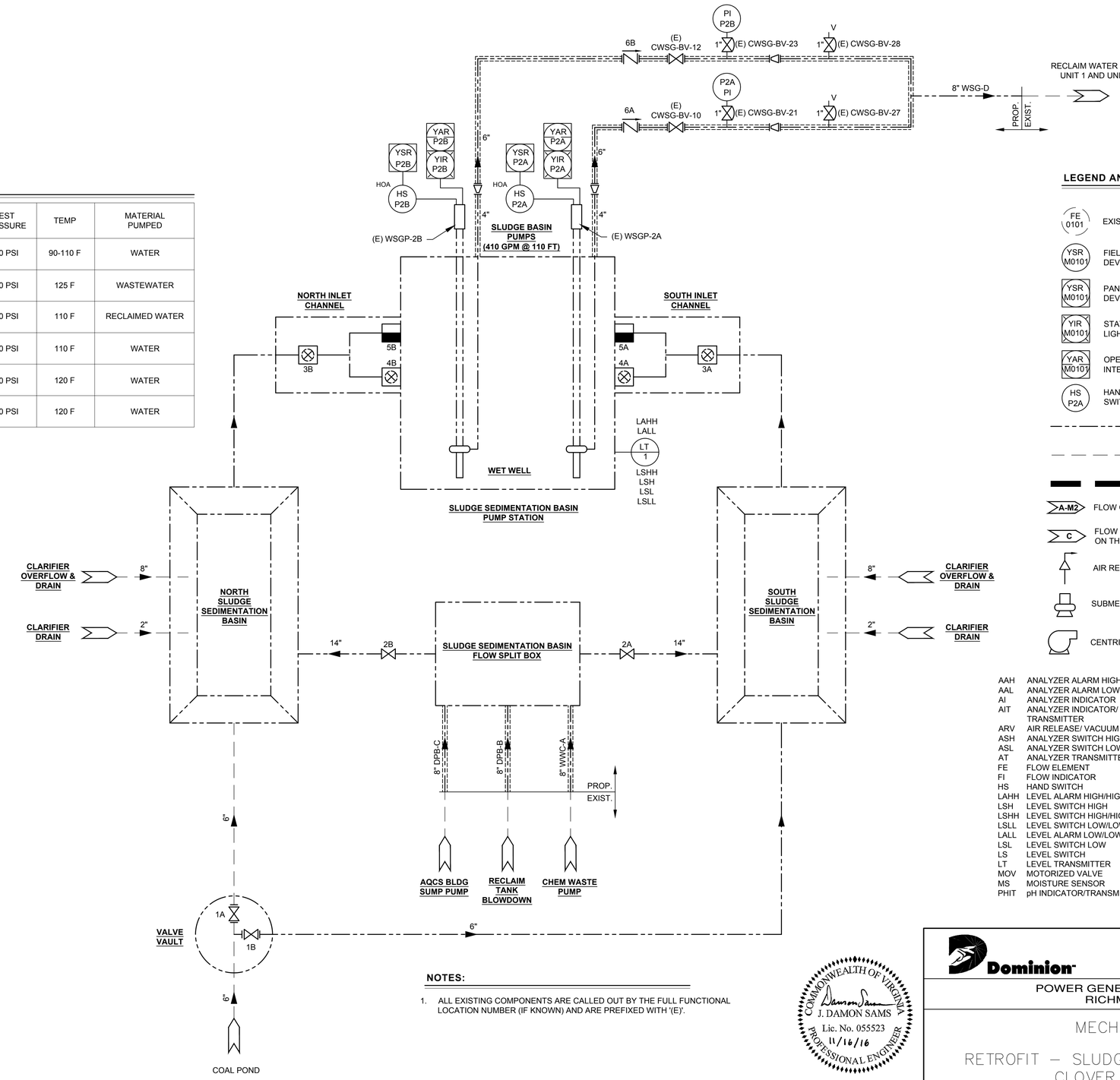

LEGEND AND ABBREVIATIONS

FE 0101	EXISTING DEVICE		BUTTERFLY VALVE
YSR M0101	FIELD LOCATED DEVICE	M	MOTORIZED PLUG VALVE
YSR M0101	PANEL MOUNTED DEVICE		CHECK VALVE
YIR M0101	STATUS INDICATOR LIGHT		DIRECTION OF FLOW
YAR M0101	OPERATOR INTERFACE		CAP OR PLUG
HS P2A	HAND-OFF-AUTO SWITCH		REDUCER
	PROPOSED PROCESS	M	MIXER
	EXISTING PROCESS		SLIDE GATE
	BUILDING LIMITS		BALL VALVE
A-M2	FLOW CONTINUATION		GATE VALVE
C	FLOW CONTINUATION ON THIS SHEET		PLUG VALVE
	AIR RELEASE VALVE		DIAPHRAGM VALVE
	SUBMERSIBLE PUMP		WEIR GATE
	CENTRIFUGAL PUMP		MANHOLE
			JACKETED PIPE

AAH	ANALYZER ALARM HIGH	PI	PRESSURE INDICATOR
AAL	ANALYZER ALARM LOW	PIV	PRESSURE INDICATOR-VACUUM
AI	ANALYZER INDICATOR	PSV	PRESSURE SAFETY VALVE
AIT	ANALYZER INDICATOR/ TRANSMITTER	TAH	TEMP. ALARM HIGH
		TI	TEMP. INDICATE
ARV	AIR RELEASE/ VACUUM VALVE	TSH	TEMP. SWITCH HIGH
ASH	ANALYZER SWITCH HIGH	TSL	TEMP. SWITCH LOW
ASL	ANALYZER SWITCH LOW	VI	VACUUM INDICATOR
AT	ANALYZER TRANSMITTER	VT	VACUUM TRANSMITTER
FE	FLOW ELEMENT	YA	STATUS ALARM
FI	FLOW INDICATOR	YAR	STATUS ALARM RUN
HS	HAND SWITCH	YAS	STATUS ALARM STOP
LAHH	LEVEL ALARM HIGH/HIGH	YIC	STATUS INDICATE CLOSE
LSH	LEVEL SWITCH HIGH	YIO	STATUS INDICATE OPEN
LSHH	LEVEL SWITCH HIGH/HIGH	YIR	STATUS INDICATE RUN
LSLL	LEVEL SWITCH LOW/LOW	YIS	STATUS INDICATE STOP
LALL	LEVEL ALARM LOW/LOW	YSR	STATUS SWITCH RUN
LSL	LEVEL SWITCH LOW	ZA	POSITION ALARM
LS	LEVEL SWITCH	ZAC	POSITION ALARM CLOSE
LT	LEVEL TRANSMITTER	ZAO	POSITION ALARM OPEN
MOV	MOTORIZED VALVE	ZIC	POSITION INDICATE CLOSE
MS	MOISTURE SENSOR	ZIO	POSITION INDICATE OPEN
PHIT	pH INDICATOR/TRANSMITTER	ZSC	POSITION SWITCH CLOSE
		ZSO	POSITION SWITCH OPEN

NOTES:

1. ALL EXISTING COMPONENTS ARE CALLED OUT BY THE FULL FUNCTIONAL LOCATION NUMBER (IF KNOWN) AND ARE PREFIXED WITH '(E)'.

COMMONWEALTH OF VIRGINIA
J. DAMON SAMS
Lic. No. 055523
11/16/16
PROFESSIONAL ENGINEER

Dominion
TRC

POWER GENERATION ENGINEERING
RICHMOND, VIRGINIA

MECHANICAL P&ID

RETROFIT – SLUDGE SEDIMENTATION BASINS
CLOVER POWER STATION

DSGN	DSAMS	DSGN SUPV	DATE APRIL 2016 DGNSPEC FOR FILE VERIFICATION
DRWN	DSAMS	ENGR SUPV	DRAWING NO. 66706-15348-CWSG-M2647 REV. 1
CHKD	CBELL	PROJ ENGR	
DISPL ENGR	XXX	SCALE: AS NOTED	UNLESS OTHERWISE NOTED SH 22 OF 41

REV	DATE	DSGN	DRWN	CHKD	DSGN SUPV	PROJ ENGR	CIVIL ENGR	ELEC ENGR	MECH ENGR	ARCH	E.M. ENGR	I&C ENGR
1	11 04 2016	JDS	TRC	HCB	NA	NA	RKN	CS	DS			
0	04 08 2016	JDS	TRC	HCB		NA	RKN	CS	DS			

1 REVISED LINER SYSTEM

0 ISSUED FOR BID

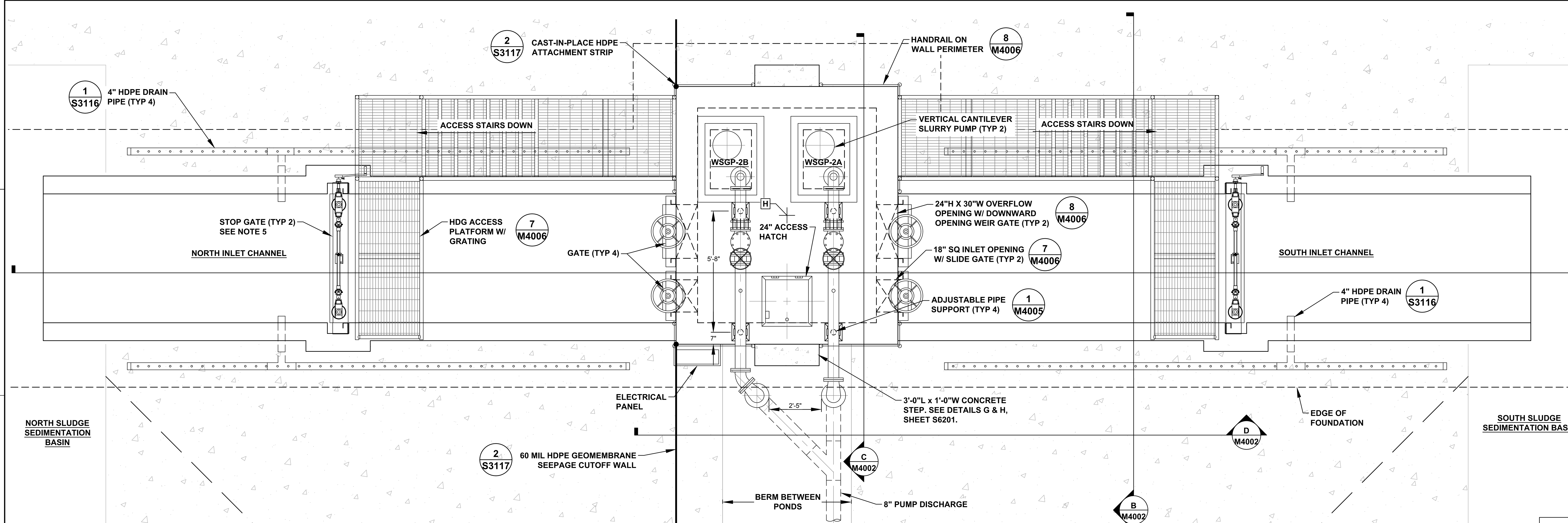

PUMP STATION PLAN VIEW

SCALE: 3/8" = 1'-0"

NAD83 CONSTRUCTION COORDINATES			
TAG	OBJECT (CENTERLINE)	NORTHING	EASTING
H	PUMP STATION	3476249.01	11424029.00

NOTES:

1. THIS DIMENSION TO BE CONFIRMED BY PUMP MANUFACTURER.
2. ALL ABOVE GROUND PIPE SHALL BE HEAT TRACED AND INSULATED.
3. ALL GATES, GATE COMPONENTS, AND MOUNTING HARDWARE SHALL BE TYPE 316SS. WHEEL OPERATORS SHALL BE PROVIDED WITH PADLOCK HASPS SO THEY ARE LOCKABLE.
4. PROVIDE TYPE 316SS TAGS FOR ALL VALVES, GATES & EQUIPMENT, MATCHING THE EXISTING IDENTIFICATION CODES/NUMBERS.

EQUIPMENT SCHEDULE			
EQUIPMENT	QTY	DETAILS	MANUFACTURER REFERENCE DRAWING
SLUDGE PUMP	2.00	LAWRENCE PUMPS MODEL VPL3200	D47962
ACCESS HATCH	1.00	BILCO TYPE J-AL 24" x 24" ALUMINUM CHANNEL FRAME DOOR. FLUSH WITH TOP OF CONCRETE. PROVIDE PADLOCK HASP & FALL PROTECTION GRATING SYSTEM	J-1AL
OVERFLOW WEIR GATE	2.00	FONTAINE 24"H x 30"W SERIES 40 WALL MOUNTED WEIR GATE. CONSTRUCTED OF 316SS	DWG-403-SERIES-40-SS-WEIRGATE
SLIDE GATE	2.00	FONTAINE 18" x 18" SERIES 20 WALL MOUNTED SLUICE GATE. CONSTRUCTED OF 316SS	DWG-203-SERIES-20-SS-SLUICE-GATE
CHANNEL STOP GATE	2.00	FONTAINE 72" x 72" SERIES 25 DUAL-STEM EMBEDDED FRAME STOP GATE. CONSTRUCTED OF 316SS	DWG-253-SERIES-25-SS-STOPGATE

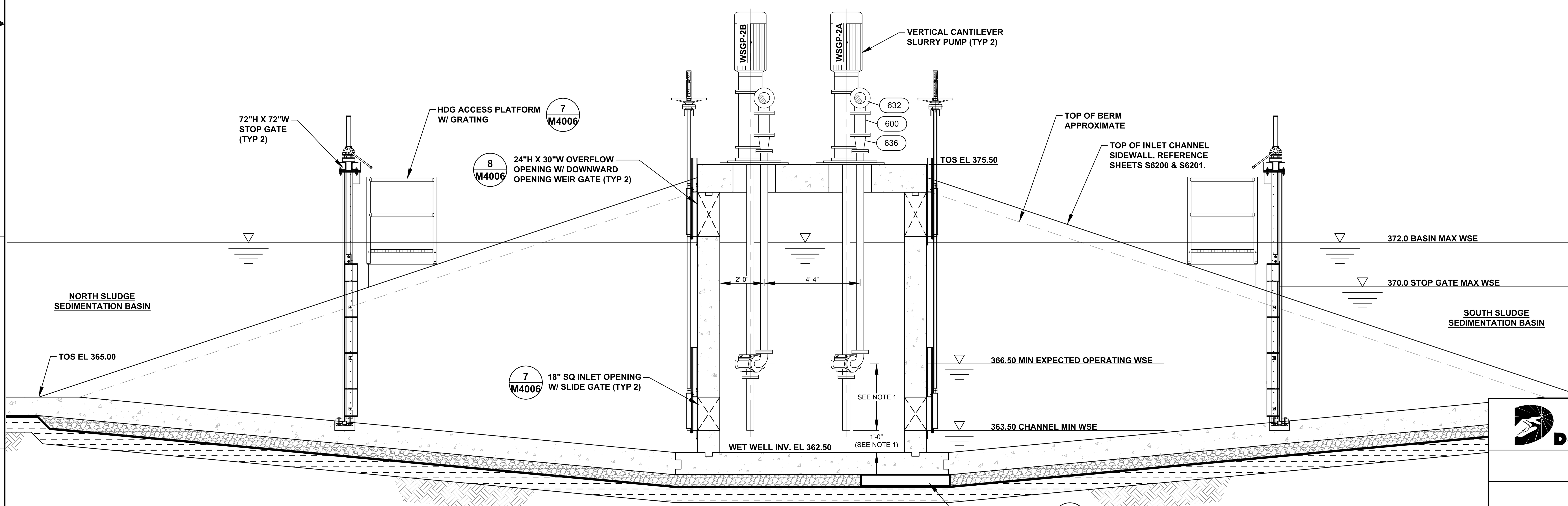

SECTION A M4001

SCALE: 3/8" = 1'-0"

COMMONWEALTH OF VIRGINIA — J. DAMON SAMS — Lic. No. 055523 — 11/16/16 — PROFESSIONAL ENGINEER

Dominion — TRC

POWER GENERATION ENGINEERING
RICHMOND, VIRGINIA

PUMP STATION PLAN VIEW

RETROFIT – SLUDGE SEDIMENTATION BASINS
CLOVER POWER STATION

REV	DATE	DESCRIPTION	DSGN	DRWN	CHKD	DSGN SUPV	PROJ ENGR	CIVIL ENGR	ELEC ENGR	MECH ENGR	ARCH	E.M. ENGR	I&C ENGR
1	11 04 2016	REVISED LINER SYSTEM	JDS	TRC	HCB	NA	NA	RKN	CS	DS			
0	04 08 2016	ISSUED FOR BID	JDS	TRC	HCB		NA	RKN	CS	DS			

DSGN DSAMS	DSGN SUPV	DATE APRIL 2016 DGNSPEC FOR FILE VERIFICATION	
DRWN DSAMS	ENGR SUPV	DRAWING NO. 66706–15348–CWSG–M4001	REV. 1
CHKD CBELL	PROJ ENGR		
DISPL ENGR XXX	SCALE: AS NOTED	UNLESS OTHERWISE NOTED	SH 23 OF 41

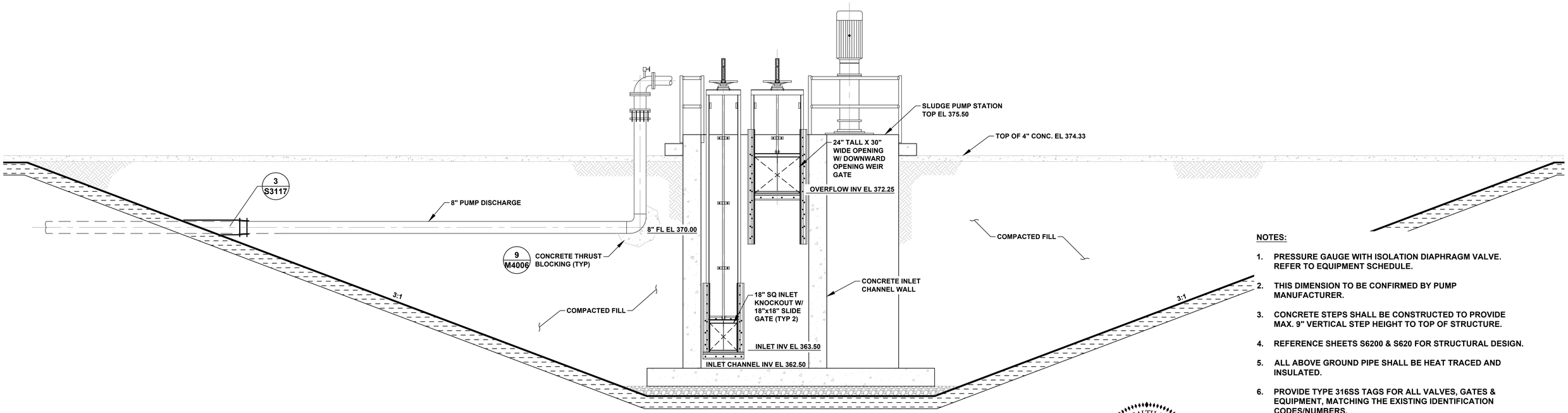

B M4002 **SECTION - PUMP STATION STRUCTURE**

SCALE: 3/8" = 1'-0"

REFERENCED ON SHEET M4001

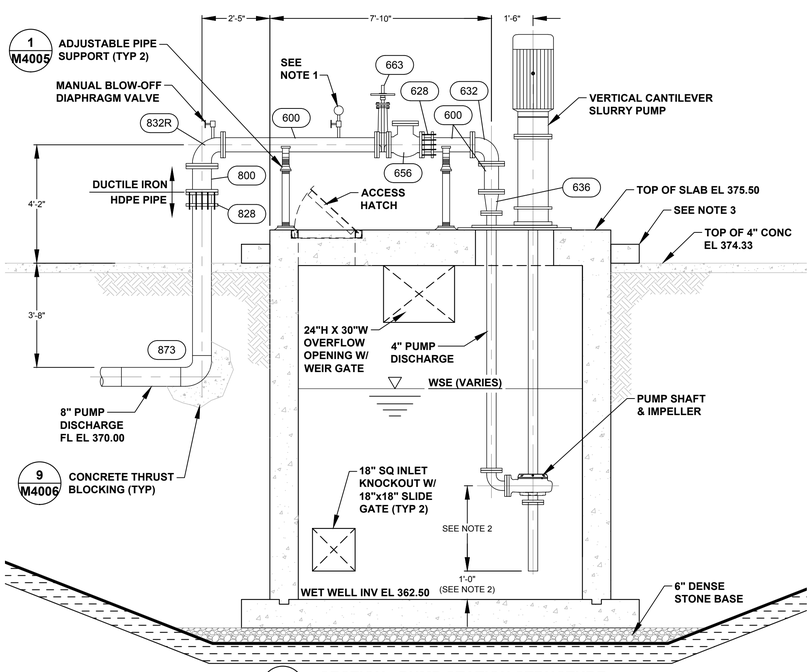

C M4002 **SECTION - PUMP STATION STRUCTURE**

SCALE: 3/8" = 1'-0"

REFERENCED ON SHEET M4001

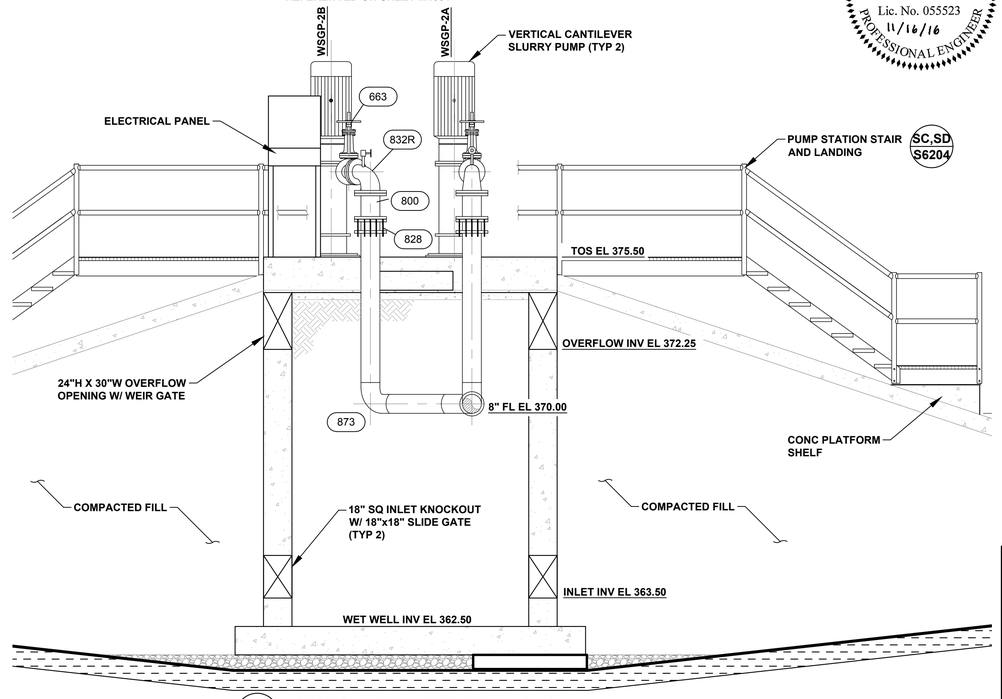

D M4002 **SECTION - BERM BETWEEN BASINS**

SCALE: 3/8" = 1'-0"

REFERENCED ON SHEET M4001

COMMONWEALTH OF VIRGINIA
J. DAMON SAMS
Lic. No. 055523
11/16/16
PROFESSIONAL ENGINEER

NOTES:

1. PRESSURE GAUGE WITH ISOLATION DIAPHRAGM VALVE. REFER TO EQUIPMENT SCHEDULE.
2. THIS DIMENSION TO BE CONFIRMED BY PUMP MANUFACTURER.
3. CONCRETE STEPS SHALL BE CONSTRUCTED TO PROVIDE MAX. 9" VERTICAL STEP HEIGHT TO TOP OF STRUCTURE.
4. REFERENCE SHEETS S6200 & S620 FOR STRUCTURAL DESIGN.
5. ALL ABOVE GROUND PIPE SHALL BE HEAT TRACED AND INSULATED.
6. PROVIDE TYPE 316SS TAGS FOR ALL VALVES, GATES & EQUIPMENT, MATCHING THE EXISTING IDENTIFICATION CODES/NUMBERS.

EQUIPMENT SCHEDULE

EQUIPMENT	QTY	DETAILS	MANUFACTURER REFERENCE DRAWING
SLUDGE PUMP	2.00	LAWRENCE PUMPS MODEL VPL3200	D47962
ACCESS HATCH	1.00	BILCO TYPE J-AL 24" x 24" ALUMINUM CHANNEL FRAME DOOR. FLUSH WITH TOP OF CONCRETE. PROVIDE PADLOCK HASP & FALL PROTECTION GRATING	J-1AL
OVERFLOW WEIR GATE	2.00	FONTAINE 24"H x 30"W SERIES 40 WALL MOUNTED WEIR GATE. CONSTRUCTED OF 316SS	DWG-403-SERIES-40-SS -WEIRGATE
SLIDE GATE	2.00	FONTAINE 18" x 18" SERIES 20 WALL MOUNTED SLUICE GATE. CONSTRUCTED OF 316SS	DWG-203-SERIES-20-SS -SLUICE-GATE
CHECK VALVE	2.00	GA INDUSTRIES 6" FIGURE 340-W SWING CHECK VALVE. EPOXY COATED IRON BODY. 316SS BODY SEAT, SHAFT & KEY. RESILIENT SEATED.	C-1366 REV. A
KNIFE GATE VALVE	2.00	CLARKSON 6" MODEL KGA10. EPOXY COATED IRON BODY. 316SS STEM & GATE, NATURAL RUBBER SLEEVES, 100PSI WORKING PRESSURE.	CLKMC-0113-5-13
DIAPHRAGM VALVE	4.00	SAUNDERS 1" A-TYPE (WEIR) VALVE WITH NATURAL RUBBER DIAPHRAGM, CAST IRON BODY WITH RUBBER LINING.	IDV336555
PRESSURE GAUGE	2.00	ASHCROFT 1279 DURAGAUGE. 0-100 PSI RANGE. EPOXY COATED, SUITABLE FOR MATERIAL PUMPED	DURAGAUGE-45-1279-0 2b

Dominion TRC

POWER GENERATION ENGINEERING
RICHMOND, VIRGINIA

PUMP STATION SECTION VIEWS

RETROFIT – SLUDGE SEDIMENTATION BASINS
CLOVER POWER STATION

DSGN	DSAMS	DSGN SUPV	DATE APRIL 2016 DGNSPEC FOR FILE VERIFICATION
DRWN	DSAMS	ENGR SUPV	DRAWING NO. 66706-15348-CWSG-M4002 REV. 1
CHKD	CBELL	PROJ ENGR	
DISPL ENGR	XXX	SCALE: AS NOTED	UNLESS OTHERWISE NOTED SH 24 OF 41

REV	DATE	DSGN	DRWN	CHKD	DSGN SUPV	PROJ ENGR	CIVIL ENGR	ELEC ENGR	MECH ENGR	ARCH	E.M. ENGR	I&C ENGR
1	11 04 2016	JDS	TRC	HCB	NA	NA	RKN	CS	DS			
0	04 08 2016	JDS	TRC	HCB		NA	RKN	CS	DS			

1 REVISED LINER SYSTEM

0 ISSUED FOR BID

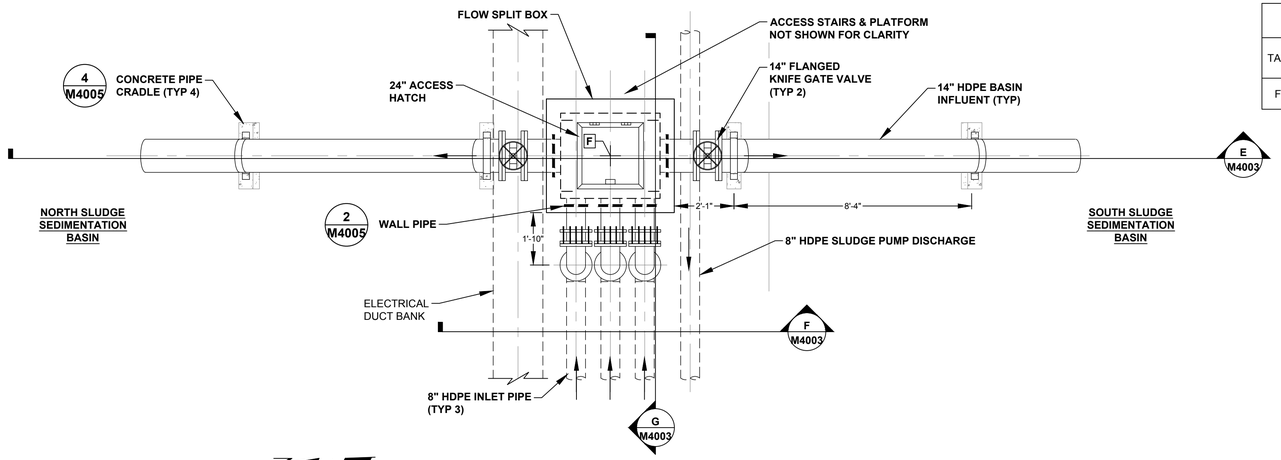

FLOW SPLIT BOX PLAN VIEW

SCALE: 3/8" = 1'-0"

NAD83 CONSTRUCTION COORDINATES			
TAG	OBJECT (CENTERLINE)	NORTHING	EASTING
F	FLOW SPLIT BOX	3476364.65	11423811.46

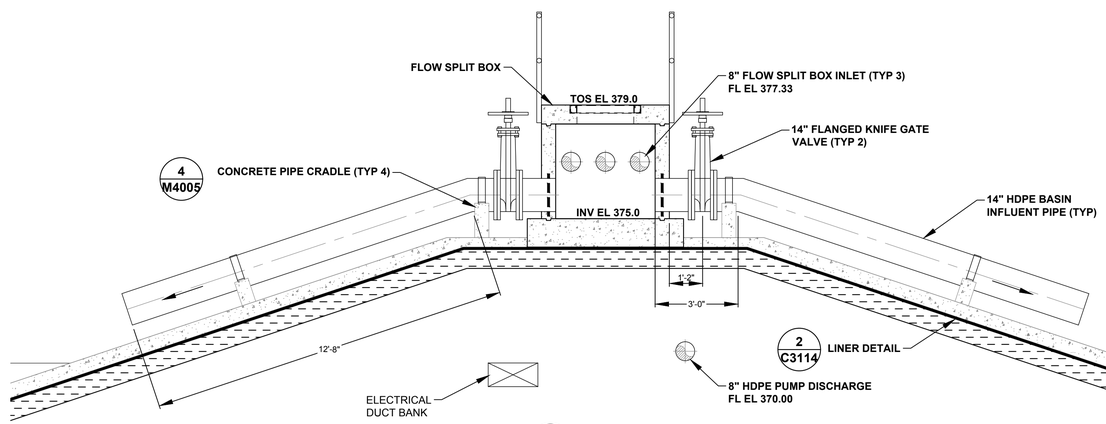

E M4003 SECTION

SCALE: 3/8" = 1'-0"

NOTES:

1. EXACT LOCATION/DEPTH OF EXISTING ELECTRICAL CONDUIT IS UNKNOWN. CONTRACTOR TO FIELD VERIFY PRIOR TO CONSTRUCTION.
2. PROVIDE TYPE 316SS TAGS FOR ALL VALVES, GATES & EQUIPMENT, MATCHING THE EXISTING IDENTIFICATION CODES/NUMBERS.
3. TOP OF PLATFORM GRATING TO BE CONSTRUCTED FLUSH WITH TOP OF FLOW SPLIT BOX CONCRETE.
4. REFERENCE SHEET S6202, S6204 FOR STRUCTURAL DESIGN.

EQUIPMENT SCHEDULE			
EQUIPMENT	QTY	DETAILS	MANUFACTURER REFERENCE DRAWING
ACCESS HATCH	1.00	BILCO TYPE J-AL 24" x 24" ALUMINUM CHANNEL FRAME DOOR. FLUSH WITH TOP OF CONCRETE. PROVIDE PADLOCK HASP	J-1AL
KNIFE GATE VALVE	2.00	CLARKSON 14" MODEL KGA10. EPOXY COATED IRON BODY. 316SS STEM & GATE, NATURAL RUBBER SLEEVES, 100PSI WORKING PRESSURE.	CLKMC-0113-5-13

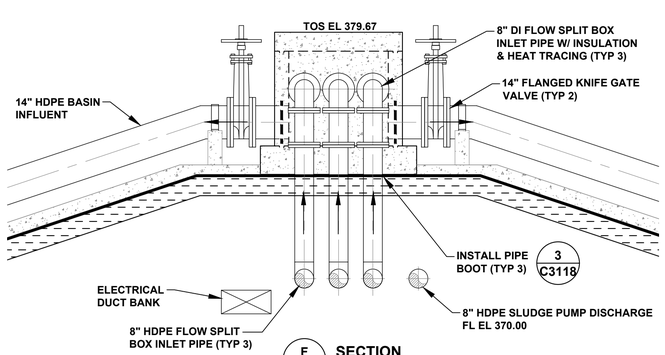

F M4003 SECTION

SCALE: 3/8" = 1'-0"

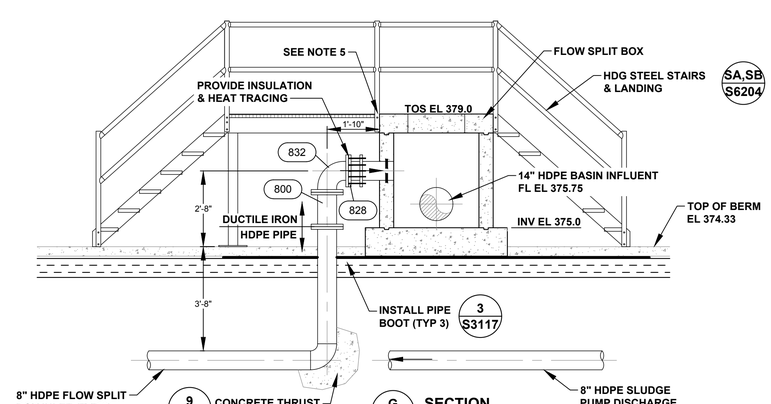

G M4003 SECTION

SCALE: 3/8" = 1'-0"

COMMONWEALTH OF VIRGINIA
J. DAMON SAMS
Lic. No. 055523
11/16/16
PROFESSIONAL ENGINEER

Dominion TRC

POWER GENERATION ENGINEERING
RICHMOND, VIRGINIA

FLOW SPLIT BOX PLAN & SECTIONS

RETROFIT – SLUDGE SEDIMENTATION BASINS
CLOVER POWER STATION

REV	DATE	DSGN	DRWN	CHKD	DSGN SUPV	PROJ ENGR	CIVIL ENGR	ELEC ENGR	MECH ENGR	ARCH	E.M. ENGR	I&C ENGR
1	11 04 2016	JDS	TRC	HCB	NA	NA	RKN	CS	DS			
0	04 08 2016	JDS	TRC	HCB		NA	RKN	CS	DS			

DSGN	DSAMS	DSGN SUPV	DATE APRIL 2016 DGNSPEC FOR FILE VERIFICATION
DRWN	DSAMS	ENGR SUPV	DRAWING NO. 66706-15348-CWSG-M4003
CHKD	CBELL	PROJ ENGR	REV. 1
DISPL ENGR	XXX	SCALE: AS NOTED	UNLESS OTHERWISE NOTED

NAD83 CONSTRUCTION COORDINATES			
TAG	OBJECT (CENTERLINE)	NORTHING	EASTING
J	TEMPORARY PUMP STATION	3476274.90	11424122.20

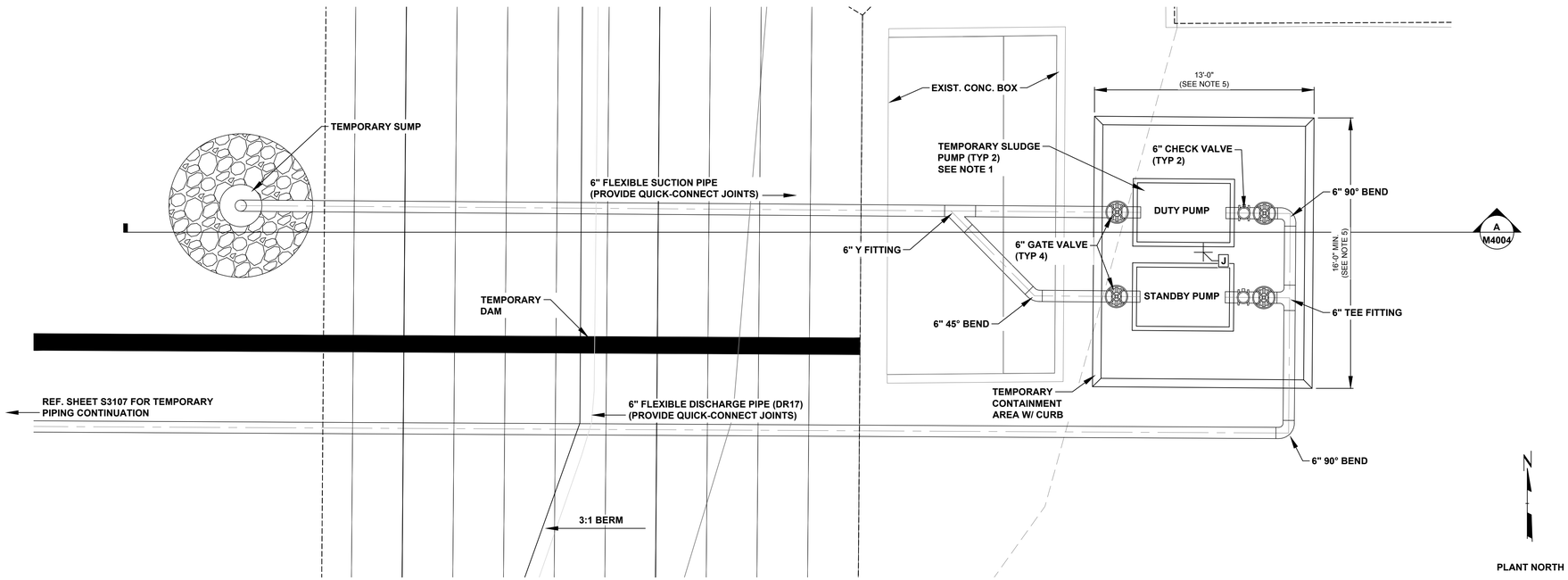

TEMPORARY PUMP STATION PLAN VIEW

SCALE: 1/4" = 1'-0"

NOTES:

1. TEMPORARY PUMPS SHALL BE ELECTRIC MOTOR OPERATED SELF-PRIMING PUMPS CAPABLE OF HANDLING SOLIDS AND ABRASIVES, MODEL PP44 AS MANUFACTURED BY PIONEER PUMP OR APPROVED EQUAL. EACH TEMPORARY PUMP SHALL BE CAPABLE OF DISCHARGING AT LEAST 400 GALLONS PER MINUTE.
2. TEMPORARY PIPE MUST HAVE RATED WORKING, BURSTING, & VACUUM PRESSURES APPLICABLE FOR USE WITH THE SELECTED TEMPORARY PUMPS. PIPE MUST ALSO BE CAPABLE OF CONVEYING SOLIDS AND ABRASIVE MATERIALS.
3. PROVIDE 4"x6" REDUCER FITTINGS ON SUCTION AND DISCHARGE ENDS OF PUMP. FITTINGS SHALL BE QUICK-CONNECT CAM-LOCK STYLE WITHIN LINED BASIN AREA AND BUTT-WELDED OUTSIDE OF BASIN AREA.
4. PROVIDE SUPPORTS/ANCHORS AS NEEDED FOR FLEXIBLE SUCTION AND DISCHARGE PIPING.
5. CONTRACTOR TO VERIFY CONTAINMENT SIZE BASED ON PROPOSED PUMP SIZE/DIMENSIONS. ISOLATION VALVES SHALL BE LOCATED WITHIN CONTAINMENT AREA AS SHOWN.
6. TEMPORARY DAM TO BE CONSTRUCTED ON TOP OF CONCRETE BASIN LINER. THE LINER SHALL EXTEND A MINIMUM OF 10 FEET BEYOND THE TEMPORARY DAM. LINER SHALL BE SPLICED AS SHOWN IN DETAIL 4, SHEET C3117.

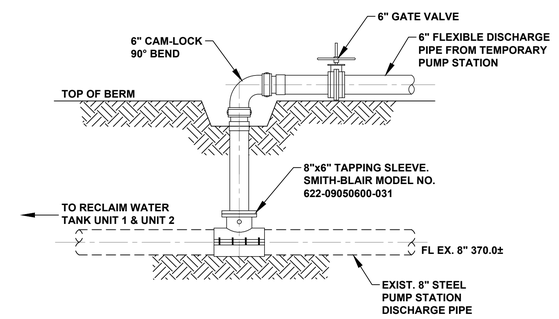

1 M4004 **CONNECTION TO EXISTING PIPE DETAIL**

SCALE: 1/2" = 1'-0"

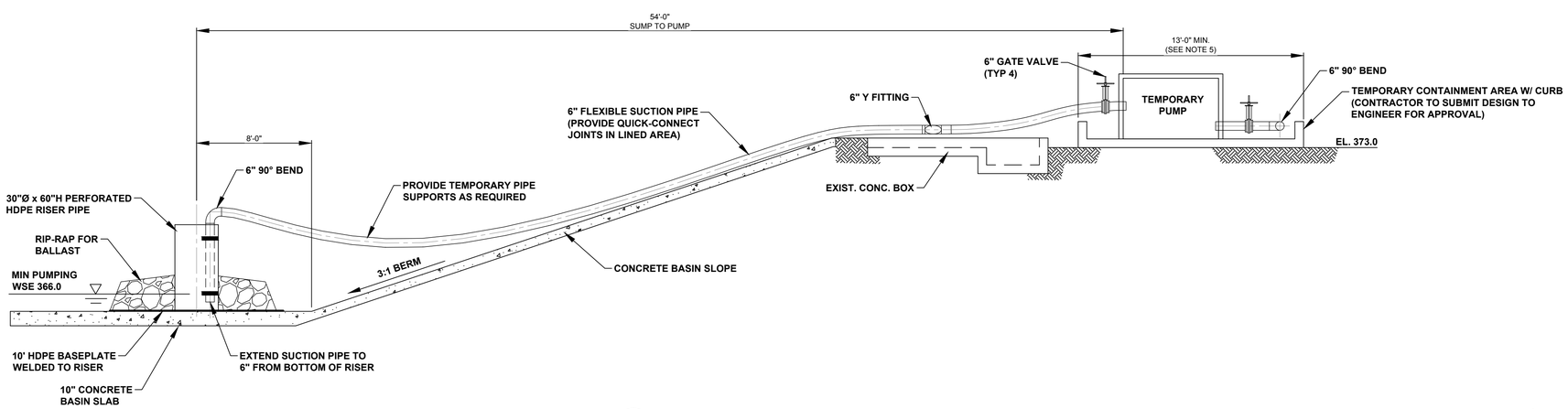

A M4004 **SECTION**

SCALE: 1/4" = 1'-0"

COMMONWEALTH OF VIRGINIA
J. DAMON SAMS
Lic. No. 055523
11/16/16
PROFESSIONAL ENGINEER

Dominion TRC

POWER GENERATION ENGINEERING
RICHMOND, VIRGINIA

TEMPORARY PUMP STATION PLAN

RETROFIT – SLUDGE SEDIMENTATION BASINS
CLOVER POWER STATION

REV	DATE	DSGN	DRWN	CHKD	DSGN SUPV	PROJ ENGR	CIVIL ENGR	ELEC ENGR	MECH ENGR	ARCH	E.M. ENGR	I&C ENGR
1	11 04 2016	JDS	TRC	HCB	NA	NA	RKN	CS	DS			
0	04 08 2016	JDS	TRC	HCB		NA	RKN	CS	DS			

1 REVISED LINER SYSTEM

0 ISSUED FOR BID

DSGN	DSAMS	DSGN SUPV	DATE APRIL 2016 DGNSPEC FOR FILE VERIFICATION
DRWN	DSAMS	ENGR SUPV	DRAWING NO. 66706-15348-CWSG-M4004 — REV. 1
CHKD	CBELL	PROJ ENGR	
DISPL ENGR	XXX	SCALE: AS NOTED	UNLESS OTHERWISE NOTED — SH 26 OF 41

PIPE SIZE	A	B	C	D MIN	D MAX
2-1/2	2-1/2	1-1/2	9	8	11-1/2
3	2-1/2	1-1/2	9	8-1/4	11-3/4
3-1/2	2-1/2	1-1/2	9	8-1/2	12
4	3	2-1/2	9	10-1/4	14
6	3	2-1/2	9	11-5/8	15-1/4
8	3	2-1/2	9	13-5/8	16-1/2
10	3	2-1/2	9	14-5/8	18-1/4
12	3	2-1/2	9	15-5/8	19-3/4
14	4	3	11	18-7/8	20-3/4

NOTES:
1. ALL SUPPORT COMPONENTS SHALL BE HOT-DIP GALVANIZED (HDG).

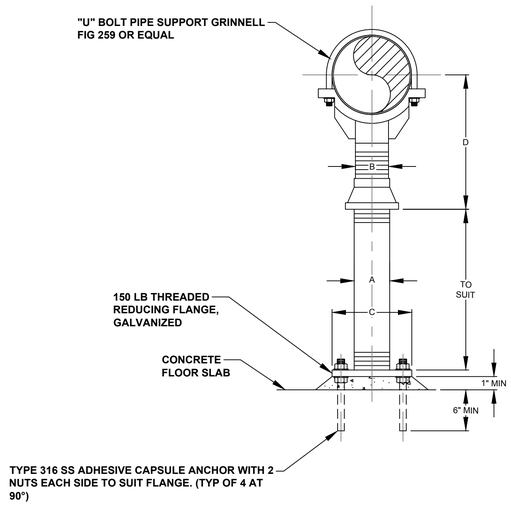

1 M4005 **ADJUSTABLE PIPE SUPPORT DETAIL**

(NOT TO SCALE)

REFERENCED ON SHEET M4002

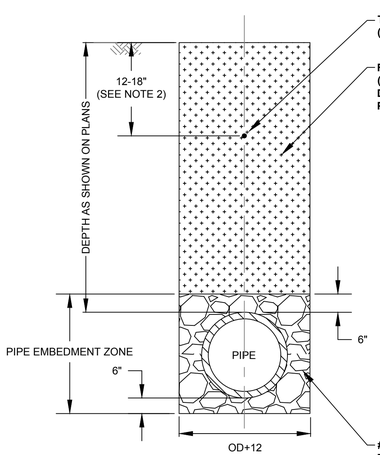

PIPE BACKFILL NOTES:

1. PIPE BACKFILL SHALL BE PLACED IN 9" HORIZONTAL LOOSE LIFTS AND COMPACTED TO 95% OF THE MAXIMUM DRY DENSITY PER ASTM D-698. THE BACKFILL SHALL BE COMPACTED AT ±2% OF THE OPTIMUM MOISTURE CONTENT. DEPTHS GREATER THAN TWELVE FEET SHALL BE COMPACTED TO 98% OF THE MAXIMUM DRY DENSITY PER ASTM D-698. AT THE MINIMUM, THERE SHALL BE ONE TEST PER LIFT FOR EVERY 150 LINEAR FEET OF TRENCH BACKFILL. THE CONTRACTOR WILL BE RESPONSIBLE FOR ALL COSTS ASSOCIATED WITH RETESTING DUE TO NONCOMPLIANCE.
2. ALL NON-FEROUS PIPE SHALL HAVE 14 GAUGE SOLID INDUCTIVE TRACER WIRE INSTALLED 12" BELOW THE SUBGRADE IN THE POND RECONSTRUCTION AREA AND 18" BELOW FINISHED GRADE IN ALL OTHER AREAS. INDUCTIVE TRACER WIRE SHALL BE ENCASED IN A PROTECTIVE, INERT, PLASTIC JACKET COLOR CODED IN ACCORDANCE WITH APWA UNIFORM COLOR CODE, AND INSTALLED ACCORDING TO THE MANUFACTURER'S INSTRUCTIONS.

3 M4005 **PIPE BACKFILL & EMBEDMENT DETAIL**

(NOT TO SCALE)

REFERENCED ON SHEET S3107, M4000

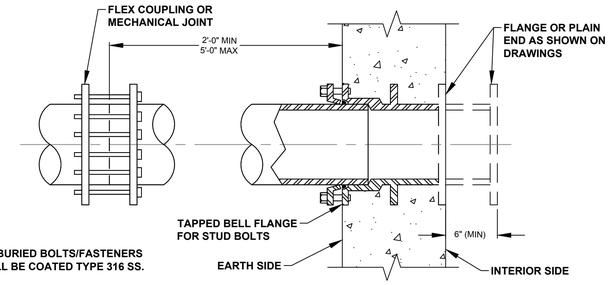

NOTE:
1. ALL BURIED BOLTS/FASTENERS SHALL BE COATED TYPE 316 SS.

2 M4005 **MJ WALL PIPE DETAIL**

(NOT TO SCALE)

REFERENCED ON SHEET M4003

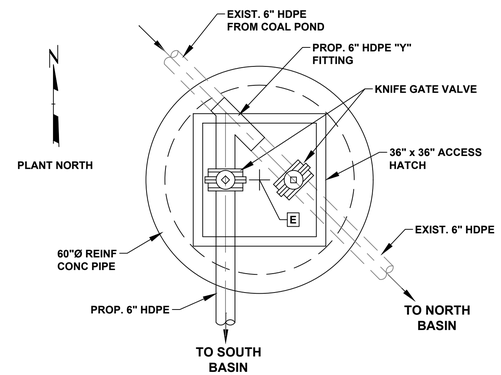

PLAN VIEW

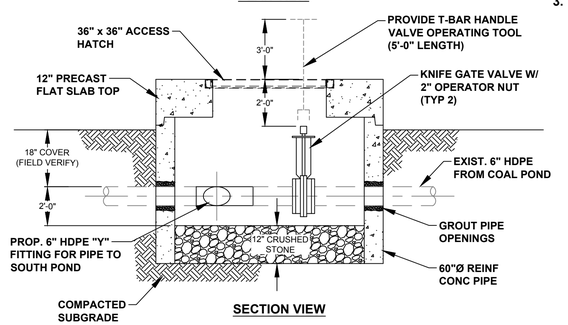

SECTION VIEW

5 M4005 **VALVE VAULT DETAIL**

(NOT TO SCALE)

REFERENCED ON SHEET S3107

NAD83 CONSTRUCTION COORDINATES			
TAG	OBJECT (CENTERLINE)	NORTHING	EASTING
E	6" HDPE VALVE VAULT	3476603.70	11423838.53

NOTES:

1. PROVIDE TYPE 316SS TAGS FOR ALL VALVES, GATES & EQUIPMENT.
2. REINFORCED CONCRETE PIPE SHALL BE MANUFACTURED IN ACCORDANCE WITH ASTM C-76. PRECAST FLAT SLAB TOP SHALL BE PER ASTM C-478. PROVIDE RUBBER GASKET PER ASTM C-443.
3. REFER TO VALVE VAULT EQUIPMENT SCHEDULE, THIS SHEET.

VALVE VAULT EQUIPMENT SCHEDULE				
EQUIPMENT	FLN TAG	QTY	DETAILS	MANUFACTURER REFERENCE DRAWING
ACCESS HATCH		1.00	BILCO TYPE J-AL 36" x 36" ALUMINUM CHANNEL FRAME DOOR. FLUSH WITH TOP OF CONCRETE. PROVIDE PADLOCK HASP	J-1AL
KNIFE GATE VALVE		2.00	CLARKSON 6" MODEL KGA10. EPOXY COATED IRON BODY. 316SS STEM & GATE, NATURAL RUBBER SLEEVES, 100PSI WORKING PRESSURE.	CLKMC-0113-5-13

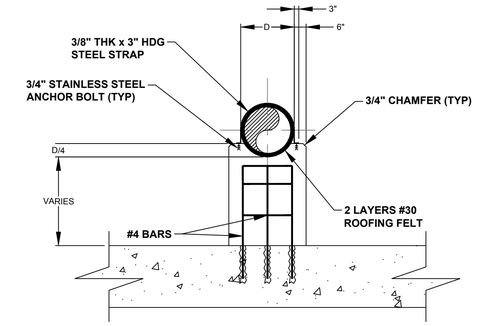

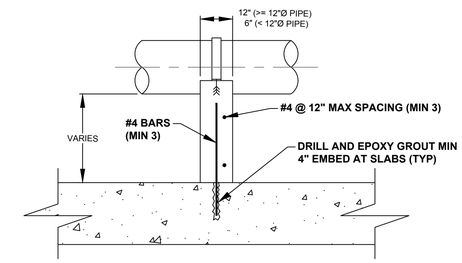

4 M4005 **CONCRETE PIPE SUPPORT DETAIL**

(NOT TO SCALE)

REFERENCED ON SHEET M4003

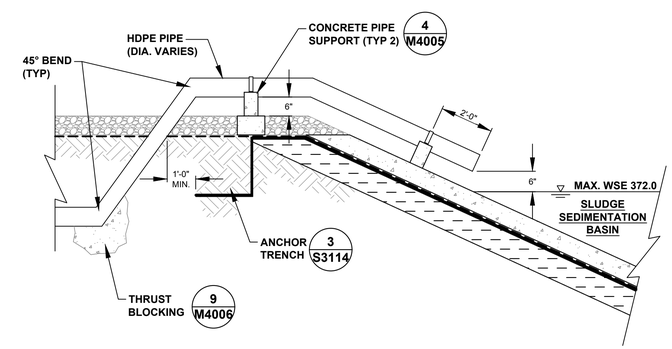

6 M4005 **TYPICAL PIPE-TO-BASIN DETAIL**

(NOT TO SCALE)

REFERENCED ON SHEET S3107

COMMONWEALTH OF VIRGINIA
J. DAMON SAMS
Lic. No. 055523
11/16/16
PROFESSIONAL ENGINEER

Dominion TRC

POWER GENERATION ENGINEERING
RICHMOND, VIRGINIA

MECHANICAL DETAILS 1

RETROFIT – SLUDGE SEDIMENTATION BASINS
CLOVER POWER STATION

REV	DATE	DSGN	DRWN	CHKD	DSGN SUPV	PROJ ENGR	CIVIL ENGR	ELEC ENGR	MECH ENGR	ARCH	E.M. ENGR	I&C ENGR
1	11 04 2016	JDS	TRC	HCB	NA	NA	RKN	CS	DS			
0	04 08 2016	JDS	TRC	HCB		NA	RKN	CS	DS			

1 REVISED LINER SYSTEM
0 ISSUED FOR BID

DSGN	DSAMS	DSGN SUPV	DATE APRIL 2016 DGNSPEC FOR FILE VERIFICATION
DRWN	DSAMS	ENGR SUPV	DRAWING NO. 66706-15348-CWSG-M4005 — REV. 1
CHKD	CBELL	PROJ ENGR	
DISPL ENGR	XXX	SCALE: AS NOTED	UNLESS OTHERWISE NOTED — SH 27 OF 41

H:\Proposals\2015.

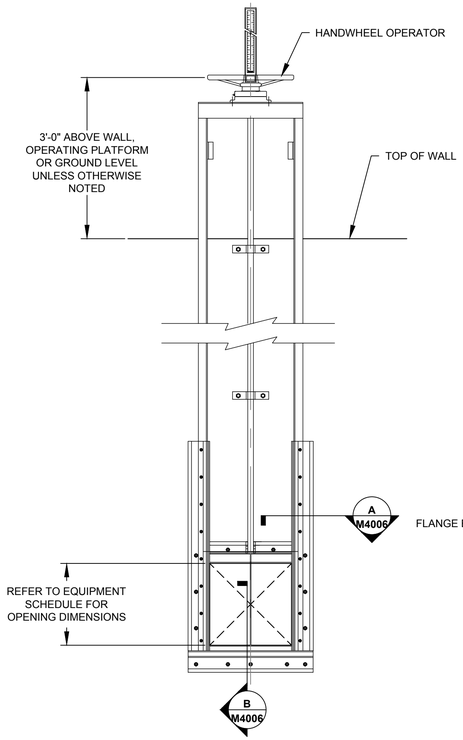

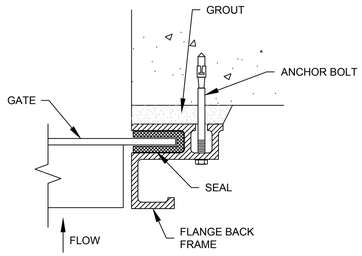

A M4006 NTS

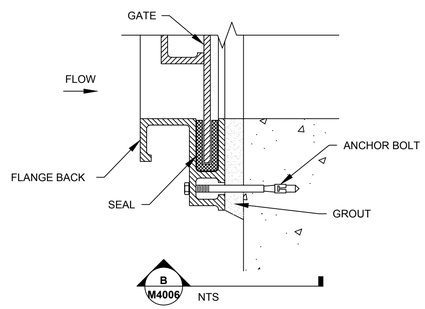

B M4006 NTS

NOTES:
1. SLIDE GATE SHALL BE BOLTED TO CONCRETE STRUCTURE WITH 316SS EPOXY ANCHORS FOLLOWING MANUFACTURER'S INSTRUCTIONS.
2. SLIDE GATE FABRICATION INFORMATION INCLUDING ANCHOR BOLT PATTERN SHALL BE PROVIDED IN THE SUBMITTAL PACKAGE FOR ENGINEER'S REVIEW PRIOR TO FABRICATION.
3. REFER TO SPECIFICATION SECTION 11203.

7 M4006 SLIDE GATE DETAIL

(NOT TO SCALE)

REFERENCED ON SHEETS M4001, M4002

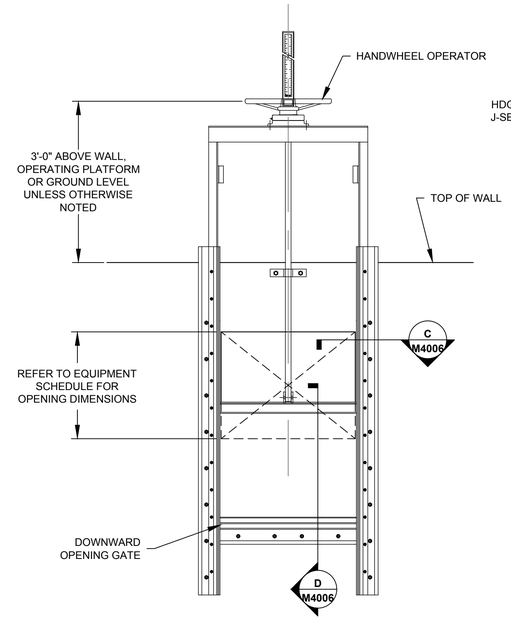

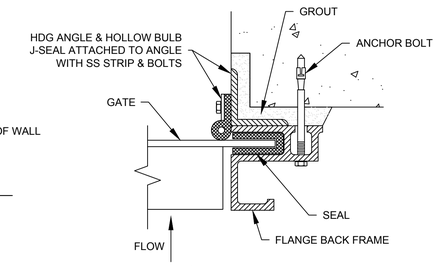

C M4006 NTS

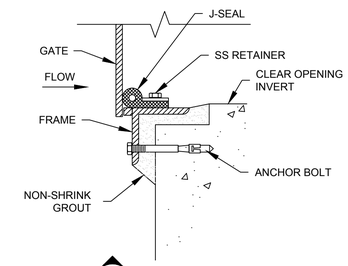

D M4006 NTS

8 M4006 WEIR GATE DETAIL

(NOT TO SCALE)

REFERENCED ON SHEETS M4001, M4002

NOTES:
1. WEIR GATE SHALL BE BOLTED TO CONCRETE STRUCTURE WITH 316SS EPOXY ANCHORS FOLLOWING MANUFACTURER'S INSTRUCTIONS.
2. GATE FABRICATION INFORMATION INCLUDING ANCHOR BOLT PATTERN SHALL BE PROVIDED IN THE SUBMITTAL PACKAGE FOR ENGINEER'S REVIEW PRIOR TO FABRICATION.
3. REFER TO SPECIFICATION SECTION 11203.

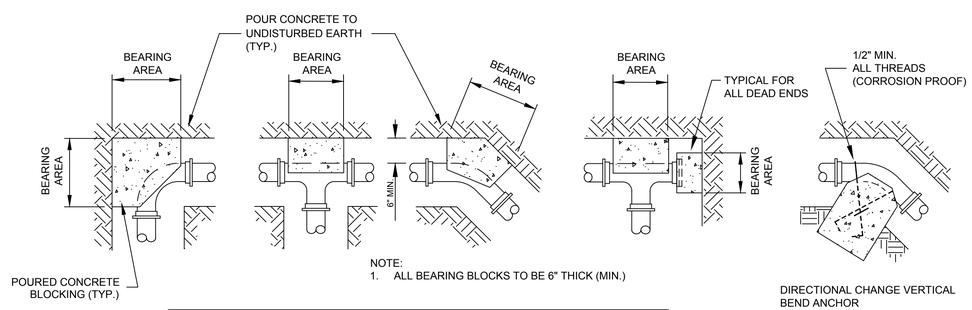

NOTE:
1. ALL BEARING BLOCKS TO BE 6" THICK (MIN.)

MIN. BEARING AREA OF BLOCK IN SQ. FT.
(UNLESS OTHERWISE INDICATED ON THE PLANS)

FITTING SIZES	TEE & END	90° BEND	45° BEND	22 1/2° BEND	11 1/4° BEND
TO 6"	3.6	5.4	2.5	2.0	2.0
8"	6.3	8.9	4.8	2.5	2.0
10"	9.9	13.9	7.6	3.9	2.0
12"	14.2	20.0	10.9	5.6	2.8
16"	25.1	35.5	19.2	9.8	4.9

APPLY MULTIPLIER TO MIN. BEARING AREA ACCORDING TO SOIL BEARING PRESSURE

SOIL BEARING PRESSURE	MULTIPLIER
1000	2.0
1500	1.33
2000	1.0
3000	0.67

9 M4006 THRUST BLOCKING DETAIL

(NOT TO SCALE)

REFERENCED ON SHEETS M4002, M4003, & M4005

COMMONWEALTH OF VIRGINIA
J. DAMON SAMS
Lic. No. 055523
11/16/16
PROFESSIONAL ENGINEER

Dominion TRC

POWER GENERATION ENGINEERING
RICHMOND, VIRGINIA

MECHANICAL DETAILS 2

RETROFIT – SLUDGE SEDIMENTATION BASINS
CLOVER POWER STATION

REV	DATE	DSGN	DRWN	CHKD	DSGN SUPV	PROJ ENGR	CIVIL ENGR	ELEC ENGR	MECH ENGR	ARCH	E.M. ENGR	I&C ENGR	REV	DATE	DSGN	DRWN	CHKD	DSGN SUPV	PROJ ENGR	CIVIL ENGR	ELEC ENGR	MECH ENGR	ARCH	E.M. ENGR	I&C ENGR	REV	DATE	DSGN	DRWN	CHKD	DSGN SUPV	PROJ ENGR	CIVIL ENGR	ELEC ENGR	MECH ENGR	ARCH	E.M. ENGR	I&C ENGR	REV	DATE	DSGN	DRWN	CHKD	DSGN SUPV	PROJ ENGR	CIVIL ENGR	ELEC ENGR	MECH ENGR	ARCH	E.M. ENGR	I&C ENGR
																										1	REVISED LINER SYSTEM													0	ISSUED FOR BID											
																											11 04 2016	JDS	TRC	HCB	NA	NA	RKN	CS	DS						04 08 2016	JDS	TRC	HCB		NA	RKN	CS	DS			

DSGN	DSAMS	DSGN SUPV	DATE APRIL 2016 DGNSPEC FOR FILE VERIFICATION
DRWN	DSAMS	ENGR SUPV	DRAWING NO. 66706–15348–CWSG–M4006 REV. 1
CHKD	CBELL	PROJ ENGR	
DISPL ENGR	XXX	SCALE: AS NOTED	UNLESS OTHERWISE NOTED SH 28 OF 41

NAD83 CONSTRUCTION COORDINATES			
TAG	OBJECT (CENTERLINE)	NORTHING	EASTING
H	PUMP STATION	3476249.01	11424029.00

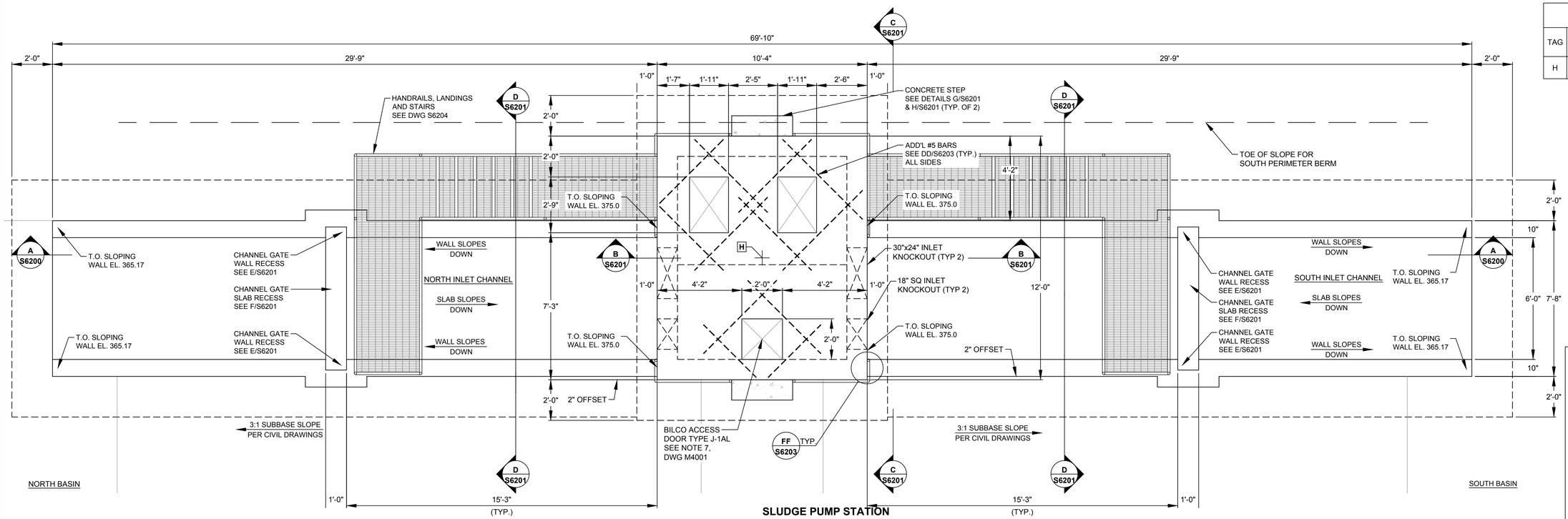

SLUDGE PUMP STATION PLAN VIEW

SCALE: 3/8" = 1'-0"

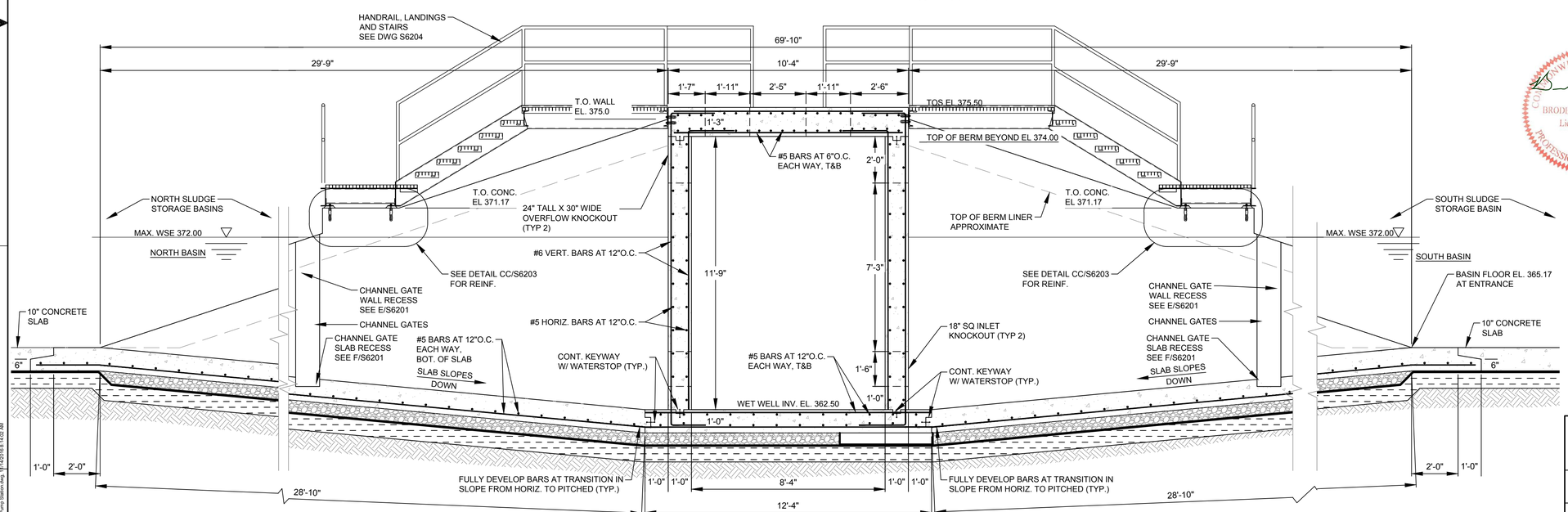

SLUDGE PUMP STATION SECTION A

A S6200

SCALE: 3/8" = 1'-0"

NOTES:

1. SEE GENERAL NOTES FOR SUBGRADE PREPARATION AND DETAIL 1, DRAWING S3114 FOR LINER SYSTEM BELOW THE PUMP STATION.
2. LINE INTERIOR SURFACES OF ALL FLOORS AND WALLS WITH 2-PART EPOXY IN ACCORDANCE WITH SPECIFICATIONS.
3. WATER STOP ALL CONSTRUCTION AND CONTROL JOINTS IN ACCORDANCE WITH THESE PLANS AND SPECIFICATIONS.
4. SEE SPECIFICATIONS SECTION 03300 FOR STRENGTH OF CONCRETE AND REINFORCING STEEL COVER REQUIREMENTS.
5. DE-WATER AND DO NOT BACKFILL CAST-IN-PLACE CONCRETE STRUCTURES UNTIL 28-DAY STRENGTH OF CONCRETE.
6. STOP GATE EMBEDDED FRAME NOTCH DIMENSIONS TO BE CONFIRMED BY MANUFACTURER.
7. SEE DRAWING M4001 FOR EQUIPMENT DETAILS.

COMMONWEALTH OF VIRGINIA
11/16/16
BRODERICK C. ATTRA
Lic. No. 55325
PROFESSIONAL ENGINEER

EQUIPMENT SCHEDULE				
EQUIPMENT	FLN TAG	QTY	DETAILS	MANUFACTURER REFERENCE DRAWING
SLUDGE PUMP	WSGP-2A WSGP-2B	2.00	LAWRENCE PUMPS MODEL VPL3200	D47962
ACCESS HATCH	0.00	1.00	BILCO TYPE J-AL 24" x 24" ALUMINUM CHANNEL FRAME DOOR. FLUSH WITH TOP OF CONCRETE. PROVIDE PADLOCK HASP & FALL PROTECTION GRATING SYSTEM	J-1AL
OVERFLOW WEIR GATE		2.00	FONTAINE 24"H x 30"W SERIES 40 WALL MOUNTED WEIR GATE. CONSTRUCTED OF 316SS	DWG-403-SERIES-40-SS-WEIRGATE
SLIDE GATE	0.00	2.00	FONTAINE 18" x 18" SERIES 20 WALL MOUNTED SLUICE GATE. CONSTRUCTED OF 316SS	DWG-203-SERIES-20-SS-SLUICE-GATE
CHANNEL STOP GATE	0.00	2.00	FONTAINE 72" x 72" SERIES 25 DUAL-STEM EMBEDDED FRAME STOP GATE. CONSTRUCTED OF 316SS	DWG-253-SERIES-25-SS-STOPGATE

Dominion — TRC

POWER GENERATION ENGINEERING
RICHMOND, VIRGINIA

STRUCTURAL – SLUDGE PUMP STATION

RETROFIT – SLUDGE SEDIMENTATION BASINS
CLOVER POWER STATION

DSGN	CA	DSGN SUPV		DATE FEBRUARY 2016 DGNSPEC FOR FILE VERIFICATION	
DRWN	BZ	ENGR SUPV		DRAWING NO. 66706-15348-CWSG-S6200	REV. 1
CHKD	CA	PROJ ENGR			
DISPL ENGR	XXX	SCALE: 3/8"=1'-0"		UNLESS OTHERWISE NOTED	SH 29 OF 41

REV	DATE	DSGN	DRWN	CHKD	DSGN SUPV	PROJ ENGR	CIVIL ENGR	ELEC ENGR	MECH ENGR	ARCH	E.M. ENGR	I&C ENGR	REV	DATE	DSGN	DRWN	CHKD	DSGN SUPV	PROJ ENGR	CIVIL ENGR	ELEC ENGR	MECH ENGR	ARCH	E.M. ENGR	I&C ENGR	REV	DATE	DSGN	DRWN	CHKD	DSGN SUPV	PROJ ENGR	CIVIL ENGR	ELEC ENGR	MECH ENGR	ARCH	E.M. ENGR	I&C ENGR	REV	DATE	DSGN	DRWN	CHKD	DSGN SUPV	PROJ ENGR	CIVIL ENGR	ELEC ENGR	MECH ENGR	ARCH	E.M. ENGR	I&C ENGR
																										1	11 16 2016	CA	BZ	CA	NA								0	04 01 2016	CA	BZ	CA										

REVISED LINER SYSTEM

BID SET

E:\Drawn\15180.00 - MB Storm\Mb\Clover\06200 - Sludge Pump Station.dwg | 11/4/2016 1:14:05 AM

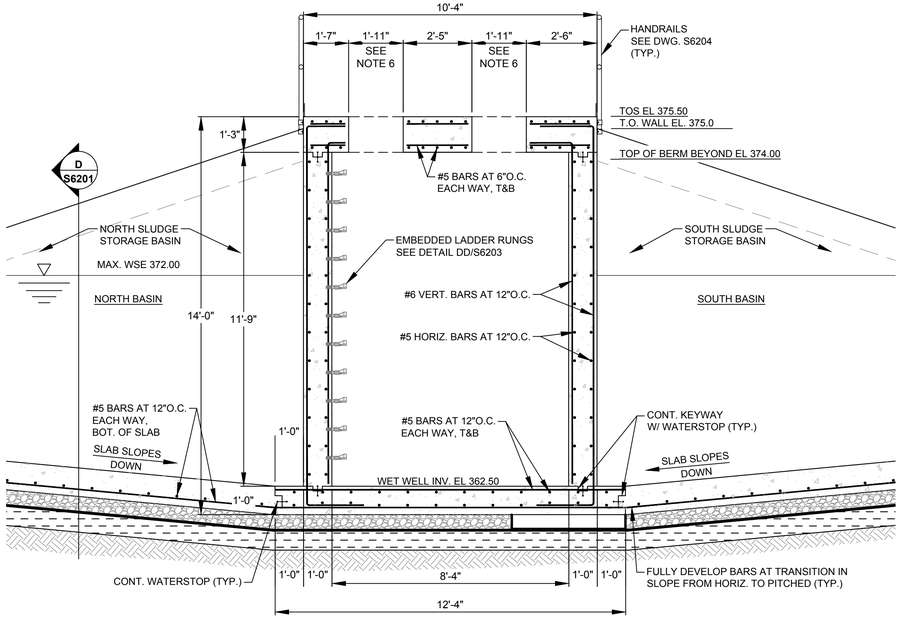

B S6201 SLUDGE PUMP STATION
SECTION - BERM BETWEEN BASINS
SCALE: 3/8" = 1'-0"

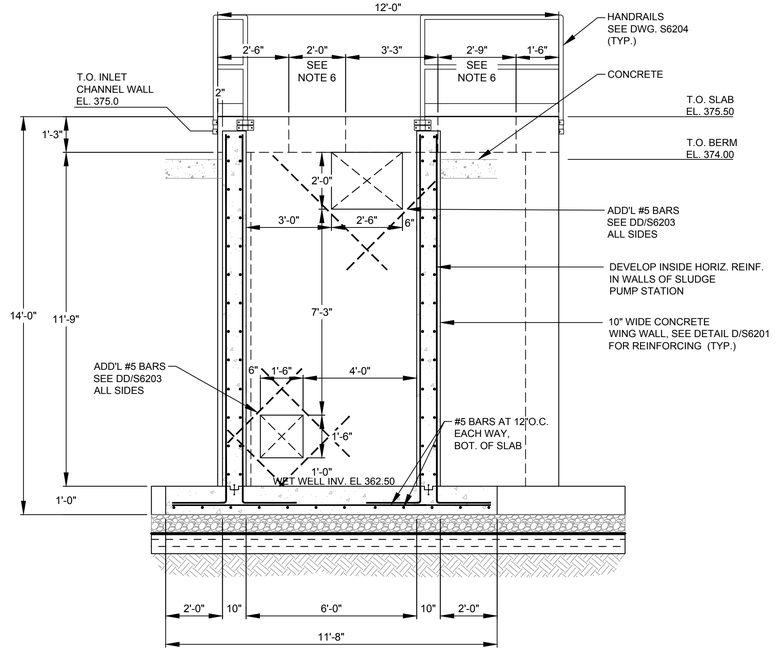

C S6201 SLUDGE PUMP STATION
ELEVATION - SLUDGE PUMP
SCALE: 3/8" = 1'-0"

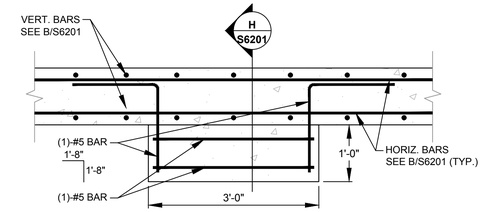

G S6201 SLUDGE PUMP STATION
DETAIL - CONCRETE STEP
SCALE: 3/8" = 1'-0"

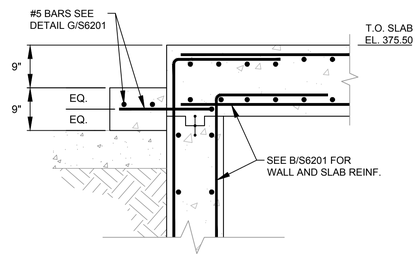

H S6201 SLUDGE PUMP STATION
SECTION - CONCRETE STEP
SCALE: 3/8" = 1'-0"

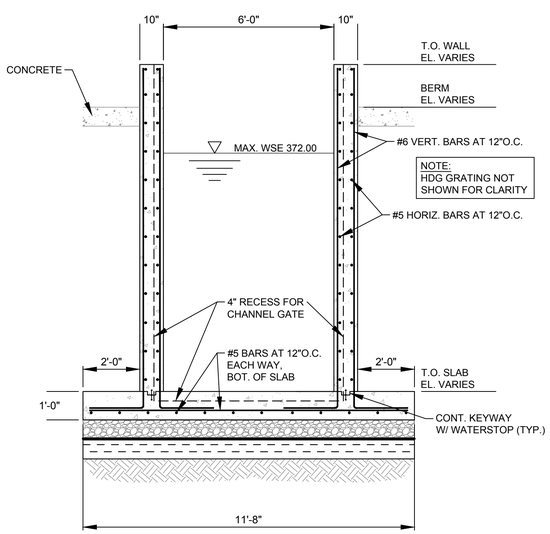

D S6201 SLUDGE PUMP STATION - INLET CHANNEL
SECTION - BETWEEN BERMS
SCALE: 3/8" = 1'-0"

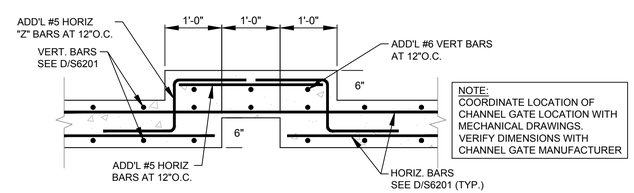

E S6201 SLUDGE PUMP STATION
DETAIL - CHANNEL GATE WALL RECESS
SCALE: 3/8" = 1'-0"

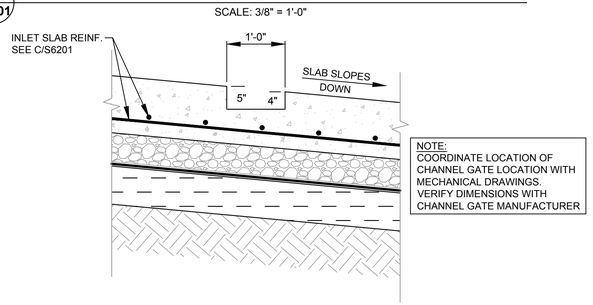

F S6201 SLUDGE PUMP STATION
DETAIL - CHANNEL GATE SLAB RECESS
SCALE: 3/8" = 1'-0"

EQUIPMENT SCHEDULE

EQUIPMENT	FLN TAG	QTY	DETAILS	MANUFACTURER REFERENCE DRAWING
SLUDGE PUMP	WSGP-2A WSGP-2B	2.00	LAWRENCE PUMPS MODEL VPL3200	D47962
ACCESS HATCH		1.00	BILCO TYPE J-AL 24" x 24" ALUMINUM CHANNEL FRAME DOOR. FLUSH WITH TOP OF CONCRETE. PROVIDE PADLOCK HASP & FALL PROTECTION GRATING	J-1AL
OVERFLOW WEIR GATE		2.00	FONTAINE 24"H x 30"W SERIES 40 WALL MOUNTED WEIR GATE. CONSTRUCTED OF 316SS	DWG-403-SERIES-40-SS -WEIRGATE
SLIDE GATE		2.00	FONTAINE 18" x 18" SERIES 20 WALL MOUNTED SLUICE GATE. CONSTRUCTED OF 316SS	DWG-203-SERIES-20-SS -SLUICE-GATE
CHECK VALVE		2.00	GA INDUSTRIES 6" FIGURE 340-W SWING CHECK VALVE. EPOXY COATED IRON BODY. 316SS BODY SEAT, SHAFT & KEY. RESILIENT SEATED.	C-1366 REV. A
KNIFE GATE VALVE	CWSG-BV-10 CWSG-BV-12	2.00	CLARKSON 6" MODEL KGA10. EPOXY COATED IRON BODY. 316SS STEM & GATE, NATURAL RUBBER SLEEVES, 100PSI WORKING PRESSURE.	CLKMC-0113-5-13
DIAPHRAGM VALVE	CWSG-BV-21 CWSG-BV-23 CWSG-BV-27 CWSG-BV-28	4.00	SAUNDERS 1" A-TYPE (WEIR) VALVE WITH NATURAL RUBBER DIAPHRAGM, CAST IRON BODY WITH RUBBER LINING.	IDV336555
PRESSURE GAUGE		2.00	ASHCROFT 1279 DURAGAUGE. 0-100 PSI RANGE. EPOXY COATED, SUITABLE FOR MATERIAL PUMPED	DURAGAUGE-45-1279-0 2b

COMMONWEALTH OF VIRGINIA
BRODERICK C. ATTRA
Lic. No. 55325
11.16.16
PROFESSIONAL ENGINEER

NOTES:

1. SEE GENERAL NOTES FOR SUBGRADE PREPARATION AND DETAIL 1, DRAWING S3114 FOR LINER SYSTEM BELOW THE PUMP STATION.
2. LINE INTERIOR SURFACES OF ALL FLOORS AND WALLS WITH 2-PART EPOXY IN ACCORDANCE WITH SPECIFICATIONS.
3. WATER STOP ALL CONSTRUCTION AND CONTROL JOINTS IN ACCORDANCE WITH THESE PLANS AND SPECIFICATIONS.
4. SEE SPECIFICATIONS SECTION 03300 FOR STRENGTH OF CONCRETE AND REINFORCING STEEL COVER REQUIREMENTS.
5. DE-WATER AND DO NOT BACKFILL CAST-IN-PLACE CONCRETE STRUCTURES UNTIL 28-DAY STRENGTH OF CONCRETE.
6. OPENING DIMENSIONS TO BE CONFIRMED BY PUMP MANUFACTURER.

REV	DATE	DSGN	DRWN	CHKD	DSGN SUPV	PROJ ENGR	CIVIL ENGR	ELEC ENGR	MECH ENGR	ARCH	E.M. ENGR	I&C ENGR
1	11 16 2016	CA	BZ	CA	NA							
0	04 01 2016	CA	BZ	CA								

1 REVISED LINER SYSTEM
0 BID SET

Dominion
TRC

POWER GENERATION ENGINEERING
RICHMOND, VIRGINIA

STRUCTURAL – SLUDGE PUMP STATION

RETROFIT – SLUDGE SEDIMENTATION BASINS
CLOVER POWER STATION

DSGN CA	DSGN SUPV	DATE FEBRUARY 2016 DGNSPEC FOR FILE VERIFICATION	
DRWN BZ	ENGR SUPV	DRAWING NO. 66706-15348-CWSG-S6201	REV. 1
CHKD CA	PROJ ENGR		
DISPL ENGR XXX	SCALE: 3/8"=1'-0"	UNLESS OTHERWISE NOTED	SH 30 OF 41

E:\Work\15136.00 - MS Bowman\90% Drawings\Clover\S6201 - Sludge Pump Station.dwg, | 11/4/2016 8:14:10 AM

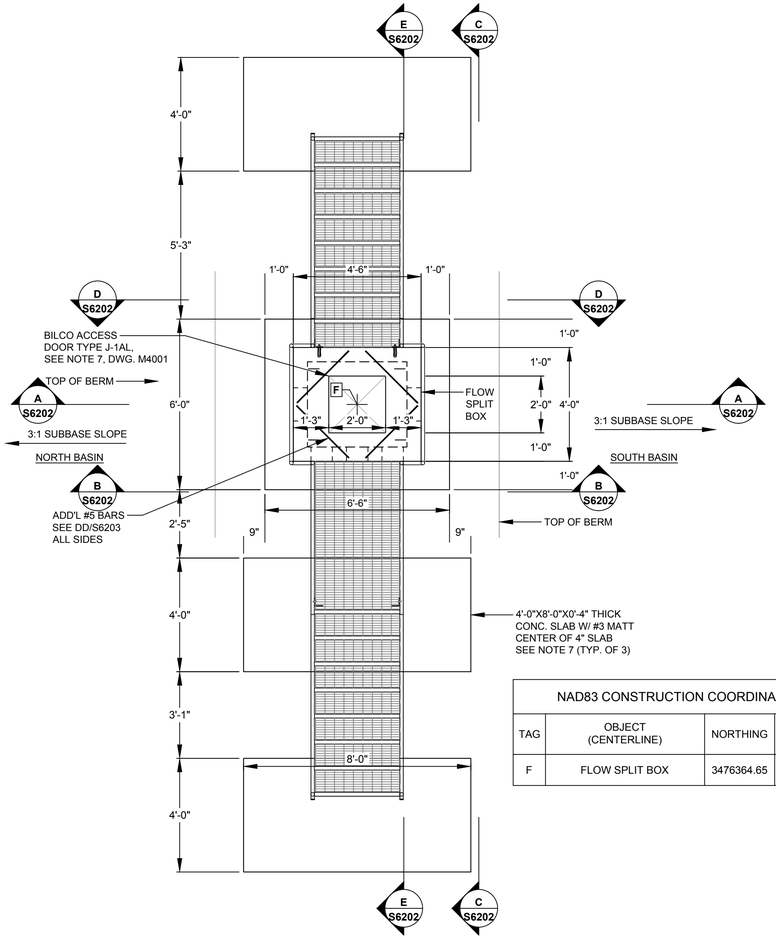

FLOW SPLIT BOX PLAN VIEW
SCALE: 3/8" = 1'-0"

NAD83 CONSTRUCTION COORDINATES			
TAG	OBJECT (CENTERLINE)	NORTHING	EASTING
F	FLOW SPLIT BOX	3476364.65	11423811.46

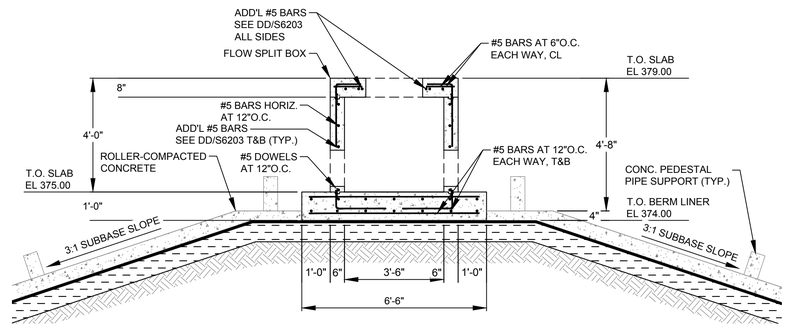

FLOW SPLIT BOX SECTION A
A S6202
SCALE: 3/8" = 1'-0"

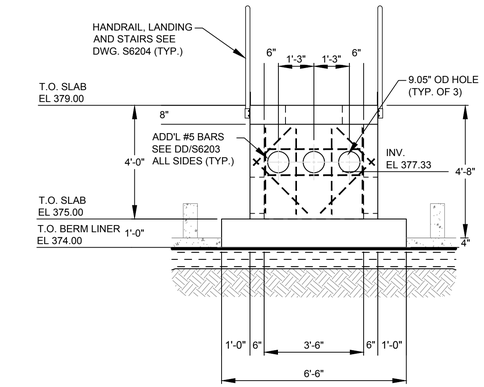

FLOW SPLIT BOX ELEVATION - 1
B S6202
SCALE: 3/8" = 1'-0"

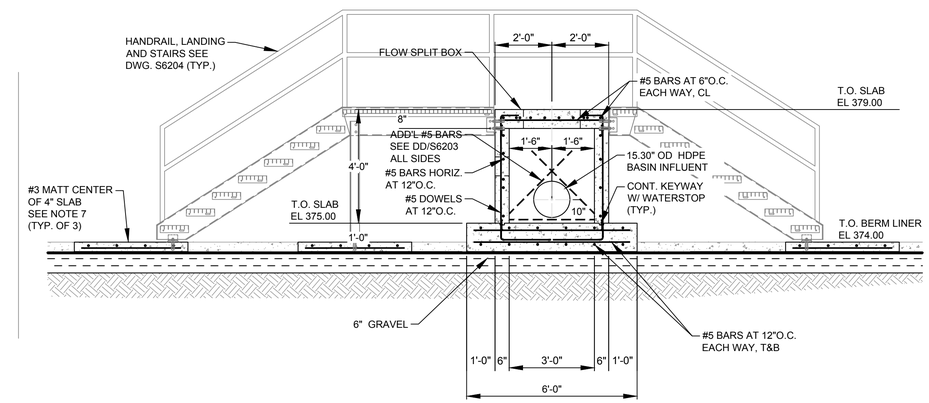

FLOW SPLIT BOX SECTION - THROUGH SPLIT BOX
E S6202
SCALE: 3/8" = 1'-0"

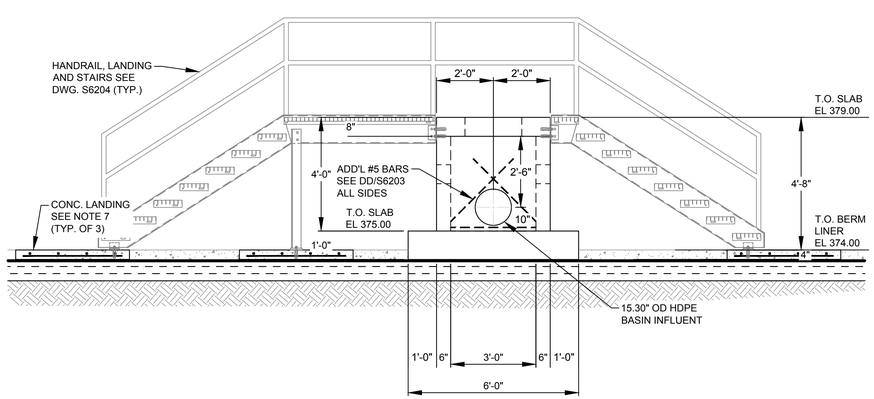

FLOW SPLIT BOX SECTION C
C S6202
SCALE: 3/8" = 1'-0"

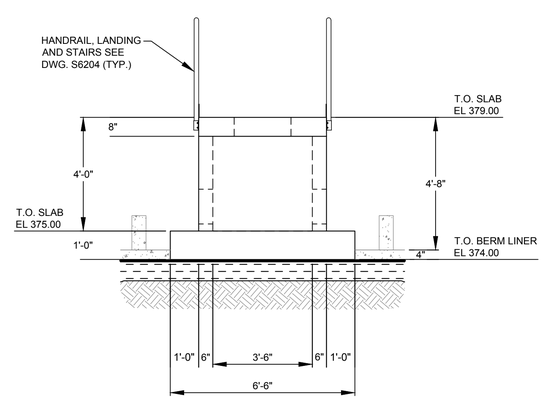

FLOW SPLIT BOX SECTION D
D S6202
SCALE: 3/8" = 1'-0"

EQUIPMENT SCHEDULE				
EQUIPMENT	FLN TAG	QTY	DETAILS	MANUFACTURER REFERENCE DRAWING
ACCESS HATCH	0.00	1.00	BILCO TYPE J-AL 24" x 24" ALUMINUM CHANNEL FRAME DOOR. FLUSH WITH TOP OF CONCRETE. PROVIDE PADLOCK HASP	J-1AL
KNIFE GATE VALVE	0.00	2.00	CLARKSON 14" MODEL KGA10. EPOXY COATED IRON BODY. 316SS STEM & GATE, NATURAL RUBBER SLEEVES, 100PSI WORKING PRESSURE.	CLKMC-0113-5-13

NOTES:

1. SEE GENERAL NOTES FOR SUBGRADE PREPARATION AND DETAIL 1, DRAWING S3114 FOR LINER SYSTEM BELOW THE PUMP STATION.
2. LINE INTERIOR SURFACES OF ALL FLOORS AND WALLS WITH 2-PART EPOXY IN ACCORDANCE WITH SPECIFICATIONS.
3. WATER STOP ALL CONSTRUCTION AND CONTROL JOINTS IN ACCORDANCE WITH THESE PLANS AND SPECIFICATIONS.
4. SEE SPECIFICATIONS SECTION 03300 FOR STRENGTH OF CONCRETE AND REINFORCING STEEL COVER REQUIREMENTS.
5. DE-WATER AND DO NOT BACKFILL CAST-IN-PLACE CONCRETE STRUCTURES UNTIL 28-DAY STRENGTH OF CONCRETE.
6. SEE DRAWING M4003 FOR PIPE DIAMETERS. PIPE DIAMETERS ARE NOMINAL. ACTUAL SIZE OF PIPE OPENINGS TO BE PER MANUFACTURER RECOMMENDATIONS.
7. SUBMIT PROPOSED AIR ENTRAINED MIX IN ACCORDANCE WITH SPECIFICATION 03300 TO ENGINEER FOR APPROVAL.

COMMONWEALTH OF VIRGINIA
11.16.16
BRODERICK C. ATTRA
Lic. No. 55325
PROFESSIONAL ENGINEER

Dominion
TRC

POWER GENERATION ENGINEERING
RICHMOND, VIRGINIA

STRUCTURAL – FLOW SPLIT BOX

RETROFIT – SLUDGE SEDIMENTATION BASINS
CLOVER POWER STATION

REV	DATE	DSGN	DRWN	CHKD	DSGN SUPV	PROJ ENGR	CIVIL ENGR	ELEC ENGR	MECH ENGR	ARCH	E.M. ENGR	I&C ENGR
1	11 16 2016	CA	BZ	CA	NA							
0	04 01 2016	CA	BZ	CA								

1 REVISED LINER SYSTEM
0 BID SET

DSGN	CA	DSGN SUPV	DATE FEBRUARY 2016 DGNSPEC FOR FILE VERIFICATION
DRWN	BZ	ENGR SUPV	DRAWING NO. 66706-15348-CWSG-S6202 — REV. 1
CHKD	CA	PROJ ENGR	
DISPL ENGR	XXX	SCALE: 3/8"=1'-0"	UNLESS OTHERWISE NOTED — SH 31 OF 41

E:\Wind\15136.00 - MB Bloom\95% Drawings\Clover\S6202 - Flow Split Box.dwg, 11/14/2016 8:14:10 AM

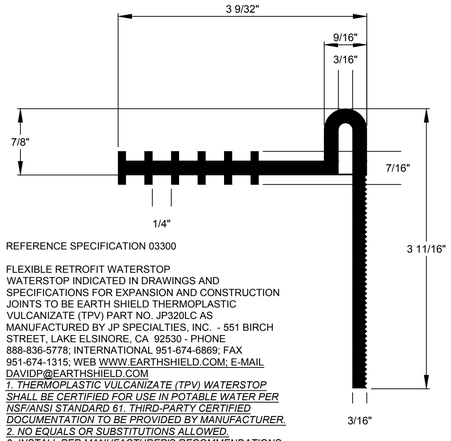

REFERENCE SPECIFICATION 03300

FLEXIBLE RETROFIT WATERSTOP
WATERSTOP INDICATED IN DRAWINGS AND SPECIFICATIONS FOR EXPANSION AND CONSTRUCTION JOINTS TO BE EARTH SHIELD THERMOPLASTIC VULCANIZATE (TPV) PART NO. JP320LC AS MANUFACTURED BY JP SPECIALTIES, INC. - 551 BIRCH STREET, LAKE ELSINORE, CA 92530 - PHONE 888-836-5778; INTERNATIONAL 951-674-6869; FAX 951-674-1315; WEB WWW.EARTHSHIELD.COM; E-MAIL DAVIDP@EARTHSHIELD.COM
1. THERMOPLASTIC VULCANIZATE (TPV) WATERSTOP SHALL BE CERTIFIED FOR USE IN POTABLE WATER PER NSF/ANSI STANDARD 61. THIRD-PARTY CERTIFIED DOCUMENTATION TO BE PROVIDED BY MANUFACTURER.
2. NO EQUALS OR SUBSTITUTIONS ALLOWED.
3. INSTALL PER MANUFACTURER'S RECOMMENDATIONS.

INCLUDED COMPONENTS:
20 EACH (PER 10 LFT WATERSTOP LENGTH) - 2-1/4" X 1/4" STAINLESS STEEL WEDGE ANCHOR.

1 EACH (PER 10 LFT WATERSTOP LENGTH) - 3/16" X 1-1/2" X 119.5" STAINLESS STEEL BATTEN BAR (PREPUNCHED 6" ON-CENTER TO ACCOMMODATE ANCHORS).

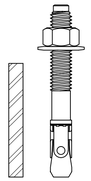

AA S6203 TYPICAL PIPE PENETRATION WATERSTOP
SCALE: NO SCALE

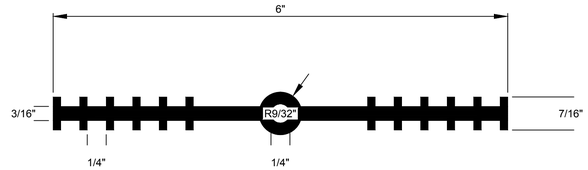

REFERENCE SPECIFICATION 03300

FLEXIBLE WATERSTOP
WATERSTOP INDICATED IN DRAWINGS AND SPECIFICATIONS FOR CONTRACTION (CONTROL), EXPANSION AND CONSTRUCTION JOINTS TO BE EARTH SHIELD THERMOPLASTIC VULCANIZATE (TPV) PART NO. JP636 AS MANUFACTURED BY JP SPECIALTIES, INC. - 551 BIRCH STREET, LAKE ELSINORE, CA 92530 - PHONE 888-836-5778; INTERNATIONAL 951-674-6869; FAX 951-674-1315; WEB WWW.EARTHSHIELD.COM; E-MAIL DAVIDP@EARTHSHIELD.COM
1. THERMOPLASTIC VULCANIZATE (TPV) WATERSTOP SHALL BE CERTIFIED FOR USE IN POTABLE WATER PER NSF/ANSI STANDARD 61. THIRD-PARTY CERTIFIED DOCUMENTATION TO BE PROVIDED BY MANUFACTURER.
2. NO EQUALS OR SUBSTITUTIONS ALLOWED.

AVAILABLE WITH FACTORY INSTALLED BRASS EYELETS. THE EYELETS PROVIDE FOR A CONVENIENT AND DURABLE TIE-OFF POINT FOR WIRE TYING THE WATERSTOP TO THE STEEL REINFORCEMENT PRIOR TO THE CONCRETE POUR. JP SPECIALTIES INSTALLS THE BRASS EYELETS AT 12" CENTERS, BETWEEN THE LAST TWO RIBS, TO PROVIDE MAXIMUM RESISTANCE AND RIGIDITY TO THE POURED CONCRETE WEIGHT.

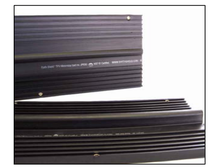

BB S6203 TYPICAL WATERSTOP - COLD JOINTS
SCALE: NO SCALE

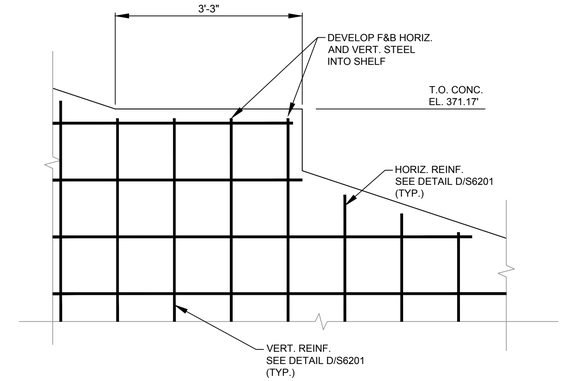

CC S6203 CONCRETE SHELF - SLUDGE PUMP STATION (TYPICAL)
SCALE: 3/4" = 1'-0"

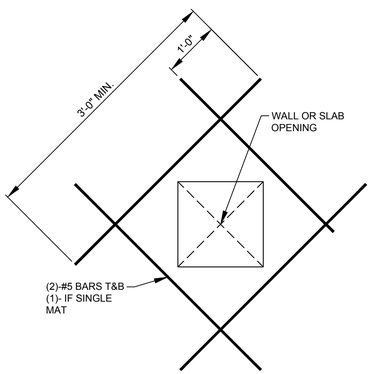

DETAIL AT SQUARE OPENINGS

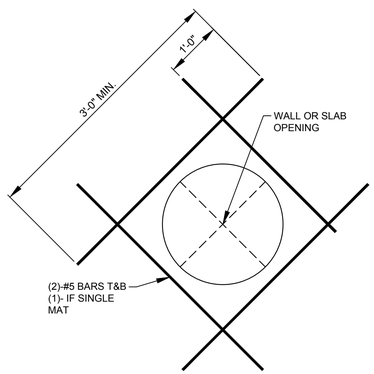

DETAIL AT CIRCULAR OPENINGS

DD S6203 ROUGH OPENINGS AND PIPE PENETRATION REINFORCING DETAILS
SCALE: NO SCALE

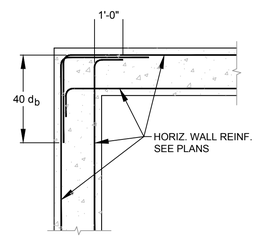

EE S6203 TYPICAL CORNER REINFORCING
SCALE: 3/8" = 1'-0"

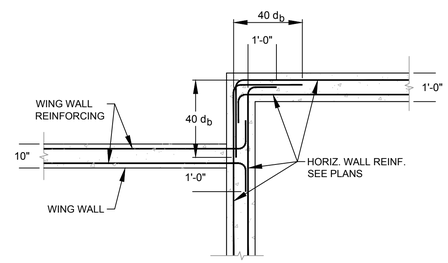

FF S6203 TYPICAL WING WALL TO SLUDGE PUMP STATION WALL CONNECTION
SCALE: 3/8" = 1'-0"

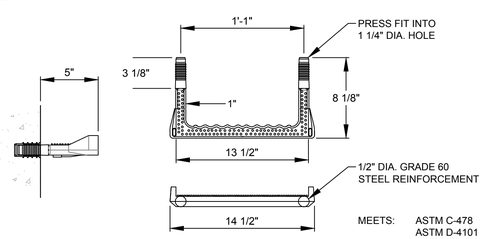

COPOLYMER POLYPROPYLENE PLASTIC

MEETS: ASTM C-478
ASTM D-4101
ASTM A-615
AASHTO M-199

HH S6203 TYPICAL EMBEDDED LADDER RUNG DETAIL
SCALE: NO SCALE

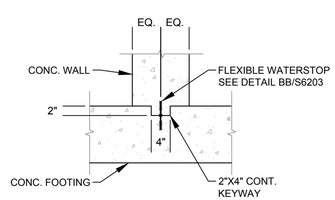

GG S6203 TYPICAL KEYWAY DETAIL
SCALE: 3/4" = 1'-0"

COMMONWEALTH OF VIRGINIA
111616
BRODERICK C. ATTRA
Lic. No. 55325
PROFESSIONAL ENGINEER

REV	DATE	DSGN	DRWN	CHKD	DSGN SUPV	PROJ ENGR	CIVIL ENGR	ELEC ENGR	MECH ENGR	ARCH	E.M. ENGR	I&C ENGR
1	11 16 2016	CA	BZ	CA	NA							
0	04 01 2016	CA	BZ	CA								

1 REVISED LINER SYSTEM
0 BID SET

Dominion TRC

POWER GENERATION ENGINEERING
RICHMOND, VIRGINIA

STRUCTURAL – TYP. SECTIONS & DETAILS

RETROFIT – SLUDGE SEDIMENTATION BASINS
CLOVER POWER STATION

DSGN CA	DSGN SUPV	DATE FEBRUARY 2016 DGNSPEC FOR FILE VERIFICATION	
DRWN BZ	ENGR SUPV	DRAWING NO. 66706-15348-CWSG-S6203	REV. 1
CHKD CA	PROJ ENGR		
DISPL ENGR XXX	SCALE: 3/8"=1'-0"	UNLESS OTHERWISE NOTED	SH 32 OF 41

E:\Work\15\00.00 - All Sites\00\Drawings\Clover\S6203 - Typical Sections and Details.dwg 11/14/2016 8:14:22 AM

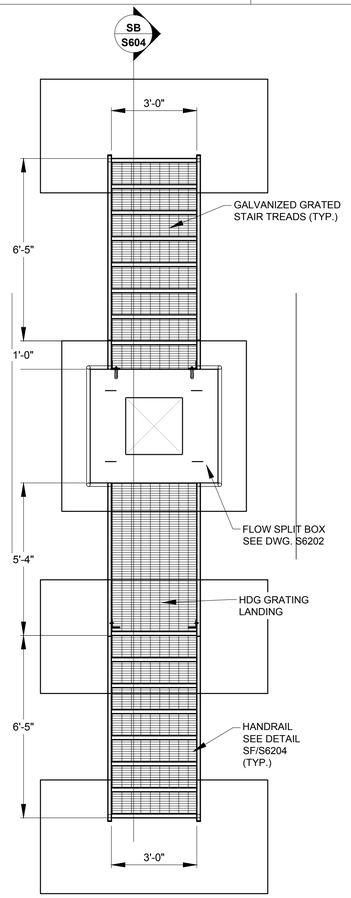

SA S6204 FLOW SPLIT BOX STAIR AND LANDING PLAN

SCALE: 3/8" = 1'-0"

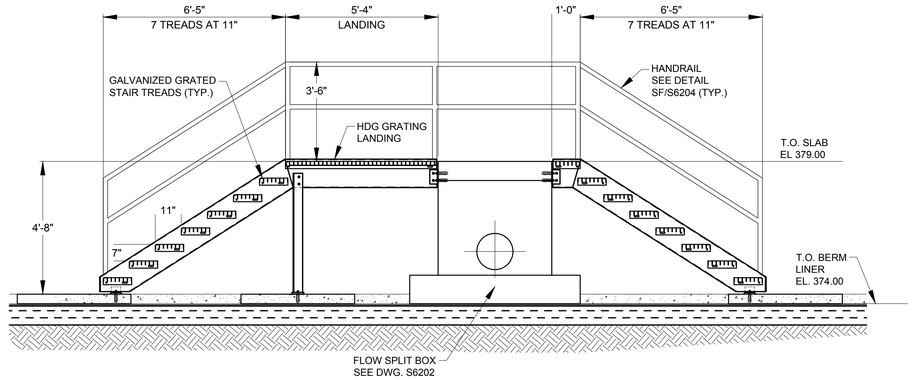

SB S6204 FLOW SPLIT BOX STAIR AND LANDING SECTION

SCALE: 3/8" = 1'-0"

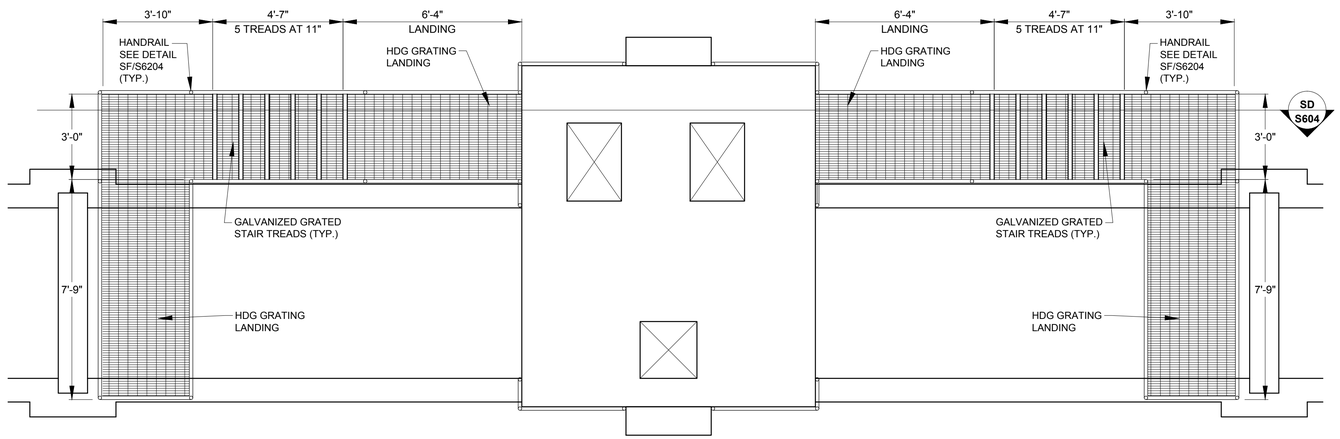

SC S6204 SLUDGE PUMP STATION STAIR AND LANDING PLAN

SCALE: 3/8" = 1'-0"

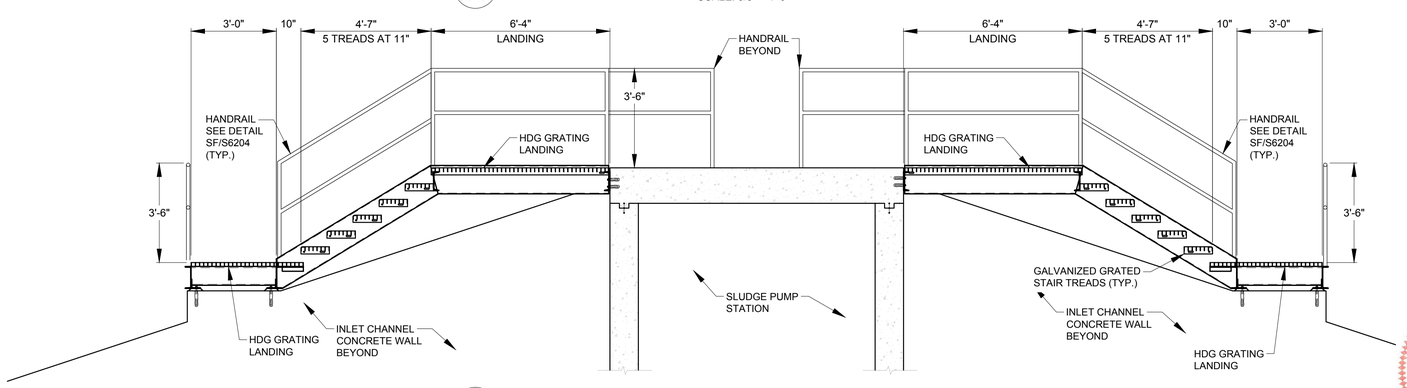

SD S6204 SLUDGE PUMP STATION STAIR AND LANDING SECTION

SCALE: 3/8" = 1'-0"

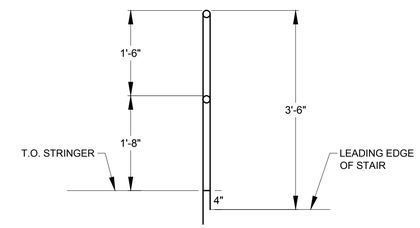

SF S6204 TYPICAL STAIR RAILING DETAIL

SCALE: 3/4" = 1'-0"

NOTES:

1. ALL GRATING IS HOT DIPPED GALVANIZED (HDG). ALL HDG SUPPORTS AND FRAMES, HANDRAILS, STAIRS AND LADDERS SHALL BE HOT DIPPED GALVANIZED STEEL IN ACCORDANCE WITH SPECIFICATION 05205.
2. SUBMIT SHOP DRAWINGS AND DETAILS FOR ALL HDG GRATING FOR ENGINEER REVIEW AND APPROVAL. INCLUDE ALL CONNECTIONS, WELDS, BOLTS, ANCHORS, ASSEMBLIES, AND CALCULATIONS INCLUDING REACTIONS AT CONNECTIONS WITH CONCRETE. REFERENCE SPECIFICATIONS 05205 AND 05511.
3. DESIGN CRITERIA:

3.1 IBC 2009
3.2 USE F-2
3.3 LIVE LOAD, GRATING 100 PSF
3.4 LIVE LOAD, BEAMS 1,000 LBS POINT LOAD CENTER OF BEAM
3.5 DEAD LOAD, ICE 2.0 IN ALL MEMBERS AND SURFACE AREA LOADS
3.6 ANALYSIS PROCEDURE LRFD IBC 2009 LOAD COMBINATIONS
3.6 SEISMIC
3.6.1 SS 0.124G
3.6.2 SI 0.052G
3.6.3 SDS 0.132G
3.6.4 SD1 0.084G

4. SUPPORT BRACKETS, KNEE BRACING, OR COLUMNS ARE NOT PERMITTED AT PUMP STATION. CANTILEVER PLATFORM AND SUPPORT WITH MOMENT CONNECTIONS.
5. ALL WELDS MINIMUM 1/4" E70XX.

COMMONWEALTH OF VIRGINIA
11.16.16
BRODERICK C. ATTRA
Lic. No. 55325
PROFESSIONAL ENGINEER

Dominion TRC

POWER GENERATION ENGINEERING
RICHMOND, VIRGINIA

STRUCTURAL/ARCHITECTURAL
SECTIONS & DETAILS
RETROFIT – SLUDGE SEDIMENTATION BASINS
CLOVER POWER STATION

REV	DATE	DSGN	DRWN	CHKD	DSGN SUPV	PROJ ENGR	CIVIL ENGR	ELEC ENGR	MECH ENGR	ARCH	E.M. ENGR	I&C ENGR	REVISED LINER SYSTEM
1	11 16 2016	CA	BZ	CA	NA								

REV	DATE	DSGN	DRWN	CHKD	DSGN SUPV	PROJ ENGR	CIVIL ENGR	ELEC ENGR	MECH ENGR	ARCH	E.M. ENGR	I&C ENGR	BID SET
0	04 01 2016	CA	BZ	CA									

DSGN	CA	DSGN SUPV	DATE FEBRUARY 2016 DGNSPEC FOR FILE VERIFICATION
DRWN	BZ	ENGR SUPV	DRAWING NO. 66706–15348–CWSG–S6204
CHKD	CA	PROJ ENGR	REV. 1
DISPL ENGR	XXX	SCALE: 3/8"=1'–0"	UNLESS OTHERWISE NOTED

SH 33 OF 41

E:\Drive15\06.00 - Mt Storm\06\ Drawings\Clover\S6204 - Stair Sections.dwg, 11/14/2016 8:14:34 AM

PLAN LEGEND

- JUNCTION OR CONNECTION BOX
- STARTER OR LIGHTING CONTACTOR
- DISCONNECT SWITCH
- STARTER OR LIGHTING CONTACTOR
- MH — MANHOLE
- HH — HANDHOLD
- 1 — KEYED NOTE. NUMBER MATCHES NOTE NUMBER
- $ — TOGGLE SWITCH, WALL MOUNTED, SINGLE POLE SINGLE THROW,. MOUNTED 54" AFF UNLESS OTHERWISE NOTED
- $3 — TOGGLE SWITCH, WALL MOUNTED, THREE WAY. MOUNTED 54" AFF UNLESS OTHERWISE NOTED
- $4 — TOGGLE SWITCH, WALL MOUNTED, FOUR WAY. MOUNTED 54" AFF UNLESS OTHERWISE NOTED
- $M — SWITCH MOTOR RATED WITH THERMAL OVERLOADS
- TERMINAL BOARD
- TELEPHONE OUTLET, PRIVATE. MOUNTED 12" AFF
- 10 — MOTOR LOAD, NUMBER INDICATES HORSEPOWER
- POLE
- TRANSFORMER, DRY TYPE, KVA RATING MAY BE DISPLAYED NEXT TO SYMBOL
- ANTENNA
- HOMERUN. LETTERS INDICATE PANELBOARD, NUMBERS INDICATE CIRCUIT NUMBER IN PANELBOARD
- DEMO CONDUIT
- CONDUIT CAPPED FOR FUTURE USE
- CONDUIT GOING DOWN
- CONDUIT GOING UP
- CONDUIT
- CONDUIT RUN UNDERGROUND OR CONCEALED
- LIQUID TIGHT FLEXIBLE CONDUIT
- 120V RECEPTACLE FLUSH MOUNTED
- 120V RECEPTACLE SURFACE MOUNTED
- 250V RECEPTACLE FLUSH MOUNTED
- 250V RECEPTACLE SURFACE MOUNTED
- WELDING OUTLET
- T — THERMOSTAT
- DATA OUTLET. MOUNTED 12" AFF
- PANELBOARD SURFACE MOUNTED
- PANELBOARD FLUSH MOUNTED
- N — NORTH ARROW
- TS — TORQUE SWITCH
- SV — SOLENOID VALVE
- LS — LIMIT SWITCH
- AS — AMMETER SWITCH
- VS — VOLTMETER SWITCH
- PS — PRESSURE SWITCH
- LC — LIGHTING CONTACTOR
- PC — PHOTOCELL
- EQUIPMENT CONNECTION

ONE LINE AND CONTROL SCHEMATIC LEGEND

- GROUND CONNECTION
- NORMALLY OPEN RELAY OR CONTACTOR CONTACTS
- NORMALLY CLOSED RELAY OR CONTACTOR CONTACTS
- CONDUCTOR CONNECTION
- CIRCUIT BREAKER, MOLDED CASE, TRIP CURRENT AND QUAUNTITY OF POLES (P) SHOWN NEXT TO SYMBOL
- DISCONNECT SWITCH NON-FUSED, LOAD BREAK. CONTINUOUS CURRENT RATING AND QUAUNTITY OF POLES (P) SHOWN NEXT TO SYMBOL
- DISCONNECT SWITCH FUSED, LOAD BREAK. CONTINUOUS CURRENT RATING, QUAUNTITY OF POLES (P), AND FUSE RATING SHOWN NEXT TO SYMBOL
- FUSE. RATING SHOWN NEXT TO SYMBOL
- MOTOR STARTER THERMAL OVERLOAD PROTECTOR
- CR12 — CONTACTOR OR RELAY COIL. LETTERS AND NUMBERS MATCH CONTACTS CONTROLLED
- LIMIT SWITCH NORMALLY CLOSED
- LIMIT SWITCH NORMALLY OPEN
- MOTOR OPERATED VALVE GEARED LIMIT SWITCH
- PRESSURE SWITCH NORMALLY CLOSED OPENS ON INCREASING PRESSURE
- PRESSURE SWITCH NORMALLYOPEN CLOSES ON INCREASING PRESSURE
- LEVEL SWITCH NORMALLY CLOSED OPENS ON INCREASING LEVEL
- LEVEL SWITCH NORMALLY OPEN CLOSES ON INCREASING LEVEL
- FLOW SWITCH NORMALLY CLOSED OPENS WITH FLOW
- FLOW SWITCH NORMALLY OPEN CLOSES ON LOSS OF FLOW
- SPACE HEATER
- ØF — PHASE FAILURE RELAY
- START / STOP — MAINTAINED CONTACT START/STOP PUSHBUTTON
- OFF / HAND / AUTO — MAINTAINED CONTACT HAND OFF AUTOMATIC SELECTOR SWITCH
- NORMALLY CLOSED MOMENTARY CONTACT PUSHBUTTON
- NORMALLY OPEN MOMENTARY CONTACT PUSHBUTTON
- WYE — WYE TRANSFORMER CONNECTION
- DELTA — DELTA TRANSFORMER CONNECTION
- 600:5 — CURRENT TRANSFORMER WITH RATIO SHOWN
- MOV — MOTOR OPERATED VALVE
- SV — SOLENOID VALVE
- ETM — ELAPSED TIME METER
- TD 0-10 MIN. TOE — TIME DELAY RELAY. TIMES OUT AFTER ENERGIZATION. ADJUSTABLE TIME DELAY TIME INDICATED NEXT TO SYMBOL
- TD 0-10 MIN. TOD — TIME DELAY RELAY. TIMES OUT AFTER DENERGIZATION. ADJUSTABLE TIME DELAY TIME INDICATED NEXT TO SYMBOL
- R — PILOT LIGHT R=RED B=BLUE G=GREEN A=AMBER Y=YELLOW
- 480V / 120V — CONTROL POWER TRANSFORMER. PRIMARY AND SECONDARY VOLTAGES INDICATED
- INSTRUMENT TRANSFORMER PT-POTENTIAL TRANSFORMER
- 15KVA 480V / 120/240V — POWER TRANSFORMER. VOLTAGE AND KVA RATING AS SHOWN
- LA — LIGHTNING ARRESTOR
- CAP — SURGE CAPACITOR
- A — AMMETER
- V — VOLTMETER
- AS — AMMETER SWITCH
- VS — VOLTMETER SWITCH
- MCP / SIZE 1 / FVNR — MOTOR STARTER FVNR=FULL VOLTAGE NON-REVERSING
  - VFD=VARIABLE FREQUENCY DRIVE
  - RVSS=REDUCED VOLTAGE SOFT START
  - RVNR=REDUCED VOLTAGE NON-REVERSING
  - FVR=FULL VOLTAGE REVERSING
  - MCP=MOTOR CIRCUIT PROTECTOR
  - SIZE=NEMA STARTER SIZE

GROUNDING LEGEND

- A = GROUNDING RECEPTACLE, B = GROUND TEST WELL
- B — BARE COPPER GROUNDING CONDUCTOR
- GROUNDING CONNECTION
- COPPER CLAD GROUND ROD

LIGHTING FIXTURE LEGEND

1. LETTER IN OR BESIDE FIXTURE IDENTIIFIES FIXTURE IN FIXTURE SCHEDULE

- D — FLUORESCENT FIXTURE
- D — FLUORESCENT FIXTURE WITH BATTERY BACKUP
- D — FIXTURE, SURFACE OR SUSPENDED, CEILING MOUNTED
- D — FIXTURE, STANCHION MOUNTED
- E1 — LIGHTED EXIT SIGN, ARROWS DENOTE DIRECTION OF EGRESS ON EACH SIDE OF FIXTURE. NO ARROW DENOTES NO DIRECTION OF EGRESS
- D — REMOTE EMERGENCY LIGHTS
- E2 — EMERGENCY LIGHT FIXTURE SELF CONTAINED BATTERY OPERATED
- D — PAR LAMP HOLDER. NUMBER OF TRIANGLES INDICATES NUMBER OF FIXTURES
- D — POLE MOUNTED FLOODLIGHT. NUMBER OF TRIANGLES INDICATES NUMBER OF FIXTURES. ARROW DENOTES FOLDING POLE AND DIRECTION POLE FOLDS DOWN

LEGEND NOTES:

1. BRANCH CIRCUIT NUMBERS MAY BE SHOWN NEXT TO SYMBOLS IN MULTIWIRE CIRCUITS
2. SYMBOL SIZE DOES NOT IMPLY EQUIPMENT SIZE UNLESS OTHERWISE NOTED
3. LOWER CASE LETTERS NEXT TO SYMBOLS INDICATE FIXTURE(S) CONTROLLED BY THE SWITCH DISPAYING THE SAME LETTER
4. THIS IS A STANDARD LEGEND LIST ALL SYMBOLS MAY NOT BE USED

ABBREVIATIONS

A	AMPERES OR TRIP AMPERES
AC	ALTERNATING CURRENT
A/C	AIR CONDITIONING
AFF	ABOVE FINISHED FLOOR
AFG	ABOVE FINISHED GRADE
AIC	SYMMETRICAL AMPERES INTERRUPING CAPACITY
AWG	AMERICAN WIRE GAUGE
BLDG	BLDG
BKR	BREAKER
C	CONDUIT
CAP	CAPACITOR
CKT	CIRCUIT
CONT'D	CONTINUED
CPT	CONTROL POWER TRANSFORMER
CT	CURRENT TRANSFORMER
CU	COPPER
DBL	DOUBLE
DISC SW	DISCONNECT SWITCH
DC	DIRECT CURRENT
EMER	EMERGENCY
EMT	ELECTRICAL METALLIC TUBING
ENCL	ENCLOSURE
EP	EXPLOSION PROOF
EQUIP	EQUIPMENT
G	GROUND WIRE
GALV	GALVANIZED
GEN	GENERATOR
GFI	GROUND FAULT INTERRUPTER CIRCUIT
GND	GROUND
HDG	HOT DIPPED GALVANIZED
HPS	HIGH PRESSURE SODIUM
HT	HEIGHT
HZ	HERTZ
INST	INSTRUMENT
KV	KILOVOLTS
KVA	KILOVOLT AMPERES
KWH	KILOWATT HOURS
LA	LIGHTNINIG ARRESTOR
L-L	LINE TO LINE
L-N	LINE TO NEUTRAL
MCC	MOTOR CONTROL CENTER
MFR	MANUFACTURER
MIN	MINIMUM
MTD	MOUNTED
MTG	MOUNTING
MRCT	MULTI-RATIO CURRENT XFMR
MV	MERCURY VAPOR
N.C.	NORMALLY CLOSED
NEC	NATIONAL ELECTRICAL CODE
NEMA	NATIONAL ELECTRICAL MANUTFACTURER'S ASSOCIATION
NEUT	NEUTRAL
N.O.	NORMALLY OPEN
NTS	NOT TO SCALE
OC	ON CENTER
OH	OVERHEAD
P	POLE
PC	PHOTOCELL
PNL	PANEL
PRI	PRIMARY
PVC	POLYVINYL CHLORIDE
REQ'D	REQUIRED
SCH	SCHEDULE
SEC	SECONDARY
S/N	SOLID NEUTRAL
SPACE	SPACE(S) ONLY NO BREAKER OR DEVICE
SPARE	SPARE BREAKER OR DEVICE
SPECS	SPECIFICATIONS
S.D. BARE	SOFT DRAWN BARE
SS HDWE	STAINLESS STEEL HARDWARE
SWBD	SWITCHBOARD
SWGR	SWITCHGEAR
TB	TERMINAL BLOCK
TYP	TYPICAL
UL	UNDERWRITERS LABORATORIES
V	VOLTS
VA	VOLT AMPERES
W	WATTS
W/	WITH
W/O	WITHOUT
WP	WEATHERPROOF
XFMR	TRANSFORMER
□	PHASE
1/C	ONE CONDUCTOR
3/C	THREE CONDUCTOR

COMMONWEALTH OF VIRGINIA
CONNER BIB STURDIVANT
Lic. No. 402055449
PROFESSIONAL ENGINEER
11/16/16

CLEARY ZIMMERMANN ENGINEERS
1344 S. Flores, Suite 101
San Antonio, Texas 78204
T 210.447.6100 / F 210.447.6101
ClearyZimmermann.com

Dominion — TRC

POWER GENERATION ENGINEERING
RICHMOND, VIRGINIA

ELECTRICAL SYMBOLS AND ABBREVIATIONS
RETROFIT – SLUDGE SEDIMENTATION BASINS
CLOVER, VIRGINIA

DSGN	CSTUR	DSGN SUPV	DATE APRIL 2016 DGNSPEC FOR FILE VERIFICATION
DRWN	CONNERS	ENGR SUPV	DRAWING NO. 66706-15348-CWSG-E1001 — REV. 1
CHKD	JCLEARY	PROJ ENGR	
DISPL ENGR	XXX	SCALE: AS NOTED	UNLESS OTHERWISE NOTED — SH 34 OF 41

REV	DATE	DSGN	DRWN	CHKD	DSGN SUPV	PROJ ENGR	CIVIL ENGR	ELEC ENGR	MECH ENGR	ARCH	E.M. ENGR	I&C ENGR
1	11 16 2016	DM	LLS	JNH		NA	RKN	CS	DS			
0	04 08 2016	JDS	TRC	HCB		NA	RKN	CS	DS			

1 REVISED LINER SYSTEM

0 ISSUED FOR BID

KEYED NOTES:

1. DEMO FEEDERS SERVING SLUDGE PUMPS 2A & 2B BACK TO MCC-114. DEMO MOTOR HEATER CONDUCTORS BACK TO PANEL "CAPB-PPL-1141". DEMO HEAT TRACE FEEDERS SERVING SLUDGE PUMPS BACK TO FREEZE PROTECTION PANEL CEEA-PL-12. DEMO LT-3 & LT-4 TRANSDUCER SIGNAL CABLES BACK TO I/0 CAB 446.
2. DEMO EXISTING DUCT BANK CDB49 IN ITS ENTIRETY BACK TO ELECTRICAL MANHOLE EMH-23. BOTTOM OF DUCT BANK AT MANHOLE ENTRANCE IS AT ELEVATION 368.5
3. DEMO HEAT TRACE FEEDERS SERVING FLOW SPLITTER BOX PIPING BACK TO FREEZE PROTECTION PANEL CEEA-PL-12.
4. RELOCATE EXISTING LIGHT POLE WITH NEW CONCRETEFOUNDATION. EXTEND EXISTING LIGHTING CIRCUIT TO NEW POLE LOCATION.
5. EXISTING PUMP STATION TO BE DEMOLISHED.
6. EXISTING FLOW SPLIT BOX TO BE DEMOLISHED.
7. EXISTING ELECTRICAL DUCT BANK CDB46. BOTTOM OF DUCT BANK AT MANHOLE IS AT ELEVATION 369.5.
8. EXISTING ELECTRICAL DUCT BANK CDB99. BOTTOM OF DUCT BANK AT MANHOLE IS AT ELEVATION 369.5.
9. EXISTING ELECTRICAL DUCT BANK CDB47. BOTTOM OF DUCT BANK AT MANHOLE IS AT ELEVATION 370.5.

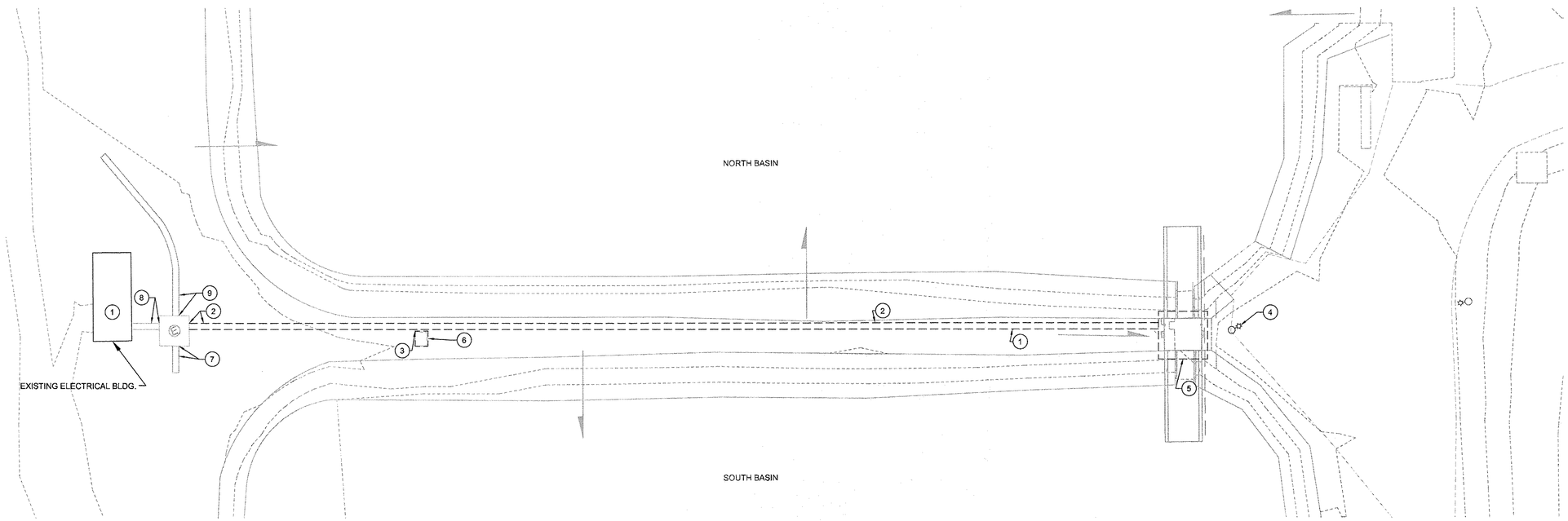

ELECTRICAL SITE PLAN-DEMO

SCALE: 1"=20'

0 20 40 60 80
SCALE IN FEET

COMMONWEALTH OF VIRGINIA
CONNER BIB STURDIVANT
Lic. No. 402055449
PROFESSIONAL ENGINEER
11/16/16

CLEARY ZIMMERMANN ENGINEERS
1344 S. Flores, Suite 101
San Antonio, Texas 78204
T 210.447.6100 / F 210.447.6101
ClearyZimmermann.com

Dominion™ TRC

POWER GENERATION ENGINEERING
RICHMOND, VIRGINIA

ELECTRICAL SITE PLAN–DEMO

RETROFIT – SLUDGE SEDIMENTATION BASINS
CLOVER, VIRGINIA

DSGN	CSTUR	DSGN SUPV		DATE APRIL 2016 DGNSPEC FOR FILE VERIFICATION	
DRWN	CONNERS	ENGR SUPV		DRAWING NO.	REV.
CHKD	JCLEARY	PROJ ENGR		66706–15348–CWSG–E1002	1
DISPL ENGR	XXX	SCALE: AS NOTED	UNLESS OTHERWISE NOTED		SH 35 OF 41

REV	DATE	DSGN	DRWN	CHKD	DSGN SUPV	PROJ ENGR	CIVIL ENGR	ELEC ENGR	MECH ENGR	ARCH	E.M. ENGR	I&C ENGR
1	11 16 2016	DM	LLS	JNH		NA	RKN	CS	DS			
0	04 08 2016	JDS	TRC	HCB		NA	RKN	CS	DS			

1 REVISED LINER SYSTEM

0 ISSUED FOR BID

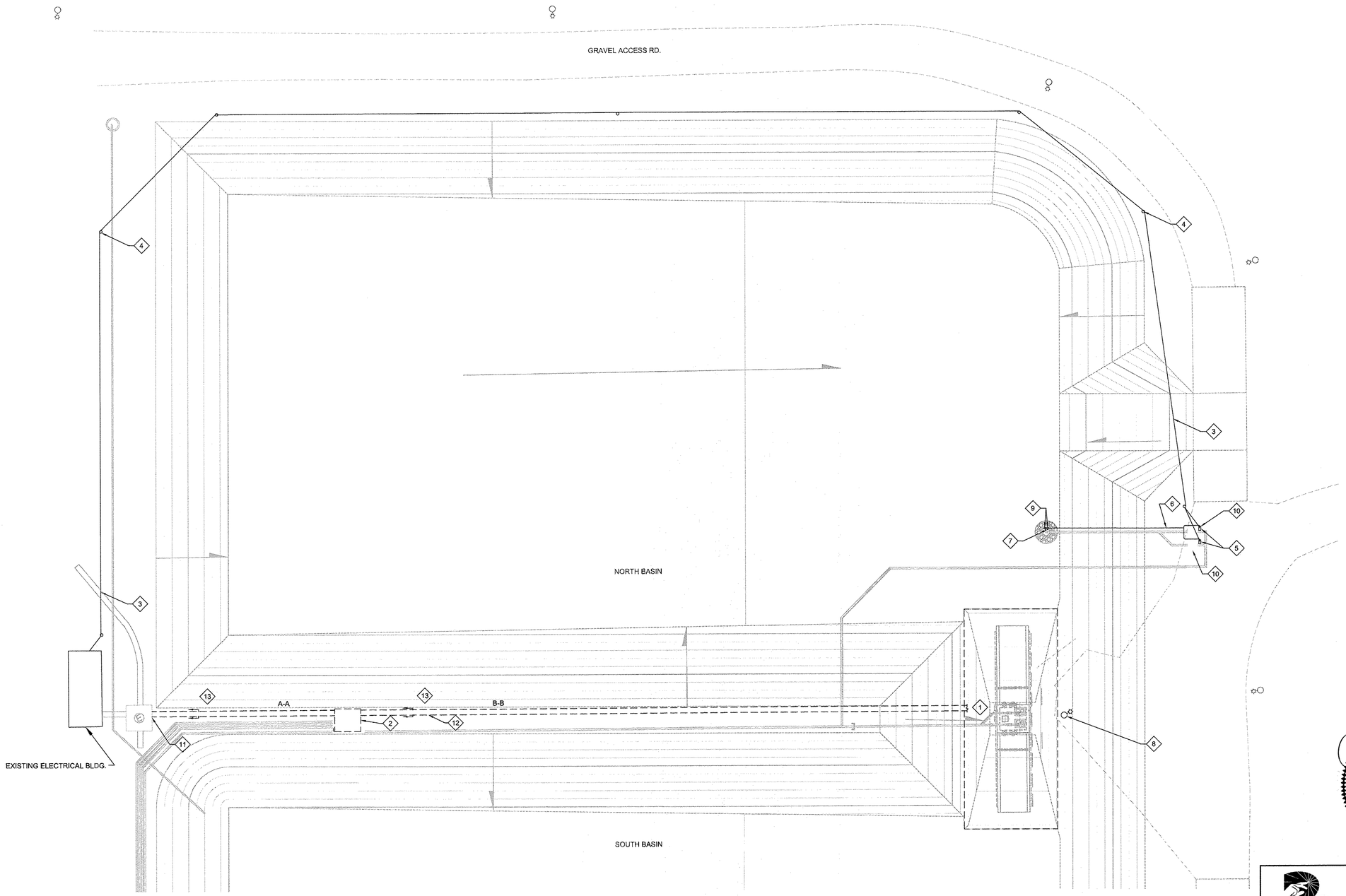

ELECTRICAL SITE PLAN

SCALE: 1"=20'

0 20 40 60 80
SCALE IN FEET

KEYED NOTES:

1. PROPOSED PUMP STATION RE: SHEET E1005 FOR CONTINUATION.
2. PROPOSED FLOW SPLIT BOX. RE: SHEET E1005 FOR CONTINUATION.
3. (2) 4/0 TRIPLEX AERIAL CONDUCTORS (TEMPORARY PUMP FEEDERS). AERIAL CONDUCTORS SHALL BE REMOVED
4. CONTRACTOR SHALL PROVIDE MINIMUM 25 FT. POLES FOR ROUTING TEMPORARY PUMP FEEDERS AROUND SLUDGE PONDS. POLES SHALL BE SPACED MAXIMUM OF 150 FT. POLE TO POLE. POLES AND CONDUCTORS SHALL BE REMOVED PENDING SATISFACTORY OPERATION OF PROPOSED SLUDGE PUMP STATION.
5. TEMPORARY PUMP CONTROL PANEL W/STARTER IN NEMA 4X ENCLOSURE. TEMPORARY PUMP SHALL BE REMOVED PENDING SATISFACTORY OPERATION OF PROPOSED SLUDGE PUMP STATION.
6. (2)-3/4"C- EA. W/ 8#14 (HIGH LEVEL, PUMP START/STOP, LOW LEVEL SHUT OFF FOR EACH PUMP)
7. FLOAT SWITCHES IN WET WELL (9) FOR AUTOMATIC PUMP OPERATION.
8. RELOCATE EXISTING SITE LIGHTING POLE/FIXTURE. EXTEND EXISTING LIGHTING CIRCUIT TO NEW FIXTURE LOCATION.
9. PUMP FLOAT SWITCH J-BOX. RE: TYPICAL FLOAT SWITCH J-BOX INSTALLATION DETAIL.
10. PROPOSED TEMPORARY PUMP STATION.
11. PROPOSED ELECTRICAL DUCT BANK CDB49. BOTTOM OF DUCT BANK AT INLET TO ELECTRICAL MANHOLE EMH-23 IS AT ELEVATION 368.5'. RE: DOMINION FOSSIL AND HYDRO DESIGN CONTROL PROGRAM - FOSSIL AND HYDRO ENGINEERING; INSTALLATION SPECIFICATION FOR ELECTRICAL CONSTRUCTION STANDARD NO: STD-EDF-1.110 ATTACHMENT 7.6 "TYPICAL METHODS OF TERMINATING CONDUITS AND DUCT BANKS IN WALLS OF MANHOLES AND BUILDINGS"-SKETCH S1110S62.PCX FOR TERMINATION REQUIREMENTS.
12. CONTRACTOR SHALL SLOPE PROPOSED ELECTRICAL DUCT BANK FROM ELECTRICAL MANHOLE INLET ELEV. OF 368.5' TO 371' AT PROPOSED PUMP STATION ELECTRICAL RISER BOX. RE: SHEET E1005. (RE: DOMINION FOSSIL AND HYDRO DESIGN CONTROL PROGRAM - FOSSIL AND HYDRO ENGINEERING; INSTALLATION SPECIFICATION FOR ELECTRICAL CONSTRUCTION STANDARD NO: STD-EDF-1.110 ATTACHMENT 7.6 FOR ADDITIONAL ELECTRICAL DUCT BANK REQUIREMENTS).
13. RE: SHEET E1007 FOR ELECTRICAL DUCT BANK SECTIONS.

COMMONWEALTH OF VIRGINIA
CONNER BIB STURDIVANT
Lic. No. 402055449
PROFESSIONAL ENGINEER
11/16/16

CLEARY ZIMMERMANN ENGINEERS
1344 S. Flores, Suite 101
San Antonio, Texas 78204
T 210.447.6100 / F 210.447.6101
ClearyZimmermann.com

Dominion™ TRC

POWER GENERATION ENGINEERING
RICHMOND, VIRGINIA

ELECTRICAL SITE PLAN–PROPOSED

RETROFIT – SLUDGE SEDIMENTATION BASINS
CLOVER, VIRGINIA

REV	DATE	DSGN	DRWN	CHKD	DSGN SUPV	PROJ ENGR	CIVIL ENGR	ELEC ENGR	MECH ENGR	ARCH	E.M. ENGR	I&C ENGR	REVISIONS
1	11 16 2016	DM	LLS	JNH		NA	RKN	CS	DS				REVISED LINER SYSTEM
0	04 08 2016	JDS	TRC	HCB		NA	RKN	CS	DS				ISSUED FOR BID

DSGN	CSTUR	DSGN SUPV	DATE APRIL 2016 DGNSPEC FOR FILE VERIFICATION
DRWN	CONNERS	ENGR SUPV	DRAWING NO. 66706-15348-CWSG-E1003
CHKD	JCLEARY	PROJ ENGR	REV. 1
DISPL ENGR	XXX	SCALE: AS NOTED	UNLESS OTHERWISE NOTED

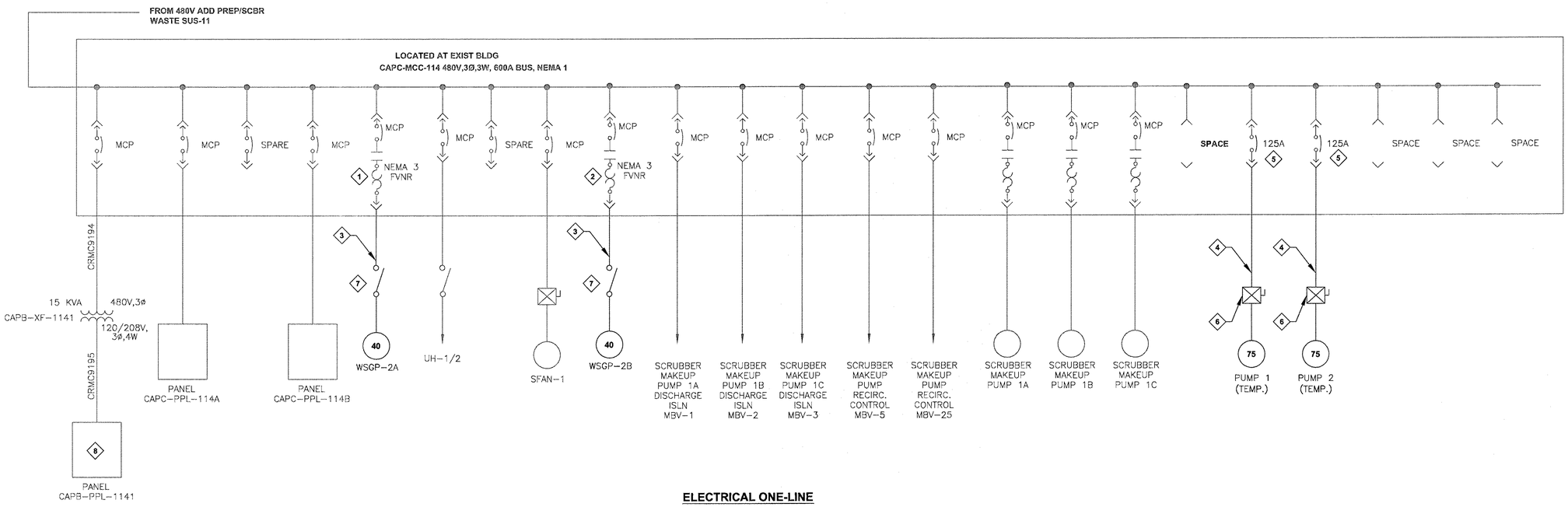

ELECTRICAL ONE-LINE

SCALE: NTS

NOTES

1. EXISTING SLUDGE PUMP 2A MOTOR STARTER. MOTOR STARTER SHALL BE RE-USED FOR PROPOSED PUMP.
2. EXISTING SLUDGE PUMP 2B MOTOR STARTER. MOTOR STARTER SHALL BE RE-USED FOR PROPOSED PUMP.
3. 2"C-3#4, 1#8G (FEEDER TO PROPOSED SLUDGE PUMP).
4. TRIPLEX 4/0 AERIAL PUMP FEEDER. RE: SHEET E1003. TO BE REMOVED PENDING SATISFACTORY OPERATION OF PROPOSED SLUDGE PUMPS.
5. CONTRACTOR SHALL INSTALL 125A BREAKERS IN MCC TO FEED TEMPORARY PUMPS. BREAKER SHALL BE REMOVED WHEN PROPOSED SLUDGE PUMPS ARE OPERATIONAL.
6. TEMPORARY PUMP CONTROL PANEL IN NEMA 4X ENCL. PROVIDED BY TEMPORARY PUMP VENDOR.
7. 600V, 100A, NF, DISCONNECT IN NEMA 4X S.S. ENCL.
8. RE: SHEET E1008 FOR PANEL SCHEDULE MODIFICATIONS.

COMMONWEALTH OF VIRGINIA
CONNER BIB STURDIVANT
Lic. No. 402055449
PROFESSIONAL ENGINEER
11/16/16

CLEARY ZIMMERMANN ENGINEERS
1344 S. Flores, Suite 101
San Antonio, Texas 78204
T 210.447.6100 / F 210.447.6101
ClearyZimmermann.com

Dominion TRC

POWER GENERATION ENGINEERING
RICHMOND, VIRGINIA

ELECTRICAL ONELINE

RETROFIT – SLUDGE SEDIMENTATION BASINS
CLOVER, VIRGINIA

REV	DATE	DSGN	DRWN	CHKD	DSGN SUPV	PROJ ENGR	CIVIL ENGR	ELEC ENGR	MECH ENGR	ARCH	E.M. ENGR	I&C ENGR
1	11 16 2016	DM	LLS	JNH		NA	RKN	CS	DS			
0	04 08 2016	JDS	TRC	HCB		NA	RKN	CS	DS			

1 REVISED LINER SYSTEM
0 ISSUED FOR BID

DSGN	CSTUR	DSGN SUPV	DATE APRIL 2016 DGNSPEC FOR FILE VERIFICATION
DRWN	CONNERS	ENGR SUPV	DRAWING NO. 66706-15348-CWSG-E1004
CHKD	JCLEARY	PROJ ENGR	REV. 1
DISPL ENGR	XXX	SCALE: AS NOTED	UNLESS OTHERWISE NOTED

SH 37 OF 41

CAPC-MCC-114 AND PANEL CAPB-PPL-1141 IN EXISTING ELECTRICAL BUILDING

SCALE: NTS

NOTES

1. EXISTING SLUDGE PUMP 2A MOTOR STARTER. MOTOR STARTER SHALL BE RE-USED FOR PROPOSED PUMP.
2. EXISTING SLUDGE PUMP 2B MOTOR STARTER. MOTOR STARTER SHALL BE RE-USED FOR PROPOSED PUMP.
3. EXISTING PANEL "CAPB-PPL-1141". RE: SHEET E1008 FOR PANEL SCHEDULE.
4. CONTRACTOR SHALL INSTALL 125A BREAKERS IN MCC TO FEED TEMPORARY PUMPS. BREAKER SHALL BE REMOVED WHEN PROPOSED SLUDGE POND PUMPS ARE OPERATIONAL.

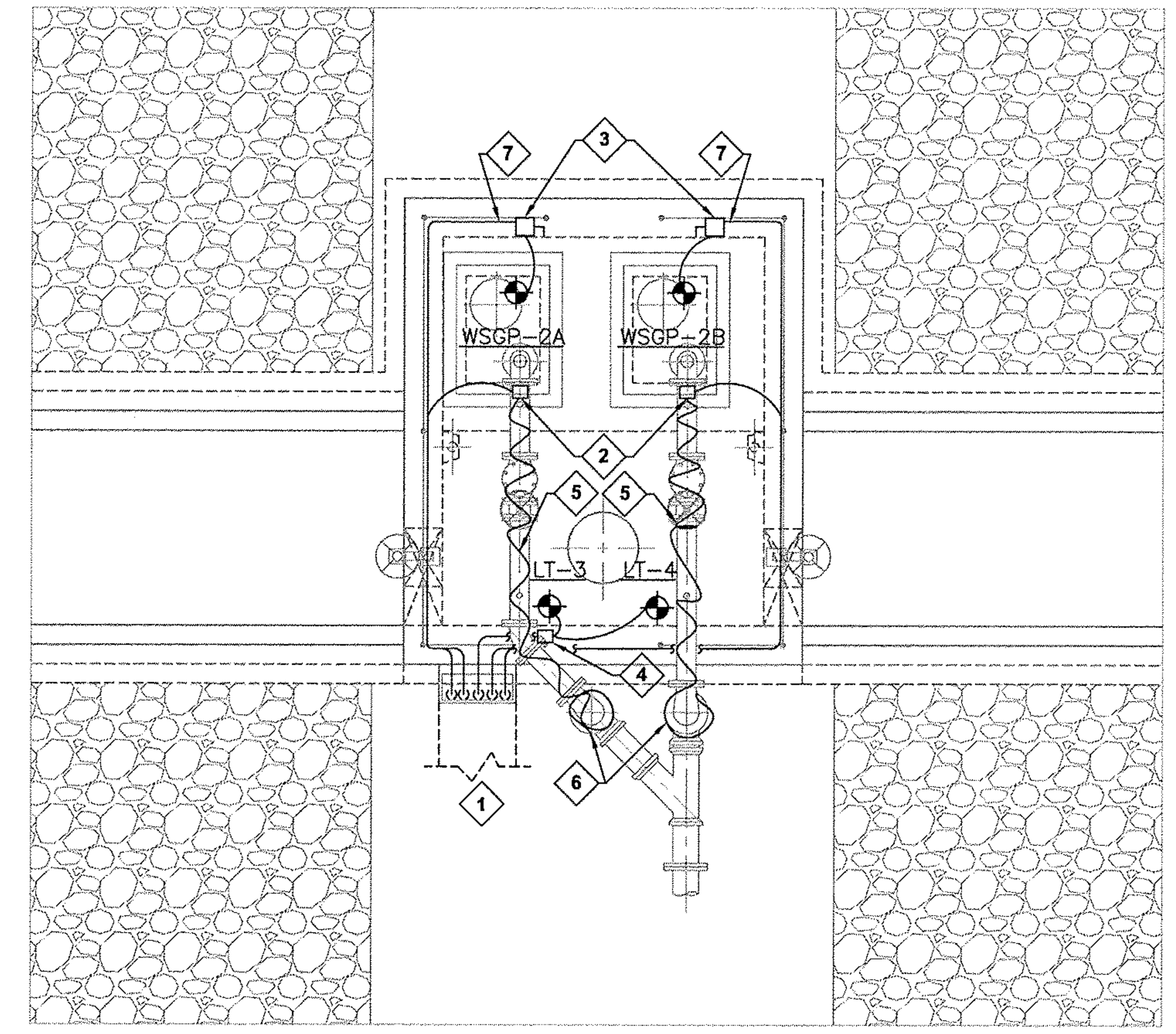

PROPOSED SLUDGE POND PUMP STATION ELECTRICAL PLAN

SCALE: 1/4"=1'-0"

KEYED NOTES: (SLUDGE PUMP STATION ELECTRICAL PLAN ONLY)

1. PROPOSED ELECTRICAL DUCT BANK (CDB49) CONSISTING OF:
   (2)-2"C EA. W/ 3#4, 1#8G (PUMP FEEDERS)
   (2)-2"C-SPARE
   1"C 4#12, 2#12G (PUMP HEATERS)
   1"C 4#10, 2#10G (HEAT TRACE)
   1"C-2 PR. 18 GA., #8760 BELDEN (LEVEL XMITTERS)
   (4)-1"C-SPARE
   RE: SHEET E1003 FOR CONTINUATION.
2. PIPE-MOUNTED, HEAT TRACE DIGITAL THERMOSTAT IN NEMA 4X ENCL. (EQUAL TO CHROMALOX MODEL# DTS-HAZ).
3. 600V, 100A, NF, DISCONNECT IN NEMA 4X S.S. ENCL.
4. NEMA-SIZED J-BOX FOR LEVEL TRANSMITTER CABLING. PROVIDE WITH 12 POLE SLIDING LINK TERMINAL BLOCKS. (RE: DOMINION FOSSIL AND HYDRO DESIGN CONTROL PROGRAM - FOSSIL AND HYDRO ENGINEERING; INSTALLATION SPECIFICATION FOR ELECTRICAL CONSTRUCTION STANDARD NO: STD-EDF-1.110 ATTACHMENT 7.2 "MOUNTING LOCATIONS FOR SLIDING LINK TERMINAL BLOCKS SHEET 1"-SKETCH S1110S21.PCX FOR ADDITIONAL REQUIREMENTS.)
5. HEAT TRACE (SIMILAR TO CHROMALOX MODEL# SRF 8-2C). INSTALL PER MANUFACTURER'S INSTALLATION INSTRUCTIONS. CONTRACTOR SHALL COORDINATE WITH HEAT TRACE VENDOR TO PROVIDE INSPECTION OF HEAT TRACE INSTALLATION PRIOR TO INSTALLATION OF INSULATION. PROVIDE 2" THK. CELLULAR GLASS INSULATION WITH ALUMINUM JACKETING AND STAINLESS STEEL BANDING. INSTALL BANDING AT ALL JACKET JOINTS AND AT INTERVALS OF 18" ON CENTER.
6. ROUTE HEAT TRACE ALONG DISCHARGE PIPING TO A MINIMUM DEPTH OF 3 FT. PROVIDE 2" THK. CELLULAR GLASS INSULATION WITH ALUMINUM JACKETING AND STAINLESS STEEL BANDING FULL-LENGTH OF HEAT TRACE.
7. 2"C-3#4, 1#8G (PUMP FEEDER); 3/4"C-2#12, 1#12G (PUMP HEATER CKT.). ROUTE PUMP HEATER CIRCUIT THRU DISCONNECT TO PUMP.

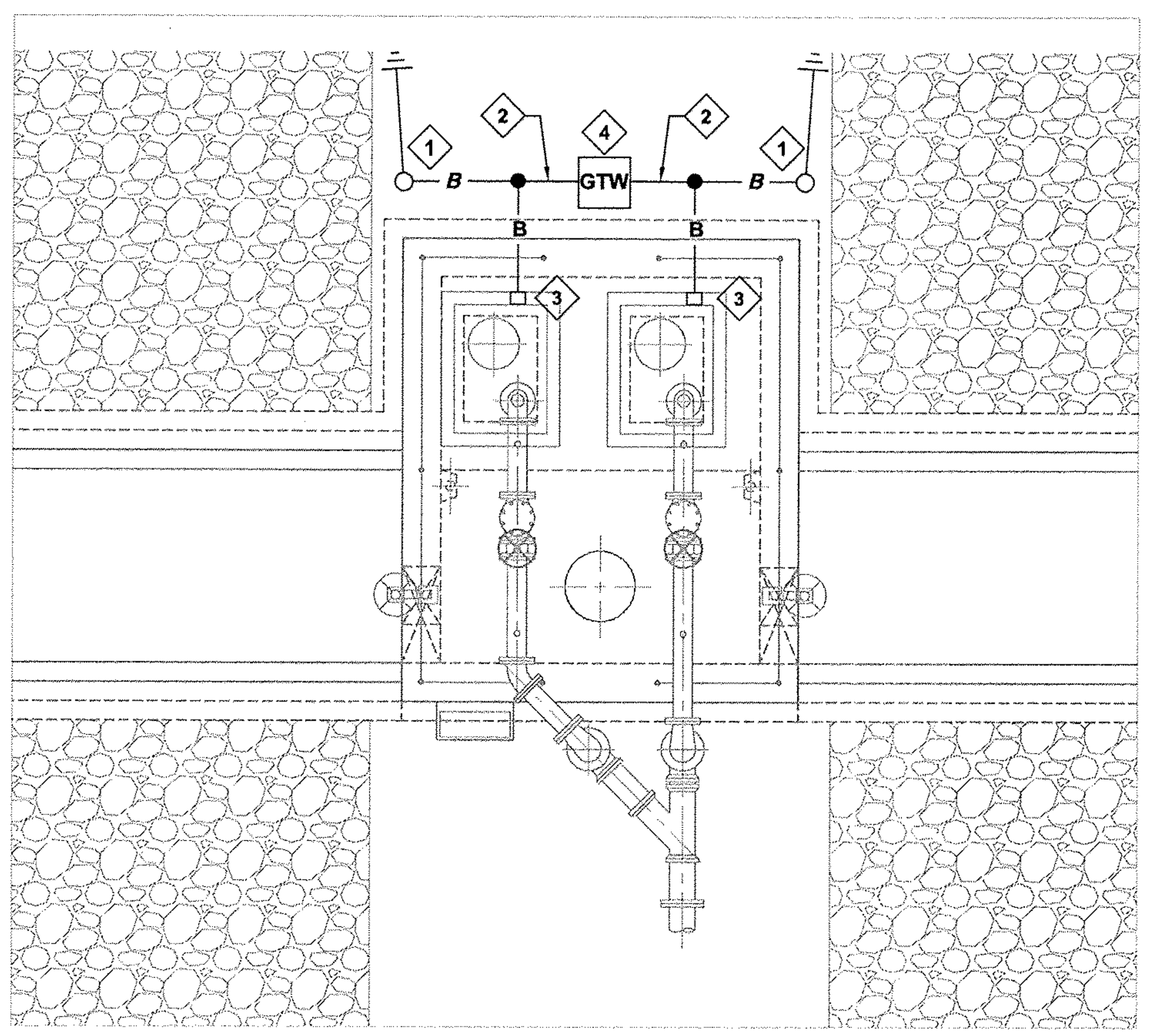

PROPOSED SLUDGE PUMP STATION GROUNDING PLAN

SCALE: 1/4"=1'-0"

GENERAL GROUNDING NOTE:
(RE: DOMINION FOSSIL AND HYDRO DESIGN CONTROL PROGRAM - FOSSIL AND HYDRO ENGINEERING; INSTALLATION SPECIFICATION FOR ELECTRICAL CONSTRUCTION STANDARD NO: STD-EDF-1.110 ATTACHMENT 7.4, 2.0 SPECIFICATIONS FOR GROUNDING FOR ADDITIONAL REQUIREMENTS.)

KEYED NOTES: (GROUNDING PLAN ONLY)

1. 3/4"ØX10' COPPER CLAD GROUND ROD. EXOTHERMICALLY WELD TO GROUND CABLE BURIED MIN 18" BELOW GRADE.
2. #4/0 SOFT DRAWN BARE COPPER CABLE BURIED MIN 18" BELOW GRADE (TYP ALL BELOW GRADE CABLE). EXOTHERMICALLY WELD ALL BELOW GRADE CONNECTIONS EXTEND UP INTO CONTROL PANEL AND GROUND TO GROUND BUS.
3. REFER TO EQUIPMENT CONNECTION TO GROUND MAT DETAIL, SHEET E1006.
4. REFER TO GROUNDING SYSTEM TEST WELL INSTALLATION DETAIL, SHEET E1006.

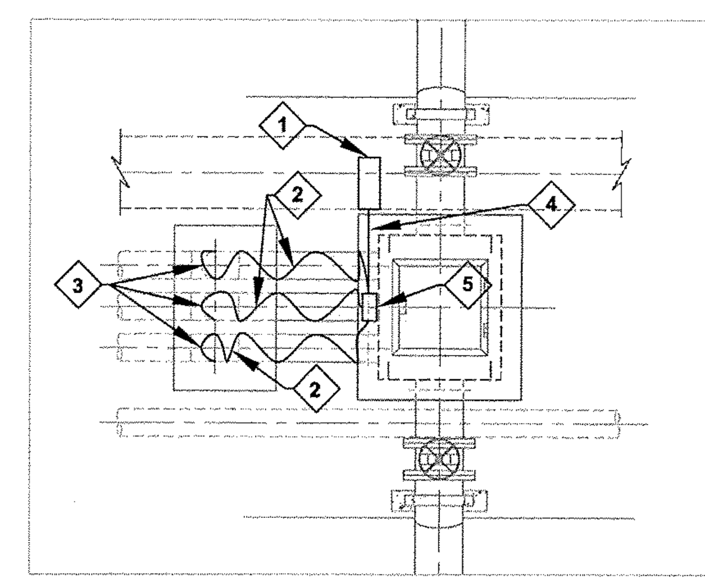

PROPOSED FLOW SPLITTER BOX ELECTRICAL PLAN

SCALE: 3"=1'-0"

KEYED NOTES: (PROPOSED FLOW SPLITTER BOX ELECTRICAL PLAN ONLY)

1. PROPOSED ELECTRICAL DUCT BANK RISER BOX . (RE: DOMINION FOSSIL AND HYDRO DESIGN CONTROL PROGRAM - FOSSIL AND HYDRO ENGINEERING; INSTALLATION SPECIFICATION FOR ELECTRICAL CONSTRUCTION STANDARD NO: STD-EDF-1.110 ATTACHMENT 7.6 "DUCT BANK RISER BOXES"-SKETCH S1110S58.PCX AND "DUCT BANK RISER CONSTRUCTION"-SKETCH S1110S59.PCX FOR REQUIREMENTS.)
2. HEAT TRACE (SIMILAR TO CHROMALOX MODEL# SRF 8-2C). INSTALL PER MANUFACTURER'S INSTALLATION INSTRUCTIONS. CONTRACTOR SHALL COORDINATE WITH HEAT TRACE VENDOR TO PROVIDE INSPECTION OF HEAT TRACE INSTALLATION PRIOR TO INSTALLATION OF INSULATION. PROVIDE 2" THK. CELLULAR GLASS INSULATION WITH ALUMINUM JACKETING AND STAINLESS STEEL BANDING. INSTALL BANDING AT ALL JACKET JOINTS AND AT INTERVALS OF 18" ON CENTER.
3. ROUTE HEAT TRACE ALONG DISCHARGE PIPING TO A MINIMUM DEPTH OF 3 FT. PROVIDE 2" THK. CELLULAR GLASS INSULATION WITH ALUMINUM JACKETING AND STAINLESS STEEL BANDING FULL-LENGTH OF HEAT TRACE.
4. 1"C-2#10, 1#10G (FLOW SPLITTER HEAT TRACE NO.1)
5. PIPE-MOUNTED, HEAT TRACE DIGITAL THERMOSTAT IN NEMA 4X ENCL. (EQUAL TO CHROMALOX MODEL# DTS-HAZ).

COMMONWEALTH OF VIRGINIA
CONNER BIB STURDIVANT
Lic. No. 402055449
PROFESSIONAL ENGINEER
11/16/16

CLEARY ZIMMERMANN ENGINEERS
1344 S. Flores, Suite 101
San Antonio, Texas 78204
T 210.447.6100 / F 210.447.6101
ClearyZimmermann.com

Dominion
TRC

POWER GENERATION ENGINEERING
RICHMOND, VIRGINIA

ELECTRICAL DETAILS AND ENLARGED PLANS
RETROFIT – SLUDGE SEDIMENTATION BASINS
CLOVER, VIRGINIA

DSGN	CSTUR	DSGN SUPV		DATE APRIL 2016 DGNSPEC FOR FILE VERIFICATION	
DRWN	CONNERS	ENGR SUPV		DRAWING NO.	REV.
CHKD	JCLEARY	PROJ ENGR		66706–15348–CWSG–E1005	1
DISPL ENGR	XXX	SCALE: AS NOTED		UNLESS OTHERWISE NOTED	SH 38 OF 41

REV	DESCRIPTION	DATE	DSGN	DRWN	CHKD	DSGN SUPV	PROJ ENGR	CIVIL ENGR	ELEC ENGR	MECH ENGR	ARCH	E.M. ENGR	I&C ENGR
1	REVISED LINER SYSTEM	11 16 2016	DM	LLS	JNH		NA	RKN	CS	DS			
0	ISSUED FOR BID	04 08 2016	JDS	TRC	HCB		NA	RKN	CS	DS			

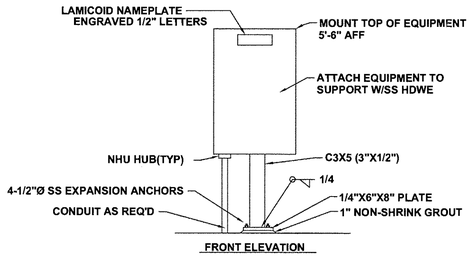

NOTE: HOT DIP GALVANIZE EQUIPMENT SUPPORT AFTER FABRICATION

FLOOR SUPPORTED EQUIPMENT INSTALLATION

NTS

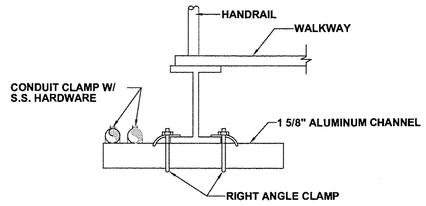

WALKWAY CONDUIT INSTALLATION DETAIL

NTS

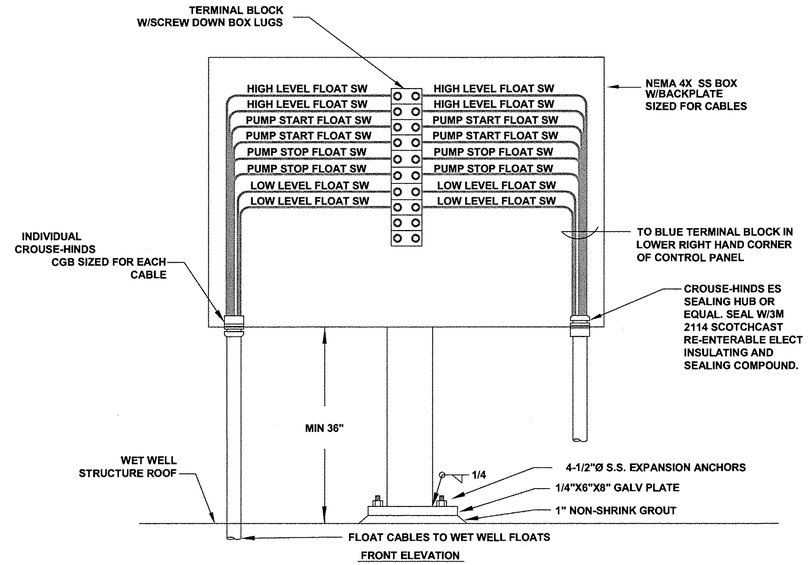

NOTE: 1. FLOAT SWITCH CABLES AND TERMINAL BLOCK TO BE LABELED EXACTLY AS SHOWN IN THIS DETAIL.

TYPICAL FLOAT SWITCH J-BOX INSTALLATION DETAIL

NTS

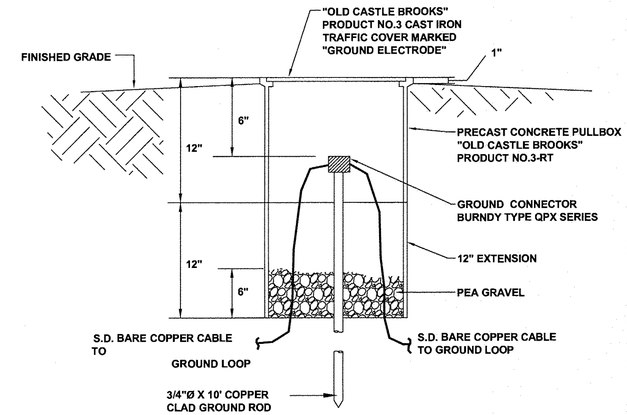

GROUNDING SYSTEM TEST WELL INSTALLATION DETAIL

NTS

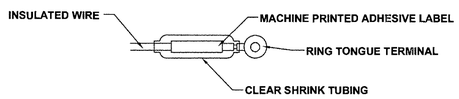

WITH RING TONGUE TERMINAL

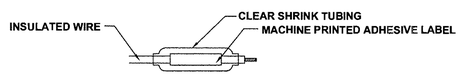

WITHOUT RING TONGUE TERMINAL

WHERE POSSIBLE RING TERMINALS SHALL BE USED. ONE OF THE ABOVE METHODS MUST BE USED ON ALL WIRE #6 AWG & SMALLER. THE SAME MUST ALSO BE USED ON LARGER WIRE UNLESS AN ALTERNATE METHOD IS SUBMITTED & APPROVED.

WIRE TERMINATION AND MARKING DETAIL

NTS

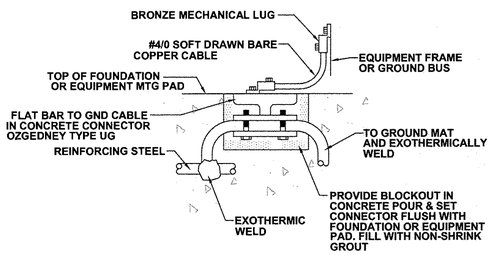

EQUIPMENT CONNECTION TO GROUND MAT DETAIL

NTS

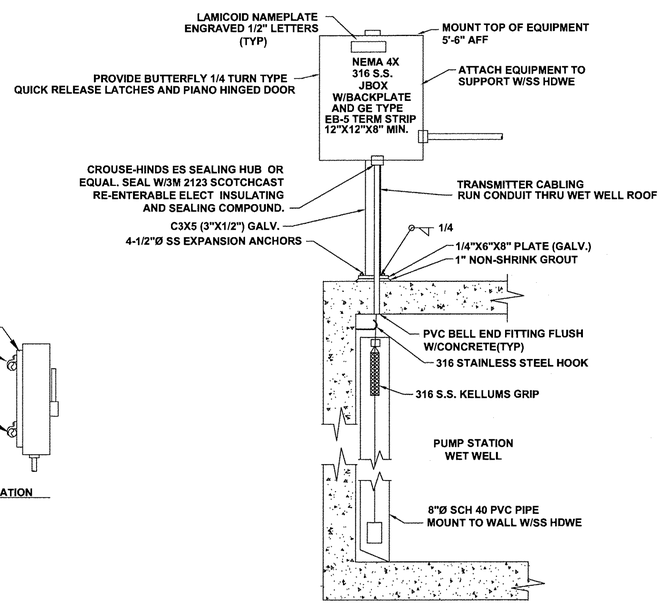

NOTE: 1. EQUIPMENT SUPPORT TO BE FABRICATED AS SHOWN ON DETAILS.
2. LEVEL TRANSMITTER CABLES TO BE LOCATED MAXIMUM 6" FROM HATCH OPENING ON WEST SIDE OF PUMP STATION WET WELL.

WET WELL LEVEL TRANSMITTER/FLOAT SWITCH INSTALLATION DETAIL

NTS

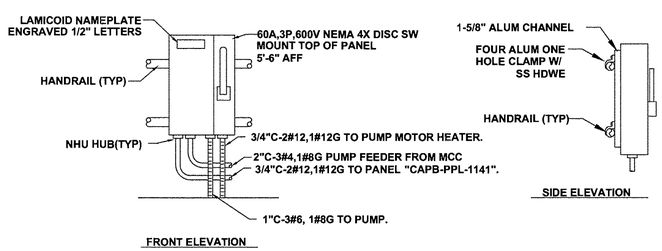

TYPICAL PUMP DISCONNECT INSTALLATION DETAIL

NTS

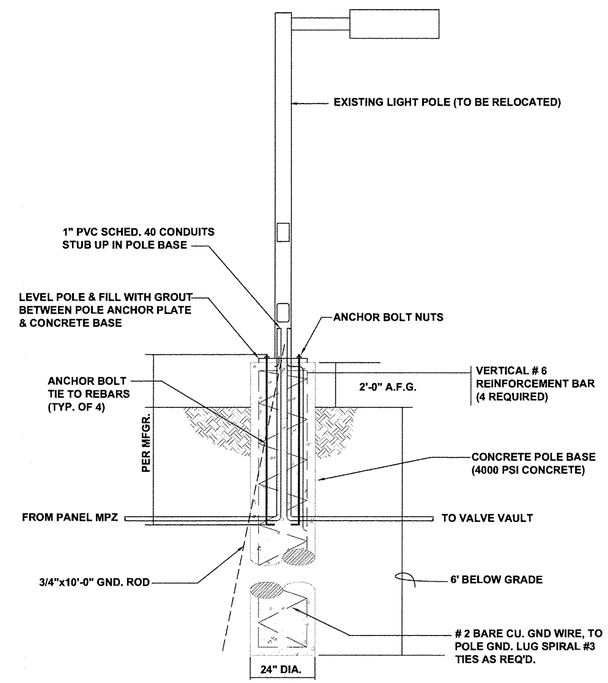

AREA LIGHT POLE FOUNDATION DETAIL

NTS

COMMONWEALTH OF VIRGINIA
CONNER BIB STURDIVANT
Lic. No. 402055449
PROFESSIONAL ENGINEER
11/16/16

CLEARY ZIMMERMANN ENGINEERS
1344 S. Flores, Suite 101
San Antonio, Texas 78204
T 210.447.6100 / F 210.447.6101
ClearyZimmermann.com

Dominion — TRC

POWER GENERATION ENGINEERING
RICHMOND, VIRGINIA

ELECTRICAL DETAILS

RETROFIT – SLUDGE SEDIMENTATION BASINS
CLOVER, VIRGINIA

REV	DATE	DSGN	DRWN	CHKD	DSGN SUPV	PROJ ENGR	CIVIL ENGR	ELEC ENGR	MECH ENGR	ARCH	E.M. ENGR	I&C ENGR	
1	11 16 2016	DM	LLS	JNH		NA	RKN	CS	DS				REVISED LINER SYSTEM
0	04 08 2016	JDS	TRC	HCB		NA	RKN	CS	DS				ISSUED FOR BID

DSGN	CSTUR	DSGN SUPV	DATE APRIL 2016 DGNSPEC FOR FILE VERIFICATION
DRWN	CONNERS	ENGR SUPV	DRAWING NO. 66706-15348-CWSG-E1006 — REV. 1
CHKD	JCLEARY	PROJ ENGR	
DISPL ENGR	XXX	SCALE: AS NOTED	UNLESS OTHERWISE NOTED — SH 39 OF 41

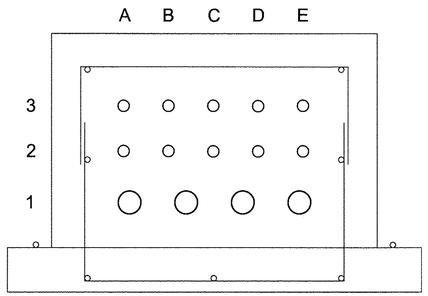

ELECTRICAL DUCT BANK SECTION A-A

NTS

NOTE: RE: DOMINION FOSSIL AND HYDRO DESIGN CONTROL PROGRAM - FOSSIL AND HYDRO ENGINEERING; INSTALLATION SPECIFICATION FOR ELECTRICAL CONSTRUCTION STANDARD NO: STD-EDF-1.110 SKETCH #S1110S61.PCX FOR DETAILED DUCT BANK CONSTRUCTION REQUIREMENTS.

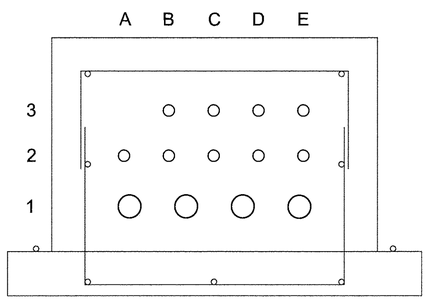

ELECTRICAL DUCT BANK SECTION B-B

NTS

NOTE: RE: DOMINION FOSSIL AND HYDRO DESIGN CONTROL PROGRAM - FOSSIL AND HYDRO ENGINEERING; INSTALLATION SPECIFICATION FOR ELECTRICAL CONSTRUCTION STANDARD NO: STD-EDF-1.110 SKETCH #S1110S61.PCX FOR DETAILED DUCT BANK CONSTRUCTION REQUIREMENTS.

RACEWAY SCHEDULE

REV.	RACEWAY NUMBER	RACEWAY TYPE	RACEWAY DESCRIPTION	FROM EQUIPMENT FLN	TO EQUIPMENT FLN	LENGTH	ALLOWED FILL	ACTUAL FILL	REFERENCE DWGS.	INSTALLED CABLE	REMARKS
R0	EXISTING	EXISTING	EXISTING DUCT BANK CDB99	CAPC–MCC–114	ELECTRICAL MANHOLE EMH–23	30 FT.	N/A	N/A	E1003	DOMINION POWER ASSIGNED CABLE NO.	REFERENCE EXISTING DOMINION POWER DWGS.
	ASSIGNED BY OWNER	PROVIDED BY OWNER	DUCT BANK, 2" PVC, SCH.40 PROP. CDB49	ELECTRICAL MANHOLE EMH–23	PUMP STATION ELECTRICAL RISER BOX	490 FT.	40%	8.2%	E1003, E1006	DOMINION POWER ASSIGNED CABLE NO.	
	ASSIGNED BY OWNER	PROVIDED BY OWNER	1 1/2" RMC	PUMP STATION ELECTRICAL RISER BOX	WSGP–2A DISCONNECT	18 FT.	40%	16.5%	E1003, E1006	DOMINION POWER ASSIGNED CABLE NO.	PUMP POWER AND HEATER CIRCUIT
	ASSIGNED BY OWNER	PROVIDED BY OWNER	3/4" LFMC	WSGP–2A DISCONNECT	WSGP–2A PUMP MOTOR HEATER CONNECTION	4 FT.	40%	10%	E1003	DOMINION POWER ASSIGNED CABLE NO.	PUMP HEATER CIRCUIT
	ASSIGNED BY OWNER	PROVIDED BY OWNER	1 1/2" LFMC	WSGP–2A DISCONNECT	WSGP–2A PUMP MOTOR LEADS	4 FT.	40%	19%	E1003	DOMINION POWER ASSIGNED CABLE NO.	PUMP POWER CIRCUIT
	EXISTING	EXISTING	EXISTING DUCT BANK CDB99	CAPC–MCC–114	ELECTRICAL MANHOLE EMH–23	30 FT.	N/A	N/A	E1003	DOMINION POWER ASSIGNED CABLE NO.	REFERENCE EXISTING DOMINION POWER DWGS.
	ASSIGNED BY OWNER	PROVIDED BY OWNER	DUCT BANK, 2" PVC, SCH.40 PROP. CDB49	ELECTRICAL MANHOLE EMH–23	PUMP STATION ELECTRICAL RISER BOX	490 FT.	40%	8.2%	E1003, E1006	DOMINION POWER ASSIGNED CABLE NO.	
	ASSIGNED BY OWNER	PROVIDED BY OWNER	1 1/2" RMC	PUMP STATION ELECTRICAL RISER BOX	WSGP–2B DISCONNECT	18 FT.	40%	16.5%	E1003, E1006	DOMINION POWER ASSIGNED CABLE NO.	PUMP POWER AND HEATER CIRCUIT
	ASSIGNED BY OWNER	PROVIDED BY OWNER	3/4" LFMC	WSGP–2B DISCONNECT	WSGP–2B PUMP MOTOR HEATER CONNECTION	4 FT.	40%	10%	E1003	DOMINION POWER ASSIGNED CABLE NO.	PUMP HEATER CIRCUIT
	ASSIGNED BY OWNER	PROVIDED BY OWNER	1 1/2" LFMC	WSGP–2B DISCONNECT	WSGP–2B PUMP MOTOR LEADS	4 FT.	40%	19%	E1003	DOMINION POWER ASSIGNED CABLE NO.	PUMP POWER CIRCUIT
	EXISTING	EXISTING	EXISTING DUCT BANK CDB99	DISTRIBUTION PANEL CAPB–PPL–1141	ELECTRICAL MANHOLE EMH–23	30 FT.	N/A	N/A	E1003	DOMINION POWER ASSIGNED CABLE NO.	PUMP 2A & 2B HEATER CIRCUITS
	ASSIGNED BY OWNER	PROVIDED BY OWNER	DUCT BANK, 1" PVC, SCH.40 PROP. CDB49	ELECTRICAL MANHOLE EMH–23	PUMP STATION ELECTRICAL RISER BOX	490 FT.	40%	11%	E1003	DOMINION POWER ASSIGNED CABLE NO.	PUMP 2A & 2B HEATER CIRCUITS
	EXISTING	EXISTING	EXISTING DUCT BANK CDB99	PANEL CAPB–PPL–1141	ELECTRICAL MANHOLE EMH–23	30 FT.	N/A	N/A	E1003	DOMINION POWER ASSIGNED CABLE NO.	PUMP STATION HEAT TRACE CIRCUIT
	ASSIGNED BY OWNER	PROVIDED BY OWNER	DUCT BANK, 1" PVC, SCH.40 PROP. CDB49	ELECTRICAL MANHOLE EMH–23	PUMP STATION ELECTRICAL RISER BOX	490 FT.	40%	18%	E1003	DOMINION POWER ASSIGNED CABLE NO.	PUMP STATION HEAT TRACE CIRCUIT
	ASSIGNED BY OWNER	PROVIDED BY OWNER	3/4" LFMC	PUMP STATION ELECTRICAL RISER BOX	HEAT TRACE THERMOSTAT NO. 2	10 FT.	40%	14%	E1003	DOMINION POWER ASSIGNED CABLE NO.	PUMP STATION HEAT TRACE CIRCUIT
	ASSIGNED BY OWNER	PROVIDED BY OWNER	3/4" LFMC	PUMP STATION ELECTRICAL RISER BOX	HEAT TRACE THERMOSTAT NO. 3	15 FT.	40%	14%	E1003	DOMINION POWER ASSIGNED CABLE NO.	PUMP STATION HEAT TRACE CIRCUIT
	EXISTING	EXISTING	EXISTING DUCT BANK CDB99	PANEL CAPB–PPL–1141	ELECTRICAL MANHOLE EMH–23	30 FT.	N/A	N/A	E1003	DOMINION POWER ASSIGNED CABLE NO.	FLOW SPLITTER INFLUENT PIPING HEAT TRACE CIRCUIT
	ASSIGNED BY OWNER	PROVIDED BY OWNER	DUCT BANK, 1" PVC, SCH.40 PROP. CDB49	ELECTRICAL MANHOLE EMH–23	FLOW SPLITTER ELECTRICAL RISER BOX	80 FT.	40%	9%	E1003	DOMINION POWER ASSIGNED CABLE NO.	FLOW SPLITTER INFLUENT PIPING HEAT TRACE CIRCUIT
	ASSIGNED BY OWNER	PROVIDED BY OWNER	3/4" LFMC	FLOW SPLITTER ELECTRICAL RISER BOX	HEAT TRACE THERMOSTAT NO. 1	6 FT.	40%	14%	E1003	DOMINION POWER ASSIGNED CABLE NO.	PUMP STATION HEAT TRACE CIRCUIT
	EXISTING	EXISTING	EXISTING DUCT BANK CDB99	I/O CAB 446	ELECTRICAL MANHOLE EMH–23	30 FT.	N/A	N/A	E1003	DOMINION POWER ASSIGNED CABLE NO.	LT–3 & LT–4 LEVEL TRANSMITTER SIGNAL CABLING
	ASSIGNED BY OWNER	PROVIDED BY OWNER	DUCT BANK, 1" PVC, SCH.40 PROP. CDB49	ELECTRICAL MANHOLE EMH–23	PUMP STATION ELECTRICAL RISER BOX	490 FT.	40%	11%	E1003	DOMINION POWER ASSIGNED CABLE NO.	LT–3 & LT–4 LEVEL TRANSMITTER SIGNAL CABLING
	ASSIGNED BY OWNER	PROVIDED BY OWNER	3/4" LFMC	PUMP STATION ELECTRICAL RISER BOX	LEVEL TRANSMITTER LT–3 J–BOX	490 FT.	40%	11%	E1003	DOMINION POWER ASSIGNED CABLE NO.	LT–3 LEVEL TRANSMITTER SIGNAL CABLING
	ASSIGNED BY OWNER	PROVIDED BY OWNER	3/4" LFMC	PUMP STATION ELECTRICAL RISER BOX	LEVEL TRANSMITTER LT–4 J–BOX	490 FT.	40%	11%	E1003	DOMINION POWER ASSIGNED CABLE NO.	LT–4 LEVEL TRANSMITTER SIGNAL CABLING
	ASSIGNED BY OWNER	PROVIDED BY OWNER	DUCT BANK, 2" PVC, SCH.40 PROP. CDB49	ELECTRICAL MANHOLE EMH–23	PUMP STATION ELECTRICAL RISER BOX	490 FT.	40%	0%	E1003	DOMINION POWER ASSIGNED CABLE NO.	2 SPARE CONDUITS
	ASSIGNED BY OWNER	PROVIDED BY OWNER	DUCT BANK, 1" PVC, SCH.40 PROP. CDB49	ELECTRICAL MANHOLE EMH–23	PUMP STATION ELECTRICAL RISER BOX	490 FT.	40%	0%	E1003	DOMINION POWER ASSIGNED CABLE NO.	4 SPARE CONDUITS

COMMONWEALTH OF VIRGINIA
CONNER BIB STURDIVANT
Lic. No. 402055449
PROFESSIONAL ENGINEER
11/16/16

CLEARY ZIMMERMANN ENGINEERS
1344 S. Flores, Suite 101
San Antonio, Texas 78204
T 210.447.6100 / F 210.447.6101
ClearyZimmermann.com

Dominion — TRC

POWER GENERATION ENGINEERING
RICHMOND, VIRGINIA

ELECTRICAL DETAILS AND RACEWAY SCHEDULE

RETROFIT – SLUDGE SEDIMENTATION BASINS
CLOVER, VIRGINIA

DSGN	CSTUR	DSGN SUPV	DATE APRIL 2016 DGNSPEC FOR FILE VERIFICATION
DRWN	CONNERS	ENGR SUPV	DRAWING NO. 66706–15348–CWSG–E1007 — REV. 1
CHKD	JCLEARY	PROJ ENGR	
DISPL ENGR	XXX	SCALE: AS NOTED	UNLESS OTHERWISE NOTED — SH 40 OF 41

REV	DATE	DSGN	DRWN	CHKD	DSGN SUPV	PROJ ENGR	CIVIL ENGR	ELEC ENGR	MECH ENGR	ARCH	E.M. ENGR	I&C ENGR
1	11.16.2016	DM	LLS	JNH	X	NA	RKN	CS	DS	X	X	X
0	04.08.2016	JDS	TRC	HCB	X	NA	RKN	CS	DS	X	X	X

CABLE SCHEDULE

REV.	CABLE NUMBER	NC (NUMBER OF CABLES)	CABLE TYPE	CABLE DESCRIPTION	LENGTH	FROM EQUIPMENT FLN	FROM EQUIPMENT DESCRIPTION	FROM EQUIPMENT REFERENCE DWG	TO EQUIPMENT FLN	TO EQUIPMENT DESCRIPTION	TO EQUIPMENT REFERENCE DWG	CABLE ROUTE
R0	ASSIGNED BY OWNER	4	PROVIDED BY OWNER	3#4,1#8G CU,XHHW	540 FT.	CAPC–MCC–114	MCC IN ELECTRICAL ROOM	E1003, E1004, E1005	WSGP–2A PUMP	PUMP FEEDER	E1003, E1004, E1005	CONDUIT, ELECTRICAL DUCT BANK
	ASSIGNED BY OWNER	4	PROVIDED BY OWNER	3#4,1#8G CU,XHHW	540 FT.	CAPC–MCC–114	MCC IN ELECTRICAL ROOM	E1003, E1004, E1005	WSGP–2B PUMP	PUMP FEEDER	E1003, E1004, E1005	CONDUIT, ELECTRICAL DUCT BANK
	ASSIGNED BY OWNER	3	PROVIDED BY OWNER	2#12,1#12G CU,XHHW	540 FT.	CAPB–PPL–1141	208/120V PANEL	E1003, E1005	WSGP–2A PUMP HEATER	PUMP HEATER CIRCUIT	E1003, E1005	CONDUIT, ELECTRICAL DUCT BANK
	ASSIGNED BY OWNER	3	PROVIDED BY OWNER	2#12,1#12G CU,XHHW	540 FT.	CAPB–PPL–1141	208/120V PANEL	E1003, E1005	WSGP–2B PUMP HEATER	PUMP HEATER CIRCUIT	E1003, E1005	CONDUIT, ELECTRICAL DUCT BANK
	ASSIGNED BY OWNER	3	PROVIDED BY OWNER	2#10,1#10G CU,XHHW	540 FT.	CAPB–PPL–1141	208/120V PANEL	E1003, E1005	PUMP STATION HEAT TRACE	HEAT TRACE CIRCUIT NO. 2	E1003, E1005	CONDUIT, ELECTRICAL DUCT BANK
	ASSIGNED BY OWNER	3	PROVIDED BY OWNER	2#10,1#10G CU,XHHW	540 FT.	CAPB–PPL–1141	208/120V PANEL	E1003, E1005	PUMP STATION HEAT TRACE	HEAT TRACE CIRCUIT NO. 3	E1003, E1005	CONDUIT, ELECTRICAL DUCT BANK
	ASSIGNED BY OWNER	1	PROVIDED BY OWNER	BELDEN 18GA., CU #8760	540 FT.	I/O CAB 446	REMOTE I/O CABINET	E1003, E1005	PUMP STATION LEVEL TRANSMITTER LT–3	LEVEL TRANSMITTER	E1003, E1005	CONDUIT, ELECTRICAL DUCT BANK
	ASSIGNED BY OWNER	1	PROVIDED BY OWNER	BELDEN 18GA., CU #8760	540 FT.	I/O CAB 446	REMOTE I/O CABINET	E1003, E1005	PUMP STATION LEVEL TRANSMITTER LT–4	LEVEL TRANSMITTER	E1003, E1005	CONDUIT, ELECTRICAL DUCT BANK
	ASSIGNED BY OWNER	3	PROVIDED BY OWNER	2#10,1#10G CU,XHHW	110 FT.	CAPB–PPL–1141	208/120V PANEL	E1003, E1005	FLOW SPLITTER INFLUENT PIPING HEAT TRACE	HEAT TRACE CIRCUIT NO. 1	E1003, E1005	CONDUIT, ELECTRICAL DUCT BANK

PANEL: CAPB-PPL-1141

FEEDER: EXISTING

SIEMENS — VOLTAGE: 208/120V — PHASES: 3 — WIRES: 4 — AMPERES: 250 — MTG: SURFACE — ENCL: NEMA 1 — MAIN BKR: 40A,3P

LOAD SERVED	PHASE LOAD IN VA A	PHASE LOAD IN VA B	PHASE LOAD IN VA C	BKR SIZE / POLES	CIRCUIT	CIRCUIT	BKR SIZE / POLES	PHASE LOAD IN VA A	PHASE LOAD IN VA B	PHASE LOAD IN VA C	LOAD SERVED
					A B C						
LTG–SLUDGE STOR/HLDNG POND ELEC BLDG.	EXISTING			20A,1P	1	2	20A,1P	EXISTING			SVCE–CSTG–PL–14
RCPT–SLUDGE STOR/HLDNG POND ELEC BLDG.		EXISTING		20A,1P	3	4	20A,1P		–		SPARE
SVCE–CWWC–SAM–1			EXISTING	20A,1P	5	6	20A,1P			EXISTING	SVCE–CWWC–IRK–1
SPARE	EXISTING			20A,1P	7	8	20A,1P	EXISTING			SVCE–CWSG–PL–4
FLOW SPLITTER HEAT TRACE NO. 1		350		30A,2P GFCI (1)	9	10	30A,2P GFCI (2)		350		PUMP STATION HEAT TRACE NO. 2
FLOW SPLITTER HEAT TRACE NO. 1			350		11	12				350	PUMP STATION HEAT TRACE NO. 2
SVCE–CCOA–CAB–446	EXISTING			20A,1P	13	14	20A,1P	EXISTING			SVCE–CBUU–TCPL–1
SVCE–RMT–I/O CAB 446 UTILITY PWR.		EXISTING		20A,1P	15	16	20A,1P		EXISTING		SVCE–CWSG–IRK–1
MCC–114 MOTOR HEATER CWSG–P–1A			EXISTING	15A,1P	17	18	20A,1P			EXISTING	SVCE–CWWC–P–2
MCC–114 MOTOR HEATER CWSG–P–1B	EXISTING			15A,1P	19	20	40A,3P	EXISTING			SVCE–CEEA–PL–12 FREEZE PROT PNL
MCC–114 MOTOR HEATER CWSG–P–1C		EXISTING		15A,1P	21	22			EXISTING		SVCE–CEEA–PL–12 FREEZE PROT PNL
MCC–114 MOTOR HEATER CWSG–P–2A			EXISTING	15A,1P	23	24				EXISTING	SVCE–CEEA–PL–12 FREEZE PROT PNL
MCC–114 MOTOR HEATER CWSG–P–2B	EXISTING			15A,1P	25	26	–	–			SPACE
SPACE		–		–	27	28	30A,2P GFCI (3)		350		PUMP STATION HEAT TRACE NO. 3
SPACE			–	–	29	30				350	PUMP STATION HEAT TRACE NO. 3

ITEMS IN GREYSCALE ARE EXISTING

EXISTING POWER DISTRIBUTION PANEL CAPB-PPL-1141

NTS

NOTES

1. REMOVE EXISTING 20A, 1P BREAKERS IN SPACES 9 & 11 AND REPLACE WITH 30A, 2P GFCI BREAKER TO SERVE FLOW SPLITTER BOX HEAT TRACE NO. 1.
2. REMOVE EXISTING 20A, 1P BREAKERS IN SPACES 10 & 12 AND REPLACE WITH 30A, 2P GFCI BREAKER TO SERVE PUMP STATION HEAT TRACE NO. 2.
3. PROVIDE 30A, 2P GFCI BREAKER TO SERVE PUMP STATION HEAT TRACE NO. 3 IN SPACES 28 & 30.

COMMONWEALTH OF VIRGINIA
CONNER BIB STURDIVANT
Lic. No. 402055449
PROFESSIONAL ENGINEER
11/16/16

CLEARY ZIMMERMANN ENGINEERS
1344 S. Flores, Suite 101
San Antonio, Texas 78204
T 210.447.6100 / F 210.447.6101
ClearyZimmermann.com

Dominion — TRC

POWER GENERATION ENGINEERING
RICHMOND, VIRGINIA

CABLE AND PANEL SCHEDULE

RETROFIT – SLUDGE SEDIMENTATION BASINS
CLOVER, VIRGINIA

DSGN	CSTUR	DSGN SUPV	DATE APRIL 2016 DGNSPEC FOR FILE VERIFICATION
DRWN	CONNERS	ENGR SUPV	DRAWING NO. 66706–15348–CWSG–E1008 — REV. 1
CHKD	JCLEARY	PROJ ENGR	
DISPL ENGR	XXX	SCALE: AS NOTED	UNLESS OTHERWISE NOTED — SH 41 OF 41

REV	DATE	DSGN	DRWN	CHKD	DSGN SUPV	PROJ ENGR	CIVIL ENGR	ELEC ENGR	MECH ENGR	ARCH	E.M. ENGR	I&C ENGR
1	11 16 2016	DM	LLS	JNH		NA	RKN	CS	DS			
0	04 08 2016	JDS	TRC	HCB		NA	RKN	CS	DS			

1 REVISED LINER SYSTEM

0 ISSUED FOR BID

Appendix B
Retrofit Schedule

Clover Retrofit Schedule

ID	Task Name	Duration	Start	Finish
1	**North Basin**	**74 days**	**Mon 4/17/17**	**Thu 7/27/17**
2	**North Basin Maintenance Cleaning**	**14 days**	**Mon 4/17/17**	**Thu 5/4/17**
3	Excavate CCR from Basin	10 days	Mon 4/17/17	Fri 4/28/17
4	Material Solidification/Load Out/T & D	12 days	Wed 4/19/17	Thu 5/4/17
5	**North Basin Retrofit**	**63 days**	**Mon 5/1/17**	**Wed 7/26/17**
6	Remove Existing Cover & Liner	25 days	Mon 5/1/17	Fri 6/2/17
7	Demolish Misc Structures	3 days	Mon 5/1/17	Wed 5/3/17
8	Remove Rip Rap, Concrete and Liner System	21 days	Fri 5/5/17	Fri 6/2/17
9	Install New Basin Lining	38 days	Mon 6/5/17	Wed 7/26/17
16	**Demobilization**	**1 day**	**Thu 7/27/17**	**Thu 7/27/17**
17	**South Basin**	**106 days**	**Mon 4/16/18**	**Mon 9/10/18**
18	**South Basin Maintenance Cleaning**	**25 days**	**Mon 4/16/18**	**Fri 5/18/18**
19	Excavate CCR from Basin	23 days	Mon 4/16/18	Wed 5/16/18
20	Material Solidification/Load Out/T & D	20 days	Mon 4/23/18	Fri 5/18/18
21	**South Basin Retrofit**	**68 days**	**Mon 5/21/18**	**Wed 8/22/18**
22	Remove Existing Cover & Liner	21 days	Mon 5/21/18	Mon 6/18/18
23	Demolish Misc Structures	3 days	Mon 5/21/18	Wed 5/23/18
24	Remove Rip Rap, Concrete and Liner System	21 days	Mon 5/21/18	Mon 6/18/18
25	Install New Basin Lining	47 days	Tue 6/19/18	Wed 8/22/18
33	**Infrastructure Modifications**	**95 days**	**Mon 4/16/18**	**Fri 8/24/18**
43	**Demobilization**	**12 days**	**Fri 8/24/18**	**Mon 9/10/18**

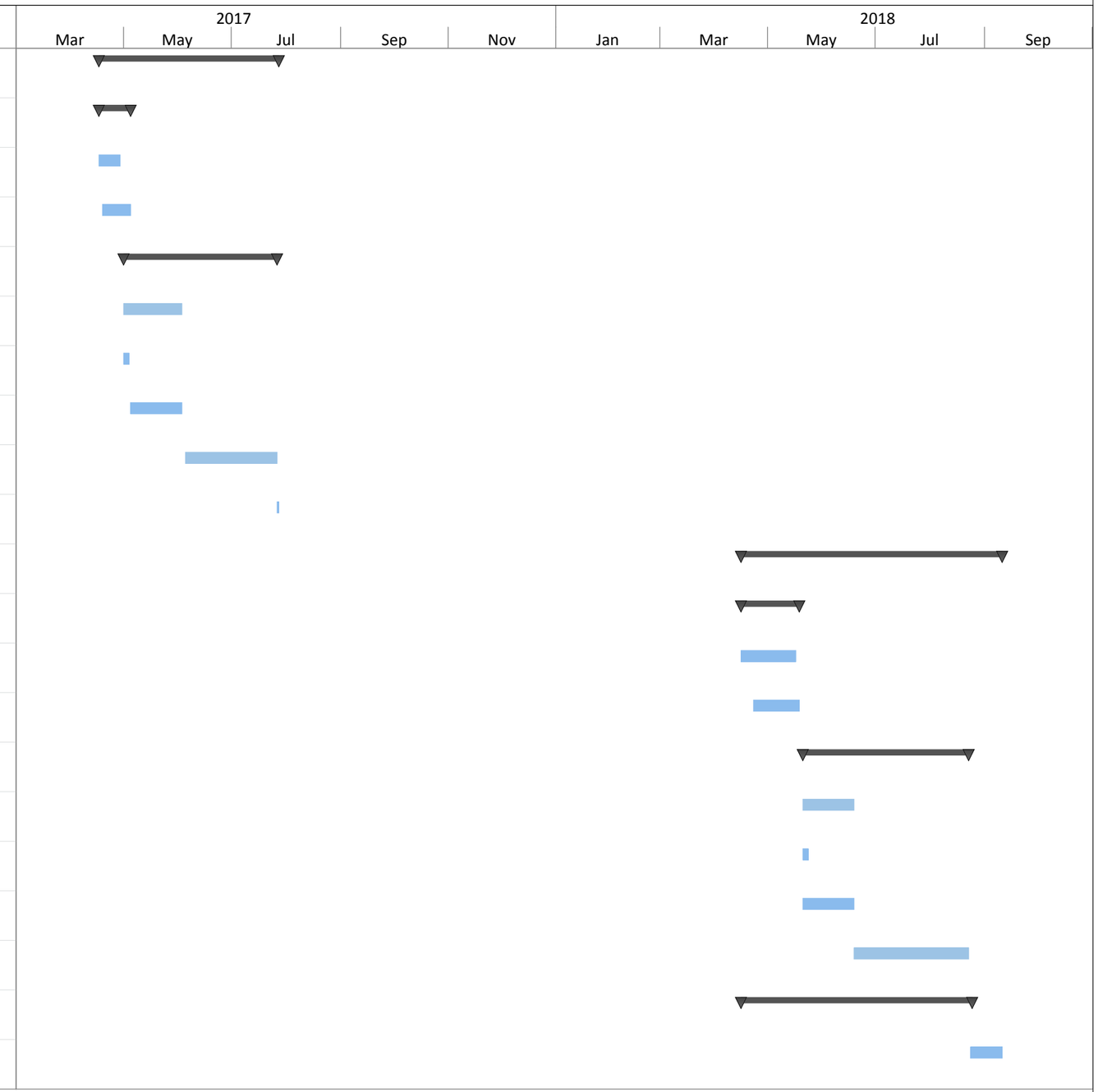

Dominion - Clover Retrofit Schedule Date: 8/31/16

Task Milestone Summary

Appendix C
Retrofit Cost Estimate

Clover Power Station
Retrofit - Existing Sludge Sedimentation Basins
Cost Estimate

NORTH BASIN	
Pre-Mobilization Planning	$25,000
Mobilization, Bonds, Insurance	$300,000
Site Preparation	$125,000
CCR Removal (5,000 cy)	$175,000
CCR Stabilization/T&D (5,000 cy)	$135,000
Demolish Existing Cover and Liner	$485,310
Existing Cover and Liner T&D	$140,000
Subbase Preparation	$44,000
New Liner Installation	$363,000
Concrete Cover	$1,300,000
Concrete Retaining Walls	$212,500
Concrete Ramp	$100,000
Basin Piping	$182,300
Rip Rap	$100,000
Goetextile Separator	$35,000
Temporary Dam	$500,000
Geotechnical Testing	$50,000
Demobilization	$100,000
North Basin Total:	**$4,372,100**
SOUTH BASIN	
Pre-Mobilization Planning	$25,000
Mobilization, Bonds, Insurance	$250,000
Site Preparation	$125,000
CCR Removal (19,000 cy)	$665,000
CCR Stabilization/T&D (19,000 cy)	$513,000
Demolish Existing Cover and Liner	$485,310
Existing Cover and Liner T&D	$140,000
Subbase Preparation	$44,000
New Liner Installation	$363,000
Concrete Cover	$1,300,000
Concrete Retaining Walls	$212,500
Concrete Ramp	$100,000
Basin Piping	$182,300
Riprap	$100,000
Goetextile Separator	$35,000
Geotechnical Testing	$50,000
Demobilization	$200,000
South Basin Total:	**$4,790,100**
YARD PIPING	
8” Carbon Steel Pipe	$64,500
8” Welded Fittings	$12,700
Yard Piping Total:	**$77,200**

PUMP STATION	
Demolition	$12,000
Demolition T&D	$8,000
Slurry Transfer Pump (2)	$264,500
6” Flanged Pipe, Fittings and Valves	$28,800
Aluminum Handrail	$2,400
18” Slide Gate (2)	$27,600
Pipe Insulation & Heat Tracing	$2,300
6” Bypass Pump & Piping	$31,700
Painting	$5,800
Electrical System	$195,500
Structural Concrete	$121,900
Pump Station Total:	**$700,500**
FLOW SPLIT BOX	
Demolition	$1,000
Demolition T&D	$2,000
10” Basin Feed Pipe, Fittings and Valves	$17,300
Pipe Insulation & Heat Tracing	$1,200
Temporary Bypass Piping	$11,500
Structural Concrete	$19,600
Splitter Box Total:	**$52,600**
PROJECT MANAGEMENT	
Project Manager	$780,000
Project Administration	$312,000
Construction Manager	$624,000
Construction Quality Assurance	$624,000
Health and Safety	$624,000
Project Management Total:	**$2,964,000**
PROJECT TOTAL:	**$12,956,500**

Assumptions

The Retrofit Cost Estimate is based on the following assumptions:

1. The transfer pumps will be Vertical Cantilever Slurry Pumps, as manufactured by Lawrence Pumps, Inc.
2. Each pump will be sized for 410 gpm design flow rate. The pumps are to operate as duty/standby.
3. Above-ground piping will be ductile iron with flanged fittings, heat tracing, insulation, and aluminum jacketing.
4. Buried yard piping will be welded carbon steel meeting the requirement of ASTM A53, Type S. Pipe will be provided with PTFE internal lining for corrosion/wear resistance and polyethylene exterior wrap for corrosion protections.
5. A single temporary submersible bypass pump will be rented for a period of 24 weeks.
6. Estimated quantities for CCR removal are 24,000 cy total.
7. Cost are based on the 30% Design Drawings