MEMORANDUM

Department of Environmental Quality
Division of Water Program Coordination
Office of Ground Water Management

Mail Address:
P.O. Box 10009
Richmond, VA 23240-0009

location:
629 East Main Street
Richmond, VA 23240

SUBJECT: Guidance Memorandum No. 99-2005
Ground Water Withdrawal Permit Procedures Manual

TO: Gerry Seeley, Frank Daniel, Al Willett, Larry McBride
James Golden, Karen Sizemore, Rick Weeks, and Harold Winer

FROM: Larry G. Lawson, P.E.

DATE: June 16, 1999

COPIES: **(Cover Memo Only)** NRO, VRO, WCRO, & SWRO Regional Directors, Regional Office Remediation Managers, Regional Permit Managers, Regional Office Compliance Managers, Terry Wagner and Scott Bruce

Attached is the Ground Water Withdrawal Permit Procedures Manual. This manual has an effective date of June 1, 1999. Your staff should discontinue use of the previous manual (OSRR Guidance Memo 94-002 dated March 1, 1994, and amended April 6, 1994 Ground Water Withdrawal Permit Procedures Manual).

This manual provides procedural guidance to the staff. This document is guidance only. It does not establish a binding norm and is not finally determinative of the issues addressed. Agency decisions in any particular case will be made by applying the Ground Water Management Act of 1992 and implementing regulations on the basis of the site-specific facts.

I would like to thank the following DEQ staff for their assistance in developing this manual:

Virginia Newton	Al Willett	Michael Robinson
Dr. B.N. Sinha	Larry McBride	Terry Wagner
Dave Borton	Robin Patton	Scott Bruce

If you or your staff have any questions about the manual, please contact Scott Bruce or Terry Wagner.

/sb

Attachment

COMMONWEALTH of VIRGINIA
DEPARTMENT OF ENVIRONMENTAL QUALITY

GROUND WATER WITHDRAWAL PERMIT PROCEDURES MANUAL

(For processing ground water withdrawal permit applications for new or expanded ground water withdrawals within designated Ground Water Management Areas.)

ADMINISTERED
BY THE
GROUND WATER PROGRAM
OFFICE OF GROUND WATER MANAGEMENT

June 1, 1999

Key

DEQ	Department of Environmental Quality
DWPC	Division of Water Program Coordination
GWMA	Ground Water Management Area
OD	Office of the Director
OGWM	Office of Ground Water Management
OPL	Office of Policy & Legislation
OU	Originating Unit
RD	Regional Director
RO	Regional Office
SWCB	State Water Control Board

TABLE OF CONTENTS

	Section	Page
I.	Authorization and Regulations	1
II.	Purpose of the Ground Water Withdrawal Permit Manual	1
III.	Responsibilities	1
	A. Office of Ground Water Management	1
	B. Regional Office	1
IV.	Definitions	2
V.	Administrative Procedures	5
	A. Application to Withdraw Ground Water	5
	B. Priority of Evaluation	6
	C. Administrative Application Review	6
	D. Technical Application Review and Evaluation	8
	E. Draft Permit Development	15
	F. Draft Permit Public Notice	16
	G. Draft Permit Public Hearing	18
	H. Permit Issuance	19
	I. Permit Application Denial	20
	J. Voluntary Permit Revocation	20
	K. Transfer of Ownership	21
	L. Application Fee Refund	21
	M. Minor Amendment	21

I. AUTHORIZATION AND REGULATIONS

The Ground Water Management Act of 1992 assigns the management of ground water resources in Ground Water Management Areas (GWMAs) to the State Water Control Board (SWCB).

The DEQ Ground Water Program is carried out in accordance with those sections of the State Water Control Law which apply to the protection of State waters.

II. PURPOSE OF THE GROUND WATER PERMIT MANUAL

The purpose of this manual is to guide the permit writers on all aspects of groundwater permit procedures. These procedures will ensure consistency between the Regional Offices (RO), and allow new personnel a document from which to learn how to write permits.

This manual has been developed in a loose-leaf format to allow easy modification of the procedure pages. This will help the Office of Ground Water Management (OGWM) and the RO's keep abreast of the most recent regulations and procedures by removing or adding pages to the manual.

Procedures contained herein shall remain in effect until such time as they are formally modified and approved by the Director of the Division of Water Program Coordination.

Headquarters and regional staff shall also keep abreast and observe changes in procedures brought about by the issuance of other DWPC regulatory guidance memoranda.

III. RESPONSIBILITIES

A. OGWM, through its Ground Water Program, is responsible for the administration of the Ground Water Withdrawal Permitting Program.

B. RO's, having jurisdiction within GWMAs, are responsible for following these standardized administrative procedures and in carrying out the assigned program.

IV. DEFINITIONS

Unless a different meaning is required by the context, the following terms, as used in this manual, shall have the following meanings.

"Act" means the Ground Water Management Act of 1992, Chapter 25 § 62.1-254. et seq. of the Code of Virginia as adopted 1992.

"Adverse Impact" means reductions in ground water levels or changes in ground water quality that limit the ability of any existing ground water user lawfully withdrawing or authorized to withdraw ground water at the time of permit or special exception issuance to continue to withdraw the quantity and quality of ground water required by the existing use.

"Amendment" has the same meaning as "Major Modification" as defined in 9 VAC 25-20 of the Permit Fee Regulation which carries a $ 1000 fee.

"Applicant" means a person filing an application to initiate or expand a ground water withdrawal in a ground water management area.

"Area of impact" means the areal extent of each aquifer where more than one foot of drawdown is predicted to occur due to a proposed or expanded withdrawal.

"Beneficial use" includes, but is not limited to domestic (including public water supply), agricultural, commercial, and industrial uses.

"Board" means the State Water Control Board.

"Consumptive use" means the withdrawal of ground water, without recycle of said waters to their source of origin.

"Department" means the Department of Environmental Quality.

"Draft permit" means a prepared document indicating the board's tentative decision relative to a permit action.

"Director" means the director of the Department of Environmental Quality.

"Existing user" means those persons that have been granted a ground water withdrawal permit subject to this regulation and all other persons who are excluded from permit requirements by 9 VAC 25-610-50.

"Geophysical investigation" means any hydrogeologic evaluation to define the hydrogeologic framework of an area or determine the hydrogeologic properties of any aquifer or confining unit to the extent that withdrawals associated with such investigations do not result in unmitigated adverse impacts to existing ground water users. Geophysical investigations include, but are not limited to, pump tests and aquifer tests.

"Ground Water" means any water, except capillary moisture, beneath the land surface in the zone of saturation or beneath the bed of any stream, lake, reservoir or other body of surface water wholly or partially within the boundaries of this Commonwealth, whatever the subsurface geologic structure in which such water stands, flows, percolates or otherwise occurs.

"Ground water management area" means a geographically defined ground water area in which the Board has deemed the levels, supply or quality of ground water to be adverse to the public welfare, health and safety.

"Historic prepumping water levels" means ground water levels in aquifers prior to the initiation of any ground water withdrawals. For the purpose of this regulation, in the Eastern Virginia and Eastern Shore Ground Water Management Areas, historic prepumping water levels are defined as water levels present in aquifers prior to 1890.

"Human consumptive use" means the withdrawal of ground water for private residential domestic use and that portion of ground water withdrawals in a public water supply system that support residential domestic uses and domestic uses at commercial and industrial establishments.

"Minor amendment" as defined in 9 VAC-610-330 of the Ground Water Withdrawal Regulations has the same meaning as "Minor Modification" as defined in 9 VAC 25-20 of the Permit Fee Regulation.

"Mitigate" means to take actions necessary to assure that all existing ground water users at the time of issuance of a permit or special exception who experience adverse impacts continue to have access to the amount and quality of ground water needed for existing uses.

"Permit" means a Ground Water Withdrawal Permit issued by the board permitting the withdrawal of a specified quantity of ground water under specified conditions in a ground water management area.

"Permittee" means a person who currently has an effective Ground Water Withdrawal Permit issued by the board.

"Person" means any and all persons, including individuals, firms, partnerships, associations, public or private institutions, municipalities or political subdivisions, governmental agencies, or private or public corporations organized under the laws of this Commonwealth or any other state or country.

"Public hearing" means a fact finding proceeding held to afford interested persons an opportunity to submit factual data, views and comments to the board pursuant to the board's Procedural Rule No. 1.

"Salt Water Intrusion" means the encroachment of saline waters in any aquifer that creates adverse impacts to existing ground water users or is counter to the public interest.

"Special Exception" means a document issued by the board for withdrawal of ground water in unusual situations where requiring the user to obtain a ground water withdrawal permit would be contrary to the purpose of the Ground Water Management Act of 1992. Special exceptions allow the withdrawal of a specified quantity of ground water under specified conditions in a ground water management area.

"Surface and Ground Water Conjunctive Use System" means an integrated water supply system wherein surface water is the primary source and ground water is a supplemental source that is used to augment the surface water source when the surface water source is not able to produce the amount of water necessary to support the annual water demands of the system.

"Well" means any artificial opening or artificially altered natural opening, however made, by which ground water is sought or through which ground water flows under natural pressure or is intended to be artificially drawn.

"Withdrawal system" means; (1) One or more wells or withdrawal points located on the same or contiguous properties under common ownership for which the withdrawal is applied to the same beneficial use, or (2) Two or more connected wells or withdrawal points which are under common ownership but not necessarily located on contiguous properties.

V. ADMINISTRATIVE PROCEDURES - DOCUMENTATION

The following procedures are used in the administration of ground water permitting activities. All related forms are included in the Appendix.

A. Application to Withdraw Ground Water - A Ground Water Withdrawal Permit application (see attachment B) is required from the applicant for the proposed withdrawal of 300,000 gallons or more of ground water in any one month in a GWMA.(see attachment V for a GWMA MAP).

1. Applicant contacts RO by phone or letter to request a ground water withdrawal permit application package (see attachments A,B,B1,C,O,T). An application package consists of an application cover page, application instructions, application, sample mitigation plan, LGOF form, permit application fee form, copy of the Ground Water Withdrawal Regulations, and GW-2 form. At the time of application inquiry, the RO shall inform the applicant of the requirement to schedule a preapplication conference prior to application submittal to the RO. **The RO shall instruct the applicant of the need to compile all existing well construction, aquifer/pump test, and geophysical data prior to the meeting.** If possible, the preapplication conference should be held at the facility. The RO shall coordinate the scheduling of the preapplication conference with CO modeling staff to discuss application requirements as well as information needed to conduct a technical evaluation of the area of impact and 80 % drawdown criterion. In the case of new withdrawals for public water supplies, the RO shall review item 5 of the application instructions, JUSTIFICATION FOR THE AMOUNT OF WITHDRAWAL REQUESTED:, with the applicant to explain the statutory relationship between the State Health Department's waterworks operation permit and ground water withdrawal permit. RO/CO staff should discuss at the preapplication conference, if possible, the need for a mitigation plan, monitoring wells, hydrogeologic data collection (cores, cuttings, aquifer tests), and the need for an evaluation of salt water intrusion. In most cases, multiple preapplication meetings may be needed prior to application submittal. Results of the meeting shall be documented on a Preapplication Conference Meeting Form. (see attachment B2) One application shall be submitted for each withdrawal system.

2. As stated in the Permit Application Fee Instructions, the applicant will be instructed to submit the appropriate permit fee and the white and yellow pages of the fee form to DEQ-Receipts Control, P.O. Box 10150, Richmond, VA 23240. A copy of the check or money order and the pink copy of the fee form shall be attached to the application when submitted to the RO. Accounting will send the yellow copy to the RO to confirm payment of the

fee. The RO shall record the deposit date and the fee amount on the front page of the application.

3. The applicant will be instructed to submit the original application and one copy to the RO. Upon receipt of an application, the RO shall date stamp the application and copy, and assign an identification number. (NOTE: This number is unique for each application, the same number will be assigned to the permit if issued). Each RO will be assigned a block of permit numbers as follows: Piedmont Regional Office - GW0000100 to GW0029900; Tidewater Regional Office - GW0030000 to GW0099900. Permit numbers will consist of a alpha numeric number with a "GW" prefix followed by a seven digit number. For applications not resulting in a permit, such numbers will not be reassigned. NOTE: Numbers will be assigned to applications for new or expanded withdrawals in the sequence they are received. Numbers will be assigned to applications based on historic use when a draft permit is developed.

4. The resubmittal of an application to correct administrative or technical deficiencies, and any other correspondence received concerning the application shall be date stamped by the RO.

B. Priority of Evaluation Applications shall be evaluated in order based on the date that an application form is received by the RO. Applications will be assumed to be complete when received by the RO and applicants shall retain their priority of evaluation so long as they correct any administrative deficiencies or technical data requests in the allocated time. Should an applicant not correct deficiencies in the allocated time, they will lose their priority of evaluation and the RO will establish a new priority when necessary information is received.

In cases where a RO receives multiple applications on the same day, every effort should be made to process those applications in a fashion so that draft permits for that group of applications can also be issued on the same date. Should any such applicants not correct deficiencies as described above they shall not be included in the group and the RO shall establish a new priority of evaluation as described above.

In cases where a RO has multiple outstanding applications, regardless of date of receipt, and there is reason to believe that the issuance of one permit may limit the ability to issue another permit, applications for human consumptive uses shall be given a priority of evaluation above all other uses.

C. Administrative Application Review The RO shall review the application and attachments within 30 days of receipt to determine if the application submittal is administratively complete. The application submittal will be considered administratively complete on the date submitted to the RO provided:

1. All sections of the application have been addressed, including the preapplication conference meeting date.

2. The application is signed and dated.

3. A complete copy of the application and all attachments is included.

4. The permit fee has been paid and the fee form and check copy submitted.

5. A signed LGOF form is attached. (In instances where a local government has not signed a LGOF, the applicant may satisfy this requirement by providing a signed certified mail receipt indicating that the local government received the LGOF form more than 45 days prior to the date of the application and a statement that the local government has not responded to the applicant's request.)

6. A complete State Health Department waterworks operation permit including Engineering Description Sheets, or equivalent, must be attached if the type of use is an existing public water supply as defined by the State Health Department. A waterworks operation permit will not be required to consider an application for a proposed public water supply administratively complete. A waterworks operation permit will be required prior to the issuance of a final permit for a proposed public water supply.

If the application submittal is administratively incomplete, the RO shall return the original application form, application attachments or the entire submittal to the applicant with appropriate notations (see attachment E1) and retain the copy. Applicants will be given 10-30 days, at the discretion of the RO, to correct all deficiencies. If requested by the applicant, the RO may extend the response time no more than 30 days.

The RO shall evaluate the applicant's response to the administrative deficiency letter within 30 days of receipt to determine if the applicant has addressed all deficiencies.

If the RO receives a response within the specified time period correcting all deficiencies, processing proceeds.

If the applicant fails to respond within the specified time period, the RO shall notify the applicant in writing that the application is no longer being considered and has lost its priority for evaluation.

If the RO receives a response but all deficiencies are not satisfactorily corrected within the specified time period, the RO may either return the original application

for correction and re-submittal of deficient items or simply notify the applicant in writing of deficient items. In either case, the RO must notify the applicant in writing that the application is no longer being considered and has lost its priority for evaluation. The applicant may establish a new priority of evaluation if they correct all deficiencies within 60 days of the deadline established to correct administrative deficiencies.

D. Technical Application Review and Evaluation An applicant must demonstrate, through information submitted in a ground water withdrawal permit application, to the Board's satisfaction that the maximum safe supply of ground water will be preserved and protected for all other beneficial uses, and that the applicant's proposed withdrawal will have no significant unmitigated impact on existing ground water users or the ground water resource. Upon determination that the application is administratively complete, the RO shall forward a copy of the application to the Ground Water Program Manager. RO/CO staff shall conduct a technical review of the application within 60 days to determine if adequate information has been submitted to: (1) allow CO staff to evaluate the area of impact and 80% drawdown criterion; and (2) allow RO preparation of a draft permit. An application shall be considered technically complete when the applicant has submitted the required information based on the preapplication conference, withdrawal permit application, and Ground Water Withdrawal Regulations (see attachment T) and has demonstrated compliance with the following criteria:

1. AMOUNT RO reviews item 5 on the application to determine if the applicant demonstrates that the amount of ground water withdrawal requested is the smallest amount of withdrawal necessary to support the proposed beneficial use and that the amount is representative of the amount necessary to support similar beneficial uses when adequate conservation measures are employed. RO staff shall also determine if the proposed withdrawal amount is reasonable when compared to similar uses by other applicants or existing permit holders and ensure the application documents the actual or proposed pumping rates including seasonal or intermittent pumping schedules for each well included in the application. Upon determination of an acceptable withdrawal amount, either proposed in the application or negotiated with the applicant, the RO shall inform CO modeling staff of the approved withdrawal amount for determination of area of impact and 80% drawdown criterion.

2. WASTE WATER DISPOSAL RO reviews item 6 on the application to ensure that the applicant has the ability to dispose of any waste water that is produced by the proposed facility. In cases where the applicant has an existing discharge permit, or is concurrently applying for a discharge permit, the RO shall ensure that the applicant has the ability to discharge the amount of ground water that is requested. A final ground

water withdrawal permit shall be coordinated with the issuance of an appropriate waste water discharge permit.

3. PUMP & WATER INTAKE POSITION RO reviews item 9 on the application to ensure that no existing pumps or water intake devices are placed below the top of the uppermost confined aquifer that a well utilizes as a ground water source or below the bottom of an unconfined aquifer that a well utilizes as a ground water source. CO staff may assist with determining appropriate aquifer tops at the request of RO staff. RO staff also ensures that proposed pump settings meet this criterion. In the case of a request for an expanded withdrawal whose existing pump settings do not meet this criterion, pumps must either be raised to a level that will comply with the criterion or the applicant must agree to a plan to bring pump settings into compliance during the term of the permit. This plan shall be included as an enforceable permit condition.

4. LGOF RO reviews item 10 on the application to ensure that the applicant provides certification by the local governing body that the location and operation of the withdrawing facility is in compliance with all ordinances adopted pursuant to Chapter 22 of Title 15.2 of the Code of Virginia. In instances where a local government has not signed a LGOF, the applicant may satisfy this requirement by providing a signed certified mail receipt indicating that the local government received the LGOF form more than 45 days prior to the date of the application and a statement that the local government has not responded to the applicant's request. In such cases, the permit writer shall contact the locality in question to ensure that the locality did not actually deny the LGOF request.

5. WATER QUALITY RO reviews item 11 on the application to determine if the applicant demonstrates that the ground water withdrawal will originate from the aquifer or aquifers that contain the lowest quality water that will support the proposed beneficial use. The evaluation must include a list of critical water quality parameters with minimal limits which are associated with the type of proposed use as well as documentation of expected water quality in the aquifers present at the proposed withdrawal site. The applicant must demonstrate that the ground water withdrawal will originate from the aquifer or aquifers that contain the lowest quality water that will support the proposed beneficial use. **NOTE:** Applications for public water supplies shall not be required to include critical water quality parameters or demonstrate that the ground water withdrawal will originate from the aquifer or aquifers that contain the lowest quality water.

   Mixing or blending of differing water quality should be allowed provided that individual wells are not screened in both high quality aquifers (250 mg/l chloride or less) and low quality waters (251 mg/l chloride or

greater). A permit will not be issued for a withdrawal from a new well which screens high and low quality ground water. Drill stem or packer tests may be required during test drilling to document the 250 mg/l chloride location. This criterion will be applied to all applications for new withdrawals.

In the case of applications for expanded withdrawals where the applicants existing wells are screened in both high and low quality waters, the criterion may be applied to existing wells when the RO determines there is evidence of or potential for cross-contamination between aquifers. In cases where the RO applies this criterion to existing wells, the RO may require the abandonment of such wells or alteration of the construction of such wells so that they no longer connect high and low quality aquifers prior to issuance of the permit, or the applicant must agree to a plan to bring the existing wells into compliance with this criterion during the term of the permit. Any such plan shall be included as an enforceable permit condition. Such evidence of the potential for cross contamination includes, but is not limited to, higher hydraulic head in the low quality aquifer than in the high quality aquifer.

6. ALTERNATE SOURCES RO reviews item 12 on the application to determine if the applicant demonstrates that no other sources of water supply, including reclaimed water, are viable. Information as to the proximity to public water supplies, surface water sources and sources of reclaimed water should be included. In most cases, connection to a public water supply (surface water) will be considered a viable water supply in lieu of ground water. If other sources of water supply are viable, a ground water withdrawal permit shall not be issued.

7. WATER CONSERVATION & MANAGEMENT PLAN RO reviews item 13 on the application to determine if the water conservation and management plan provided by applicant satisfies the requirements as described in 9 VAC 25-610-100 of the Ground Water Withdrawal Regulations. Approvable water conservation and management plans shall, at a minimum, contain the following elements and implementation of the water conservation and management plan shall be included as enforceable permit conditions:

(a) Requirements for the use of water saving plumbing and processes including, where appropriate, the use of water saving fixtures in new and renovated plumbing as provided in the Uniform Statewide Building Code.

(b) A water loss reduction program.

(c) A water use education program.

(d) An evaluation of water reuse options.

(e) Requirements for mandatory water use reductions during water shortage emergencies declared by the local governing body or director of DEQ, including, where appropriate, ordinances prohibiting the waste of water generally and requirements providing for mandatory water use restrictions, with penalties, during water shortage emergencies.

RO shall approve plans that contain:

(a) Requirements that water saving fixtures be used in all new and renovated plumbing as provided in the Uniform Statewide Building Code.

(b) Requirements for making technological, procedural, and/or programmatic improvements to the applicant's facilities and processes to decrease water consumption. These requirements shall assure that the most efficient use is made of ground water.

(c) Requirements for an audit by the permittee of the total amount of ground water used in the applicant's distribution system and operational processes during the first two years of the permit cycle. Subsequent implementation of a leak detection and repair program will be required within one year of the completion of the audit, when such a program is technologically feasible.

(d) Requirements for the education of water users and employees controlling water consuming processes to assure that water conservation principles are well known by the users of the resource.

(e) An evaluation of potential water reuse options and assurances that water will be reused in all instances where reuse is feasible.

(f) Requirements for mandatory water use restrictions during water shortage emergencies that prohibit all non-essential uses such as lawn watering, car washing, and similar non-essential residential, industrial and commercial uses for the duration of the water shortage emergency.

(g) Penalties for failure to comply with mandatory water use restrictions.

8. AREA OF IMPACT Upon determination that an application is technically complete, the CO shall forward a copy of the Technical Evaluation Report to the RO within 60 days. RO receives and concurs with the Technical Evaluation Report (see attachment C1) completed by CO modeling staff to determine if the area of impact of the proposed withdrawal will remain on property owned or served (if all served in the service area) by the

applicant, or that there are no existing ground water withdrawers within the area of impact of the proposed withdrawal.

In cases where the area of impact does not remain on the property owned or served by the applicant or existing ground water withdrawers are located within the area of impact, the applicant shall provide and implement a plan to mitigate all adverse impacts on existing ground water users. A model mitigation plan is included in attachment B 1. Approvable mitigation plans shall, at a minimum, contain the following features, and implementation of the mitigation plan shall be included as enforceable permit conditions:

(1). The rebuttable presumption that water level declines that cause adverse impacts to existing wells within the area of impact are due to the proposed withdrawal.

(2). A commitment by the applicant to mitigate undisputed adverse impacts due to the proposed withdrawal in a timely fashion. The applicant should commit to reviewing all claims within five business days of receipt and responding to the claimant that the claim is complete or that additional information is required to complete the claim. The applicant should commit to informing the claimant within ten days of a complete claim that they will either mitigate the claim or deny it. The applicant should commit to providing an interim source of water to an undisputed claimant who has lost their water supply as a result of the applicants withdrawal within 72 hours.

(3). A speedy, non-exclusive, low-cost process to fairly resolve disputed claims for mitigation between the applicant and any claimant.

(4). The requirement that the claimant provide the following documentation: that he is the owner of the well; documentation that the well was constructed and operated prior to the initiation of the applicant's withdrawal; the depth of the well, the pump, and screens and any other construction information that the claimant possesses; the location of the well with enough specificity that it can be located in the field; the historic yield of the well, if available; historic water levels for the well, if available; and the reasons the claimant believes that the applicant's withdrawals have caused an adverse impact.

9. DRAWDOWN LIMIT RO receives and concurs with the Technical Evaluation Report (see attachment C1) completed by CO modeling staff to determine if the proposed withdrawal in combination with all existing lawful withdrawals will not lower water levels, in any confined aquifer that the withdrawal impacts, below a point that represents 80% of the distance between the historical prepumping water levels in the aquifer and the top

of the aquifer. Compliance with the 80% drawdown criterion will be determined at the points that are halfway between the proposed withdrawal site and the predicted one foot drawdown contour based on the predicted stabilized effects of the proposed withdrawal.

CO modeling staff shall determine and document the elevation of the 80% critical surface in the Technical Evaluation Report. If the results documented in the Technical Evaluation Report show that ground water levels will stay above this critical surface throughout the area of impact this criterion will be satisfied. If ground water levels drop below the critical surface in the area of impact, CO modeling staff will determine the locus of all points that are one half the distance between the withdrawal point and the one foot drawdown criteria and demonstrate that water levels remain above the critical surface at those points. This criterion must be met in each aquifer that the proposed withdrawal will impact.

10. OTHER INFORMATION **RO staff shall require two (2) copies of the geophysical logs (spontaneous potential, single point resistance, 16/64 short and long normal resistivity, and natural gamma) for all new or proposed production wells.** This requirement may be waived with CO concurrence on a case by case basis.

In addition to the evaluation criteria listed above, staff may require any or all of the following information prior to considering an application complete. RO staff should identify and require additional information at the preapplication conference if possible. RO/CO staff may require all or some of the following information:

(1) Information needed by CO modeling staff to conduct an evaluation of the area of impact and 80% drawdown criterion such as the installation of monitoring wells and the collection and analysis of drill cuttings, continuous cores, geophysical logs, camera survey, water quality samples or other hydrogeologic information necessary to characterize the aquifer system present at the proposed withdrawal site. RO/CO may require one or more monitoring wells in the production aquifer and the placement of monitoring wells in the aquifer above and/or below the production aquifer to determine leakance. (see attachment U for hydrogeologic testing guidance) In cases where construction information does not exist for an existing well, staff may require a camera survey to determine screen intervals. All geophysical logs shall be referenced by the DEQ well number. Drill stem or packer tests may be required to collect water quality samples in order to delineate the 250 mg/l chloride boundary. Drill cuttings shall be collected at 10 foot intervals and a geologist's log submitted for at least one well in each new well field. The need for continuous cores will be determined on a case by case basis.

(2) The completion of constant rate aquifer tests to determine aquifer characteristics at the proposed withdrawal site. (see the attached aquifer/pump test procedures in attachment U).

(3) Information required by CO modeling staff to conduct an evaluation of the potential for the proposed withdrawal to cause salt water intrusion into any portions of any aquifers or the movement of waters of lower quality to areas where such movement would result in adverse impacts on existing ground water users or the ground water resource. RO/CO staff will consider the proximity of salt water sources to the proposed withdrawal when determining the need for the evaluation of the potential for salt water intrusion. RO/CO reviews shall review the Technical Evaluation Report to determine if the one foot drawdown contour intersects high chloride ground water (> 250 mg/l). An evaluation of the potential for the proposed withdrawal to cause salt water intrusion will be conducted by CO modeling staff when the one foot drawdown contour for any affected aquifer intersects high chloride ground water (> 250 mg/l). Vector analysis of ground water flow models may be used to evaluate the potential for salt water intrusion.

(4) Other information that the staff believes is necessary to evaluate the application.

If the application submittal is technically incomplete, the RO shall produce a technical deficiency letter and return the modified original application form, application attachments or the entire submittal to the applicant with appropriate notations (see attachment E2) and retain the copy of the application. Applicants will be given 10-30 days, at the discretion of the RO, to correct all deficiencies. If requested by the applicant, the RO may extend the deadline no more than 30 days.

The RO shall evaluate the applicant's response to the technical deficiency letter within 30 days of receipt to determine if the applicant has addressed all deficiencies.

If the RO receives a response within the specified time period correcting all deficiencies, and the application demonstrates compliance with all criteria contained in this section, the RO shall prepare a draft permit as described in section E.

If the applicant fails to respond within the specified time period, the RO shall notify the applicant in writing that the application is no longer being considered and has lost its priority for evaluation.

If the RO receives a response but all deficiencies are not satisfactorily corrected within the specified time period, the RO may either return the original application for correction and re-submittal of deficient items or simply notify the applicant in writing of deficient items. In either case, the RO must notify the applicant in writing that the application is no longer being considered and has lost its priority for evaluation. The applicant may establish a new priority of evaluation if they correct all deficiencies within 60 days of the end of the time period established to correct technical deficiencies.

When an applicant is unable to demonstrate compliance with all criteria contained in this section, or the results of the Technical Evaluation Report are not in compliance with all criteria contained in this section, the RO shall recommend denial of the application. The RO shall notify the applicant in writing of the department's decision to recommend to the Board denial of the application. The letter shall state the reason(s) for denying the application (attachment N). The applicant shall be informed of the option to modify the application in order to achieve a favorable recommendation, withdraw the application, or proceed with the processing of the original application. If the applicant modifies the application to comply with all criteria, the RO shall proceed with production of a draft permit. If the applicant elects to withdraw the application no ground water withdrawal permit will be issued. If the applicant elects to proceed with the original application, the RO shall recommend denial of the application to the Regional Director as described in section I.

E. Draft Permit Development When an applicant demonstrates compliance with all criteria contained in section D. above the RO shall:

1. Prepare a draft ground water withdrawal permit. The draft permit (see attachment M) shall contain conditions, withdrawal limitations, standards and other requirements applicable to the permit, monitoring and reporting requirements, requirements for mitigation of adverse impacts and requirements for a water conservation and management plan. All ground water withdrawal permits shall contain an annual and monthly ground water withdrawal limit. The RO may draft ground water withdrawal permits with other withdrawal limitations as appropriate, including, but not limited to, daily, weekly, or seasonal withdrawal limits.

2. Prepare a draft public notice of the proposed issuance as required in section F. below (attachment H).

3. Prepare a draft public notice authorization form indicating the newspaper of publication (attachment G).

4. Transmit copies of the area of impact maps to the applicant for inclusion into the mitigation plan. A copy of the Technical Evaluation Report will be provided by the CO modeling staff upon request from the applicant.

   The RO shall prepare a transmittal letter (attachment D) and mail a copy of the draft permit, public notice, area of impact maps, and public notice authorization form to the applicant. Following receipt of the applicants agreement with the draft permit and the signed public notice authorization form, the RO shall proceed with required public participation procedures described in section F. below.

   If the applicant fails to submit the signed public notice authorization form by the date required, the RO shall contact the applicant by telephone to determine if they are unwilling to accept the draft permit, including all terms and conditions. When an applicant is unwilling to accept the terms contained in a draft permit, or is unable to reach a negotiated compromise, or refuses to withdraw the application, the RO shall recommend denial of the application. The RO shall notify the applicant in writing of the department's decision to recommend to the Board denial of the application (attachment N2). If the applicant elects to accept the draft permit the RO shall proceed with required public participation procedures described in section F. below. If the applicant refuses to accept the draft permit the RO shall recommend denial of the application to the Regional Director as described in section I.

5. The RO shall transmit one copy of the of the final application including hydrogeologic information such as geophysical logs, aquifer test data, geologist logs, and GW-2 forms to the Ground Water Program Manager.

NOTE: The RO shall copy the Ground Water Program Manager on all hydrogeologic, well construction and well status information submitted by the permittee subsequent to permit issuance as required in the permit.

F. Draft Permit Public Notice The RO shall prepare a notice of the draft permit to be used to advertise the agency's tentative decision to issue a ground water withdrawal permit (attachment H). The notice shall include:

   1. Name and address of the applicant. If the location of the proposed withdrawal differs from the address of the applicant the notice shall also state the location in sufficient detail such that the specific location may be easily identified.

   2. Brief description of the beneficial use that the ground water withdrawal will support.

3. The name and depth below ground surface of the aquifer(s) that will support the proposed withdrawal.

4. The yearly and monthly amount of ground water withdrawal requested expressed as an average annual gallonage per day (if appropriate).

5. A statement of the tentative determination to issue a permit.

6. A brief description of the final determination procedure.

7. The address and phone number of a specific person at the department's RO from whom further information may be obtained.

8. A brief description of how to submit comments and request a public hearing.

Each RO shall maintain the current mailing list for all local governments within each GWMA within the RO area. The RO shall mail a copy of the draft permit notice to each local governing body within the GWMA within which the proposed withdrawal will occur on or before the date of public notice (see attachment F for Local Govt. Trans. Letter). The RO shall also provide advance notice via e-mail or other means to the DEQ External Affairs Public Relations Coordinator when a draft permit notice is scheduled to be published.

For new or expanded withdrawals which will require a waterworks operation permit from the Virginia Department of Health, the RO shall forward a copy of the draft permit to the Virginia Department of Health. A ground water withdrawal permit will not be issued until the Department of Health issues a waterworks operation permit, or equivalent.

The RO shall send the draft permit notice (attachment H), a transmittal letter requesting that the notice be published (attachment I), and the completed public notice authorization form (attachment G) to a newspaper of general circulation in the area affected by the withdrawal. The RO shall ensure that the notice of the application is advertised by the receipt of proof of publication from the newspaper.

The RO shall accept comments on the draft permit for a period of 30 days following the date of the public notice. The RO shall review and consider all comments received during the 30 day public comment period to determine if there is significant public interest and substantial, disputed issues relevant to the issuance of the permit.

If there are no disputed issues, or if the RO can resolve all disputed issues by modifying draft permit conditions or other means, and there is not a specific

request for a public hearing, the RO shall proceed with permit issuance as described in section H. below. The RO should make every attempt to resolve disputed issues to preclude the need for a public hearing.

If the draft permit is modified to resolve disputed issues the RO may consult with the Ground Water Program Manager to determine if readvertisment of the modified draft permit is required.

G. Draft Permit Public Hearing The RO shall comply with all requirements for informal public hearings to consider ground water withdrawal permit applications as they are described in the Agency's internal procedures for public hearings, Part I, Informal Hearings for Permit Actions (attachment R).

If the RO determines that there is significant public interest and there are disputed issues that cannot be resolved, or if there is a written request for a public hearing, the RO shall prepare an authorization cover memo and authorization memo (attachment J1 and J2) for the Regional Director's consideration to hold a public hearing based on the staff recommendations. If a public hearing is requested in writing, the RO shall include the name of the person and the reason for the request. Generally, if there is a written request for a public hearing and the RO can resolve all disputed issues including issues raised by the requestor, the permit writer should recommend that the request for a public hearing be denied. Generally, if disputed issues can not be resolved or the permit writer perceives that a particular application is particularly controversial, the RO should recommend that the public hearing request be granted. The Regional Director will review the RO recommendation for determination on the necessity of an informal hearing.

In cases where the RD determines that a public hearing is not necessary, the RO shall inform the person(s) requesting a public hearing that their request is denied (attachment J4) and proceed with permit issuance as described in section H.

Should an informal hearing be held on the application, the RO may require additional information from the applicant to address issues raised by public comments. Any such information is to be made available to the public for 30 days prior to the hearing and for some period of time to be determined following the hearing.

Following the public hearing, the RO shall consider all public responses and receipt of any additional technical data in determining a recommendation on permit issuance as required by the public hearing procedures (attachment R). If the draft permit is in compliance with, or may be modified to obtain compliance with, all criteria contained in section D. above, Ground Water Withdrawal Regulations (9 VAC 25-610-10 et seq), and the Ground Water Management Act

of 1992, the RO shall recommend issuance of the ground water withdrawal permit as described in section H. If information is presented in the public hearing that demonstrates that the draft permit is not in compliance with the criteria listed above and the permit can not be modified to obtain compliance, the RO shall recommend denial of the ground water withdrawal permit as described in section I.

If the draft permit is modified to resolve disputed issues the RO may consult with the Ground Water Program Manager to determine if readvertisment of the modified draft permit is required.

H. Permit Issuance The RO shall prepare and forward a complete permit package to the Regional Director, Regional Permits Manager or Remediation Manager, within 15 days of the close of the public comment period for all approvable ground water withdrawal applications that do not require a public hearing. The permit package shall contain the permit and conditions (attachment M), a well identification plate stamped with the DEQ well number, a ground water withdrawal permit transmittal letter (attachment L), an approval/staff recommendation memo (attachment K1) and envelopes and labels with the owner's addresses. Following Regional Director, Regional Permits Manager or Remediation Manager's signature, the RO shall mail the permit to the applicant and copy the Ground Water Program Manager.

If the application is for a public water supply regulated by the Virginia Department of Health, the permit package shall also include a copy of the Virginia Department of Health Waterworks Operation Permit, or equivalent, and the permit shall contain a special condition that states "Daily withdrawals shall be consistent with the requirements and conditions of the Virginia Department of Health Waterworks Operation Permit #_____ (or equivalent document reference)." A final ground water withdrawal permit shall not be issued for a public water supply regulated by the Virginia Department of Health prior to the issuance of the appropriate waterworks operation permit.

In cases where all statutory and regulatory criteria has been met to issue a ground water withdrawal permit but a Waterworks Operation Permit, or equivalent, has not been issued by the State Health Department, an intent to issue letter (attachment AA) may be mailed to the applicant.

Ground water withdrawal applications that require public hearings shall be processed as required by the Agency's internal procedures for public hearings, Part I, Informal Hearings for Permit Actions (attachment R) for consideration by the Board. The RO shall develop a permit package that contains the permit and conditions (attachment M), a well identification plate stamped with the DEQ well number, a ground water withdrawal permit transmittal letter (attachment L) and envelopes and labels with the owner's addresses. (This final permit package will

be the appropriate documentation as required for permit issuance in the public hearing procedures.) The permit writer shall ensure that the final permit package is available for the RD's signature on the day of the Board meeting. Following RD signature, the RO shall mail the permit to the applicant.

I. Permit Application Denial When an applicant is unable to demonstrate compliance with all criteria contained in section D. above, and is unwilling to modify his application to obtain compliance with those criteria, or is unwilling to withdraw the application, the permit writer shall recommend denial of the application. The permit writer shall recommend that a public hearing be held for any ground water withdrawal application that is recommended to be denied. The RO shall public notice the Agency's intent to deny the application and hold an informal public hearing. The RO shall comply with all requirements for informal public hearings to consider ground water withdrawal permit applications as they are described in the Agency's internal procedures for public hearings, Part I, Informal Hearings for Permit Actions (attachment R). The permit writer shall prepare an authorization cover memoranda and authorization memoranda (attachment J1 and J2) for the RD recommending that a public hearing be held based on the staff recommendation to deny the application.

Following the public hearing, the RO shall consider all public responses and receipt of any additional technical data in determining a recommendation on application denial as required by the public hearing procedures (attachment R). If the application is not in compliance with all criteria contained in section D. above, Ground Water Withdrawal Regulations (9 VAC 25-610-10 et seq.), and the Ground Water Management Act of 1992, the RO shall recommend denial of the application to the Board the applicant of the Board's decision to deny the ground water withdrawal application.

The permit writer shall prepare a letter for the RD's signature to the applicant informing them that the application has been denied (attachment N3). The RO shall assure that the final letter is available for the RD's signature on the day of the Board meeting.

J. Voluntary Permit Revocation

RO shall provide Revocation Agreement Form (attachment W) to permittee and ask that they complete it. RO shall draft the Board book memo (attachment X) and transmit this memo along with a copy of the completed revocation agreement form to the appropriate Division of Policy and Legislation staff with a request to include on the Board's agenda. After the Board meeting, RO shall prepare a Board Minute and transmit the revocation notification letter (attachment Y) via certified mail to the ex-permittee.

K. Transfer of Ownership

In accordance with 9 VAC 25-610-320, an owner may request an automatic transfer of ownership provided the current owner notifies the RO 30 days in advance of the proposed transfer of ownership. Upon receipt of written notification, the RO shall transmit the appropriate cover letter and change of ownership form (attachments Z1 and Z2) to the existing owner. Upon receipt of the transfer of ownership form, the RO shall amend the permit or special exception to reflect the change of ownership and forward a copy of the permit/special exception to the new owner. An amended copy of the permit/special exception shall be forwarded to the Ground Water Program Manager.

L. Application Fee Refund

In cases where an applicant has submitted a $2000.00 permit fee for an expanded permit application but elects to accept a permit based on historic use, the RO shall request the DEQ finance department to issue a refund to the applicant less the $400.00 fee for a historic based permit (attachment BB).

M. Minor Amendment

In accordance with 9 VAC 25-610-330, the RO may make minor amendments to an existing permit without following the public involvement procedures. The RO shall prepare and forward a MODIFIED permit package to the Regional Director, Regional Permits Manager or Remediation Manager. The permit package shall contain the MODIFIED permit and conditions (attachment M), a replacement well identification plate stamped with the DEQ well number, a ground water withdrawal permit transmittal letter (attachment L1), an approval/staff recommendation memo (attachment K1) and envelopes and labels with the owner's addresses. Following Regional Director, Regional Permits Manager or Remediation Manager's signature, the RO shall mail the permit to the applicant and copy the Ground Water Program Manager.

ATTACHMENTS

A Ground Water Withdrawal Permit Application Transmittal Letter

B Ground Water Withdrawal Permit Application

B1 Model Mitigation Plan

B2 Preapplication Conference Meeting Form

C Local Government Ordinance Form

C1 Technical Evaluation Report Outline

D Draft Permit Transmittal Letter

E Application Deficiency Transmittal Letter

F Local Government Body Transmittal Letter

G Public Notice Authorization Form

H Public Notice Format

I Transmittal Letter to Newspaper for Publishing Public Notice

J Routing Form and Example Memo for Hearing Authorization

K Approval Memorandum/ Staff Recommendations

L Ground Water Withdrawal Permit Transmittal Letter

L2 Modified Ground Water Withdrawal Permit Transmittal Letter

M Ground Water Withdrawal Permit Form

N Transmittal Letters for Denial of a Ground Water Withdrawal Application

O Water Well Completion Report (Form GW-2)

P Ground Water Withdrawal Reporting Form

Q Procedural Rule No. 1

ATTACHMENTS (CONTINUED)
Effective Date June 1, 1999

R Hearing Procedures

S Ground Water Management Act of 1992

T Ground Water Withdrawal Regulations

U Hydrogeologic Testing Publications (EPA, NJ, MD, Fla)

V GWMA map

W Revocation Agreement Form

X Regional Office Memo for Board Book

Y Revocation Notification Letter

Z Owner Transfer Forms and Cover Letters

AA Intent to Issue Letter

BB Permit Fee Refund Memo

ATTACHMENT A

1. Ground Water Withdrawal Application Request Transmittal Letter

Ground Water Withdrawal Application Request Transmittal Letter
(Modify Where Appropriate)

Date

Applicant Address

Dear Applicant:

This letter is in response to your inquiry regarding new ground water usage. I have enclosed an Application for a Ground Water Withdrawal Permit, a model mitigation plan, a Public Notice Authorization Form, a Local Government Ordinance Form (LGOF), a copy of the Ground Water Withdrawal Regulations, a Water Well Completion Report, and a Permit Fee Form. **Please note that a Preapplication meeting is required prior to submittal of an application.** Please contact me to schedule this meeting at your convenience.

Requests for new or additional withdrawals are evaluated as new uses and require an application. The enclosed Ground Water Withdrawal Permit Application and **one copy** should be submitted for the total amount of ground water withdrawal requested for each withdrawal system. A "withdrawal system" is defined as: (1) One or more wells or withdrawal points located on the same or contiguous properties under common ownership for which the withdrawal is applied to the same beneficial use, or (2) Two or more connected wells or withdrawal points which are under common ownership but not necessarily located on contiguous properties.

NOTE : THIS PARAGRAPH SHOULD BE INCLUDED WHEN APPROPRIATE

The "requested withdrawal amount" on the application should be for the full withdrawal. The amount documented by your historical withdrawal on the Preliminary Application will be a part of this full withdrawal. The application review of this application for an expanded withdrawal will result in the issuance of one new permit.

All nonagricultural applicants are required to pay permit application fees. The fee for this permit application for a new or expanded withdrawal is $2,000. Please use the addressed stamped envelope to send the fee and the white and yellow copies of the fee form to DEQ accounting office in Richmond. Please include the pink copy of the fee form and a copy of the check with the application to the appropriate regional office.

I would like to reemphasize that it is the well owner's responsibility to supply the DEQ with a properly completed application and necessary accompanying information. **Material changes in the nature of the proposed withdrawal (significant change of well location, construction, withdrawal amount, etc.) requested by the applicant, after technical evaluation has been completed by DEQ staff, may require submittal of a new application and $2,000 dollar application fee. A new application and fee will normally be required when the nature of the requested changes results in the need to conduct a second technical evaluation.**

Use of greater than (300,000 gallons per month of ground water) or (your currently permitted amount of ground water) without the proper permit from the Department of Environmental Quality is a violation of the Ground Water Management Act of 1992.

If I can be of further assistance, please do not hesitate to call me at (xxx) xxx-xxxx.

Sincerely,

RO Staff Name
Title

Enclosures
cc:

(document name)

ATTACHMENT B

1. Application Cover Page
2. Application Instructions
3. Application

Effective Date June 1, 1999

COMMONWEALTHof VIRGINIA

DEPARTMENT OF ENVIRONMENTAL QUALITY

APPLICATION FOR A GROUND WATER WITHDRAWAL PERMIT

(FOR USE IN GROUND WATER MANAGEMENT AREAS)

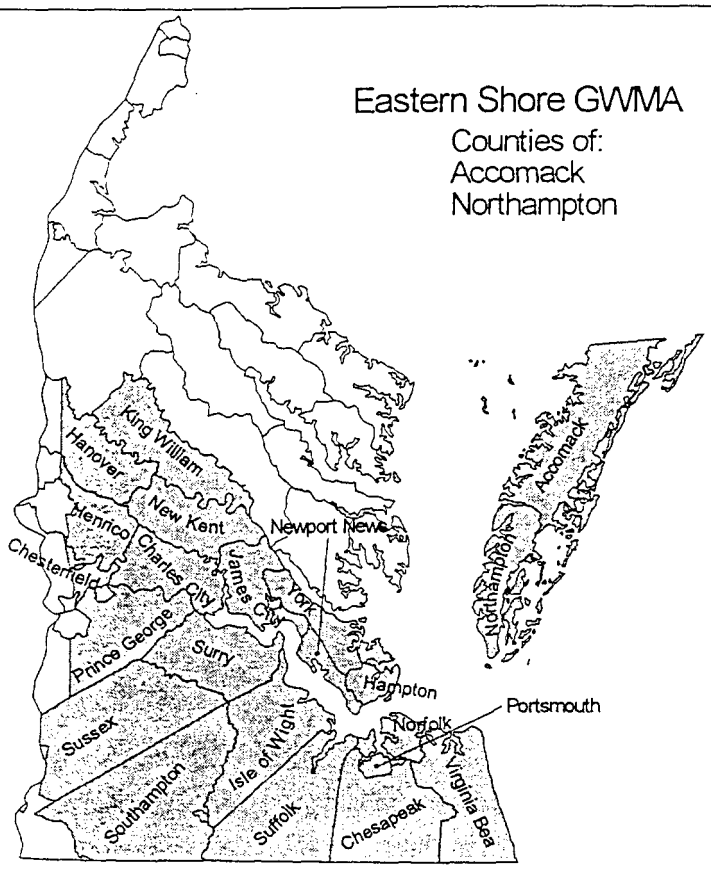

Eastern Virginia GWMA

Counties of:	Cities of:
Isle of Wight	Chesapeake
Prince George	Franklin
Southampton	Hopewell
Surry	Norfolk
Sussex	Portsmouth
Charles City	Suffolk
James City	Virginia Beach
King William	Hampton
New Kent	Newport News
York	Poquoson
Chesterfield*	Williamsburg
Henrico*	
Hanover*	

Central Office

VA Department of Environmental Quality
Division of Water Program Coordination
Office of Ground Water Management
P.O. Box 10009
Richmond, VA 23240-0009
Phone (804) 698-4043

DEQ Regional Offices

VA Department of Environmental Quality
Piedmont Regional Office
Water Division
P.O. Box 6030
Glen Allen, VA 24058
Phone (804) 527-5054

VA Department of Environmental Quality
Tidewater Regional Office
Remediation Section (Ground Water Withdrawal Permits)
5636 Southern Blvd.
Virginia Beach, VA 23462
Phone (757) 518-2119

Submit the completed application and a copy to the appropriate Regional Office as listed below:

Piedmont Regional Office-Charles City, Chesterfield*, Hanover*, Henrico*, King William, Prince George, New Kent, Surry, Sussex, City of Hopewell

Tidewater Regional Office-Accomack, James City, Isle of Wight, Northampton, Southampton, York, City of Chesapeake, City of Franklin, City of Hampton, City of Newport News, City of Norfolk, City of Poquoson, City of Portsmouth, City of Suffolk, City of Virginia Beach, City of Williamsburg

* Only those portions east of I-95 are included in the Eastern Virginia Ground Water Management Area.

APPLICATION INSTRUCTIONS

For Completing a Ground Water Withdrawal Permit Application

WHO MUST APPLY FOR A GROUND WATER WITHDRAWAL PERMIT?

9 VAC 25-610-40 of the Ground Water Withdrawal Regulations prohibits the awal of ground water in a ground water management area without a ground withdrawal permit, except as excluded in 9 VAC 25-610-50.

WHAT WITHDRAWALS ARE EXCLUDED?

(1) Withdrawals of less than 300,000 gallons per month. (2) Temporary construction dewatering withdrawals that do not exceed twenty four months in duration. (3) Withdrawals associated with a state-approved ground water remediation that do not exceed sixty months in duration. (4) Withdrawals for a ground water source heat pump where the discharge is reinjected into the aquifer from which it was withdrawn. (5) Withdrawals from ponds recharged by ground water without mechanical assistance. (6) Withdrawals for the purpose of conducting geophysical investigations, including pump tests. (7) Withdrawals coincident with exploration for and extraction of coal or activities associated with coal mining regulated by the Department of Mines, Minerals, and Energy. (8) Withdrawals coincident with the exploration for or production of oil, gas or other minerals other than coal, unless such withdrawal adversely impacts aquifer quantity or quality or other ground water users within a ground water management area. (9) Withdrawals in any area not declared to be a ground water management area. (10) Withdrawal of ground water authorized pursuant to a special exception issued by the board. (11) Withdrawal of ground water discharged from free flowing springs where the natural flow of the spring has not been increased by any method.

PREAPPLICATION CONFERENCE

A preapplication conference is **required** to discuss application completion, processing and evaluation procedures. A Ground Water Withdrawal Permit Application **WILL NOT** be accepted without a preapplication conference. Additional application information may be required, such as mitigation plans, monitoring well installation, hydrogeologic data collection and report, and pump/aquifer tests. Information required for DEQ staff to evaluate the area of impact will be discussed. Contact the appropriate Department of Environmental C v (DEQ) Regional office to schedule a meeting. Information requested by . aff will be documented on the Preapplication Conference Meeting Form and a copy will be provided to the applicant.

APPLICATION FORMAT

Application for a Ground Water Withdrawal Permit requires completion of all sections of the attached application. Omission of required information in any section will result in return of the application as incomplete. Corrected applications shall be resubmitted in their entirety.

An application is to be submitted on the forms provided with additional sheets attached, as stated in the application. Do not attach additional sheets in lieu of completing the blanks on the application. If the space provided on the application is insufficient, attach additional sheets as needed. Attachments should clearly identify the part/question of the application form to which they pertain and should be numbered to facilitate review. Attachments should be submitted on 8 1/2" X 11" paper when possible.

APPLICATION INSTRUCTIONS

1. **APPLICANT INFORMATION:** The applicant's official or legal name, Federal Identification Number, phone number and mailing address where correspondence should be sent. Applicants without FINs should enter their individual Social Security Number.

2. **FACILITY/SYSTEM INFORMATION:** Name of the commercial, industrial or agricultural facility or the public water supply system from which the withdrawal will occur. Enter the street address of the facility if different from the address above. If the address is the same, enter "same". If the application is for a withdrawal for a public water supply, with multiple well lots, leave the facility address blank. Give the name, title, and work number of a person who is thoroughly familiar with the operation of the withdrawal ility and with the facts reported in this application and who can be ontacted by DEQ staff if necessary.

3. **TYPE OF APPLICATION:** Check the appropriate action and give the most recent permit number, permit amount, and expiration date. Enter the amount of water needed to support the proposed beneficial use.

4. **TYPE OF USE:** Check the appropriate use types to which the requested withdrawal will be applied. If the withdrawal is to be applied to more than one beneficial use, provide an estimate of the percent of use. If the type of use is a public water supply, estimate the percent of the withdrawal for human consumptive use and attach a complete copy of the Virginia Department of Health Water Works Operation permit, including Engineering Description Sheets, or equivalent.

5. **JUSTIFICATION FOR THE AMOUNT OF WITHDRAWAL REQUESTED:** Briefly describe the nature of your activity (e.g., products produced or services provided) and the proposed beneficial use of ground water. Document and calculate the amount of water needed to produce a product or provide a service. For example: ACME Widget Co. makes widgets. ACME makes 100 widgets per day. 100 gallons of water is needed to make one widget. Therefore, the daily water demand for ACME is 100 widgets per day x 100 gallons of water per widget or 10,000 gallons per day. Provide a schematic showing water flow through the facility/system. Applications for new public water supplies should document need based on low flow plumbing requirements in the Uniform Statewide Building Code. Justification of need based on Health Department wastewater estimates of 400 gallons per day per ERC will **NOT** be accepted.

6. **WASTEWATER TREATMENT AND DISPOSAL:** Check the appropriate method of wastewater disposal if applicable.

7. **WELL LOCATION(S):** Locate all wells (existing, proposed, abandoned, out of service), facility property boundaries and/or water supply service area associated with the application on a (1) United States Geological Survey 7 1/2 minute topographic map, or copies of such maps, and (2) detailed location map of each existing and proposed well. The detailed location map must be of sufficient detail such that all wells may be easily located during site inspections.

8. **EXISTING WELL INFORMATION:** Complete the table for all existing wells associated with the application and attach water well completion reports if available. Note that all wells, including observation and abandoned or out of service wells, should be listed. Every effort should be made to obtain completion reports. This can be accomplished by contacting the well driller, previous employees, Virginia Department of Health or DEQ. Do NOT enter "see attached" on this table. Enter "NA" if well construction information is not available. Enter "none" on the first line if there are no existing wells associated with the application. DEQ well identification plates must be attached to each existing well. Well identification plates can be obtained at the appropriate DEQ Regional office.

9. **PROPOSED WELL INFORMATION:** Complete the proposed well information worksheet for all proposed wells associated with this application. Do NOT enter "see attached" on this table. Contact the appropriate DEQ Regional office to obtain DEQ well identification numbers prior to the start of drilling operations. Refer to the DEQ well identification number on all drilling documentation. A DEQ well identification plate must be attached to each completed well. Identification plates may be obtained from the DEQ Regional offices listed on the front of the application package. Contact the DEQ Regional office at least two weeks prior to the start of drilling operations for each proposed well.

10. **LOCAL AND AREAWIDE PLANNING REQUIREMENTS:** Attach the original notification from the local governing body of the county, city or town in which the withdrawal is to occur that the location and operation of the withdrawing facility is in compliance with all land use, planning and zoning ordinances adopted pursuant to Chapter 22 (§ 15.2-2200 et seq.) of Title 15.2 of the code of Virginia. If the Local Government Ordinance Form (LGOF) is not enclosed, enclose documentation demonstrating that the county, city or town failed to respond within 45 days to such a request made by the applicant by certified mail, return receipt requested (9 VAC 25-610-90 C.2.b).

OVER

11. **LOWEST QUALITY OF GROUND WATER NEEDED:** Attach an evaluation of the lowest quality water needed for the intended beneficial use. The evaluation must include a list of critical water quality parameters with minimal limits which are associated with the type of use. Demonstrate that the ground water withdrawal will originate from the aquifer that contains the lowest quality water that will support the proposed beneficial use.

12. **SOURCES OF WATER OTHER THAN GROUND WATER:** Attach an evaluation of sources of water supply, other than ground water, including sources of reclaimed water. Include information as to the proximity to public water supplies, surface water sources and sources of reclaimed water.

13. **WATER CONSERVATION AND MANAGEMENT PLAN:** Attach a water conservation and management plan to include, at a minimum, the following:(1) Requirements for the use of water saving plumbing and processes including, where appropriate, the use of water saving fixtures in new and renovated plumbing as provided in the Uniform Statewide Building Code;(2) A water loss reduction program; (3) A water use education program;(4) An evaluation of potential water reuse options; (5) Requirements for mandatory water use reductions during water shortage emergencies declared by the local governing body or the Director of DEQ, including, where appropriate, ordinances prohibiting the waste of water generally and requirements for mandatory water use restrictions, with penalties during water shortage emergencies.

14. **AREA OF IMPACT OF THE PROPOSED WITHDRAWAL:** Pursuant to 9 VAC 25-610-110 D.2. of the Ground Water Withdrawal Regulations, DEQ staff will perform a technical evaluation to determine the areas of any aquifers that will experience at least one foot of water level decline due to the proposed withdrawal. Hydrogeologic information such as, but not limited to, aquifer properties (transmissivity and storage coefficient) obtained from aquifer testing may be required at or following the preapplication conference.

15. **GROUND WATER PERMITTEES IMPACTED BY THE PROPOSED WITHDRAWAL - MITIGATION PLAN:** Pursuant to 9 VAC 25-610-110 D.3.g. of the Ground Water Withdrawal Regulations, DEQ staff will determine if the predicted area of impact extends beyond the property owned by the applicant and/or other ground water users exist within the area of impact. Since the area of impact most often extends beyond the applicant's property, it is recommended that a mitigation plan be submitted at the time of application to reduce application processing time. In the event that the results of the technical evaluation shows that the area of impact remains on the applicants property or there are no ground water users within the area of impact, DEQ staff will inform the applicant that a mitigation plan is not required. A model mitigation plan is included in the ground water permit application package. Mitigation plans must, at a minimum, contain the following features: (1) The rebuttable presumption that water level declines that cause adverse impacts to existing wells within the area of impact are due to the proposed withdrawal; (2) A commitment by the applicant to mitigate undisputed adverse impacts due to the proposed withdrawal in a timely fashion; (3) A speedy, non-exclusive, low-cost process to fairly resolve disputed claims for mitigation between the applicant and any claimant; (4) The requirement that the claimant provide the following documentation when available; (a) That the claimant is the owner of the well and that the well was constructed and operated prior to the initiation of the applicant's withdrawal; (b) Well construction,water levels, historic yield and location of the claimant's well(s); (c) The reasons the claimant believes that the applicants withdrawals have caused an adverse impact on the claimant's well(s).

16. **80 % DRAWDOWN CRITERION:** Pursuant to 9 VAC 25-610-110 D.3.h. of the Ground Water Withdrawal Regulations, DEQ staff will conduct an evaluation to demonstrate that the proposed withdrawal in combination with all existing lawful withdrawals will not lower water levels, in any confined aquifer that the withdrawal impacts, below a point that represents 80% of the distance between the historical prepumping water levels in the aquifer and the top of the aquifer at the points that are halfway between the proposed withdrawal site and the predicted one foot drawdown contour based on the predicted stabilized effects of the proposed withdrawal.

17. **ADDITIONAL INFORMATION REQUESTED BY THE BOARD:** In addition to information requested at the preapplication conference, DEQ staff may require hydrogeologic and geophysical information necessary to characterize the aquifer system during application processing and review to obtain a complete application.

The application must be signed in accordance with the Ground Water Withdrawal Regulation 9 VAC 25-610-150 as follows:

FOR A CORPORATION: by a responsible corporate official. For purposes of this section, a responsible corporate official means (1) a pres secretary, treasurer, or vice president of the corporation in charge principal business function, or any other person who performs similar policy or decision-making functions for the corporation, or (2) the manager of one or more manufacturing, production, or operating facilities employing more than 250 persons or having gross annual sales or expenditures exceeding $25,000,000 (in second-quarter 1980 dollars), if authority to sign documents has been assigned or delegated to the manager in accordance with corporate procedures.

FOR A MUNICIPALITY, STATE, FEDERAL OR OTHER PUBLIC AGENCY, by either a principal executive officer or ranking elected official. (A Principal executive officer of a Federal, Municipal, or State agency includes the chief executive officer of the agency or head executive officer having responsibility for the overall operation of a principal geographic unit of the agency).

FOR A PARTNERSHIP OR SOLE PROPRIETORSHIP, by a general partner or the proprietor, respectively.

APPLICATION SUBMITTAL

The original signed application and one (1) copy shall be submitted to the appropriate Department of Environmental Quality Regional office. Refer to the front page of the application package for Regional Office addresses and a list of cities and counties covered by the Regional Offices.

PERMIT APPLICATION FEES

The Permit Fee Regulation 9 VAC 25-20-10 et seq. requires that an application fee be paid at the time an application is submitted for a new or expanded ground water withdrawal permit. Permit fees for agricultural withdrawal permits are not required. The fee for issuance/reissuance is $2,000. The fee for a pe modification is $1,000. The check or money order should be payable tc Treasurer of Virginia - DEQ. A permit application fee form will be included in application package. Please submit the appropriate permit fee and the white and yellow sheets to DEQ -Receipts Control, P.O. Box 10150, Richmond, VA 23240. The pink copy and a copy of the check or money order will need to be sent with the completed permit application to the appropriate Regional Office of the DEQ. Permit processing cannot be initiated until the fee is submitted.

APPLICATION PROCESSING

DEQ staff will review the application for completeness. Applicants who have failed to submit a complete application and attachments will be requested by DEQ staff, in writing, to furnish such information as is necessary to allow processing of the application. The application will be considered incomplete, and processing will be suspended until such information is provided. When an application does not accurately describe an existing or proposed ground water withdrawal system, the Board may require the applicant to amend the existing application or submit a new application before the application will be processed.

In accordance with DEQ's ground water withdrawal permit regulation, the application shall be public noticed at the applicant's expense. Details and guidelines for the public notice publication will be sent to the applicant after the application has been deemed complete by the staff.

The DEQ Regional Office will recommend approval of the application provided:

(1) Inquiries resulting from Public Notice can be satisfactorily answered by the staff, and

(2) The ground water withdrawal activities proposed comply with Chapter 25 of the code of Virginia and the Ground Water Withdrawal Regulations.

If the inquiries resulting from Public Notice can not be satisfactorily answered the staff, a public hearing may be necessary, and the issuance of the permit wil decided by the Regional Office Director or the seven citizen members of the State Water Control Board.

COMMONWEALTH of VIRGINIA
DEPARTMENT OF ENVIRONMENTAL QUALITY

APPLICATION FOR A GROUND WATER WITHDRAWAL PERMIT (FOR USE IN GROUND WATER MANAGEMENT AREAS)

PREAPPLICATION CONFERENCE DATE: _____

1. **APPLICANT INFORMATION:** FIN/SSN: _____

Applicant: _____ Phone: _____

Applicant Address: _____
(Street, City, State, Zip Code)

2. **FACILITY INFORMATION:**

Facility/System Name: _____

Facility Address: _____
(If Applicable, Street, City, State, Zip Code)

Contact Name: _____ Title: _____ Phone: _____

Fax: _____

Location of Withdrawal Well or Well System: _____
(County/City)

3. **TYPE OF APPLICATION:**

This application is for:

( ) Existing withdrawal, not previously permitted
( ) New withdrawal
( ) Expand or enlarge existing permit No. _____
( ) Modification of permit No. _____
( ) Minor amendment of permit No. _____
( ) Renewal of existing permit No. _____ with modification
( ) Renewal of existing permit No. _____ without modification

Existing withdrawal permit amount _____ gallons per _____(Day,Month,Year)

Date of expiration of existing Ground Water Withdrawal Permit _____

Requested withdrawal amount _____ gallons per year, _____gallons per month

4. **TYPE OF USE:** (Check all that apply)

USE	%USE		%USE
( ) Public Water Supply	___	( ) Aquaculture	___
( ) Industrial	___	( ) Golf Course Irrigation	___
( ) Commercial	___	( ) Landscape Irrigation	___
( ) Fire Protection	___	( ) Nursery	___
( ) Drought Relief	___	( ) Crop Irrigation	___
( ) Livestock Watering	___	( ) Other _____	___

If type of use is public water supply;

Estimate the percentage of the withdrawal for human consumptive use ____ %;

Attach a complete copy of the Virginia Department of Health Water Works Operation Permit and Engineering Description Sheets or equivalent.

OFFICE USE ONLY Application # _____

Date Application Received _____ Date Fee Received _____ Amount _____

Notice Date _____ LGOF Date _____ Returned _____ Date Complete _____

5. JUSTIFICATION FOR THE AMOUNT OF WITHDRAWAL REQUESTED:

Briefly describe the nature of the activity and the proposed beneficial use of ground water.

_____

_____

_____

Documentation of beneficial use: Attach documentation demonstrating that the annual and monthly amount of ground water withdrawal requested is the smallest amount of withdrawal necessary to support the proposed beneficial use and that the amount is representative to support similar uses when adequate conservation measures are employed.

Include a description of the product produced or the service provided, the unit of measure (acres, lbs.,bushels, etc.) of the product or service, the unit of time that the product or service is produced (day, month, year), the amount of water (gallons) required to produce a unit of product or service, and the quantity of the product or service. Include calculations showing the total amount of water required to produce a product or provide a service.

Attach a line drawing showing the water flow through the facility/system. Indicate wells, meter locations, sources of surface intake, and treatment, or other operations generating wastewater. Construct a water balance on the line drawing by showing average flows between intakes, treatment units and discharge points.

Water demand projections: Include documentation to support the intended beneficial use over a ten year permit cycle such as population and water demand projections and expansion plans. Describe special treatment (i.e. RO, EDR) when proposed.

Apportionment of withdrawal to individual wells: Attach an operational pumping schedule for applications with multiple wells. Indicate whether the withdrawal from each well is daily, seasonal or intermittent. Describe the frequency of use and pumping volume for each well for each month in a calendar year.

6. WASTEWATER TREATMENT AND DISPOSAL:

Will wastewater be generated as a result of the withdrawal of ground water?
_____ (Yes/No) If yes, check the appropriate box below.

( ) Septic Tank and Drainfield

( ) Public Sewer _____
(Name of system)

( ) State Waters _____
(Name of water body)

Discharge Permit # _____

( ) Have applied for a discharge permit from the Department of Environmental Quality.

7. WELL LOCATION(S):

Locate all wells (existing, proposed, abandoned, out of service), facility property boundaries and/or water supply service area associated with the application on a (1) United States Geological Survey 7 1/2 minute topographic map, or copies of such maps, and (2) detailed location map of each existing and proposed well. The detailed location map must be of sufficient detail such that all wells may be easily located for site inspection.

8. EXISTING WELL INFORMATION

Complete the well information worksheet for all existing wells associated with this application. **ATTACH** copies of original water well completion reports for each well listed below. DEQ well identification plates must be attached to each existing well. Well identification plates can be obtained at the appropriate DEQ Regional Office.

Well Name	Owner well #	DEQ Well #	Depth (ft.)	Pump Capac. (gpm)	Pump Set (ft)	Well* Type	Well** Status	Screen Interval(s) (ft.)	Office Use Only		
									Latitude	Longitude	El

Attach additional sheets if necessary

* Well Types: (P) Production, (M) Monitoring, (E) Emergency Standby, (R) Drought Relief, (S) Aquifer Storage & Recovery (D) Permanent Dewatering, (O) Other - Specify
** Well Status: (Act) Active, (Abn) Abandoned, (Alt) Altered From the Original Construction, (OSS) Out of Service

9. PROPOSED WELL INFORMATION

Complete the proposed well information worksheet for all proposed wells associated with this application. Contact the appropriate DEQ Regional office to obtain DEQ well identification numbers prior to the start of drilling operations. Reference the DEQ well identification number on all drilling documentation. A DEQ well identification plate must be attached to each completed well. Contact the DEQ RO at least two weeks prior to the start of drilling operations for each proposed well.

Well Name	Owner well #	Depth (ft.)	Pump Capac. (gpm)	Pump Set (ft)	Well* Type	Well** Status	Screen Interval(s) (ft.)	Office Use Only			
								DEQ Well #	Latitude	Longitude	El

Attach additional sheets if necessary

*Well Types: (P) Production, (M) Monitoring, (T) Test, (E) Emergency Standby, (R) Drought Relief, (S) Aquifer Storage & Recovery, (D) Permanent Dewatering, (O) Other - Specify

** Well Status: (NEW) New, (REP) Replacement Well, (ALT) Altered

10. LOCAL AND AREAWIDE PLANNING REQUIREMENTS:

Attach the notification from the local governing body of the county, city or town in which the withdrawal is to occur that the location and operation of the withdrawing facility is in compliance with all ordinances adopted pursuant to Chapter 22 (§ 15.2-2200 et seq.) of Title 15.2 of the code of Virginia.

If the Local Government Ordinance Form (LGOF) is not enclosed, enclose documentation demonstrating that the county, city or town failed to respond within 45 days to such a request made by the applicant by certified mail, return receipt requested (9 VAC 25-610-90 C.2.b).

11. EVALUATION OF THE LOWEST QUALITY WATER NEEDED FOR THE INTENDED BENEFICIAL USE:

Attach an evaluation of the lowest quality water needed for the intended beneficial use. The evaluation must include a list of critical water quality parameters with minimal limits which are associated with the type of use. Demonstrate that the ground water withdrawal will originate from the aquifer that contains the lowest quality water that will support the proposed beneficial use.

12. EVALUATION OF SOURCES OF WATER SUPPLY, OTHER THAN GROUND WATER:

Attach an evaluation of sources of water supply, other than ground water, including sources of reclaimed water. Include information as to the proximity to public water supplies, surface water sources and sources of reclaimed water.

13. WATER CONSERVATION AND MANAGEMENT PLAN:

Provide, as a stand-alone attachment, a water conservation and management plan to include, at a minimum, the following:

- Requirements for the use of water saving plumbing and processes including, where appropriate, the use of water saving fixtures in new and renovated plumbing as provided in the Uniform Statewide Building Code;
- A water loss reduction program;
- A water use education program;
- An evaluation of potential water reuse options;
- Requirements for mandatory water use reductions during water shortage emergencies declared by the local governing body or the Director of DEQ, including, where appropriate, ordinances prohibiting the waste of water generally and requirements for mandatory water use restrictions, with penalties during water shortage emergencies.

14. AREA OF IMPACT OF THE PROPOSED WITHDRAWAL:

Pursuant to 9 VAC 25-610-110 D.2. of the Ground Water Withdrawal Regulations, DEQ staff will perform a technical evaluation to determine the areas of any aquifers that will experience at least one foot of water level decline due to the proposed withdrawal. Hydrogeologic information such as, but not limited to, aquifer properties (transmissivity and storage coefficient) obtained from aquifer testing may be required.

15. MITIGATION PLAN:

Pursuant to 9 VAC 25-610-110 D.3.g. of the Ground Water Withdrawal Regulations, if the DEQ's technical evaluation determines the predicted area of impact extends beyond the property owned by the applicant and/or other ground water users exist within the area of impact, a mitigation plan is required. Since the area of impact most often extends beyond the applicants property, it is recommended that a mitigation plan be submitted at the time of application to reduce application processing time. In the event that the results of the technical evaluation show that the area of impact remains on the applicants property or there are no ground water users within the area of impact, DEQ staff will inform the applicant that a mitigation plan is not required. A model mitigation plan is included in the ground water permit application package.

16. EVALUATION OF THE 80% DRAWDOWN CRITERION:

Pursuant to 9 VAC 25-610-110 D.3.h. of the Ground Water Withdrawal Regulations, DEQ staff will conduct an evaluation to demonstrate that the proposed withdrawal in combination with all existing lawful withdrawals will not lower water levels, in any confined aquifer that the withdrawal impacts, below a point that represents 80% of the distance between the historical prepumping water levels in the aquifer and the top of the aquifer at the points that are halfway between the proposed withdrawal site and the predicted one foot drawdown contour based on the predicted stabilized effects of the proposed withdrawal. Ground water withdrawal permit applications which do not meet the 80% drawdown criteria will be denied.

17. ADDITIONAL INFORMATION REQUIRED BY THE BOARD

In addition to information requested at the preapplication conference, DEQ staff may require hydrogeologic and geophysical information necessary to characterize the aquifer system during application processing and review to obtain a complete application. Information including, but not limited to, the following may be required:

( ) Aquifer testing plan
( ) Pump test (step drawdown test);
( ) Aquifer test (constant rate discharge test);
( ) Monitoring well installation;
( ) Collection and analysis of drill cuttings;
( ) Collection and analysis of continuous core;
( ) Geophysical logs (spontaneous potential, single point resistance, 16/64 short and long normal resistivity, and natural gamma)
( ) Camera survey
( ) Water quality sampling;
( ) Other _____

I certify under penalty of law that this document and all information submitted were prepared under my direction or supervision in accordance with a system designed to assure that qualified personnel properly gather and evaluate the information submitted. Based on my inquiry of the person or persons who manage the system or those persons directly responsible for gathering information, the information submitted is to the best of my knowledge, accurate and complete. I am aware that there are significant penalties for submitting false information including the possibility of fine and imprisonment for knowing violations. I further certify that I am an authorized signatory as specified in the Ground Water Withdrawal Permit Regulation 9 VAC 25-610-10 et seq.

Signature: _____ Date _____

Printed Name: _____

Title: _____

Phone: (_____) _____

ATTACHMENT B1

1. Model Mitigation Plan

MITIGATION PLAN

DEQ GROUND WATER WITHDRAWAL PERMIT NO. _____

OWNER NAME _____

FACILITY NAME _____

LOCATION _____

INTRODUCTION

On _____ (Application Date), _____ submitted a Ground Water Withdrawal Permit Application to the Virginia Department of Environmental Quality (DEQ) to withdraw _____ gallons of ground water per year with a maximum monthly withdrawal limit of _____ gallons. Ground water withdrawals associated with this permit will be utilized to _____

_____

_____.

(Describe the proposed beneficial use in the space above.)

The purpose of this Mitigation Plan is to provide existing ground water users a method to resolve claims that may arise due to the impact of the withdrawal from the _____ well field.

Predicted drawdown of water levels due to the withdrawal(s) from the _____

_____ aquifer(s) are shown in figure(s) ____.

Modeled impacts, as shown on the attached maps, extend beyond the boundary of the ___ _____ facility. Due to these findings, _____ recognizes that there will be a rebuttable presumption that water level declines that cause adverse impacts to existing ground water users within the area of impact are due to this withdrawal. Claims may be made by ground water users outside this area, however, there is a rebuttable presumption that _____ has not caused the adverse impact. _____ proposes this plan to mitigate impacts to existing users and excludes impacts to wells constructed after the effective date of this permit.

CLAIMANT REQUIREMENTS

To initiate a claim, the claimant must provide written notification of the claim to the following address:

Contact Name _____

Title _____

Permittee Name _____

Address _____

City, State Zip Code _____

The claim must include the following information: (a) a deed or other available evidence that the claimant is the owner of the well and the well was constructed and operated prior to the effective date of the permit; (b) all available information related to well construction, water levels, historic yield, water quality, and the exact location of the well sufficient to allow _____ to locate the well on the claimant's property; (c) the reasons the claimant believes that the _____ withdrawal has caused an adverse impact on the claimants well(s).

CLAIM RESOLUTION

_____ will review any claim within five (5) business days. If _____ determines that no rebuttal will be made and accepts the claim as valid, _____ will so notify the claimant and will implement mitigation within thirty (30) business days. If the claim is not accepted as valid, _____ will notify the claimant that (a) the claim is denied or (b) that additional documentation from the claimant is required in order to evaluate the claim. Within fifteen (15) business days of receiving additional documentation from the claimant, _____ will notify the claimant (a) that _____ agrees to mitigate adverse impacts or (b) the claim is denied. If the claim is denied, the claimant will be notified that the claimant may request the claim be evaluated by a three (3) member committee. This committee will consist of one (1) representative selected by _____ , one (1) representative selected by the claimant, and one (1) representative mutually agreed upon by the claimant and _____.

Any claimant requesting that a claim be evaluated by the committee should provide the name and address of their representative to _____. Within five (5) business days of receipt of such notification, _____ will notify the claimant and claimant's representative of the identity of _____ representative and instruct the representatives to select a third representative within ten (10) business days. Representatives should be a professional engineer or hydrogeologist with experience in the field of ground water hydrology. _____ agrees to reimburse the members of the committee for reasonable time spent, at a rate prevailing in the area for experts in the above listed fields, and for direct costs incurred in administering the plan. The claimant may, at his or her option, choose to provide the reimbursement for the member of the committee selected by the claimant and up to half of the reimbursement for the mutual representative.

Within ten (10) business days of selection of the third representative, the committee will establish a reasonable deadline for submission of all documentation it needs to evaluate the claim. Both the claimant and _____ will abide by this deadline.

Within fifteen (15) business days of receipt of documentation, the committee will evaluate the claim and reach a decision by majority vote. The committee will notify the claimant regarding its decision to (a) deny or (b) approve the claim. If the claim is approved, _____

will mitigate the adverse impacts within thirty (30) business days of making the decision or as soon as practical. If the claim is denied by the committee, _____ may seek reimbursement from the claimant for the claimant's committee representative and one half of the 3 rd representative on the committee.

If a claimant within the indicated area of impact indicates that they are out of water, _____ _____ will accept the responsibility of providing water for human consumptive needs within seventy-two (72) hours and to cover the claim review period. _____ reserves the right to recover the cost of such emergency supply if the claim is denied by _____ or found to be fraudulent or frivolous. If _____ denies a claim and the claimant elects to proceed with the three (3) member committee, _____ will continue the emergency water supply at the claimants request during the committee's deliberations but reserves the right to recover the total costs of emergency water supply in the case that the committee upholds the denial of the claim. Similarly, _____ reserves the right to recover costs associated with the claim process if a claim is found to be fraudulent or frivolous.

If it is determined by the committee or shown to the committee's satisfaction that a well operating under a mitigation plan similar to _____ Plan other than those owned and operated by _____ has contributed to the claimed adverse impact, _____

share of the costs associated with mitigation will be allocated in proportion to its share of the impact. Such a determination shall be made by the committee after notification of the third party well owner, giving the third party well owner opportunity to participate in the proceedings of the committee.

PLAN ADMINISTRATION

Nothing in the Plan shall be construed to prevent the Department of Environmental Quality Staff from providing information needed for resolution of claims by the committee.

ATTACHMENT B2

1. Preapplication Conference Meeting Form

COMMONWEALTH of VIRGINIA
DEPARTMENT OF ENVIRONMENTAL QUALITY

PREAPPLICATION MEETING

Date: _____

APPLICATION FOR A GROUND WATER WITHDRAWAL PERMIT

(FOR USE IN GROUND WATER MANAGEMENT AREAS)

1. **APPLICANT INFORMATION:**

Applicant: _____ Phone: _____

Applicant Address: _____
(Street, City, State, Zip Code)

2. **FACILITY INFORMATION:**

Facility/System Name: _____

Facility Address: _____
(If Applicable, Street, City, State, Zip Code)

Contact Name: _____ Title: _____ Phone: _____

Fax: _____ Email: _____

Location of Withdrawal Well or Well System: _____
(County/City)

Requested withdrawal amount _____ gallons per year

Requested withdrawal amount _____ gallons per month

3. **ADDITIONAL INFORMATION REQUIRED**

In addition to information requested at the preapplication conference, DEQ staff may require hydrogeologic and geophysical information necessary to characterize the aquifer system during application processing and review to obtain a complete application. Information including, but not limited to, the following may be required:

( ) Aquifer test plan
( ) Pump test (step drawdown test)
( ) Aquifer test (constant rate discharge test)
( ) Monitoring well installation
( ) Collection and analysis of drill cuttings
( ) Collection and analysis of continuous core
( ) Geophysical logs (spontaneous potential, single point resistance, 16/64 short and long normal resistivity, natural gamma)
( ) Camera survey
( ) Water quality sampling
( ) Other _____
( ) Other _____
( ) Other _____
( ) Other _____

NOTE: **Material changes in the nature of the proposed withdrawal (significant change of well location, construction, withdrawal amount, etc.) requested by the applicant, after technical evaluation has been completed by DEQ staff, may require submittal of a new application and $2,000 dollar application fee. A new application and fee will normally be required when the nature of the requested changes results in the need to conduct a second technical evaluation.**

Comments: _____

_____

_____

Preapplication Conference Meeting
Attendees List

Date _____

Name	Representing	Phone

ATTACHMENT C

1. Local Government Ordinance Form

SUBJECT: LOCAL AND AREAWIDE PLANNING REQUIREMENTS
TO: Applicants for Permits to Withdraw Ground Water (__[Facility Name]__)

9 VAC 25-610-90.C.2.b of the Ground Water Withdrawal Regulation states:

"The application shall include notification from the local governing body of the county, city or town in which the withdrawal is to occur that the location and operation of the withdrawing facility is in compliance with all ordinances adopted pursuant to Chapter 11 (§ 15.1-427 et seq.) of Title 15.1 of the Code of Virginia. If the governing body of any county, city or town fails to respond within 45 days following receipt of a written request by certified mail, return receipt requested, by an applicant for certification that the location and operation of the proposed facility is consistent with all ordinances adopted pursuant to Chapter 11 (§ 15.1-427 et seq.) of Title 15.1, the location and operation of the proposed facility shall be deemed to comply with the provisions of such ordinances for the purposes of this chapter;

In accordance with this section, new applications for permits to withdraw ground water will not be considered complete until the information below is submitted to the Virginia Department of Environmental Quality (DEQ) Regional Office.

To: _____
(County, City, or Town Administrator/Manager)

I am in the process of completing a DEQ application form for a permit to withdraw ground water. In accordance with Chapter 11 (§15.1-427 et seq.) of Title 15.1 of the Code, I request that you sign one of the three statements below certifying that the project described in my attached application is, or is not, in compliance with your local ordinances. Please note that the above referenced regulation states that if this form was sent to you by certified mail with return receipt requested, and you do not return it within 45 days, I will forward to DEQ a copy of my return receipt with my application and they will process it as if the facility being permitted were consistent with your local ordinances. Please return this form to:

Applicant's address) Return to: _____

_____

_____

_____

I hereby certify,

_____ (1) that the proposed location, and operation of the facility is in compliance with all ordinances adopted pursuant to Chapter 11 (§15.1-427 et seq.) of Title 15.1 of the Code

or

_____ (2) that no local ordinances are in effect pursuant to Chapter 11 (§15.1-427 et seq.) of Title 15.1 of the Code

or

_____ (3) that the proposed location, and operation of the facility is not in compliance with all ordinances adopted pursuant to Chapter 11 (§15.1-427 et seq.) of Title 15.1 of the Code.

_____ _____
Signature Title

_____ _____
Print Name Date

rev. 5/25/99

ATTACHMENT C1

1. Technical Evaluation Report Outline

Technical Evaluation Report

Introduction
- Purpose of the modeling study
- Description of applicant and withdrawal request

Site Description
- General description of site
- Description of existing/proposed wells
- Site Map (regional)
- Site Map (showing existing/proposed well locations)

Hydrogeologic Framework
- Description of geologic setting
- Areal distribution of geologic setting, composition, depositional environment
- Geophysical logs and interpretations
- Well completion reports
- Stratigraphy and Areal Extent of Aquifers and Confining Units
- Hydraulic Characteristics of Aquifers - Aquifer properties
- Existing Data - hydraulic conductivity, transmissivity, storativity
- Aquifer Tests
  - Description and justification of aquifer test and analysis method
  - Raw data
  - Analysis and results
- Methods used to estimate aquifer properties
- Field measured values of hydraulic head
- Water Quality

Conceptual Model
- Hydraulic and physical boundaries
- Rationale for spatial variation of hydraulic properties
- Simplifying assumptions

Numerical Model Design and Results
- Code / Model
  - Justification for model (code) selection
  - Modifications to code (if any)
  - Reference works (USGS refs for CPM and Eastern Shore Model)
  - Relationship between conceptual and numerical models
  - Description of Model Grid, Boundaries, and Internal Sources and Sinks
  - Assumptions and field data to formulate the conceptual model, to set reasonable ranges of parameter values, to calculate initial conditions, to calibrate model, to estimate water balance
  - Boundary conditions
  - Initial conditions

Technical Evaluation Report (continued)

- Model Calibration and Verification
  - Adjusted parameters
  - Criterion of calibration (minimize difference between observed and predicted water levels)
  - Available data
  - Description of model calibration simulations
  - Results of model calibration simulations
- Sensitivity Analysis
  - Adjusted parameters
  - Description of sensitivity analysis simulations
  - Results of sensitivity analysis simulations
- Predictive Simulations
  - Description of predictive simulations
  - Results of predictive simulations
    - Potentiometric Surfaces
    - Drawdown Contours
    - Area of Impact – 1 foot drawdown contour
    - 80% drawdown criteria
  - Analysis of results of predictive simulations

Model Limitations
- Assumptions
- Reliability of calibration and sensitivity analysis in context of assumptions
- Degree of uncertainty in predictive simulations

Summary and Conclusion

Appendices
- Model input data
- Model output results

ATTACHMENT D

1. Draft Permit Transmittal Letter

Draft Permit Transmittal Letter

DEQ RO Letterhead

CERTIFIED MAIL
RETURN RECEIPT REQUESTED

Applicant's Address

Dear Applicant:

This is to advise you that the Department of Environmental Quality is considering issuance of a ground water withdrawal permit to (facility name). Enclosed is a copy of the draft Ground Water Withdrawal Permit for your facility. Please review the draft permit package including the Special Conditions carefully, and provide written acceptance, rejection, or comments regarding the draft permit's conditions by [date, 15 days from the date mailed to applicant].

Certain public notice and public participation procedures must be complied with before the actual permit can be issued. They are as follows:

1. The attached Public Notice must be advertised once in a newspaper of general circulation in the area affected by the withdrawal. The applicant is responsible for authorizing payment for the public notice. Enclosed is a Public Notice Authorization Form which must be signed by the applicant and returned to us. The cost will be approximately $150.00 to $200.00 which will be billed to you by the newspaper. If authorization is not received by [date, 15 days from the date mailed to applicant] application processing will terminate.

2. A minimum of 30 days will be allowed for public response following the date of the public notice. If no public response is received, or if the public response received can be satisfactorily answered, then the permit may be issued. However, if there is significant public response, then it may be necessary to initiate public hearing procedures. If a public hearing is necessary, you will be so advised.

If you have any questions or comments on the draft permit or public notice requirements, please contact me at [staff phone number].

Sincerely,

RO GW Permit Writer/Supervisor

ATTACHMENT E

1. Application Deficiency Transmittal Letter, Administrative Deficiencies

2. Application Deficiency Transmittal Letter, Technical Deficiencies

Transmittal Letter For Return of The Application
Administrative Deficiencies

DEQ RO Letterhead

Applicant's Address

Dear Applicant:

Thank you for submitting your application for [facility] to withdraw _____ gallons per year. I have reviewed the application for administrative completeness. Correction of the following items is necessary before your application can be processed further:

1.
2.
3.
etc.

If you correct the administrative deficiencies mentioned above, the staff will review your application for technical completeness and continue to process your application. If necessary, the staff will contact you at the completion of the technical review to correct any technical deficiencies.

Please resubmit your corrected application and one copy to this office no later than [10-30 days from the date mailed to the applicant]. If the deficiencies listed above are not addressed by [date], application processing will terminate and you will lose your standing in the review process.

If you have any questions, please contact me at [staff phone number].

Sincerely,

RO GW Permit Writer

Transmittal Letter For Return of The Application
Technical Deficiencies

DEQ RO Letterhead

Applicant's Address

Dear Applicant:

Thank you for submitting your application for [facility] to withdraw _____ gallons per year. I have reviewed the application for technical completeness. Correction of the following items is necessary before your application can be processed further:

1.
2.
3.
etc.

If you correct the technical deficiencies mentioned above, the staff will continue to process your application. Please resubmit your corrected application and one copy to this office no later than [10-30 days from the date mailed to the applicant]. If the deficiencies listed above are not addressed by [date], application processing will terminate and you will lose your standing in the review process.

If you have any questions, please contact me at [staff phone number].

Sincerely,

RO GW Permit Writer

ATTACHMENT F

1. Local Government Transmittal Letter

Local Government Transmittal Letter

DEQ RO Letter Head

Local Government Address

Dear (Executive Officer):

The Department of Environmental Quality has received an application to withdraw ground water in the [Eastern Virginia, Eastern Shore] Ground Water Management Area. 9 VAC 25-610-250 B. of the Ground Water Withdrawal Regulation requires that the DEQ send a notice of each draft permit to each local governing body within the ground water management area where the proposed withdrawal will occur.

In accordance with this section, please find the enclosed notice which will be advertised in the [newspaper name] on [date]. Additional information on the permit application can be obtained by contacting me.

The Department will accept comments concerning the proposed issuance of this draft permit for thirty days. All comments must be received by [time] on [date].

Sincerely,

RO Permit Writer

Enclosure

ATTACHMENT G

1. PUBLIC NOTICE AUTHORIZATION FORM

PUBLIC NOTICE AUTHORIZATION FORM
AUTHORIZATION FOR PUBLIC NOTICE BILLING TO
GROUND WATER WITHDRAWAL PERMIT APPLICANT

I hereby authorize the Virginia Department of Environmental Quality (DEQ), to have the cost of publishing a public notice once in the_____ charged to:
(newspaper)

Agent or Department
to be billed: _____

_____

_____

Applicant's
Address:

_____

_____

_____

Authorizing Agent: _____
(print)

Authorizing Agent's
Signature: _____

Applicant's Phone Number:(___)_____

RETURN TO: DEQ
[TRO/PRO] REGIONAL OFFICE
RO ADDRESS
ATTN: RO CONTACT
(RE: *FACILITY NAME.*)

Effective Date June 1, 1999

ATTACHMENT H

1. Public Notice Format

Public Notice Format

PUBLIC NOTICE

[Applicant's Name] has applied for a ground water withdrawal permit, pursuant to Section 62.1-266 of the Ground Water Management Act of 1992 and the Department of Environmental Quality (DEQ) Ground Water Withdrawal Regulations 9 VAC 25-610-10 et seq., to withdraw [number of gallons] gallons per year with a monthly maximum of [number of gallons] gallons. The annual withdrawal limit equates to an annual daily average of [number of gallons] per day. [For cases where the daily withdrawal may be significantly different than the annual daily average (ex. seasonal withdrawal) add "The nature of the applicants withdrawal may result in daily withdrawals of up to [number] gallons.] The DEQ has made a tentative decision to issue a permit.

The ground water withdrawal will support the following beneficial use: [briefly describe the beneficial use]. The proposed withdrawal will utilize the [aquifer name(s)] located at a depth of [xxxx] feet below land surface.

Any persons wishing to submit comments relative to this permit application must submit comments, filings, protest, request for a public hearing or any other correspondence on the application to the following address: (DEQ RO). Comments shall include the name, address, and telephone number of the writer and shall contain a complete and concise statement of the factual basis for the comments. Only those comments received prior to the end of the 30 day comment period will be considered during the Board's final decision on the permit. The 30 day comment period will end at [time] on [date]. The Director of the Department of Environmental Quality will consider all written comments and requests for an informal hearing. Determination on the necessity of an informal hearing will be made in accordance with 9 VAC 25-230-50 of Procedural Rule No. 1 (9 VAC 25-230-10 et seq.). The Director may dispense with an informal hearing and grant the permit or transmit the application or request to the Board for its decision.

Further information or a copy of the draft permit may be obtained by contacting [RO contact name] at [RO contact phone].

ATTACHMENT I

1. Transmittal Letter To The Newspaper For Publishing the Public Notice

Transmittal Letter To The Newspaper
For Publishing the Public Notice

(Use DEQ-RO Letterhead)

Newspaper Address

Dear :

Please publish the attached legal notice in your paper's classified advertisement section on [date to be published].

Upon completion of the advertising, please send proof of publication to (RO address) and a bill for our services to applicant's address shown on the attached authorization form.

If you have any questions, please contact (RO staff member) at (phone number).

Sincerely,

RO

cc: Applicant

ATTACHMENT J

1. Example Authorization Cover Memo for Public Hearing Request

2. Example Authorization Memo for Public Hearing Request

3. Example Authorization Memo for Public Hearing Request to Deny a Ground Water Withdrawal Application

4. Transmittal Letter Denying a Request for a Public Hearing

5. Transmittal Letter Approving a request for a Public Hearing

Example Authorization Cover Memo
for Public Hearing Request

RO Memohead

To: Regional Director

From: Regional Office Ground Water Permitting Staff
Date:

Copies: OPL Policy Analyst

Subject: Authorization for Public Hearing: GW0000000, [Facility Name], [Owner], [County]

Enclosed is the draft public hearing authorization request package for the proposed [facility name] ground water withdrawal permit application in [County name] County. It is composed of the following items:

1. Briefing memo requesting authorization for the public hearing.
2. Copies of the Public Notice.
3. Copies of comments received from public notice.
4. Copies of [PRO, TRO] responses to comments received from public notice.
5. Draft letter notifying owner/concerned citizens of hearing.
6. Draft Public Notice of Hearing

Example Authorization Memo
for Public Hearing Request

RO Memohead

To: Regional Director

From: Remediation Manager

Date:

Copies: Office of Policy & Legislation, Ground Water Program Manager

Subject: Briefing Memo Requesting Authorization to Convene [Deny] a Public Hearing regarding the Issuance of a Ground Water Withdrawal Permit No. GW0000000, [Facility Name], [Owner],[County]

Background

[Owner Name] submitted a Ground Water Withdrawal Permit Application on [Date]. The application is for a [new, expanded] withdrawal. The application was for [X] gallons per year which will [describe beneficial use]. The draft permit was public noticed on [date] and the public omment period closed on [date]. [Number] responses were received by [PRO, TRO]. A written .equest for a public hearing [was, was not received].

Comment and Response Summary
(Summarize each comment and it's corresponding in numerical order as follows):

1. Comment: Summary
   Response: Summary

2. Comment: Summary
   Response; Summary

Statutory and Regulatory Considerations

Staff have analyzed the comments received with respect to the statutory and regulatory considerations for hearings. Staff has determined that there are [are not] substantial disputed issues relevant to the permit issuance. There are [no] statutory requirements for a hearing. Significant public interest has [has not] been demonstrated. [Describe any persons requesting a hearing in writing, if any, and their reason for requesting a hearing.] The issuance of the permit is not inconsistent with, or in violation of, the Ground Water Management Act of 1992 or any regulation promulgated thereunder.

Staff Recommendation

The staff recommends that the Regional Director:

1. [Approve, Disapprove] the convening of a Public Hearing concerning the [issuance, reissuance] of Ground Water Withdrawal Permit No. GW000000.

APPROVED: _____
Regional Director

DATE: _____

Example Authorization Memo
for Public Hearing Request
to Deny Ground Water Withdrawal Application

RO Memohead

To: Regional Director

From: Remediation Manager

Date:

Copies: Office of Policy & Legislation, Ground Water Program Manager

Subject: Briefing Memo Requesting Authorization to Convene a Public Hearing regarding the Denial of Ground Water Withdrawal Application No. GW0000000, [Facility Name], [Owner],[County]

Background

[Owner Name] submitted a Ground Water Withdrawal Permit Application on [Date]. The application is for a [new, expanded] withdrawal. The application was for [X] gallons per year which would [describe beneficial use]. Staff has evaluated the application and determined that it is not in compliance with criteria contained in Ground Water Withdrawal Regulation (9 VAC 25-610-10 et seq.). Staff has requested the applicant to modify the application to comply with the regulation or to withdraw the application. The applicant has refused to modify or withdraw the application.

Evaluation Summary

Summarize areas of non-compliance with regulations.

Staff Recommendation

The staff recommends that the Regional Director:

1. Approve the convening of a Public Hearing concerning the denial of Ground Water Withdrawal Application No. GW000000.

APPROVED: _____
Regional Director

DATE: _____

Transmittal Letter Denying a Request for a Public Hearing

RO Letterhead

[Date}

Name

Address

Dear [ ]:

This is in reply to your [date] letter requesting a public hearing on the proposed issuance of Ground Water Withdrawal Permit No. GW00XXX00. We have carefully evaluated the issues raised in your letter. We believe that the proposed Ground Water Withdrawal Permit adequately addresses those issues which are within the jurisdiction of the Ground Water Withdrawal Permit Program. Based on the information we received during the public comment period, and in accordance with 9 VAC 25-230-10 et sec, PROCEDURAL RULE NO. 1 - Public and Formal Hearing Procedures, I do not find sufficient justification to conduct a public hearing.

My staff and I sincerely appreciate your interest in this permit.

Sincerely,

Regional Office Director

Transmittal Letter Approving a Request for a Public Hearing

RO Letterhead

[Date}

Name

Address

Dear [ ]:

This is in reply to your [date] letter requesting a public hearing on the proposed issuance of Ground Water Withdrawal Permit No. GW00XXX00. We have carefully evaluated the issues raised in your letter. We believe there are substantial, disputed issues regarding the issuance of this permit which warrants the convening of a public hearing to gather additional information on this action. A public hearing will be scheduled in accordance with 9 VAC 25-230-10 et sec, PROCEDURAL RULE NO. 1 - Public and Formal Hearing Procedures. The public hearing will be held within 60 days from the date of this letter. The time and date of the public hearing will be published in the [newspaper name]. A member of my staff will notify you of the hearing time and date.

My staff and I sincerely appreciate your interest in this permit.

Sincerely,

Regional Office Director

ATTACHMENT K

1. Approval Memorandum/ Staff Recommendation

Approval Memorandum

Subject: Recommendation to Issue Ground Water Withdrawal Permit No. GWXXXXXXX for Facility Name to [Applicant Name]

To: Regional Office Director

From: Remediation Manager

Date:

Copies:

Legal Name & Address:

Application Submitted By:

Application Date:

ɔcation and Purpose of Facility:

Permit Fee Received:

Local Government: (LGOF DATE)

Application Complete: (Date)

Background:

Public Notice:

Staff Comments:

STAFF RECOMMENDATIONS:

The staff recommends that the Regional Director:

1. Approve the subject application and pursuant to Section 62.1-266., authorize the issuance of a permit to (applicant's name) to withdraw a total of (_____) gallons per year of ground water from their well(s). This water must be applied to beneficial use for (describe use) as described in the application dated (_____) and subsequently amended.

2. Direct (applicant) to adhere to conditions of the permit.

APPROVED: _____
Regional Director

DATE: _____

ATTACHMENT L

1. Ground Water Withdrawal Permit Transmittal Letter

Ground Water Withdrawal Permit
Transmittal Letter

[date]
Certified Mail
Return Receipt Requested

Name and Address

Dear:

Pursuant to Title 62.1, Chapter 25, Code of Virginia, 1950, as amended, (The Ground Water Management Act of 1992) the Director has authorized issuance of a permit to utilize ground water. This permit limits the volume of withdrawal to [ ] gallons of ground water per month and [ ] gallons of ground water per year.

The completed permit is enclosed for your records. Please note the requirement to record meter readings each month. Monthly use of ground water shall be reported to the [_____] Regional Office of the Department of Environmental Quality by the tenth (10 th) day of each January, April, July, and October on the attached Ground Water Withdrawal Reporting Form. You are responsible for making additional copies of the form.

As provided by Rule 2A:2 of the Supreme Court of Virginia, you have thirty days from the date of service (the date you actually receive this decision or the date it was mailed to you, whichever occurred first) within which to appeal this decision by filing a notice of appeal in accordance with the Rules of the Supreme Court of Virginia with the Director, Department of Environmental Quality. In the event that this decision is served on you by mail, three days are added to that period. Refer to Part 2A of the Rules of the Supreme Court of Virginia for additional requirements governing appeals from administrative agencies.

Alternatively, any owner under § 62.1-44.16, § 62.1-44.17 and § 62.1-44.19 of the Code of Virginia, aggrieved by an action of the Board taken without a formal hearing, or by inaction of the Board, may demand in writing a formal hearing of such owner's grievance, provided a petition requesting such hearing is filled with the Board. Said petition must meet the requirements set forth in § 1.23(b) of the Board's Procedural Rule No. 1. In cases involving actions of the Board, such petition must be filed within thirty days after notice of such action is mailed to such owner by certified mail.

If you should have any questions, please contact [staff member] of our [ ] Regional Office (xxx) (xxx-xxxx).

Sincerely,

Regional Office Director/Remediation Manager

Enclosure
cc: OGWM

ATTACHMENT L2

1. Modified Ground Water Withdrawal Permit Transmittal Letter

Modified Ground Water Withdrawal Permit
Transmittal Letter

[date]
Certified Mail
Return Receipt Requested

Name and Address

Dear:

Pursuant to Title 62.1, Chapter 25, Code of Virginia, 1950, as amended, (The Ground Water Management Act of 1992) the Director has authorized issuance of a modified permit to utilize ground water. The purpose of this modification is to authorize [explain the nature of the modification]. This permit continues to limit the volume of withdrawal to [ ] gallons of groundwater per month and [ ] gallons of groundwater per year.

The completed permit is enclosed for your records. Please note the requirement to record meter readings each month. Monthly use of ground water shall be reported to the [_____] Regional Office of the Department of Environmental Quality by the tenth (10 th) day of each January, April, July, and October on the attached Ground Water Withdrawal Reporting Form. You are responsible for making additional copies of the form.

As provided by Rule 2A:2 of the Supreme Court of Virginia, you have thirty days from the date of service (the date you actually receive this decision or the date it was mailed to you, whichever occurred first) within which to appeal this decision by filing a notice of appeal in accordance with the Rules of the Supreme Court of Virginia with the Director, Department of Environmental Quality. In the event that this decision is served on you by mail, three days are added to that period. Refer to Part 2A of the Rules of the Supreme Court of Virginia for additional requirements governing appeals from administrative agencies.

Alternatively, any owner under § 62.1-44.16, § 62.1-44.17 and § 62.1-44.19 aggrieved by an action of the Board taken without a formal hearing, or by inaction of the Board, may demand in writing a formal hearing of such owner's grievance, provided a petition requesting such hearing is filled with the Board. Said petition must meet the requirements set forth in § 1.23(b) of the Board's Procedural Rule No. 1. In cases involving actions of the Board, such petition must be filed within thirty days after notice of such action is mailed to such owner by certified mail.

If you should have any questions, please contact [staff member] of our [ ] Regional Office (xxx) (xxx-xxxx).

Sincerely,

Regional Office Director/Remediation Manager

Enclosure
cc: OGWM

ATTACHMENT M

1. Ground Water Withdrawal Permit Form

COMMONWEALTH of VIRGINIA
DEPARTMENT OF ENVIRONMENTAL QUALITY

PERMIT
TO WITHDRAW GROUND WATER
(FOR USE IN GROUND WATER MANAGEMENT AREAS)

Permit Number: _____
Effective Date: _____
Expiration Date: _____

Pursuant to Section 62.1-256 of the Ground Water Management Act of 1992 (Chapter 25, Title 62.1 of the Code of Virginia) and the Ground Water Withdrawal Regulation (9 VAC 25-610-10 et seq.), the STATE WATER CONTROL BOARD hereby authorizes

Permittee _____

Address _____

_____

_____

Facility _____

to withdraw and use ground water in accordance with this permit and the application received [Date] and subsequently amended.

1. permittee is authorized to withdraw _____ gallons per year.

The permittee shall comply with all requirements contained on this cover page, Part I - Permit Standards, Limitations, and Conditions, [Part II - Special Conditions (if special conditions are required)], the Ground Water Management Act of 1992 (Chapter 25, Title 62.1 of the Code of Virginia), and the Ground Water Withdrawal Regulation 9 VAC 25-610-10 et sec. Nothing in this permit or this regulation shall be construed to relieve the permittee of the duty to comply with all applicable Federal and State statutes and regulations.

The permitted withdrawal will [briefly describe the beneficial use]. Other beneficial uses are not authorized by this permit.

Any non-compliance with permit conditions, the Ground Water Withdrawal Regulation 9 VAC 25-610-10 et seq. or the Ground Water Management Act of 1992 (Chapter 25, Title 62.1 of the Code of Virginia) is a violation of the regulation and law, and is grounds for enforcement action, permit termination, revocation, amendment, or denial of a permit renewal application.

By direction of the STATE WATER CONTROL BOARD,
this Permit is granted by:

Signed _____ Date _____
For the STATE WATER CONTROL BOARD

Part I
Permit Standards, Limitations and Conditions

1. The withdrawal of ground water shall originate from the following withdrawal point(s):

Owner Well Name/#	DEQ Well#	Depth	Aquifer	Latitude	Longitude
_____	_____	____	_____	_____	_____
_____	_____	____	_____	_____	_____
_____	_____	____	_____	_____	_____
_____	_____	____	_____	_____	_____

2. Withdrawals from the well or well system are limited as follows:

   In a calendar month: Total pumpage from these (this) wells shall not exceed _____ gallons.

   Other limit specific to permit

3. Water use from each well and total system water use shall be recorded monthly and reported on forms provided by the Department to the [RO] of the Department of Environmental Quality by the tenth day of each January, April, July and October for the respective previous standard quarter. Records of water use shall be maintained by the permittee as required in Section 9 VAC 25-610-130 F. of the Ground Water Withdrawal Regulation.

4. Permitted users shall install in-line totalizing flow meters to read gallons, cubic feet or cubic meters on each permitted well prior to beginning the permitted use. Meters shall be tested in accordance with American Water Works Association (AWWA) Manual M-6, "Water Meters - Selection, Installation, Testing, and Maintenance" Such meters shall produce volume determinations within plus or minus 10% of actual flows. A defective meter or other device must be repaired or replaced within 30 days. A defective meter is not grounds for not reporting withdrawals. During any period when a meter is defective generally accepted engineering methods shall be used to estimate withdrawals and the period during which the meter was defective must be clearly identified in ground water withdrawal reports.

5. Each permitted well shall be equipped in a manner such that water levels can be measured during pumping and nonpumping periods without dismantling any equipment. Any opening for tape measurement of water levels shall have an inside diameter of 0.5 inches and be sealed by a removable plug or cap. The permittee shall provide a tap for taking raw water samples from each permitted well.

6. The permittee shall not place a pump or water intake device lower than the top of the uppermost confined aquifer that a well utilizes as a ground water source or lower than the bottom of an unconfined aquifer that a well utilizes as a ground water source.

7. Each well that is included in this ground water withdrawal permit shall have affixed to the well casing, in a prominent place, a permanent well identification plate that records the Department of Environmental Quality well identification number, the ground water withdrawal permit number, the total depth of the well and the screened intervals in the well, at a minimum. Such well identification plates shall be in a format specified by the Department and are available from the Department of Environmental Quality.

8. The water conservation and management plan as described in the application received [date] and subsequently amended is incorporated into this permit and included as Attachment A. Requirements in the water conservation and management plan shall have the same effect as any condition contained in this permit and may be enforced as such.

9. This permit may be reopened for the purpose of amending the conditions of the permit to meet new regulatory standards duly adopted by the Board.

10. A new permit application must be submitted 270 days before the expiration date of this permit.

11. A new permit application must be submitted 270 days prior to any proposed modification to this permit which will result in an increase of withdrawal above permitted limits or violate the terms and conditions of this permit.

12. This permit may be reopened for amendment, transfer, or revocation as described in Part 6 of the Ground Water Withdrawal Regulation.

13. The permittee must notify the Department in writing and obtain staff approval of any change in the status, construction or pump setting of wells included in this permit. A revised GW-2 form must be submitted to the Department within 30 days in the event that the physical construction of a well is altered or the pump setting in the well is changed.

14. The permittee must notify the Department in writing of any change of contact person, address, or phone number that is contained in the application received [date].

15. Upon presentation of credentials the Board or Department, or any duly authorized agent, shall have the power to enter, at reasonable times and under reasonable circumstances, any establishment or upon any property, public or private, located anywhere in the Commonwealth for the purposes of obtaining information, conducting surveys or inspections, or inspecting wells and springs to ensure compliance with any permits, standards, policies, rules, regulations, rulings and special orders which the Board or Department may adopt, issue or establish to carry out the provisions of the Ground Water Management Act of 1992 and the Ground Water Withdrawal Regulation.

16. **(Optional)** The permittee shall notify the Department five (5) working days in advance of any scheduled well maintenance which results in the pump being pulled for wells which screen locations are unknown. At the time of such notification, the Department may take the opportunity to run geophysical logs to determine screen intervals.

Part II
Special Conditions

(IF APPLICABLE SEE ATTACHED SUGGESTIONS)

1. Withdrawals from individual wells are limited as follows:

Owner Well Name/#	DEQ Well#	Max Pumping Rate (gallons per ___) (day,month,year)	Max Pump Setting (ft)
_____	____	_____	_____
_____	____	_____	_____
_____	____	_____	_____
_____	____	_____	_____

2. **Mitigation Plan**
The Mitigation Plan, as described in the application received (*application date*) and subsequently amended, is incorporated into this permit and included as Attachment B. Requirements in the Mitigation Plan and subsequent revisions shall have the same effect as any condition contained in this permit and may be enforced as such.

3. **WWOP**
Daily withdrawals shall be consistent with the requirements and conditions of the Virginia Department of Health Waterworks Operation Permit (permit #). Copies of WWOP and the associated Engineering Description Sheets shall be submitted to DEQ within 30 days of an upgrade.

The following special conditions MAY be included at the discretion of the permit writer. Additional special conditions may be included at the discretion of the permit writer.

4. **Additional Wells**
A minor amendment to this permit may be made to include additional wells if the total withdrawal does not exceed the permitted amount contained in this permit, the withdrawal from all additional wells originates from the (*aquifer name*) Aquifer, and the location of the wells are approved by DEQ staff prior to construction.

Additionally, a complete suite of geophysical logs (Spontaneous Potential, Single Point Resistance, 16/64 Short and Long Normal, Natural Gamma) shall be submitted to the DEQ Tidewater Regional Office prior to setting the pump intake.

5. **Drilling Schedule Notification**
At least two weeks prior to the scheduled construction of (*owner well name, DEQ well #*), the permittee shall notify the (TRO, PRO) Regional Office of the Department of Environmental Quality of the drilling timetable and receive prior approval of the well locations. Completed water well construction reports shall be submitted to DEQ within 30 days of the completion of any well and prior to the initiation of any withdrawal from the well. Additionally, geophysical logs (Spontaneous Potential, Single Point Resistance, 16/64 Short and Long Normal, Natural Gamma) shall be completed for the well and submitted with the corresponding completion report.

6. **Geophysical Logs**
The permittee shall collect geophysical logs (Spontaneous Potential, Single Point Resistance, 16/64 Short and Long Normal, Natural Gamma) and prepare geologist's logs from the drill cuttings for all proposed production wells. The permittee shall evaluate this information to estimate the top of the (*aquifer name*) Aquifer, and therefore, a depth below which pumps may not be set. The permittee's determination of the top of the (*aquifer name*) aquifer shall be submitted for review and Department concurrence prior to installation of any pump. All geophysical and geologist's logs shall be referenced by the DEQ well number.

7. **WWCR** (FORM GW-2)
The permittee shall provide complete Water Well Construction Reports (Form GW-2) to DEQ staff for all production and monitoring wells within 30 days of the completion of the well.

8. **Water Quality Monitoring**
The permittee shall collect a ground water quality sample from (*owner well name, DEQ well #*) completed in the (*aquifer name*) Aquifer on a quarterly basis. Prior to collecting the sample, the well shall be pumped sufficiently to withdraw at least three well volumes and the Ph, temperature, and conductivity of the discharge shall be stabilized. The sample shall be analyzed for chloride, sulfate, alkalinity, fluoride, calcium, magnesium, sodium, iron, and potassium content, and a mass balance shall be performed on the results. A report of the results shall be submitted quarterly with the withdrawal reports required in Condition 3 of Part I - Permit Standards, Limitations and Conditions. Records of ground water quality sampling results shall be maintained by the permittee as required in 9 VAC 25-610-130.F. of the Ground Water Withdrawal Regulation. If no trends in chloride concentration are shown after the collection of 10 quarterly samples, sampling frequency may be reduced to an annual basis at the request of the permittee with approval by DEQ staff.

9. **Water Quality Reopener**

If the monitoring information required in Condition (*paragraph number*), above, indicates the potential for adverse impacts on ground water quality due to this withdrawal, this permit may be reopened to include ground water quality action levels.

10. **Water Level Monitoring**

(*Within [time frame] of the effective date of the permit*), a continuous water level recording instrument shall be installed and maintained on the monitoring well (*owner well name, DEQ well #*). Daily low water level records shall be submitted quarterly with the withdrawal reports required in Condition 3 of Part I - Permit Standards, Limitations and Conditions. Records of ground water levels shall be maintained by the permittee as required in 9 VAC 25-610-130.F. of the Ground Water Withdrawal Regulation.

11. **Water Level Reopener**

If the monitoring information required in Conditions (*paragraph number*), above, indicates the potential for adverse impacts on ground water level due to this withdrawal, this permit may be reopened to include ground water level action levels.

12. **Pump Intake Settings (existing wells)**

Pump settings in individual wells are limited as follows:

Owner Well Name/#	DEQ Well#	Max Pump Setting (ft below land surface)
Well name		# # # - # # #
##'		

The permittee may provide additional information regarding the depth of the top of the (*aquifer name*) Aquifer to justify pump settings different than those listed above. Any change in the pump settings must receive prior approval by staff of the Department of Environmental Quality and be included in this permit as a minor amendment.

13. **Pump Intake Settings (proposed wells)**

Prior to any withdrawals from the proposed production wells, the permittee shall consult with DEQ in order to determine the maximum depth of the pump intake for each well.

14. **Pump Intake Reset**

(*No later than five years from the effective date of this permit*), or at the time of any modification to (*owner well name, DEQ #*), whichever comes first, the permittee shall raise the pump intake to no lower than (___) feet below the land surface. The permittee shall advise, in writing, DEQ of the new pump setting within 30 days of the modification.

15. **Well Abandonment**

Within 90 days of the effective date of the permit, the permittee shall properly abandon the unused (*owner well name, DEQ well #*) in accordance with the Virginia Department of Health's Private Well *(or Waterworks)* Regulations and submit documentation to the Department of Environmental Quality. At least one week prior to permanently

abandoning the well, the permittee shall notify the Department of Environmental Quality of the scheduled well abandonment date.

16. **Annual Irrigation Report**

The permittee will submit, by January 10 of each year, an Annual Irrigation Water Use Report for the preceding year to the (Tidewater, Piedmont) Regional Office of the Department of Environmental Quality. The report shall be submitted with the withdrawal reports required in Condition 3 of Part I - Permit Standards, Limitations and Conditions. Records of the Annual Irrigation Water Use Report shall be maintained by the permittee as required in Section 9 VAC 25-610-130.F of the Ground Water Withdrawal Regulation. This report should address the total irrigation water (surface and ground water) usage, for each month and the complete year. The items to be included in the report are: total irrigation demand (combined surface and ground water sources metered from the irrigation lake); irrigation demand (ground water) from the production wells; and resultant surface water contribution. Should this report indicate that more irrigation water is available from the surface water sources than was assumed in the application received (*application date*), and subsequently amended, the permit may be reopened to reduce the annual withdrawal amount authorized.

17. **Irrigation Lake Flow Meter**

The permittee shall install an in-line totalizing flow meter to read gallons, cubic feet or cubic meters on the irrigation lake's withdrawal prior to beginning the permitted use. This meter should be capable of totalizing all water applied to the golf course for irrigation purposes. The meter shall produce volume determinations within plus or minus 10% of actual flows. A defective meter or other device must be repaired or replaced within 30 days. A defective meter is not grounds for not reporting withdrawals. During any period when a meter is defective generally accepted engineering methods shall be used to estimate withdrawals and the period during which the meter was defective must be clearly identified in ground water withdrawal reports.

18. **Withdrawal System Growth**

This permit recognizes that the permittee anticipates using (____) percent of the permitted withdrawal amount of (_____) gallons per year by the 5th year of the permit.

19. **Permit Reopener**

This permit may be reopened if the issuance of ground water withdrawal permits required by the Ground Water Management Act of 1992 for existing permitted or certificated users indicate that the basis used for predicting compliance with regulatory drawdown criteria was inaccurate.

999 **Wildcard**

(build your own special condition)

ATTACHMENT N

1. Letter to Applicant Not in Compliance with Issuance Criteria Recommending Denial of a Ground Water Withdrawal Permit

2. Letter to Applicant Unwilling to Accept Draft Permit Recommending Denial of a Ground Water Withdrawal Permit

3. Letter to Applicant for Denial of Application

Letter to Applicant Not in Compliance with Issuance Criteria
Recommending Denial of a Ground Water Withdrawal Permit

Certified Mail
Return Receipt Requested

Date

Owner's Address

Dear Owner:

My staff has reviewed your application to withdraw [requested amount] of ground water that was submitted on [date]. On [date] my staff transmitted a letter to you indicating technical deficiencies with your application. [Describe any response to technical deficiency letter] Your application does not comply with criteria contained in the Ground Water Management Act of 1992 and the Ground Water Withdrawal Regulation (9 VAC 25-610-10 et seq.) required for the issuance of ground water withdrawal permits. The specific areas of non-compliance are:

1. (list areas of non-compliance with section D. of this document,
Ground Water Withdrawal Regulations, or the Ground Water Management Act of 1992)
2.
3.
4.
etc.

At this time you may modify your application to obtain compliance with criteria for ground water withdrawal permit issuance, withdraw your existing application, or proceed with your existing application. Should you elect to proceed with your existing application I will recommend denial of the application for the reasons listed above.

If you wish to modify your existing application to obtain compliance with statutory and regulatory permit issuance criteria or withdraw your application please contact [staff member] in writing by [date]. If no response is received by [date], I will direct my staff to begin the process to deny your application.

If you have any questions, please contact (staff member and phone number).

Sincerely,

Regional Office Director

Effective Date June 1, 1999

Letter to Applicant Unwilling to Accept Draft Permit
Recommending Denial of a Ground Water Withdrawal Permit

Certified Mail
Return Receipt Requested

Date

Owner's Address

Dear Owner:

My staff mailed a draft ground water withdrawal permit, public notice, and public notice authorization form to you on [date]. My staff contacted you on [date] by telephone because you failed to return the signed public notice authorization form in a timely manner. It is my understanding that you are unwilling to accept the draft permit, including all terms and conditions.

If you are unwilling to accept the draft permit I will recommend denial of your application. If you wish to accept the draft permit please complete the public notice authorization form and mail it to [staff member] by [date]. If no response is received by [date], I will direct my staff to begin the process to deny your application.

If you have any questions, please contact (staff member and phone number).

Sincerely,

Regional Office Director

Effective Date June 1, 1999

Letter to Applicant for Denial of Application

Date

Certified Mail
Return Receipt Requested

Owner's Address

Dear Owner:

On [date of Board meeting] the State Water Control Board denied the issuance of a Ground Water Withdrawal Permit that you requested in an application dated [date]. The Board's decision to deny issuance of a Ground Water Withdrawal Permit was based on the following reason(s):

1. [List reason for denial]
2.
3.
4.
etc.

As provided by Rule 2A:2 of the Supreme Court of Virginia, you have thirty days from the date of service (the date you actually receive this decision or the date it was mailed to you, whichever occurred first) within which to appeal this decision by filing a notice of appeal in accordance with the Rules of the Supreme Court of Virginia with the Director, Department of Environmental Quality. In the event that this decision is served on you by mail, three days are added to that period. Refer to Part 2A of the Rules of the Supreme Court of Virginia for additional requirements governing appeals from administrative agencies.

Alternatively, any owner under § 62.1-44.16, § 62.1-44.17 and § 62.1-44.19 aggrieved by an action of the Board taken without a formal hearing, or by inaction of the Board, may demand in writing a formal hearing of such owner's grievance, provided a petition requesting such hearing is filed with the Board. Said petition must meet the requirements set forth in 9 VAC 25-230-130 of the Board's Procedural Rule No. 1. In cases involving actions of the Board, such petition must be filed within thirty days after notice of such action is mailed to such owner by certified mail.

If you should have any questions, please contact [staff member] of our [ ] Regional Office (xxx-xxxx).

Sincerely,

Regional Office Director

Effective Date June 1, 1999

ATTACHMENT O

1. Water Well Completion Report (Form GW-2)

Effective Date June 1, 1999

Form GW-2

Revised 6/1/99

COMMONWEALTH OF VIRGINIA
WATER WELL COMPLETION REPORT

DEQ Well No. _____

(Certification of Completion/County Permit)

\ ept. Of Environmental Quality
P.O. Box 10009
Richmond, VA 23240-0009

SWCB Permit _____
County Permit _____

Certification of inspecting official:
This well does _____ does not _____
meet code/low requirements.
S. _____
Date _____

For Office Use

County/City _____

County/City Stamp

- Virginia Plane Coordinates
  _____ N
  _____ E
- Latitude & Longitude
  _____ N
  _____ W
- Topo. Map No. _____
- Elevation _____ ft.
- Formation _____
- Lithology _____
- River Basin _____
- Province _____
- Type Logs _____
- Cuttings _____
- Water Analysis _____
- Aquifer Test _____

- Owner _____
- Well Designation or Number _____
  Address _____
  _____
  Phone _____
- Drilling Contractor _____
  Address _____
  _____
  Phone _____

Tax Map I.D. No. _____
Subdivision _____
Section _____
Block _____
Lot _____
Class Well: I _____, IIA _____
IIB _____, IIIA _____, IIIB _____
IIIC _____ IIID _____ IIIE _____

WELL LOCATION: _____ (feet/miles _____ direction) of _____
and _____ feet/miles _____ (direction) of _____
(If possible please include map showing location marked)

Date started _____ • Date completed _____ Type rig _____

1. WELL DATA: New ____ Reworked _____ Deepened _____
- T al depth _____ ft.
  h to bedrock _____ ft.
- Hole size (Also include reamed zones)
  - _____ inches from _____ to _____ ft.
  - _____ inches from _____ to _____ ft.
  - _____ inches from _____ to _____ ft.
- Casing size (I.D.) and material
  - _____ inches from _____ to _____ ft.
    Material _____
    Wt. per foot _____ or wall thickness _____ in.
  - _____ inches from _____ to _____ ft.
    Material _____
    Wt. per foot _____ or wall thickness _____ in.
  - _____ inches from _____ to _____ ft.
    Material _____
    Wt. per foot _____ or wall thickness _____ in.
- Screen size and mesh for each zone (where applicable)
  - _____ inches from _____ to _____ ft.
    - Mesh size _____ Type _____
  - _____ inches from _____ to _____ ft.
    - Mesh size _____ Type _____
  - _____ inches from _____ to _____ ft.
    - Mesh size _____ Type _____
  - _____ inches from _____ to _____ ft.
    - Mesh size _____ Type _____
- Gravel pack
  - From _____ to _____ ft.
  - om _____ to _____ ft.
- Grout
  - From _____ to _____ ft., Type _____
  - From _____ to _____ ft., Type _____

2. WATER DATA
- Water temperature _____ °F
- Static water level (unpumped level-measured) _____ ft.
- Stabilized measured pumping water level _____ ft.
- Stabilized yield _____ gpm after _____ hours
  Natural Flow: Yes _____ No _____, flow rate. _____ gpm
  Comment on quality _____

3. WATER ZONES: From _____ To _____
From _____ To _____, From _____ To _____
From _____ To _____, From _____ To _____

4. USE DATA:
Type of use: Drinking _____, Livestock Watering _____
Irrigation _____ Food processing _____, Household _____
Manufacturing _____, Fire safety _____, Cleaning _____
Recreation _____, Aesthetic _____, Cooling or heating _____
Injection _____, Other _____
- Type of facility: Domestic _____, Public water supply _____
  Public institution _____ Farm _____, Industry _____
  Commercial _____, Other _____

5. PUMP DATA: Type _____ • Rated H.P. _____
- Intake depth _____ • Capacity _____ at _____ head

6. WELLHEAD: Type well seal _____
Pressure tank _____ gal, Loc. _____
Sample tap _____, Measurement port _____
Well vent _____, Pressure relief valve _____
Gate valve _____, Check valve (when required) _____
Electrical disconnect switch on power supply _____

7. DISINFECTION: Well disinfected _____ yes _____ no
Date _____, Disinfectant used _____
Amount _____, Hours used _____

8. ABANDONMENT (where applicable) • yes _____ no _____
Casing pulled yes _____ no _____ not applicable _____
Plugging grout From _____ to _____ material _____

OVER

Owner _____ DEQ Well No. _____

9. State law requires submitting to the Virginia State Water Control Board information about groundwater and wells for every well made in the State intended for water, or any other non-exempt well. This information must be submitted whether the well is completed, on standby, or abandoned. Information required includes: an accurately and completely prepared water well completion report, full data from any aquifer pumping tests, drill cuttings taken at ten foot intervals (unless exemption is secured), the results of any chemical analyses, and copies of any geophysical logs. Quarterly-pumpage and use reports are required from owners of public supply and industrial wells. County or State permits to drill may be required in some parts of the state. Some counties require submission of a water well completion report. The Virginia State Health Department requires a water well completion report for public supply wells.

10. DRILLERS LOG (use additional Sheets if necessary)				11.	12. DIAGRAM OF WELL CONSTRUCTION (with dimensions)
DEPTH (feet)		TYPE OF ROCK OR SOIL	REMARKS	Drilling Time (Min.)	
From	To	(color, material, fossils, hardness, etc.)	(water, caving, cavities, broken, core, shot, (etc.)		

13. Well lot dedicated? _____; Size _____ ft. X _____ ft.; Well house? _____
Distance to nearest pollutant source _____ ft., Type _____
Distance to nearest property line _____ ft., Building _____ ft.

14. WATER SERVICE PIPE: Checked under _____ p.s.i. for _____ minutes. Pipe size _____ inches, Material _____
Installer _____
Date _____

15. I certify that the information contained herein is true and correct and that this well and/or system has been installed and constructed in accordance with the requirements for well construction as specified in compliance with appropriate county or independent city ordinances and the laws and rules of the Commonwealth of Virginia.

Signature _____ (Seal). Date _____
(Well driller or authorized person)
License No. _____

ATTACHMENT P

1. Ground Water Withdrawal Reporting Form

Effective Date June 1, 1999

COMMONWEALTH OF VIRGINA
DEPARTMENT OF ENVIRONMENTAL QUALITY

Quarter 1 2 3
Page __ of 3

Quarterly Ground Water Withdrawal Report

ne of Facility _____

Owner _____
Address _____
_____
County/City _____

Name of Operator _____
Position/Title _____
Signature _____ Date _____
Phone _____
Permit # _____

Meter readings are in _____ (gallons, 100's or 1000's of gallons, cubic feet, etc.)

Month of _____ Year_____

Owner Well Number	DEQ Well Number	Present Reading	Previous Reading	Total Gallons	Static Level	Pumping Level

Total Gallons (this month)

Total Gallons Year to Date

Owner Well Number	DEQ Well Number	Date	depth to water from measuring point	stick up (height of measuring point above land surface)	elevation of land surface at well	elevation of static water level at well
			depth -	S. U. -	elev X (-1) =	elev. of s.w.l.
Plant monitoring well						
Housing monitoring well						

ATTACHMENT Q

1. Procedural Rule No. 1

Effective Date June 1, 1999

COMMONWEALTH OF VIRGINIA
STATE WATER CONTROL BOARD

9 VAC 25-230-10 et seq. - PROCEDURAL RULE NO. 1 - PUBLIC AND FORMAL HEARING PROCEDURES

[Adopted: March 25, 1980 - Effective: June 10, 1980.]

9 VAC 25-230-10 Purpose.

The following rules set forth the administrative procedures for informal hearings, which these rules call "public" hearings, and formal hearings. These hearings may be convened for divers purposes, including the issuance, denial, modification or revocation of National Pollutant Discharge Elimination System (NPDES) permits and other certificates issued by the State Water Control Board (Board) pursuant to §§ 62.1-44.15(5), 62.1-44.16, 62.1-44.17, 62.1-44.18:2 and 62.1-44.19 of the Code of Virginia (1950), as amended. These rules do not supplant, revoke or amend any provisions of the State Water Control Law, the State Water Control Board's Regulation No. 6 (NPDES permits), the Board's procedures for the issuance, modification or revocation of State no-discharge certificates (Procedural Rule No. 3, also called "Rule No. 3"). Rather these provisions supplement the Law, Regulation No. 6 and Procedural Rules Nos. 2 and 3 by coordinating the requirements for administrative hearings contained therein with the general administrative hearing procedures contemplated by the Administrative Process Act [§§ 9-6.14:1 and following of the Code]. These rules are adopted under § 62.1-44.15(7) of the Code.

9 VAC 25-230-20 Definitions.

For the purpose of this Rule No. 1, the definitions contained in § 6.3 of Regulation No. 6 and in § 62.1-44.3 of the Code of Virginia apply. In addition, the following terms shall have the following meanings:

(a) "Permit" means any NPDES permit, State No-Discharge certificate, or other permit or certificate issued by the Board pursuant to §§ 62.1-44.15(5), 62.1-44.16, 62.1-44.17, 62.1-44.18:2 or 62.1-44.19, and includes certifications pursuant to 33 U.S.C. § 1341, or subsequent enactments or amendments of any of the foregoing.

(b) "Executive Secretary" means the Executive Secretary of the Board or his designee.

(c) "Subordinate" means (i) one or more, but less than a quorum, of the members of the Board, (ii) one or more employees or members of the staff of the Board, or (iii) any other person or persons designated by the Board to act in its behalf.

(d) "Law" and "Water Control Law" mean the Virginia State Water Control Law as found in Chapter 3.1 of Title 62.1 of the Code of Virginia (1950), as amended.

9 VAC 25-230-30 Public Hearings.

A public hearing is an informal fact-finding proceeding, under 9-6.14:11 of the Code and the Water Control Law and this Rule, held to afford interested persons an opportunity to submit factual data, argument and proof to the Board.

9 VAC 25-230-40 Requests for Public Hearing.

(a) Following the initial publication of notice, pursuant to § 6.32 or § 6.72 of Regulation No. 6, § 2.06 of Procedural Rule No. 2, or § 3.06 of Procedural Rule No. 3, of the application for or tentative determination by the Board to issue or deny a permit, or to modify or revoke an existing permit, the Executive Secretary will receive written requests for a public hearing to reconsider or contest such application or tentative determination and, if applicable, the terms and conditions thereof. The applicant or permittee or any person may submit such a request within the period provided by § 2.06 of Rule No. 2, § 3.07 of Rule No. 3, or § 6.36 of Regulation No. 6.

(b) Requests for a public hearing shall contain the following information:

(1) The name, mailing address and telephone number of the requester;

(2) The names and addresses of all persons for whom the requester is acting as a representative (for the purposes of this requirement, an unincorporated association is a person);

(3) The reason why a hearing is requested:

(4) A brief, informal statement setting forth the factual nature and the extent of the interest of the requester or of the persons for whom the requester is acting as representative in the application or tentative determination, including an explanation of how and to what extent such interest would be directly and adversely affected by the issuance, denial, modification or revocation of the permit in question; and

(5) Where possible, specific references to the terms and conditions of the permit in question, together with suggested revisions and alterations of those terms and conditions which the requester considers are needed to conform the permit to the intent and provisions of the Water Control Law.

9 VAC 25-230-50 Disposition of Requests for Public Hearing.

(a) The Executive Secretary shall review all timely requests for public hearing filed in accordance with the provisions of § 1.11, and within 30 calendar days following the expiration of the time period for the submission of requests shall grant a public hearing if he finds the following:

(1) That there is a significant public interest in the issuance, denial, modification or revocation of the permit in question, and

(2) That there are substantial, disputed issues relevant to the issuance, denial, modification or revocation of the permit in questions, and

(3) That the action requested is not on its face inconsistent with, or in violation of, the Water Control Law, federal law or any regulation promulgated thereunder; or

(4) That a public hearing is required by statute.

(b) The Executive Secretary shall, forthwith, notify by mail at his last known address (1) each requester and (11) the applicant or permittee of his decision to convene or deny a public hearing.

(c) If the Executive Secretary determines to hold a public hearing, he shall schedule the hearing at a time between 30 and 60 days after mailing of the notice required by § 1.12(b).

(d) The Executive Secretary shall cause notice of a public hearing under Regulation 6 to be published as required by § 6.37. The Executive Secretary shall cause notice of any public hearing under Rule No. 2 or Rule No. 3 to be published as follows:

(1) A notice of the hearing shall be published once, in a newspaper of general circulation in the city or county where the facility or operation that is the subject of the permit or permit application is located, at least 30 days before the hearing date.

(2) The notices mailed under § 1.12(b) and published under § 1.12(d)(1) shall contain the information specified in § 2.06 or § 3.06, as appropriate, except that in the description of procedures for final determinations, the procedures for requesting a public hearing shall be replaced by a brief statement of the public hearing procedures and the issues upon which comment will be received.

(e) In matters not related to the issuance, denial, modification, or revocation of a permit, the Executive Secretary may schedule public hearing upon his own motion in any location and upon any notice permitted by law.

9 VAC 25-230-60 Rights of Parties to Public Hearing.

(a) The applicant or permittee shall be a party to the public hearing. All other persons who desire to submit written or oral factual data argument or proofs may do so, subject to the terms of the hearing notice and the applicable provisions of this section.

(b) For the purposes of the public hearing, parties have those rights enumerated in § 9-6.14:11 of the Code.

(c) Oral cross-examination will not be permitted; but any person may submit written questions to the hearing officer, who, subject to his ruling as to their relevance and propriety, will propound them to the witness.

9 VAC 25-230-70 When Public Hearings May Be Dispensed With; Continuances.

(a) Where no person other than the applicant or permittee has submitted a request that makes the showing required by § 1.12(a), and where no hearing is required by statute, the Executive Secretary, on his own motion or on the motion of the applicant or permittee, may dispense with the public hearing.

(b) The Executive Secretary, may, on his own motion or at the request of a party, for good cause shown, reschedule the date of the public hearing. In the event the Executive Secretary reschedules the date for the public hearing after notice has been published, he shall cause the public notice to be republished to reflect the new date of the public hearing.

9 VAC 25-230-80 Public Hearing Procedures.

(a) Public hearings held pursuant to these procedures may be conducted by the full Board at a regular or special meeting of that body, and the Chairman or his designated Subordinate shall preside a Hearing Officer. Hearings may be held before less than the full Board, but shall be conducted by at least one Board Member designated by the Chairman. The Board Member conducting such hearing may preside as Hearing Officer or may designate a Subordinate as Hearing Officer.

The venue for public hearings is prescribed by § 9-6.14:5, except that venue for hearings for revocation or amendment of a certificate is governed by § 62.1-44.26.

(b) The Hearing Officer shall have the authority to maintain order, preserve the impartiality of the decision process, and conclude the hearing process expeditiously. He shall hold all powers necessary to those ends, including, but not limited to, the power to do the following:

(1) Prescribe the methods and procedures to be used in the presentation of factual data, arguments and proof orally and in writing including the imposition of reasonable limitations on the time permitted for oral testimony;

(2) Consolidate the presentation of factual data, arguments and proof to avoid repetitive presentation thereof;

(3) Require that the testimony of any person be given under oath or affirmation;

(4) Rule on procedural matters;

(5) Act as custodian of the record of the hearing causing all notices and written submittals to be entered therein; and

(6) Issue subpoenas and subpoenas duces tecum in accordance with §§ 9-6.14:13 and 62.1-44.26 of the Code.

(c) A verbatim transcript of the public hearing shall be made by a Court Reporter. The record shall include the transcript along with all written testimony, arguments, exhibits, reports, studies, and documents or written material of any kind submitted by any party or any person. A copy of the record shall be maintained for public inspection at the Board's headquarters in Richmond. (d) The Hearing Officer may keep the public hearing record open for the submittal of additional factual data, arguments and proofs for a period not to exceed 30 days following the conclusion of the hearing. Where the hearing is before the Board, the Board may close the record and proceed immediately to a decision. After the close of the hearing record, but before its decision, the Board may, for good cause shown, reopen the hearing record to receive additional evidence in such manner and form as the Board may prescribe.

(e) When the hearing is not conducted before the full Board, the staff shall, promptly after the close of the public hearing record, make a report to the Board.

9 VAC 25-230-90 Decision of the Board Following Public Hearing.

After the close of the informal hearing, the Board shall make a final decision to issue, deny, modify or revoke the permit in question or take or not take any other action proposed. In making its decision the Board shall consider the entire record of the proceeding, and any staff report. The decision of the Board rendered after a public hearing must be reduced to writing and contain a statement of the basis upon which the decision was reached. Copies of the decision, certified by the Executive Secretary, shall be mailed by certified mail to all parties to the hearing.

9 VAC 25-230-100 Formal Hearings.

A formal hearing is a public proceeding for the taking of evidence, held under § 9-6.14:12 of the law, and under this Rule. A formal hearing may be held to consider appeals from certain actions of the Board or the Executive Secretary taken without a formal hearing, as provided by § 62.1-44.25 of the Code, and may also be held for other purposes, and must be held prior to the issuance of a special order under § 62.1-44.15(8), unless the owner consents to the issuance of a special order without a hearing.

9 VAC 25-230-110 Burden of Proof in Formal Hearing.

Each party that has filed a petition for a formal hearing or to become a party shall bear the burden of going forward on the issues of fact and shall bear the burden of ultimate persuasion on all issues set forth in its petition.

9 VAC 25-230-120 Parties; Rights of Parties.

(a) Parties to the hearing shall be the applicant or permittee or the proposed recipient of a special order and those persons who, in the opinion of the Executive Secretary, have filed a petition meeting the requirements of § 1.23(c) or § 1.24(a) of this Rule, except that the only party to a special order hearing shall be the proposed recipient of the special order. The Executive Secretary shall notify all parties of the names and addresses of the parties to the hearing.

(b) The rights of parties to the hearing are enumerated in § 9-6.14:12 of the Code.

9 VAC 25-230-130 Petition for Formal Hearing.

(a) The applicant or permittee or any person aggrieved by any action or inaction of the Board or Executive Secretary with respect to a permit or arising out of the public hearing procedures outlined above may petition the Executive Secretary for the convening of a formal hearing as described in § 1.20 and following. If filed by an aggrieved owner under § 62.1-44.25 of the Code, the petition must be filed within 30 days of the mailing of notice of the action appealed from to that owner by certified mail; otherwise the petition must be filed within 30 calendar days of the action appealed from. The Executive Secretary shall acknowledge in writing the receipt of all petitions for formal hearing.

(b) The petition shall contain the following:

(1) The names and addresses of the petitioner, the petitioner's counsel (if any) and all persons for whom the petitioner is acting as a representative (for the purposes of this requirement, an unincorporated association is a person);

(2) A statement of the action appealed from;

(3) A statement setting forth the interest of the petitioner and explaining how and to what extent the action appealed from will directly and adversely affect such interest;

(4) A statement setting forth the errors alleged in the Board's action and the reasons why such action is deemed contrary to law;

(5) A statement by the petitioner that, should its petition be granted and a hearing held pursuant thereto, the petitioner and all persons represented by the petitioner in connection with the appeal will be available, without cost to any other party, to appear at such hearing;

(6) A statement setting forth the specific relief requested.

(c) The Executive Secretary shall consider all petitions filed in accordance with § 1.23, and shall authorize the convening of a formal hearing if he finds that:

(1) A petition meeting the requirements of § 1.23(b) has been filed by the applicant or permittee or any owner having the right to demand a hearing under § 62.1-44.25; or

(2) A petition meeting the requirements of § 1.23(b) has been filed by a person other than the applicant or permittee, and the petition raises genuine and substantial issues of law or fact which, if resolved adversely to the petitioner, would result in an injury to an interest of the petitioner. The Executive Secretary also may authorize a formal hearing on his own motion.

(d) The Executive Secretary shall notify the applicant or permittee, all other petitioners, and all persons who presented testimony or views at the public hearing by mail of his decision to

authorize or deny a hearing. Should a hearing be authorized, he shall at the same time notify the applicant or permittee and all petitioners for a formal hearing of the date and place of the hearing and advise them of the assertions of fact and law made by the petitioners. The hearing shall be scheduled to be held not less than 30, nor more than 60 days from the date of such notice. When the Executive Secretary authorizes a hearing on his own motion, he shall give at least 30 days' notice by certified mail to the affected applicant, permittee or proposed recipient of a special order. Except for special order hearings, the Executive Secretary shall further give notice by newspaper publication.

(e) The Executive Secretary may at the request of the applicant, permittee, or any party reschedule the date for the formal hearing. The Executive Secretary will promptly notify all parties of any rescheduled hearing date.

9 VAC 25-230-140 Petition to Become a Party to a Formal Hearing.

(a) Any person may, at any time after a petition for formal hearing has been filed or the Executive Secretary has authorized a formal hearing on his own motion, but not more than 15 days after mailing or publication of notice, whichever is later, of the Executive Secretary's decision to authorize a formal hearing, petition the Executive Secretary to become a party to the formal hearing. The Executive Secretary shall acknowledge in writing the receipt of all petitions to become a party. A petition for a hearing filed in accordance with § 1.23 shall also be deemed a petition to be a party to any hearing that may be authorized in accordance with such petition.

(1) The petition to become a party shall contain the following:

(A) The names and addresses of the petitioner, the petitioner's counsel (if any) and all persons for whom the petitioner is acting as a representative.

(B) A statement setting forth the interest of the petitioner in the matter;

(C) A statement by the petitioner that, should its petition be granted, the petitioner and all persons represented by the petitioner in connection with the hearing will be available, without cost to any other party, to appear at the hearing;

(D) A statement setting forth the position of the petitioner with respect to any errors alleged in the petition for hearing; and

(E) A statement setting forth any cross-errors alleged in the Board's action.

(2) The Executive Secretary shall consider all petitions filed in accordance herewith, and shall grant those petitions that both:

(A) Meet the requirements of subsection 1 above, and;

(B) Raise one or more genuine and substantial issues in the petition for hearing, or cite one or more issues in the hearing notice, which, if resolved adversely to the petitioner, would result in an injury to an interest of the petitioner.

(3) The Executive Secretary shall notify the applicant or permittee, and all other parties by mail of his decision to grant or deny a petition to become a party.

9 VAC 25-230-150 Formal Hearing Procedures.

(a) A formal hearing held under this rule may be conducted by the full Board at any regular or special meeting of the body, and the Chairman or his designated subordinate shall preside as Hearing Officer. Hearings may be held at any other time and place authorized by the Board or its Chairman, and shall be conducted by at least one Board member designated by the

Chairman. The Board member conducting such hearing may preside as Hearing Officer or may designate a subordinate as Hearing Officer.

(b) The Hearing Officer shall have the authority to maintain order, preserve the impartiality of the decision process, and conclude the hearing process expeditiously. He shall hold all powers necessary to those ends, including, but not limited to, the power to do the following:

(1) Prescribe the methods and procedures to be used in the development of evidentiary facts and the presentation of evidence by the parties, including the issuance of pre-hearing orders setting forth the issues for hearing and establishing deadlines for the filing of written testimony and exhibits;

(2) Administer oaths and affirmations;

(3) Receive probative evidence, rule upon offers of proof and, upon his own motion or the objection of any party, exclude irrelevant, immaterial, insubstantial or repetitive proofs, rebuttal or cross-examination;

(4) Examine witnesses;

(5) Hold pre-hearing conferences for the settlement, simplification or stipulation of issues and facts by consent';

(6) Rule on procedural matters; and

(7) Issue subpoenas and subpoenas duces tecum in accordance with §§ 62.1-44.26 and 9-6.14:13 of the Code.

(c) Rulings of the Hearing Officer on the admissibility of evidence or testimony, the propriety or conduct of cross-examination, and on any and all procedural matters shall appear in the hearing record and shall control further proceedings in the hearing. Parties shall be presumed to have taken exception to any adverse ruling, and no objection shall be considered waived by further participation in the hearing.

9 VAC 25-230-160 Evidence at Formal Hearing.

(a) Parties may present direct and rebuttal evidence in written and oral form, and may conduct such cross-examination as necessary to elicit a full and fair disclosure of the facts. The Hearing Officer may direct that written evidence be orally summarized, but written testimony should not otherwise be read aloud except under extraordinary circumstances as determined by the Hearing Officer. The Hearing Officer may also prescribe reasonable time limits for the presentation of oral testimony.

(b) The Hearing Officer shall admit all relevant, competent and material evidence offered by the parties but shall exclude evidence which he determines to be repetitive, irrelevant, immaterial or otherwise inadmissible under § 62.1-44.27 of the Code. The Hearing Officer, for good cause shown, may admit any evidence filed in contravention of an applicable deadline in the pre-hearing order where he determines that such evidence would be useful and material to the proceedings. A copy of the record of the public hearing, if any, shall be admitted, but shall not control the proceedings of the formal hearing.

(c) Whenever any evidence or testimony is excluded by the Hearing Officer as inadmissible, so much of the excluded material as is in written form shall remain in the record as an offer of proof, and shall be marked "excluded" by the Hearing Officer. Where oral testimony is excluded, the party seeking to introduce it may make an offer of proof in the form of a brief descriptive statement for the record.

(d) The Hearing Officer may, on his own motion, and shall, on the objection of any party, rule on the relevance, propriety and conduct of the presentation of evidence, cross-examination and rebuttal, and may prohibit any presentation, examination, cross-examination and rebuttal that

is irrelevant, immaterial, unsubstantial, privileged, repetitious, abusive, argumentative or otherwise improper.

9 VAC 25-230-170 Record of Proceedings, Proposed Findings and Conclusions from Formal Hearing.

(a) A verbatim record of the hearing shall be made by a Court Reporter. The Executive Secretary or his designee shall act as custodian of the record, which shall include the transcript along with all written testimony, arguments, exhibits, reports, studies, and documents or written material of any kind submitted by the staff or the parties and admitted under §§ 1.25 and 1.26, and offers of proof placed in the record under § 1.26(c). A copy of the record shall be maintained for public inspection at the Board's headquarters in Richmond. Where a Subordinate Hearing Officer presides over the hearing, he shall promptly certify the original record as the true and official transcript of the proceedings, including a statement that the evidence therein contained and the exhibits thereunto appended represent all of the testimony offered and received into evidence at the hearing.

(b) When the hearing is before the Board, parties to the hearing may submit proposed findings of fact, conclusions of law and a statement of reasons therefore to the Board. Such proposed findings shall be in writing, shall cite relevant authority, and shall be submitted prior to or at the hearing unless the Board specifically allows submission after the hearing.

(c) When the hearing is not before the full Board, parties to the hearing may present oral arguments to the hearing officer and may submit proposed findings of fact, conclusions of law and a statement of reasons therefore to the Executive Secretary. Such proposed findings, conclusions and statement shall be in writing, shall cite relevant authority, and shall be submitted at a time prescribed by the hearing officer, which shall not be later than ten days after the hearing unless otherwise authorized by the Hearing Officer. The Hearing Officer shall consider the proposed findings, conclusions and statements timely submitted by the parties. He shall prepare his own recommended findings and decision and, promptly after the close of the hearing, transmit them to the Board along with the hearing record. At the time of transmittal of the record, the Hearing Officer shall mail copies of his recommended findings and decision to the parties. The Board will receive and act upon exceptions to those recommended findings and conclusions for 21 days after their mailing to the parties. The proposed findings and conclusions submitted by any party are advisory only, and shall not be binding on the Hearing Officer or the Board. But they shall be included in the hearing record and the Board and the Hearing Officer shall be required to consider them in making any decision hereunder.

9 VAC 25-230-180 Decision of the Board Following Formal Hearing.

(a) After the close of the hearing, the Board shall make a final decision to issue, deny, modify or revoke the permit in question or take or not take any other action proposed, and, in so doing, adopt explicit findings of fact and conclusions of law. In making its decision the Board shall consider the entire record of the proceeding, any recommended findings and decision submitted by a Subordinate Hearing Officer, and proposed findings and conclusions. Upon request, a party may present oral arguments to the Board before it makes its decision.

(b) The decision of the Board rendered after a formal hearing must be reduced to writing and contain the explicit findings of fact and conclusions of law upon which the decision is based. Copies of the decision, certified by the Executive Secretary, shall be mailed by certified mail to all of the parties to the hearing.

ATTACHMENT R

1. Hearing Procedures
2. Hearings Checklist
3. Notice Content Format
4. Statutory and Regulatory Considerations

HEARING PROCEDURES

STATE WATER CONTROL BOARD

FOR ADDITIONAL INFORMATION CONTACT THE OFFICE OF POLICY AND LEGISLATION

TABLE OF CONTENTS

PART I - INFORMAL PUBLIC HEARINGS FOR PERMIT/CERTIFICATE ACTIONS

VPDES PERMITS, VPA PERMITS, 401 CERTIFICATIONS, GROUNDWATER PERMITS

1. Determining Need for Hearing
2. Authorization to Deny or Convene a Hearing
3. Arrangements for Hearing
4. Conduct of Hearing
5. Board Action

Appendix A - Part 1, Hearings Checklist
Appendix A - Part 2, Submittal Checklist
Appendix B.1 - Notice Content Format
Appendix B.2 - Notice of Content Format, Ground Water Withdrawal Permits
Appendix C - Statutory and Regulatory Considerations

I. Types of Hearings
II. Factors to be Considered in Determining Need for Hearing
III. Factors for Dispensing with Hearing
IV. Notice Requirements for Hearings
V. Requirements for Holding Hearing Record Open

Appendix D - Official File Exhibit List
Appendix E - Example of Opening Remarks For Public Hearings

PART II - FORMAL HEARINGS

(TO BE DEVELOPED - WILL INCLUDE FORMAL HEARINGS, SPECIAL ORDER HEARINGS & REVOCATION OF PERMITS/CERTIFICATES)

PART III - REGULATORY HEARINGS

(TO BE DEVELOPED)

PROCEDURES
FOR
INFORMAL PUBLIC HEARINGS - PERMIT ACTIONS

This section sets forth internal Agency procedures for all informal permit public hearings. Its purpose is to identify specific legal requirements for hearings (see Appendix C), specific steps to be taken for authorizing and convening these hearings and acquiring Board action, and the responsibilities of various Agency units in the hearing process. In addition to the detailed procedures, there are several appendices which provide more guidance on certain steps in the hearing process, including Appendix A which provides a checklist that summarizes the steps of the process once a hearing has been authorized. These procedures are to be used by all Division of Water Program Coordination units.

VPDES Permits; VPA Permits; VWPPs; Surface Water Permits; Ground Water Permits. Procedures do not apply to terminations.

1. Determining Need for Hearing on Applications for Permits

   a. VPDES Permits - VPA Permits - VWP Permits - Ground Water Permits

      1. Originating Unit (OU) causes notice of comment period on application to be issued to the public; to the chief elected official, chief administrative officer and planning district commission for any locality particularly affected; and, in a newspaper of general circulation (once/week for two consecutive weeks) in the area in accordance with the State Water Control Law, federal law, or applicable regulations. For Ground Water Permits, OU sends notice of an application to each local governing body in the ground water management area and to each local governing body having the right to make substantial beneficial uses of ground water.
      (**NOTE**: <u>30-day comment period begins on date of first publication of the notice in the newspaper.</u>)

      (**NOTE:** The term "locality particularly affected" means any locality which bears any identified disproportionate material water quality impact which would not be experienced by other localities. For example, for a VPDES permit, locality particularly affected would include the locality where the facility is located and if a mixing zone extended into another locality, notice should also be published in that locality; at DEQ's cost)

      2. OU maintains list of those individuals, organizations, etc. that responded to the notice of the application.

      3. OU reviews all responses to the public notice and requests for public hearing in order to make a recommendation on the need for a public hearing. (**NOTE**: Final decision on holding a public hearing must be made by the Regional Director (In those cases where the RD's absence may result in an unusual hardship upon an owner, violation of a regulatory deadline, or where the RD may be absent for an extended period of time, the Regional Permit Manager is authorized to convene or deny public hearing requests.) within 30 days after the close of the public comment period above. In those cases where the owner has requested a hearing and there has been no notice of the comment period, the final decision on holding a public hearing should be made by the Regional Director within 30 days after the request for public hearing was received.

      4. OU makes a determination as to whether the responses and requests meet the applicable provisions of Section II and III of Appendix C.

      (a) If the responses and requests do not meet the provisions of Section II, but meet the provisions of Section III; the OU will proceed under Section 2. for authorization to deny holding a hearing.
      (b) If the responses meet the applicable provisions of Section II, the OU will proceed under Section 2. for authorization to convene a hearing.

   b. Denials of VPDES Permits - VPA Permits - VWP Permits - Ground Water Permits

1. OU makes a determination to recommend denial of a permit.

2. OU can proceed to public notice of the proposed denial of the permit or can proceed to seek authorization to do joint public comment and public hearing by proceeding with #2 below to final resolution.

2. Authorization to Deny or Convene a Hearing

a. The OU shall prepare an authorization memorandum to the Regional Director which includes:
   1. brief background
   2. copy of notification in local paper of general circulation in the localities affected
   3. copy of notification to chief elected local official, chief administrative officer, and local planning district commission
   4. summary of responses and requests from public notices
   5. summary of OU's attempts to address comments from the public
   6. analysis of review of responses and requests as they apply to Section 1.a.4.
   7. recommendation for denying or holding a hearing
   8. rationale for recommendation
   9. target date for Board action
   10. copy of responses received (if there is a large number, send representative samples)

b. OU submits the following to the Regional Director:

   1. authorization memorandum (described in 2.a.)
   2. copy of public notice (if issued), the name of the newspaper the notice was published in, and the dates of publication
   3. addressed envelopes for the owner, chief elected local official, chief administrative officer, local planning district commission, and those individuals and organizations who responded to the public notice to notify persons of the hearing or a sample of the letter for the OU Director's signature to inform persons that a hearing has been denied
   4. necessary permit/certificate/certification documents for Regional Director's signature if recommendation is to deny convening a hearing

c. Regional Director approves recommendation and, (1) in the case of denial, signs the permit/certificate/certification documents, returns package to OU and directs the OU to sign and mail the notification letters. (2) in the case of approval of convening a hearing, forwards the package to the OU. (**Note:** Any letters prepared to notify persons that a hearing has been authorized should be for the OU Director's signature and mailed upon notification that the Regional Director has authorized a hearing.)

   (Note: Should Regional Director disapprove recommendation, the package will be returned to the OU for appropriate action.)

3. Arrangements for Hearing

a. OU determines legal requirements for notice of public hearing and completes checklist for hearing (See Appendix A).

b. OU arranges for a convenient date and location for the hearing allowing for compliance with all legal requirements.

c. OU arranges for a Hearing Officer by contacting the Board Member that is nearest geographically to the hearing site.

d. OU establishes date, 15 days after hearing, for close of hearing file.

e. OU prepares draft notice for review by Policy and Planning Supervisor (See boilerplate language in Appendix B).

f. OU finalizes notice and forwards a copy to the Policy and Planning Supervisor.

g. OU is responsible for mailing the notice to interested parties, Board Members, and appropriate Agency staff including: copying the notice, acquiring necessary mailing labels from DIS, ensuring availability of sufficient postage, etc.

h. OU sends notice to newspaper for publication in accordance with notice requirements in Appendix B and verifies newspaper receipt of notice.

i. Policy and Legislation causes notice of hearing to be published in the Virginia Register.

j. OU prepares opening remarks for Hearing Officer (See Appendices C & E).

k. OU prepares technical presentation for hearing officer and briefs the hearing officer.

(**NOTE**: Briefing of hearing officer can be an updated hearing authorization memorandum or the technical presentation if it is sufficient to inform the Hearing Officer of the background and the issues surrounding the permit action.)

l. OU starts official file (exhibit list--See Appendix D). Originals should be used when possible.

(**NOTE**: Material for the record should include, at a minimum, the draft permit, responses to the public notice, hearing authorization memorandum, hearing notice certifications, and all technical documents necessary to support the staff's anticipated recommendation to the Board.)

m. OU sends package to Hearing Officer (opening remarks, briefing memorandum, travel arrangements, map, etc.) 10 days prior to hearing.

n. OU Director or appropriate staff member may contact the hearing officer approximately 7 days before the hearing in order to set up a meeting prior to the hearing, if the hearing officer deems necessary.

4. Conduct of Hearing

a. Attendees include technical support personnel from OU, and management representatives from the appropriate headquarters or regional office based on program or geographical areas of responsibility.

b. OU tapes proceedings and receives all written statements for inclusion in the hearing file.

c. OU closes file in accordance with date specified in notice.

d. OU prepares a general summary of the hearing, in memorandum format, for presentation to the Board.

e. OU reviews technical issues and develops preliminary recommendations for concurrence by the Regional Director for Board action.

5. Board Action

a. OU prepares proposed agenda item form, including proposed Board decision, and submits to the Office of Policy and Legislation, in accordance with applicable Board meeting schedule.

b. OU prepares memorandum containing background, reference to the hearing and attaches summary of public comments, discussion of technical issues and recommendations (on separate sheet of paper) for Board action.

c. OU prepares and presents technical presentation and summary of the hearing to the Board and makes staff recommendations.

d. OU prepares minute setting forth Board action.

e. OU prepares documentation to carry out Board action for Regional Director's signature (permit, transmittal letter, etc.) and transmits documents to owner and other appropriate parties.

APPENDIX A - PART 1
HEARING CHECKLIST

ACTIVITY		RESPONSIBILITY	DUE DATE (IF APPLICABLE)
1.	Prepare & submit authorization	OU	
2.	Acquire Regional Director Approval	OU	
3.	Notify Policy & Legislation	OU	
4.	Contact Board Member to Serve as Hearing Officer	OU	
5.	Arrange Date, Time, & Location for Hearing	OU	
6.	Draft Notice for Public & Newspaper	OU	
7.	Review and Approve Notice	Policy & Planning Supervisor	
8.	Develop Mailing & Newspaper Lists	OU	
9.	Finalize & Distribute Notice to Newspapers, Virginia Register, SWCB Members, Office Directors, & Public/Owner/Petitioners	OU Policy & Legislation Prepares Submission to Virginia Register	
10.	Verify Receipt of Notice by Newspapers	OU	
11.	Prepare Opening Remarks for Hearing Officer (See Appendix E)	OU	
12.	Prepare Technical Presentation	OU	
13.	Prepare Briefing Memorandum	OU	
14.	Establish Official File/Exhibit List (See Part 2 of Appendix A and Appendix D)	OU	
15.	Send Package to Hearing Officer (See Part 2 of Appendix A)	OU	
16.	Contact Hearing Officer to Schedule a Meeting Prior to the Hearing	OU	
17.	Hold Hearing	OU/ Hearing Officer	
18.	After Hearing, Complete File (See Appendix D) (Prepare Transcript, If Required)	OU	
19.	Prepare summary of Public Comments for Board	OU	

20.	Prepare & Submit to Office of Policy and Legislation a Proposed Agenda Item Form	OU	
21.	Acquire Regional Director's Approval of Agenda Item (Agenda Review)	OU	
22.	Submit Agenda Materials for Distribution to the Board	OU	
23.	Prepare Technical Presentation for Board Meeting	OU	
24.	Review and Approve Technical Presentation	RD	
25.	Make Technical Presentation to the Board and Present Summary of Public Comments to the Board	OU	
26.	Prepare Minute of Board Action and Other Documents Resulting From Board Action	OU	
27.	Submit Minute with Regional Director's Approval to Office of Policy and Legislation	OU	
28.	Submit All Permit/Certificate Documents to the Regional Director for Approval and Transmit Documents to Owner & Other Appropriate Parties	OU	

APPENDIX A - PART 2
SUBMITTAL CHECKLIST

SUBMITTAL ITEM & COMPONENTS	SUBMITTED
Denial Package (From OU) * memorandum * copy of responses to public notice * sample letter to responders from OU Director * permit/certificate package for Regional Director's signature	
Authorization Package (From OU) * memorandum * copy of public notice, and give the name of the newspapers which ran the public notice, and date of publication * list of individuals, organizations who responded to the public notice * addressed envelopes for the owner and those individuals and organizations who responded to the public notice	_____ _____ _____ _____
Technical Presentation (From OU)	_____
Briefing Memorandum For Hearing Officer (From OU)	_____
Material for Hearing File (From OU) * draft permit - fact sheet * responses to public notice * authorization memorandum * hearing notice * newspaper notice certifications * technical support documentation	_____ _____ _____ _____ _____ _____
Hearing Officer Package (OU) * briefing memorandum * opening remarks * travel arrangements	_____ _____ _____

APPENDIX B.1 - NOTICE CONTENT FORMAT

The State Water Control Board will hold a public hearing to receive comments on the proposed (type of action) for (name of facility), (facility mailing address). The purpose of the hearing is to receive comments on the (proposed action).

(Name of facility) is a (type of operation) with (an existing or a proposed) discharge from its (type of discharge) to (receiving stream). The facility is located at (location of facility).

Public Notice No. (number) for the proposed (type of action) was published in the (name of papers) on (dates). Some individuals who responded to the public notice expressed concern over the (statement of concern).

The hearing will be held in the (location) on (date) at (time). In addition, the Department of Environmental Quality's staff will conduct an informational briefing on this (type of action) at 6:30 p.m. The public is invited to hear a brief explanation of the permit and questions are welcomed. This informal, fact-finding proceeding is being held pursuant to Section 9-6.14:11 of the Code of Virginia, (list section of State Water Control Law, Agency regulation and/or procedure).

The hearing is being held at a public facility believed to be accessible to persons with disabilities. Any person with questions on the accessibility should contact (give name of staff contact) at the address below or by telephone at (give phone number). Interpreter services for the deaf will be provided, if requested. Persons needing interpreter services for the deaf must notify (staff contact) no later than (date [at least ten working days before hearing]).

Anyone wishing to speak at the hearing may do so, subject to any limitations imposed by the Hearing Officer. Anyone wishing to submit written comments for the public comments file may do so at the hearing or by mail. Comments must be received by (give time and date for closing file), at which time the file will close. Written comments should include the name and address of the presenter and a complete, concise statement of the factual basis for the comments. The comments should be addressed to (give staff contact's name, address and telephone number).

More specific information on the proposed (type of action) including the fact sheet, draft permit and other documents are available by contacting (give name of permit writer or supervisor, grade 13 or above) at the Department of Environmental Quality (address).

APPENDIX B.2- NOTICE OF CONTENT FORMAT
Ground Water Withdrawal Permits

The State Water Control Board will hold a public hearing to receive comments on the proposed ground water permit application for (name of facility), (facility mailing address). The purpose of the hearing is to receive comments on the proposed (amount of withdrawal requested) gallon per day withdrawal.

(Name of facility) is a (type of operation) with (an existing or a proposed) withdrawal from the (aquifer name(s)). The withdrawal facility is located at (location of facility with route numbers, road intersections, map locations or similar information). The withdrawal will be applied to the following beneficial use: (describe intended beneficial use).

Public Notice No. (number) for the proposed (type of action) was published in the (name of papers) on (date). Some individuals who responded to the public notice expressed concern over the (briefly describe the statement of concern).

The hearing will be held in the (location) on (date) at (time). In addition, the Department of Environmental Quality staff will conduct an informational briefing on this (type of action) at 6:30 p.m. The public is invited to hear a brief explanation of the permit and questions are welcomed. This informal, fact-finding proceeding is being held pursuant to Section 9-6.14:11 of the Code of Virginia, (list section of State Water Control Law, Agency regulation and/or procedure).

The hearing is being held at a public facility believed to be accessible to persons with disabilities. Any person with questions on the accessibility should contact (give name of staff contact) at the address below or by telephone at (give phone number). Interpreter services for the deaf will be provided, if requested. Persons needing interpreter services for the deaf must notify (staff contact) no later than (date [at least ten working days before hearing]).

Anyone wishing to speak at the hearing may do so, subject to any limitations imposed by the Hearing Officer. Anyone wishing to submit written comments for the public comments file may do so at the hearing or by mail. Comments must be received by (give time and date for closing file), at which time the file will close. Written comments should include the name and address of the presenter and a complete, concise statement of the factual basis for the comments. The comments should be addressed to (give staff contact's name, address and telephone number).

More specific information on the proposed (type of action) including the fact sheet, draft permit and other documents are available by contacting (give name of permit writer or supervisor, grade 13 or above) at the Department of Environmental Quality (address).

APPENDIX C
STATUTORY AND REGULATORY CONSIDERATIONS FOR HEARINGS

I. Types of Hearings

A. Virginia Pollutant Discharge Elimination System (VPDES) Permit - Issuance, Modification, Revocation and Reissuance, or Termination
B. Virginia Pollution Abatement Permit (Industrial, Animal Wastes, etc.) - Issuance, Modification, Revocation and Reissuance, or Termination
C. VWPPs - Issuance, Modification, or Revocation
D. Groundwater Withdrawal Permits - Issuance, Modification, or Revocation

II. Factors to be Considered in Determining Need for Hearing Based on Responses to Public Notice of VPDES, VPA, VWPP and Ground Water Withdrawal Permit Actions

- That there is significant public interest in the action, and
- That there are substantial disputed issues relevant to the permit action, and
- That the issuance is not inconsistent with, or in violation of, the Water Control Law, federal law, or any regulation promulgated thereunder, or
- That a public hearing is required by statute.

III. Factors for Dispensing with Hearing

A. VPDES Permits - VPA Permits - VWPPs - Ground Water Permits All Actions [Section 1.14(a) of Procedural Rule No. 1]

- Where no person other than the applicant or permittee has requested a hearing, and
- Where no hearing is required by statute.

IV. Notice Requirements for Hearings

A. VPDES Permit Actions - All

1. State Water Control Law [Section 62.1-44.15(5)]
   30 days notice of time, date, place and purpose to owner/applicant for amendment or revocation.
2. 9 VAC 25-31-290
   - 30 days notice to be published at least once in a newspaper of general circulation in the county or city where the discharge is to occur.
   - 30 days notice to all persons and government agencies who received public notice of application.
   - Content:
     Name and address of each owner whose application will be considered at the hearing.
     Description of the owner's activities or operations which result in the discharge.
     Name of receiving stream.
     Description of location and type of discharge to State waters.
     Reference to the public notice issued for the application, including the identification number and date of issuance unless the public notice and hearing notice are joint.
     Date, time and location of the hearing.
     Purpose of the hearing.
     Statement of the issues raised by the persons requested the hearing.
     Address of Agency office at which additional information on the application can be obtained.
     Reference to the procedures to be followed at the hearing.

3. Procedural Rule No. 1 [Section 1.12(d)]

- Not less than 30 or more than 60 days notice of the time, date and place of the hearing.
- Notice to be given to each requester and the applicant or permittee.
- Content:
  Same as 9 VAC 25-31-290.

B. VPA Permit Actions - All

1. State Water Control Law [Section 62.1-44.15(5)]
   - 30 days notice of time, date and place of owner/application for amendment or revocation.
2. 9 VAC 25-31-290
   - 30 days notice to be published at least once in a newspaper of general circulation in the county or city where the discharge is to occur.
   - 30 days notice to all persons and government agencies who received public notice of application.
   - Content:
     Name and address of each owner whose application will be considered at the hearing.
     Description of the owner's activities or operations which result in the discharge.
     Name of receiving stream.
     Description of location and type of discharge to State waters.
     Reference to the public notice issued for the application, including the identification number and date of issuance unless the public notice and hearing notice are joint.
     Date, time and location of the hearing.
     Purpose of the hearing.
     Statement of the issues raised by the persons requested the hearing.
     Address of Agency office at which additional information on the application can be obtained.
     Reference to the procedures to be followed at the hearing.

3. Procedural Rule No. 1 [Section 1.12(d)]

   - Not less than 30 or more than 60 days notice of the time, date and place of the hearing.
   - Notice to be given to each requester and the applicant or permittee.
   - Content:
     Same as 9 VAC 25-31-290.

C. VWPPs Actions - All

1. State Water Control Law [Section 62.1-44.15(5)

   - 30 days notice of time, date and place to owner/applicant for amendment or revocation.

2. Procedural Rule No. 1 [Section 1.12(d)]

   - 30 days notice of time, date, place and purpose to be published once in a newspaper of general circulation in the city or county where activity/operation is located.- 30 days notice of time, date and place to owner.
   - 30 days to all individuals that requested hearing.

3. Procedural Rule No. 3 [Section 3.07]

   - Same as Procedural Rule No. 1
   - Content:
     Name and address of each owner whose application will be considered at the hearing.
     Description of the owner's activities or operations which result in the discharge.
     Name of receiving stream.
     Description of location and type of discharge to State waters.
     Reference to the public notice issued for the application, including the identification number and date of issuance unless the public notice and hearing notice are joint.
     Date, time and location of the hearing.
     Purpose of the hearing.

Statement of the issues raised by the persons requested the hearing.
Address of Agency office at which additional information on the application can be obtained.
Reference to the procedures to be followed at the hearing.

D. Groundwater Withdrawal Permits Actions - All

1. State Water Control Law [Section 62.1-44.15(5)]

   - 30 days notice of time, date and place to applicant for amendment or revocation.

2. VAC 25-610-280

   - 30 days notice to be published at least once in a newspaper of general circulation in the area affected by the proposed withdrawal.
   - 30 days notice to all persons and government agencies which received public notice application.
   - Content:
     Name and address of each person whose application will be considered at the hearing, the amount of ground water withdrawal requested expressed as an average gallonage per day, and a brief description of the beneficial use that will be supported by the proposed ground water withdrawal.
     Precise location of the proposed withdrawal and the aquifers that will support the withdrawal.
     Reference to the public notice issued for the permit or special exception application, including identification number and date of issuance unless the public notice includes the informal hearing notice.
     Date, time, and location of the hearing.
     Purpose of hearing.
     Statement of issues raised by the persons requesting the hearing.
     Name and address of agency contact where additional information can be obtained.
     Reference to the rules and procedures to be followed at the hearing.

3. Procedural Rule No. 1 [Section 1.12(d)]

   - Not less than 30 or more than 60 days notice of the time, date and place of the hearing.
   - Notice to be given to each requested and the applicant or permittee.

V. Requirements for Holding File Open

All Permits - 15 days after public hearing

APPENDIX D
Official File
Exhibit List

The Originating Unit (OU) is responsible for establishing the official file/exhibit list. The official file should contain as applicable:

- Copy of the mailing list or name of list
- List of attendees at public hearing
- Exhibit List (which will be marked Exhibit #1)
- Notice of Proposed Regulatory Action
- Notice of Intended Regulatory Action
- Copies of Notices Published in Virginia Register
- Draft Permit - Fact Sheet
- Responses to Public Notice
- Authorization Memorandum
- Newspaper Notice Certification
- Technical Support Documentation

All documents should be marked "Exhibit No._____; Date-------; Hearing (Name of Action and Location(s)." This information should, when possible, be placed in the bottom right hand corner and can be typed or hand-written. An example Exhibit List is attached.

Once the hearing file has closed and action by the Board has been finalized, the hearing file should be submitted to Policy & Legislation for storing.

APPENDIX E

EXAMPLE OF OPENING REMARKS FOR PUBLIC HEARINGS

OPENING REMARKS

[NAME OF PERMITTEE]

[DATE]

Good evening ladies and gentlemen. My name is [Board Member] and I'm a member of State Water Control Board. I will serve as Hearing Officer for tonight's hearing. At this time I would like to introduce staff present: [list all DEQ staff members in attendance].

We will be taping all public testimony for the official record. The public record will close at 4 p.m. on [Give Day/Month/Year].

The State Water Control Board is holding this hearing to receive comments on the [give description of action]. This hearing was authorized by the Regional Director of the [list regional office], Department of Environmental Quality. Notice of this hearing was published in [list name(s) of newspapers]. This fact finding proceeding is being held pursuant to Section 9.6-41:11 of the Code of Virginia, 9 VAC 25-31-240 (Permit Regulations), 9 VAC 25-260-270 (Water Quality Standards) -[if applicable] and the Board's Procedural Rule No. 1.

The State Water Control Board will ultimately decide whether to [issue/reissue] the permit. There will be no decision made here tonight; it will be made at the next meeting of the Board [if known, give date of next Board Meeting]. Please be assured that we will consider all relevant information that you present regarding the [action].

The general procedure for this hearing will be as follows: [list name of person making staff presentation] will make the staff presentation. Next, I will call on those people who have indicated on the sign-in cards that they wish to testify. Finally, we will hear from anyone else who would like to make a statement.

In the interest of saving time, and if there are no objections, I will enter the exhibits which we have received to date into the record by incorporating the Exhibit List as Exhibit No. 1.

Are there any objections? Hearing none, they are so entered. This list is here for your inspection. The public record will close at 4 p.m. on [day,date/year].

At this time, I will call on [staff person giving presentation].

ATTACHMENT S

1. Ground Water Management Act of 1992

§ 62.1-254. Findings and purpose. - The General Assembly hereby determines and finds that, pursuant to the Groundwater Act of 1973, the continued, unrestricted usage of ground water is contributing and will contribute to pollution and shortage of ground water, thereby jeopardizing the public welfare, safety and health. It is the purpose of this Act to recognize and declare that the right to reasonable control of all ground water resources within this Commonwealth belongs to the public and that in order to conserve, protect and beneficially utilize the ground water of this Commonwealth and to ensure the public welfare, safety and health, provision for management and control of ground water resources is essential.

§ 62.1-255. Definitions. - As used in this chapter, unless the context requires otherwise:

"Beneficial use" includes, but is not limited to, domestic (including public water supply), agricultural, commercial, and industrial uses.

"Board" means the State Water Control Board.

"Ground water" means any water, except capillary moisture, beneath the land surface in the zone of saturation or beneath the bed of any stream, lake, reservoir or other body of surface water wholly or partially within the boundaries of this Commonwealth, whatever the subsurface geologic structure in which such water stands, flows, percolates or otherwise occurs.

"Ground water withdrawal permit" means a certificate issued by the Board permitting the withdrawal of a specified quantity of ground water in a ground water management area.

"Person" means any and all persons, including individuals, firms, partnerships, associations, public or private institutions, municipalities or political subdivisions, governmental agencies, or private or public corporations organized under the laws of this Commonwealth or any other state or country.

§ 62.1-256. Duties of Board. - The Board shall have the following duties and powers:

1. To issue ground water withdrawal permits in accordance with regulations adopted by the Board;

2. To issue special orders as provided in § 62.1-268;

3. To study, investigate and assess ground water resources and all problems concerned with the quality and quantity of ground water located wholly or partially in the Commonwealth, and to make such reports and recommendations as may be necessary to carry out the provisions of this chapter;

4. To require any person withdrawing ground water for any purpose anywhere in the Commonwealth, whether or not declared to be a ground water management area, to furnish to the Board such information with regard to such ground water withdrawal and the use thereof as may be necessary to carry out the provisions of this chapter, excluding ground water withdrawals occurring in conjunction with activities related to exploration for and production of oil, gas, coal or other minerals regulated by the Department of Mines, Minerals and Energy;

5. To prescribe and enforce requirements that naturally flowing wells be plugged or destroyed, or be capped or equipped with valves so that flow of ground water may be completely stopped when said ground water is not currently being applied to a beneficial use; 6. To enter at reasonable times and under reasonable circumstances, any establishment or upon any property, public or private, for the purposes of obtaining information, conducting surveys or inspections, or inspecting wells and springs, and to duly authorize agents to do the same, to ensure compliance with any permits, standards, policies, rules, regulations, rulings and special orders which it may adopt, issue or establish to carry out the provisions of this chapter;

7. To issue special exceptions pursuant to § 62.1-267;

8. To adopt such regulations as it deems necessary to administer and enforce the provisions of this chapter; and

9. To delegate to its Executive Director any of the powers and duties invested in it to administer and enforce the provisions of this chapter except the adoption and promulgation of rules, standards or regulations; the revocation of permits; and the issuance, modification, or revocation of orders except in case of an emergency as provided in subsection B of § 62.1-268.

§ 62.1-257. When Board may initiate a ground water management area study proceeding; hearing required. - A. The board upon its own motion or, in its

discretion, upon receipt of a petition by any county, city or town within the area in question, may initiate a ground water management area proceeding, whenever in its judgment there may be reason to believe that:

1. Ground water levels in the area are declining or are expected to decline excessively;

2. The wells of two or more ground water users within the area are interfering or may reasonably be expected to interfere substantially with one another;

3. The available ground water supply has been or may be overdrawn; or

4. The ground water in the area has been or may become polluted. Such pollution includes any alteration of the physical, chemical or biological properties of ground water which has a harmful or detrimental effect on the quality or quantity of such waters.

B. If the Board finds that any one of the conditions required above exists, and further finds that the public welfare, safety and health require that regulatory efforts be initiated, the Board shall by regulation declare the area in question to be a ground water management area. The Board shall include in its regulation a definition of the boundaries of the ground water management area. The Board shall mail a copy of the regulation to the mayor or chairman of the governing body of each county, city or town within which any part of the area lies.

§ 62.1-258. Use of ground water in ground water management area. - It shall be unlawful in a ground water management area for any person to withdraw, attempt to withdraw, or allow the withdrawal of any ground water, other than in accordance with a ground water withdrawal permit or as provided in § 62.1-259, subsections C, D and F of § 62.1-260, and subsection C of § 62.1-261.

§ 62.1-259. Certain withdrawals; permit not required. - No ground water withdrawal permit shall be required for (i) withdrawals of less than 300,000 gallons a month; (ii) temporary construction dewatering; (iii) temporary withdrawals associated with a state-approved ground water remediation; (iv) the withdrawal of ground water for use by a ground water heat pump where the discharge is reinjected into the aquifer from which it is withdrawn; (v) the withdrawal from a pond recharged by ground water without mechanical assistance; (vi) the withdrawal of water for geophysical investigations, including pump tests; (vii) the withdrawal of ground water coincident with exploration for and extraction of coal or activities associated with coal mining regulated by the Department of Mines, Minerals and Energy; (viii) the withdrawal of ground water coincident with the exploration for or production of oil, gas or other minerals other than coal, unless such withdrawal adversely impacts aquifer quantity or quality or other ground water users within a ground water management area; (ix) the withdrawal of ground water in any area not declared a ground water management area; or (x) the withdrawal of ground water pursuant to a special exception issued by the Board.

§ 62.1-260. Permits for existing ground water withdrawals in existing ground water management areas. - A. Persons holding a certificate of ground water right or a permit to withdraw ground water issued prior to July 1, 1991, in the Eastern Virginia or Eastern Shore Groundwater Management Areas and currently withdrawing ground water pursuant to said certificate or permit shall file an application for a ground water withdrawal permit on or before December 31, 1992, in order to obtain a permit for withdrawals. The Board shall issue ground water withdrawal permits for the total amount of ground water withdrawn during any consecutive twelve-month period between July 1, 1987, and June 30, 1992, together with such savings as can be demonstrated to have been achieved through water conservation; however, with respect to a political subdivision, an authority serving a political subdivision or a community waterworks regulated by the Department of Health, the permit shall be issued for the total amount of ground water withdrawn during any consecutive twelve-month period between July 1, 1980, and June 30, 1992, together with such savings as can be demonstrated to have been achieved through water conservation.

B. Persons holding a certificate of ground water right issued on or after July 1, 1991, and prior to July 1, 1992, in the Eastern Virginia or Eastern Shore Groundwater Management Areas and currently withdrawing ground water pursuant to the certificate shall file an application for a ground water withdrawal permit on or before December 31, 1993, in order to obtain a permit for withdrawals. The Board shall issue groundwater withdrawal permits for the total amount of ground water withdrawn during any consecutive twelve-month period between July 1, 1988, and June 30, 1993, together with such savings as can be demonstrated to have

been achieved through water conservation.

C. Persons holding a permit to withdraw ground water issued on or after July 1, 1991, and prior to July 1, 1992, in the Eastern Virginia or Eastern Shore Groundwater Management Areas shall not be required to apply for a ground water withdrawal permit until the expiration of the term of the permit to withdraw ground water as provided in subsection C of § 62.1-266, and may withdraw ground water pursuant to the terms and conditions of the permit to withdraw ground water. Such persons may apply for a ground water withdrawal permit allowing greater withdrawals of ground water than are allowed under an existing permit, and the Board in its discretion may issue a permit for such greater withdrawals, upon consideration of the factors set forth in § 62.1-263.

D. Persons holding a certificate of ground water right issued prior to July 1, 1992, or a permit to withdraw ground water issued prior to July 1, 1991, in the Eastern Virginia or Eastern Shore Groundwater Management Areas, who have not withdrawn ground water prior to July 1, 1992, may initiate a withdrawal on or after July 1, 1992, pursuant to the terms and conditions of the certificate or permit. The persons shall file an application for a ground water withdrawal permit on or before December 31, 1995, and may continue withdrawing ground water under the terms and conditions of their certificate or permit until the required ground water withdrawal permit application is acted on by the Board, provided that the ground water withdrawal permit application is filed on or before December 31, 1995. The Board shall issue a ground water withdrawal permit for the total amount of ground water withdrawn and applied to a beneficial use during any consecutive twelve-month period between July 1, 1992, and June 30, 1995, together with (i) such savings as can be demonstrated to have been achieved through water conservation and (ii) such amount as the Board in its discretion deems appropriate upon consideration of the factors set forth in § 62.1-263. This subsection shall not apply to a political subdivision, or an authority serving a political subdivision, holding a permit or certificate for a public water supply well for supplemental water during drought conditions, which shall apply for a ground water withdrawal permit as provided in § 62.1-265.

E. Persons withdrawing ground water for agricultural or livestock watering purposes in the Eastern Virginia or Eastern Shore Groundwater Management Areas on or before July 1, 1992, shall file an application for a ground water withdrawal permit on or before December 31, 1993, in order to obtain a permit for withdrawals. The Board shall issue ground water withdrawal permits for the total amount of ground water withdrawn during any consecutive twelve-month period between July 1, 1983 and June 30, 1993, together with such savings as can be demonstrated to have been achieved through water conservation.

F. Persons withdrawing ground water for agricultural or livestock watering purposes, or pursuant to certificates of ground water right or permits to withdraw ground water issued prior to July 1, 1992, in the Eastern Virginia or Eastern Shore Groundwater Management Areas, may continue such withdrawal until the required permit application is acted on by the Board, provided that the permit application is filed by the appropriate deadline.

G. Persons applying for a ground water withdrawal permit may request that they be permitted to withdraw more ground water than the amount to which they may be entitled based on their historic usage and water conservation as set forth in this section. The Board in its discretion may issue a permit for a greater amount than that which is based on historic usage and water conservation, upon consideration of the factors set forth in § 62.1-263.

H. Failure by any person covered by the provisions of subsection A, B, D or E to file an application for a ground water withdrawal permit prior to the expiration of the applicable period creates a presumption that any claim to withdraw ground water based on history of usage has been abandoned. In reviewing any application for a ground water withdrawal permit subsequently made by such a person, the Board shall consider the factors set forth in § 62.1-263.

§ 62.1-261. Permits for existing ground water withdrawals in newly established ground water management areas. - A. Persons withdrawing ground water in any area declared a ground water management area on or after July 1, 1992, shall file an application within six months after the ground water management area has been declared in order to obtain a permit for withdrawals. The Board shall issue permits for the total amount of ground water withdrawn during any consecutive twelve-month period in the five years preceding said declaration, together with such savings as can be demonstrated to have been achieved through water

conservation.

B. Persons withdrawing ground water for agricultural or livestock watering purposes in any area declared a ground water management area on or after July 1, 1992, shall file an application within six months after the ground water management area has been declared in order to obtain a permit for withdrawals. The Board shall issue permits for the total amount of ground water withdrawn during any consecutive twelve-month period in the ten-year period preceding such declaration, together with such savings as can be demonstrated to have been achieved through water conservation.

C. Persons withdrawing ground water in any area declared a ground water management area on or after July 1, 1992, may continue such withdrawal until the required permit application is acted on by the Board, provided that the permit application is filed within the six-month period following the declaration.

D. Persons applying for a ground water withdrawal permit issued pursuant to this section may request that they be permitted to withdraw more ground water than the amount to which they may be entitled based on their historic usage as set forth in this section. The Board in its discretion may issue a permit for a greater amount than that which is based on historic usage, upon consideration of factors set forth in § 62.1-263.

E. Failure by any person covered by the provisions of subsection A or B to file an application for a ground water withdrawal permit within the six months following the declaration of the ground water management area creates a presumption that any claim to withdraw ground water based on history of usage has been abandoned. In reviewing any application for a ground water withdrawal permit subsequently made by such a person, the Board shall consider the factors set forth in § 62.1-263.

§ 62.1-262. Permits for other ground water withdrawals. - Any application for a ground water withdrawal permit, except as provided in §§ 62.1-260 and 62.1-261, shall include a water conservation and management plan approved by the Board. A water conservation and management plan shall include: (i) use of water-saving plumbing and processes including, where appropriate, use of water-saving fixtures in new and renovated plumbing as provided under the Uniform Statewide Building Code; (ii) a water-loss reduction program; (iii) a water-use education program; and (iv) mandatory reductions during water-shortage emergencies including, where appropriate, ordinances prohibiting waste of water generally and providing for mandatory water-use restrictions, with penalties, during water-shortage emergencies. The Board shall approve all water conservation plans in compliance with subdivisions (i) through (iv) of this section.

§ 62.1-263. Criteria for issuance of permits. - When reviewing an application for a permit to withdraw ground water, or an amendment to a permit, the Board may consider the nature of the proposed beneficial use, the proposed use of alternate or innovative approaches such as aquifer storage and recovery systems and surface and ground water conjunctive uses, climatic cycles, unique requirements for nuclear power stations, economic cycles, population projections, the status of land use and other necessary approvals, and the adoption and implementation of the applicant's water conservation and management plan. In no case shall a permit be issued for more ground water than can be applied to the proposed beneficial use.

When proposed uses of ground water are in conflict or when available supplies of ground water are insufficient for all who desire to use them, preference shall be given to uses for human consumption, over all others.

In evaluating permit applications, the Board shall ensure that the maximum possible safe supply of ground water will be preserved and protected for all other beneficial uses.

In evaluating the available ground water with respect to permit applications for new or expanded withdrawals in the Eastern Virginia or Eastern Shore Groundwater Management Areas, the Board shall use the average of the actual historical ground water usage from the inception of the ground water withdrawals of a political subdivision or authority operating a ground water and surface water conjunctive use system and shall not use the total permit capacity of such system in determining such availability.

§ 62.1-264. Permits for public water supplies. - To ensure that any ground water withdrawal permit issued for a public water supply does not impact a waterworks operation permit issued pursuant to § 32.1-172, the maximum permitted daily withdrawal shall be set by the Board at a level consistent with the requirements and conditions contained in the waterworks operation permit. This section shall not limit the authority of the Board to reduce or eliminate ground

water withdrawals by a waterworks if necessary to protect human health or the environment. In promulgating regulations to implement this section, and in administering such regulations and this chapter, the Board shall consult and cooperate with the State Health Department to the end that effective, equitable management of ground water and safeguarding of public health will be attained to the maximum extent possible.

§ 62.1-265. Drought relief wells. - A political subdivision, or an authority serving a political subdivision, holding a certificate of ground water right issued prior to July 1, 1992, or a permit to withdraw ground water issued prior to July 1, 1992, in the Eastern Virginia or Eastern Shore Groundwater Management Areas, for the operation of a public water supply well for the purpose of providing supplemental water during drought conditions, shall file an application for a ground water withdrawal permit on or before December 31, 1992. The Board shall issue ground water withdrawal permits for supplemental drought relief wells for the amount of ground water needed annually to meet human consumption needs as documented by a water conservation and management plan approved by the Board as provided in § 62.1-262. Any ground water withdrawal permits for supplemental drought relief wells shall be issued with the condition that withdrawals may only be made at times that mandatory water use restrictions have been implemented pursuant to the water conservation and management plan.

§ 62.1-266. Ground water withdrawal permits. - A. The Board may issue any ground water withdrawal permit upon terms, conditions and limitations necessary for the protection of the public welfare, safety and health.

B. Applications for ground water withdrawal permits shall be in a form prescribed by the Board and shall contain such information, consistent with this chapter, as the Board deems necessary.

C. All ground water withdrawal permits issued by the Board under this chapter shall have a fixed term not to exceed ten years. The term of a ground water withdrawal permit issued by the Board shall not be extended by modification beyond the maximum duration, and the permit shall expire at the end of the term unless a complete application for a new permit has been filed in a timely manner as required by the regulations of the Board, and the Board is unable, through no fault of the permittee, to issue a new permit before the expiration date of the previous permit. Any permit to withdraw ground water issued by the Board on or after July 1, 1991, and prior to July 1, 1992, shall expire ten years after the date of its issuance.

D. Renewed ground water withdrawal permits shall be for a withdrawal amount that includes such savings as can be demonstrated to have been achieved through water conservation, provided that a beneficial use of the permitted ground water can be demonstrated for the following permit term.

E. Any permit issued by the Board under this chapter may, after notice and opportunity for a hearing, be amended or revoked on any of the following grounds or for good cause as may be provided by the regulations of the Board:

1. The permittee has violated any regulation or order of the Board pertaining to ground water, any condition of a ground water withdrawal permit, any provision of this chapter, or any order of a court, where such violation presents a hazard or potential hazard to human health or the environment or is representative of a pattern of serious or repeated violations which, in the opinion of the Board, demonstrates the permittee's disregard for or inability to comply with applicable laws, regulations or requirements;

2. The permittee has failed to disclose fully all relevant material facts or has misrepresented a material fact in applying for a permit, or in any other report or document required under this chapter or under the ground water withdrawal regulations of the Board;

3. The activity for which the permit was issued endangers human health or the environment and can be regulated to acceptable levels by amendment or revocation of the permit; or

4. There exists a material change in the basis on which the permit was issued that requires either a temporary or a permanent reduction or elimination of the withdrawal controlled by the permit necessary to protect human health or the environment.

F. No application for a ground water withdrawal permit shall be considered complete unless the applicant has provided the Executive Director of the Board with notification from the governing body of the county, city or town in which the withdrawal is to occur that the location and operation of the withdrawing facility is in compliance with all ordinances adopted pursuant to Chapter 11 (§ 15.1-427 et seq.) of Title 15.1. The provisions of this subsection shall not apply to any

applicant exempt from compliance under Chapter 11 (§ 15.1-427 et seq.) of Title 15.1.

G. A ground water withdrawal permit shall authorize withdrawal of a specific amount of ground water through a single well or system of wells, including a backup well or wells, or such other means as the withdrawer specifies.

§ 62.1-267. Issuance of special exceptions. - A. The Board may issue special exceptions to allow the withdrawal of ground water in cases of unusual situations where requiring the user to obtain a ground water withdrawal permit would be contrary to the intended purpose of the Act.

B. In reviewing an application for a special exception, the Board may consider the amount and duration of the proposed withdrawal, the beneficial use intended for the ground water, the return of the ground water to the aquifer, and the effect of the withdrawal on human health and the environment. Any person requesting a special exception shall submit an application to the Board containing such information as the Board shall require by regulation adopted pursuant to this chapter.

C. Any special exception issued by the Board shall state the terms pursuant to which the applicant may withdraw ground water, including the amount of ground water that may be withdrawn in any period and the duration of the special exception. No special exception shall be issued for a term exceeding ten years.

D. A violation of any term or provision of a special exception shall subject the holder thereof to the same penalties and enforcement procedures as would apply to a violation of a ground water withdrawal permit.

E. The Board shall have the power to amend or revoke any special exception after notice and opportunity for hearing on the grounds set forth in subsection D of § 62.1-266 for amendment or revocation of a ground water withdrawal permit.

§ 62.1-268. Issuance of special orders. - A. The Board may issue special orders (i) requiring any person who has violated the terms and provisions of a ground water withdrawal permit issued by the Board to comply with such terms and provisions; (ii) requiring any person who has failed to comply with a directive from the Board to comply with the provisions of this chapter or any decision of the Board pertaining to ground water to comply with such provision or decision.

B. Such special orders are to be issued only after a hearing with at least thirty days' notice to the affected person of the time, place and purpose thereof, and they shall become effective not less than fifteen days after service by certified mail, sent to the last known address of such person, with the time limits counted from the date of such mailing; however, if the Board finds that any such person is grossly affecting or presents an imminent and substantial danger to (i) the public welfare, safety or health; (ii) a public water supply; or (iii) commercial, industrial, agricultural or other beneficial uses, it may issue, without advance notice or hearing, an emergency special order directing the person to cease such withdrawal immediately and shall provide an opportunity for a hearing, after reasonable notice as to the time and place thereof to the person, to affirm, modify, amend or cancel such emergency special order. If a person who has been issued such a special order or an emergency special order is not complying with the terms thereof, the Board may proceed in accordance with § 62.1-269, and where the order is based on a finding of an imminent and substantial danger, the court shall issue an injunction compelling compliance with the emergency special order pending a hearing by the Board. If an emergency special order requires cessation of a withdrawal, the Board shall provide an opportunity for a hearing within forty-eight hours of the issuance of the injunction.

C. The provisions of this section notwithstanding, the Board may proceed directly under § 62.1-270 for any past violation or violations of any provision of this chapter or any regulation duly promulgated hereunder.

D. With the consent of any person who has violated or failed, neglected or refused to obey any regulation or order of the Board pertaining to ground water, any condition of a ground water withdrawal permit or any provision of this chapter, the Board may provide, in an order issued by the Board against such person, for the payment of civil charges for past violations in specific sums not to exceed the limit specified in § 62.1-270. Such civil charges shall be instead of any appropriate civil penalty which could be imposed under subsection A of § 62.1-270 and shall not be subject to the provisions of § 2.1-127.

§ 62.1-269. Enforcement by injunction, etc. - Any person violating or failing, neglecting or refusing to obey any rule,

regulation, order, standard or requirement of the Board pertaining to ground water, any provision of any ground water withdrawal permit issued by the Board, or any provision of this chapter may be compelled to obey same and to comply therewith in a proceeding instituted by the Board in any appropriate court for injunction, mandamus or other appropriate remedy. The Board shall be entitled to an award of reasonable attorneys' fees and costs in any action brought by the Board under this section in which it substantially prevails on the merits of the case, unless special circumstances would make an award unjust.

§ 62.1-270. Penalties. - A. Any person who violates any provision of this chapter, or who fails, neglects or refuses to comply with any order of the Board pertaining to ground water, or order of a court, issued as herein provided, shall be subject to a civil penalty not to exceed $25,000 for each violation within the discretion of the court. Each day of violation of each requirement shall constitute a separate offense.

Such civil penalties may, in the discretion of the court assessing them, be directed to be paid into the treasury of the county, city, or town in which the violation occurred to be used for the purpose of abating environmental pollution therein in such manner as the court may, by order, direct, except that where the person in violation is such county, city or town itself, or its agent, the court shall direct such penalty to be paid to the State Treasurer for deposit into the Virginia Environmental Emergency Response Fund pursuant to Chapter 25 of Title 10.1.

With the consent of any person in violation of this chapter, the Board may provide, in an order issued by the Board against the person, for the payment of civil charges. These charges shall be in lieu of the civil penalties referred to above. Such civil charges shall be deposited by the State Treasurer into the Virginia Environmental Emergency Response Fund.

B. Any person willfully or negligently violating any provision of this chapter, any regulation or order of the Board pertaining to ground water, any condition of a ground water withdrawal permit or any order of a court shall be guilty of a misdemeanor punishable by confinement in jail for not more than twelve months and a fine of not less than $2,500 nor more than $25,000, either or both. Any person who knowingly violates any provision of this chapter, any regulation or order of the Board pertaining to ground water, any condition of a ground water withdrawal permit or any order of a court issued as herein provided, or who knowingly makes any false statement in any form required to be submitted under this chapter shall be guilty of a felony punishable by a term of imprisonment of not less than one year nor more than three years, or in the discretion of the jury or the court trying the case without a jury, confinement in jail for not more than twelve months and a fine of not less than $5,000 nor more than $50,000 for each violation. Any defendant that is not an individual shall, upon conviction of a violation under this subsection, be sentenced to pay a fine of not less than $10,000. Each day of violation of each requirement shall constitute a separate offense.

C. Any person who knowingly violates any provision of this chapter, and who knows at that time that he thereby places another person in imminent danger of death or serious bodily harm, shall, upon conviction, be guilty of a felony punishable by a term of imprisonment of not less than two years nor more than fifteen years and a fine of not more than $250,000, either or both. A defendant that is not an individual shall, upon conviction of a violation under this subsection, be sentenced to pay a fine not exceeding the greater of one million dollars or an amount that is three times the economic benefit realized by the defendant as a result of the offense. The maximum penalty shall be doubled with respect to both fine and imprisonment for any subsequent conviction of the same person under this subsection.

D. Criminal prosecution under this section shall be commenced within three years of discovery of the offense, notwithstanding the limitations provided in any other statute.

ATTACHMENT T

1. Ground Water Withdrawal Regulations

Effective Date June 1, 1999

CHAPTER 610.

GROUND WATER WITHDRAWAL REGULATIONS.

PART I General.
PART II Declaration of Ground Water Management Areas.
PART III Permit Application and Issuance.
PART IV Special Exception Application and Issuance.
PART V Public Involvement.
PART VI Permit and Special Exception Amendment, Revocation and Denial.
PART VII Enforcement.
PART VIII Miscellaneous.

PART I.

General.

9 VAC 25-610-10. Definitions.
9 VAC 25-610-20. Purpose.
9 VAC 25-610-30. Authority for chapter.
9 VAC 25-610-40. Prohibitions and requirements for ground water withdrawals.
9 VAC 25-610-50. Exclusions.
9 VAC 25-610-60. Effect of a permit.

9 VAC 25-610-10. Definitions.

Unless a different meaning is required by the context, the following terms, as used in this chapter, shall have the following meanings.

"Act" means the Ground Water Management Act of 1992, Chapter 25 (§ 62.1-254 et seq.) of Title 62.1 of the Code of Virginia.

"Adverse impact" means reductions in ground water levels or changes in ground water quality that limit the ability of any existing ground water user lawfully withdrawing or authorized to withdraw ground water at the time of permit or special exception issuance to continue to withdraw the quantity and quality of ground water required by the existing use. Existing users include all those persons who have been granted a ground water withdrawal permit subject to this chapter and all other persons who are excluded from permit requirements by 9 VAC 25-610-50.

"Applicant" means a person filing an application to initiate or enlarge a ground water withdrawal in a ground water management area.

"Area of impact" means the areal extent of each aquifer where more than one foot of drawdown is predicted to occur due to a proposed withdrawal.

"Beneficial use" includes, but is not limited to domestic (including public water supply), agricultural, commercial, and industrial uses.

"Board" means the State Water Control Board.

"Consumptive use" means the withdrawal of ground water, without recycle of said waters to their source of origin.

"Department" means the Department of Environmental Quality.

"Draft permit" means a prepared document indicating the board's tentative decision relative to a permit action.

"Director" means the director of the Department of Environmental Quality.

"Geophysical investigation" means any hydrogeologic evaluation to define the hydrogeologic framework of an area or determine the hydrogeologic properties of any aquifer or confining unit to the extent that withdrawals associated with such investigations do not result in unmitigated adverse impacts to existing ground water users. Geophysical investigations include, but are not limited to, pump tests and aquifer tests.

"Ground water" means any water, except capillary moisture, beneath the land surface in the zone of saturation or beneath the bed of any stream, lake, reservoir or other body of surface water wholly or partially within the boundaries of this Commonwealth, whatever the subsurface geologic structure in which such water stands, flows, percolates or otherwise occurs.

"Historic prepumping water levels" means ground water levels in aquifers prior to the initiation of any ground water withdrawals. For the purpose of this chapter, in the Eastern Virginia and Eastern Shore Ground Water Management Areas, historic prepumping water levels are defined as water levels present in aquifers prior to 1890.

"Human consumptive use" means the withdrawal of ground water for private residential domestic use and that portion of ground water withdrawals in a public water supply system that support

residential domestic uses and domestic uses at commercial and industrial establishments.

"Mitigate" means to take actions necessary to assure that all existing ground water users at the time of issuance of a permit or special exception who experience adverse impacts continue to have access to the amount and quality of ground water needed for existing uses.

"Permit" means a Ground Water Withdrawal Permit issued by the board permitting the withdrawal of a specified quantity of ground water under specified conditions in a ground water management area.

"Permittee" means a person who currently has an effective Ground Water Withdrawal Permit issued by the board.

"Person" means any and all persons, including individuals, firms, partnerships, associations, public or private institutions, municipalities or political subdivisions, governmental agencies, or private or public corporations organized under the laws of this Commonwealth or any other state or country.

"Public hearing" means a fact finding proceeding held to afford interested persons an opportunity to submit factual data, views and comments to the board pursuant to the board's Procedural Rule No. 1.

"Salt water intrusion" means the encroachment of saline waters in any aquifer that create adverse impacts to existing ground water users or is counter to the public interest.

"Special exception" means a document issued by the board for withdrawal of ground water in unusual situations where requiring the user to obtain a ground water withdrawal permit would be contrary to the purpose of the Ground Water Management Act of 1992. Special exceptions allow the withdrawal of a specified quantity of ground water under specified conditions in a ground water management area.

"Surface and ground water conjunctive use system" means an integrated water supply system wherein surface water is the primary source and ground water is a supplemental source that is used to augment the surface water source when the surface water source is not able to produce the amount of water necessary to support the annual water demands of the system.

"Well" means any artificial opening or artificially altered natural opening, however made, by which ground water is sought or through which ground water flows under natural pressure or is intended to be withdrawn.

"Withdrawal system" means; (1) One or more wells or withdrawal points located on the same or contiguous properties under common ownership for which the withdrawal is applied to the same beneficial use, or (2) two or more connected wells or withdrawal points which are under common ownership but are not necessarily located on contiguous properties.

9 VAC 25-610-20. Purpose.

The Ground Water Management Act of 1992 recognizes and declares that the right to reasonable control of all ground water resources within the Commonwealth belongs to the public and that in order to conserve, protect and beneficially utilize the ground water resource and to ensure the public welfare, safety and health, provisions for management and control of ground water resources are essential. This chapter delineates the procedures and requirements to be followed when establishing Ground Water Management Areas and the issuance of Ground Water Withdrawal Permits by the board pursuant to the Ground Water Management Act of 1992.

9 VAC 25-610-30. Authority for chapter.

The authority for this chapter is the Ground Water Management Act of 1992, Chapter 25 (§ 62.1-254 et seq.) of Title 62.1 of the Code of Virginia, in particular § 62.1-256.8.

9 VAC 25-610-40. Prohibitions and requirements for ground water withdrawals.

A. No person shall withdraw, attempt to withdraw, or allow the withdrawal of ground water within a ground water management area, except as authorized pursuant to a ground water withdrawal permit, or as excluded in 9 VAC 25-610-50.

B. No permit or special exception shall be issued for more ground water than can be applied to the proposed beneficial use.

9 VAC 25-610-50. Exclusions.

The following do not require a ground water withdrawal permit:

1. Withdrawals of less than 300,000 gallons per month;

2. Withdrawals associated with temporary construction dewatering that do not exceed 24 months in duration;

3. Withdrawals associated with a state-approved ground water remediation that do not exceed 60 months in duration;

4. Withdrawals for use by a ground water source heat pump where the discharge is reinjected into the aquifer from which it was withdrawn;

5. Withdrawals from ponds recharged by ground water without mechanical assistance;

6. Withdrawals for the purpose of conducting geophysical investigations, including pump tests;

7. Withdrawals coincident with exploration for and extraction of coal or activities associated with coal mining regulated by the Department of Mines, Minerals, and Energy;

8. Withdrawals coincident with the exploration for or production of oil, gas or other minerals other than coal, unless such withdrawal adversely impacts aquifer quantity or quality or other ground water users within a ground water management area;

9. Withdrawals in any area not declared to be a ground water management area;

10. Withdrawal of ground water authorized pursuant to a special exception issued by the board; and

11. Withdrawal of ground water discharged from free flowing springs where the natural flow of the spring has not been increased by any method.

9 VAC 25-610-60. Effect of a permit.

A. Compliance with a ground water withdrawal permit constitutes compliance with the permit requirements of the Ground Water Management Act of 1992.

B. The issuance of a permit does not convey any property rights in either real or personal property, or any exclusive privileges, nor does it authorize injury to private property or any invasion of personal rights or any infringement of federal, state or local law or regulation.

PART II.

Declaration of Ground Water Management Areas.

9 VAC 25-610-70. Criteria for consideration of a ground water management area.
9 VAC 25-610-80. Declaration of ground water management areas.

9 VAC 25-610-70. Criteria for consideration of a ground water management area.

The board upon its own motion, or in its discretion, upon receipt of a petition by any county, city or town within the area in question, may initiate a ground water management area proceeding, whenever in its judgment there is reason to believe that any one of the four following conditions exist:

1. Ground water levels in the area are declining or are expected to decline excessively;

2. The wells of two or more ground water users within the area are interfering or may be reasonably expected to interfere substantially with one another;

3. The available ground water supply has been or may be overdrawn; or

4. The ground water in the area has been or may become polluted.

9 VAC 25-610-80. Declaration of ground water management areas.

A. If the board finds that any of the conditions listed in 9 VAC 25-610-70 exist, and further determines that the public welfare, safety and health require that regulatory efforts be initiated, the board shall declare the area in question a ground water management area, by regulation.

B. Such regulations shall be promulgated in accordance with the agency's Public Participation Guidelines (9 VAC 25-10-10 et seq.) and the Administrative Process Act (§ 9-6.14:1 et seq. of the Code of Virginia).

C. The regulation shall define the boundaries of the ground water management area, and identify the aquifers to be included in the ground water management area. Any number of aquifers that either wholly or partially overlie one another may be included within the same ground water management area.

D. After adoption the board shall mail a copy of the regulation to the mayor or chairman of the governing body of each county, city or town within which any part of the ground water management area lies.

PART III.

Permit Application and Issuance.

9 VAC 25-610-90.	Application for a permit.
9 VAC 25-610-100.	Water conservation and management plans.
9 VAC 25-610-110.	Criteria for issuance of permits.
9 VAC 25-610-120.	Public water supplies.
9 VAC 25-610-130.	Conditions applicable to all permits.
9 VAC 25-610-140.	Establishing applicable standards, limitations or other permit conditions.
9 VAC 25-610-150.	Signatory requirements.
9 VAC 25-610-160.	Draft permit.

9 VAC 25-610-90. Application for a permit.

A. Persons withdrawing ground water or who have rights to withdraw ground water prior to July 1, 1992, in the Eastern Virginia or Eastern Shore Ground Water Management Areas and not excluded from requirements of this chapter by 9 VAC 25-610-50 shall apply for a permit.

1. Any person who was issued a certificate of ground water right or a permit to withdraw ground water prior to July 1, 1991, and who was withdrawing ground water pursuant to said permit or certificate on July 1, 1992, shall file an application on or before December 31, 1992, to continue said withdrawal. The applicant shall demonstrate the claimed prior withdrawals through withdrawal reports required by the existing certificate or permit or by reports required by Water Withdrawal Reporting Regulations (9 VAC

25-200-10 et seq.).

2. Any person who was issued a certificate of ground water right or a permit to withdraw ground water prior to July 1, 1991, and who had not initiated the withdrawal prior to July 1, 1992, may initiate a withdrawal on or after July 1, 1992, pursuant to the terms and conditions of the certificate or permit and shall file an application for a ground water withdrawal permit on or before December 31, 1995, to continue said withdrawal. The applicant shall demonstrate the claimed prior withdrawals through withdrawal reports required by the existing certificate or permit or by reports required by Water Withdrawal Reporting Regulations (9 VAC 25-200-10 et seq.).

3. Any person who was issued a permit to withdraw ground water on or after July 1, 1991, and prior to July 1, 1992, shall not be required to apply for a ground water withdrawal permit until the expiration of the permit to withdraw ground water or 10 years from the date of issuance of the permit to withdraw ground water, whichever occurs first. Such persons shall reapply for a ground water withdrawal permit as described in 9 VAC 25-610-90 D.

4. Any person withdrawing ground water for agricultural or livestock watering purposes on or before July 1, 1992 shall file an application for a ground water withdrawal permit on or before December 31, 1993. The applicant shall demonstrate the claimed prior withdrawals by voluntary withdrawal reports required by Water Withdrawal Reporting Regulations (9 VAC 25-200-10 et seq.) when such reports have been filed with the board. When such reports are not available estimates of withdrawal will be accepted that are based on the area irrigated, depth of irrigation, and annual number of irrigations; pumping capacity and annual pumping time; annual energy consumption for pumps, energy consumption per hour, and pumping capacity; number and type of livestock watered annually; number and type of livestock where water is used for cooling purposes; or other methods approved by the board.

5. Any political subdivision, or authority serving a political subdivision, holding a certificate of ground water right or a permit to withdraw ground water issued prior to July 1, 1992, for the operation of a public water supply well for the purpose of providing supplemental water during drought conditions, shall file an application on or before December 31, 1992. Any political subdivision, or authority serving a political subdivision, shall submit, as part of the application, a water conservation and management plan as described in 9 VAC 25-610-100 B.

6. Any person who is required to apply in 9 VAC 25-610-90 A 1, 2, or 5 and who uses the certificated or permitted withdrawal to operate a public water supply system shall provide a copy of the waterworks operation permit, or equivalent, with the required application for a ground water withdrawal permit.

7. Any person described in 9 VAC 25-610-90 A 1, 2, 3, or 5 who files a complete application by the date required may continue to withdraw ground water pursuant to the existing certificate or permit until such time as the board takes action on the outstanding application for a ground water withdrawal permit.

8. Any person described in 9 VAC 25-610-90 A 4 who files a complete application by the date required may continue their existing withdrawal until such time as the board takes action on the outstanding application for a ground water withdrawal permit.

9. Any person described in 9 VAC 25-610-90 A 1, 2, 3, 4, or 5 who files an incomplete application by the date required may continue to withdraw ground water as described in 9 VAC 25-610-90 A 7 and 9 VAC 25-610-90 A 8 provided that all information required to complete the application is provided to the board within 60 days of the board's notice to the applicant of deficiencies. Should such persons not provide the board the required information within 60 days, they shall cease withdrawals until they provide any additional information to the board and the board concurs that the application is complete.

10. A complete application for those persons described in 9 VAC 25-610-90 A 1, 2, 3, 4, or 5 shall contain:

a. A ground water withdrawal permit application completed in its entirety. Application forms shall be submitted in a format specified by the board. Such application forms are available from the Department of Environmental Quality;

b. Well construction documentation for all wells associated with the application;

c. Locations of all wells associated with the application shown on United States Geological Survey 7 1/2 minute topographic maps or copies of such maps;

d. Withdrawal reports required by the existing certificate or permit, reports required by Water Withdrawal Reporting Regulations (9 VAC 25-200-10 et seq.), or estimates of withdrawals as described in 9 VAC 25-610-90 A 4 to support any

claimed prior withdrawal;

e. A copy of the Virginia Department of Health waterworks operation permit, or equivalent, where applicable;

f. Persons described in 9 VAC 25-610-90 A 5 shall submit a water conservation and management plan as described in 9 VAC 25-610-100;

g. The application shall have an original signature as described in 9 VAC 25-610-150.

11. Any person described in 9 VAC 25-610-90 A 1, 2, 3, or 5 who fails to file an application by the date required creates the presumption that all claims to ground water withdrawal based on historic use have been abandoned. Should any such person wish to rebut the presumption that claims to ground water withdrawal based on historic use have been abandoned, they shall have filed an application with a letter of explanation to the board by November 21, 1993. Any such person failing to rebut the presumption that claims to ground water withdrawal based on historic use have been abandoned who wishes to withdraw ground water, shall apply for a new withdrawal as described in 9 VAC 25-610-90 C.

12. Any person described in 9 VAC 25-610-90 A 4 who fails to file an application by the date required creates the presumption that all claims to ground water withdrawal based on historic use have been abandoned. Should any such person wish to rebut the presumption that claims to ground water withdrawal based on historic use have been abandoned, they may do so by filing an application with a letter of explanation to the board within 60 days of the original required date or within 60 days of the effective date of this chapter, whichever is later. Any such person failing to rebut the presumption that claims to ground water withdrawal based on historic use have been abandoned who wishes to withdraw ground water, shall apply for a new withdrawal as described in 9 VAC 25-610-90 C.

B. Persons withdrawing ground water when a ground water management area is declared or expanded after July 1, 1992, and not excluded from requirements of this chapter by 9 VAC 25-610-50 shall apply for a permit.

1. Any person withdrawing ground water in an area that is declared to be a ground water management area after July 1, 1992, shall file an application for a ground water within six months of the effective date of the regulation creating or expanding the

ground water management area. The applicant shall demonstrate the claimed prior withdrawals through withdrawal reports required by Water Withdrawal Reporting Regulations (9 VAC 25-200-10 et seq.). In the case of agricultural ground water withdrawals not required to report by Water Withdrawal Reporting Regulations, estimates of withdrawal will be accepted that are based on the area irrigated, depth of irrigation, and annual number of irrigations; pumping capacity and annual pumping time; annual energy consumption for pumps, energy consumption per hour, and pumping capacity; number and type of livestock watered annually; number and type of livestock where water is used for cooling purposes; or other methods approved by the board.

2. Any person withdrawing ground water who uses the withdrawal to operate a public water supply system shall provide a copy of the waterworks operation permit, or equivalent, with the required application for a ground water withdrawal permit.

3. Any person who is required to apply for a ground water withdrawal permit and files a complete application within six months after the effective date of the regulation creating or expanding a ground water management area may continue their withdrawal until such time as the board takes action on the outstanding application for a ground water withdrawal permit.

4. Any person who is required to apply for a ground water withdrawal permit and files an incomplete application within six months after the effective date of the regulation creating or expanding a ground water management area may continue to withdraw ground water as described in 9 VAC 25-610-90 B 3 provided that all the information required to complete the application is provided to the board within 60 days of the board's notice to the applicant of deficiencies. Should such persons not provide the board the required information within 60 days, they shall cease withdrawals until they provide any additional information to the board and the board concurs that the application is complete.

5. A complete application for those persons described in 9 VAC 25-610-90 B 1 shall contain:

a. A ground water withdrawal permit application completed in its entirety. Application forms shall be submitted in a format specified by the board. Such application forms are available from the Department of Environmental Quality;

b. Well construction documentation for all wells associated with the application;

c. Locations of all wells associated with the application shown on United States Geological Survey 7 1/2 minute topographic maps or copies of such maps;

d. Withdrawal reports required by Water Withdrawal Reporting Regulations (9 VAC 25-200-10 et seq.) or estimates of withdrawals as described in 9 VAC 25-610-90 B 1 to support any claimed prior withdrawal;

e. A copy of the Virginia Department of Health waterworks operation permit, where applicable; and

f. The application shall have an original signature as described in 9 VAC 25-610-150.

6. Any person who fails to file an application within six months after the effective date creating or expanding a ground water management area creates the presumption that all claims to ground water withdrawal based on historic use have been abandoned. Should any such person wish to rebut the presumption that claims to ground water withdrawal based on historic use have been abandoned, they may do so by filing an application with a letter of explanation to the board within eight months after the date creating or expanding the ground water management area. Any such person failing to rebut the presumption that claims to ground water withdrawal based on historic use have been abandoned who wishes to withdraw ground water shall apply for a new withdrawal as described in 9 VAC 25-610-90 C.

C. Persons wishing to initiate a new withdrawal or expand an existing withdrawal in any ground water management area and not excluded from requirements of this chapter by 9 VAC 25-610-50 shall apply for a permit.

1. A ground water withdrawal permit application shall be completed and submitted to the board and a ground water withdrawal permit issued by the board prior to the initiation of any withdrawal not specifically excluded in 9 VAC 25-610-50.

2. A complete ground water withdrawal permit application for a new or expanded withdrawal, at a minimum, shall contain the following:

a. A ground water withdrawal permit application completed in its entirety with all maps, attachments, and addenda that may be required;

Chapter 22 (§15.2-2200 et seq.) of Title 15.2

b. The application shall include notification from the local governing body of the county, city or town in which the withdrawal is to occur that the location and operation of the withdrawing facility is in compliance with all ordinances adopted pursuant to Chapter 11 (§ 15.1-427 et seq.) of Title 15.1 of the Code of Virginia. If the governing body of any county, city or town fails to respond within 45 days following receipt of a written request by certified mail, return receipt requested, by an applicant for certification that the location and operation of the proposed facility is consistent with all ordinances adopted pursuant to Chapter 11 (§ 15.1-427 et seq.) of Title 15.1, the location and operation of the proposed facility shall be deemed to comply with the provisions of such ordinances for the purposes of this chapter;

c. The application shall have an original signature as described in 9 VAC 25-610-150;

d. The application shall include locations of all wells associated with the application shown on United States Geological Survey 7 1/2 minute topographic maps or copies of such maps and a detailed location map of each existing and proposed well. The detailed location map shall be of sufficient detail such that all wells may be easily located for site inspection;

e. A completed well construction report for all existing wells associated with the application. Well construction report forms will be in a format specified by the board and are available from the Department of Environmental Quality;

f. An evaluation of the lowest quality water needed for the intended beneficial use;

g. An evaluation of sources of water supply, other than ground water, including sources of reclaimed water; and

h. A water conservation and management plan as described in 9 VAC 25-610-100.

3. In addition to requirements contained in 9 VAC 25-610-90 C 2, the board may require any or all of the following information prior to considering an application complete.

a. A plan to mitigate potential adverse impacts due to the proposed withdrawal on existing ground water users.

b. The installation of monitoring wells and the

collection and analysis of drill cuttings, continuous cores, geophysical logs, water quality samples or other hydrogeologic information necessary to characterize the aquifer system present at the proposed withdrawal site.

c. The completion of pump tests or aquifer tests to determine aquifer characteristics at the proposed withdrawal site.

d. Other information that the board believes is necessary to evaluate the application.

D. Duty to reapply.

1. Any permittee with an effective permit shall submit a new permit application at least 270 days before the expiration date of an effective permit unless permission for a later date has been granted by the board.

2. Permittees who have effective permits shall submit a new application 270 days prior to any proposed modification to their activity which will:

a. Result in an increase of withdrawals above permitted limits; and

b. Violate or lead to the violation of the terms and conditions of the permit.

3. The applicant shall provide all information described in 9 VAC 25-610-90 C 1 and 2 and may be required to provide any information described in 9 VAC 25-610-90 C 3 for any reapplication.

E. Where the board considers an application incomplete under the requirements of 9 VAC 25-610-90, the board may require the submission of additional information after an application has been filed, and may suspend processing of any application until such time as the applicant has supplied missing or deficient information and the board considers the application complete. Further, where the applicant becomes aware that he omitted one or more relevant facts from a permit application, or submitted incorrect information in a permit application or in any report to the board, he shall immediately submit such facts or the correct information.

F. When an application does not accurately describe an existing or proposed ground water withdrawal system, the board may require the applicant to amend the existing application, submit a new application, or submit new applications before the application

will be processed.

G. All persons required by this chapter to apply for ground water withdrawal permits shall submit application forms in a format specified by the board. Such application forms are available from the Department of Environmental Quality.

H. No ground water withdrawal permit application shall be considered complete until a permit fee is submitted as required by the Permit Fee Regulations (9 VAC 25-20-10 et seq.).

9 VAC 25-610-100. Water conservation and management plans.

A. Any application to initiate a new withdrawal or expand an existing withdrawal in any ground water management area or the reapplication at the end of a permit cycle for all permits shall require a water conservation and management plan before the application or reapplication is considered complete.

B. A water conservation and management plan shall include:

1. Requirements for the use of water saving plumbing and processes including, where appropriate, the use of water saving fixtures in new and renovated plumbing as provided in the Uniform Statewide Building Code;

2. A water loss reduction program;

3. A water use education program;

4. An evaluation of potential water reuse options; and

5. Requirements for mandatory water use reductions during water shortage emergencies declared by the local governing body or director including, where appropriate, ordinances prohibiting the waste of water generally and requirements providing for mandatory water use restrictions, with penalties, during water shortage emergencies.

C. The board shall review all water conservation and management plans and assure that such plans contain all elements required in 9 VAC 25-610-100 B. The board shall approve all plans that:

1. Contain requirements that water saving fixtures be used in all new and renovated plumbing as provided in the Uniform Statewide

Building Code;

2. Contain requirements for making technological, procedural, or programmatic improvements to the applicant's facilities and processes to decrease water consumption. These requirements shall assure that the most efficient use is made of ground water;

3. Contain requirements for an audit of the total amount of ground water used in the applicant's distribution system and operational processes during the first two years of the permit cycle. Subsequent implementation of a leak detection and repair program will be required within one year of the completion of the audit, when such a program is technologically feasible;

4. Contain requirements for the education of water users and employees controlling water consuming processes to assure that water conservation principles are well known by the users of the resource;

5. Contain an evaluation of potential water reuse options and assurances that water will be reused in all instances where reuse is feasible;

6. Contain requirements for mandatory water use restrictions during water shortage emergencies that prohibit all nonessential uses such as lawn watering, car washing, and similar nonessential residential, industrial and commercial uses for the duration of the water shortage emergency; and

7. Contain penalties for failure to comply with mandatory water use restrictions.

9 VAC 25-610-110. Criteria for issuance of permits.

A. The board shall not issue any permit for more ground water than will be applied to the proposed beneficial use.

B. The board shall issue ground water withdrawal permits to persons withdrawing ground water or who have rights to withdraw ground water prior to July 1, 1992, in the Eastern Virginia or Eastern Shore Ground Water Management Areas and not excluded from requirements of this chapter by 9 VAC 25-610-50 based on the following criteria:

1. The board shall issue a ground water withdrawal permit for persons meeting the criteria of 9 VAC 25-610-90 A 1 for the total

amount of ground water withdrawn in any consecutive 12-month period between July 1, 1987, and June 30, 1992; however with respect to a political subdivision, an authority serving a political subdivision or a community waterworks regulated by the Department of Health, the board shall issue a ground water withdrawal permit for the total amount of water withdrawn in any consecutive 12-month period between July 1, 1980 and June 30, 1992.

2. The board shall issue a ground water withdrawal permit for persons meeting the criteria of 9 VAC 25-610-90 A 2 for the total amount of ground water withdrawn and applied to a beneficial use in any consecutive 12-month period between July 1, 1992, and June 30, 1995.

3. The board shall issue a ground water withdrawal permit for persons meeting the criteria of 9 VAC 25-610-90 A 4 for the total amount of ground water withdrawn in any consecutive twelve month period between July 1, 1983 and June 30, 1993. The board shall evaluate all estimates of ground water withdrawal based on projected water demands for crops and livestock as published by the Virginia Cooperative Extension Service, the United States Natural Resources Conservation Service, or other similar references and make a determination whether they are reasonable. In all cases only reasonable estimates will be used to document a permit limit.

4. The board shall issue a ground water withdrawal permit for persons meeting the criteria of 9 VAC 25-610-90 A 5 for the amount of ground water withdrawal needed to annually meet human consumption needs as proven in the water conservation and management plan approved by the board. The board shall include conditions in such permits that require the implementation of mandatory use restrictions before such withdrawals can be exercised.

5. When requested by persons described in 9 VAC 25-610-90 A 1, 2 and 4 the board shall issue ground water withdrawal permits that include withdrawal amounts in excess of those which an applicant can support based on historic usage. These additional amounts shall be based on water savings achieved through water conservation measures. The applicant shall demonstrate withdrawals prior to implementation of water conservation measures, type of water conservation measure implemented, and withdrawals after implementation of water conservation measures. The applicant shall provide evidence of withdrawal amounts through metered withdrawals and estimated amounts shall not be accepted to claim additional withdrawal amounts due to water conservation. Decreases in withdrawal amounts due to production declines, climatic conditions,

population declines, or similar events shall not be used as a basis to claim additional withdrawal amounts based on water conservation.

C. The board shall issue ground water withdrawal permits to persons withdrawing ground water when a ground water management area is declared or expanded after July 1, 1992, and not excluded from requirements of this chapter by 9 VAC 25-610-50 based on the following criteria:

1. The board shall issue a ground water withdrawal permit to nonagricultural users for the total amount of ground water withdrawn in any consecutive 12-month period during the five years preceding the effective date of the regulation creating or expanding the ground water management area.

2. The board shall issue a ground water withdrawal permit to agricultural users for the total amount of ground water withdrawn in any consecutive twelve month period during the ten years preceding the effective date of the regulation creating or expanding the ground water management area. The board shall evaluate all estimates of ground water withdrawal based on projected water demands for crops and livestock as published by the Virginia Cooperative Extension Service, the United States Natural Resources Conservation Service, or other similar references and make a determination whether they are reasonable. In all cases only reasonable estimates will be used to document a permit limit.

3. When requested by the applicant the board shall issue ground water withdrawal permits that include withdrawal amounts in excess of those which an applicant can support based on historic usage. These additional amounts shall be based on water savings achieved through water conservation measures. The applicant shall demonstrate withdrawals prior to implementation of water conservation measures, type of water conservation measure implemented, and withdrawals after implementation of water conservation measures. The applicant shall provide evidence of withdrawal amounts through metered withdrawals and estimated amounts shall not be accepted to claim additional withdrawal amounts due to water conservation. Decreases in withdrawal amounts due to production declines, climatic conditions, population declines, or similar events shall not be used as a basis to claim additional withdrawal amounts based on water conservation.

D. The board shall issue ground water withdrawal permits to persons wishing to initiate a new withdrawal or expand an existing withdrawal in any ground water management area who have submitted complete applications and are not excluded from requirements of

this chapter by 9 VAC 25-610-50 based on the following criteria:

1. The applicant shall provide all information required in 9 VAC 25-610-90 C 2 prior to the board's determination that an application is complete. The board may require the applicant to provide any information contained in 9 VAC 25-610-90 C 3 prior to considering an application complete based on the anticipated impact of the proposed withdrawal on existing ground water users or the ground water resource.

2. The board shall perform a technical evaluation to determine the areas of any aquifers that will experience at least one foot of water level declines due to the proposed withdrawal and may evaluate the potential for the proposed withdrawal to cause salt water intrusion into any portions of any aquifers or the movement of waters of lower quality to areas where such movement would result in adverse impacts on existing ground water users or the ground water resource. Prior to public notice of a draft permit developed in accordance with the findings of the technical evaluation, and at the request of the applicant, the results of the technical evaluation, including all assumptions and input, will be provided to the applicant for review.

3. The board shall issue a ground water withdrawal permit when it is demonstrated, by a complete application and the board's technical evaluation, to the board's satisfaction that the maximum safe supply of ground water will be preserved and protected for all other beneficial uses and that the applicant's proposed withdrawal will have no significant unmitigated impact on existing ground water users or the ground-water resource. In order to assure that the applicant's proposed withdrawal complies with the above stated requirements, the demonstration shall include, but not be limited to, compliance with the following criteria:

a. The applicant demonstrates that no other sources of water supply, including reclaimed water, are viable.

b. The applicant demonstrates that the ground water withdrawal will originate from the aquifer that contains the lowest quality water that will support the proposed beneficial use.

c. The applicant demonstrates that no pumps or water intake devices are placed below the top of the uppermost confined aquifer that a well utilizes as a ground water source or below the bottom of an unconfined aquifer that a well utilizes as a ground water source.

d. The applicant demonstrates that the amount of ground water withdrawal requested is the smallest amount of withdrawal necessary to support the proposed beneficial use and that the amount is representative of the amount necessary to support similar beneficial uses when adequate conservation measures are employed.

e. The applicant provides a water conservation and management plan as described in 9 VAC 25-610-100 and implements the plan as an enforceable condition of the ground water withdrawal permit.

f. The applicant provides certification by the local governing body that the location and operation of the withdrawing facility is in compliance with all ordinances adopted pursuant to Chapter 11 (§ 15.1-427 et seq.) of Title 15.1 of the Code of Virginia.

g. The board's technical evaluation demonstrates that the area of impact of the proposed withdrawal will remain on property owned by the applicant or that there are no existing ground water withdrawers within the area of impact of the proposed withdrawal.

In cases where the area of impact does not remain on the property owned by the applicant or existing ground water withdrawers will be included in the area of impact, the applicant shall provide and implement a plan to mitigate all adverse impacts on existing ground water users. Approvable mitigation plans shall, at a minimum, contain the following features and implementation of the mitigation plan shall be included as enforceable permit conditions:

(1) The rebuttable presumption that water level declines that cause adverse impacts to existing wells within the area of impact are due to the proposed withdrawal;

(2) A commitment by the applicant to mitigate undisputed adverse impacts due to the proposed withdrawal in a timely fashion;

(3) A speedy, nonexclusive, low-cost process to fairly resolve disputed claims for mitigation between the applicant and any claimant; and

(4) The requirement that the claimant provide documentation that he is the owner of the well; documentation that the well was constructed and operated prior to the initiation of the applicant's withdrawal; the depth of the well, the pump, and

screens and any other construction information that the claimant possesses; the location of the well with enough specificity that it can be located in the field; the historic yield of the well, if available; historic water levels for the well, if available; and the reasons the claimant believes that the applicant's withdrawals have caused an adverse impact on the well.

h. The board's technical evaluation demonstrates that the proposed withdrawal in combination with all existing lawful withdrawals will not lower water levels, in any confined aquifer that the withdrawal impacts, below a point that represents 80% of the distance between the historical prepumping water levels in the aquifer and the top of the aquifer. Compliance with the 80% drawdown criterion will be determined at the points that are halfway between the proposed withdrawal site and the predicted one foot drawdown contour based on the predicted stabilized effects of the proposed withdrawal.

i. The board's technical evaluation demonstrates that the proposed ground water withdrawal will not result in salt water intrusion or the movement of waters of lower quality to areas where such movement would result in adverse impacts on existing ground water users or the ground water resource. This provision shall not exclude the withdrawal of brackish water so long as the proposed withdrawal will not result in unmitigated adverse impacts.

4. The board may also take the following factors into consideration when evaluating a ground water withdrawal permit application or special conditions associated with a ground water withdrawal permit:

a. The nature of the use of the proposed withdrawal;

b. The proposed use of innovative approaches such as aquifer storage and recovery systems, surface and ground water conjunctive use systems, multiple well systems that blend withdrawals from aquifers that contain different quality ground water in order to produce potable water, and desalinization of brackish ground water;

c. Climatic cycles;

d. Economic cycles;

e. The unique requirements of nuclear power stations;

f. Population and water demand projections during the

term of the proposed permit;

g. The status of land use and other necessary approvals; and

h. Other factors that the board deems appropriate.

E. When proposed uses of ground water are in conflict or available supplies of ground water are not sufficient to support all those who desire to use them, the board shall prioritize the evaluation of applications in the following manner:

1. Applications for human consumptive use shall be given the highest priority;

2. Should there be conflicts between applications for human consumptive uses, applications will be evaluated in order based on the date that said applications were considered complete; and

3. Applications for all uses, other than human consumption, will be evaluated following the evaluation of proposed human consumptive uses in order based on the date that said applications were considered complete.

F. Criteria for reissuance of permits.

1. The board shall consider all criteria for reissuance of a ground water withdrawal permit described in 9 VAC 25-610-110.D. Existing permitted withdrawal amounts shall not be the sole basis for determination of the appropriate withdrawal amounts when a permit is reissued.

2. The board shall reissue a permit to any public water supply user for an annual amount no less than the amount equal to that portion of the permitted withdrawal that was used by said system to support human consumptive uses during 12 consecutive months of the previous term of the permit.

9 VAC 25-610-120. Public water supplies.

The board shall evaluate all applications for ground water withdrawals for public water supplies as described in 9 VAC 25-610-110. The board shall make a preliminary decision on the application and prepare a draft ground water withdrawal permit and forward the draft permit to the Virginia Department of Health. The board shall not issue a final ground water withdrawal permit until such time as the Virginia Department of Health issues a waterworks

operation permit, or equivalent. The board shall establish withdrawal limits for such permits as described in 9 VAC 25-610-140 A 3 and 4. Under the Virginia Department of Health's Waterworks Regulation any proposed use of reclaimed, reused, or recycled water contained in a ground water withdrawal application to support a public water supply is required to be approved by the Virginia Department of Health.

9 VAC 25-610-130. Conditions applicable to all permits.

A. Duty to comply. The permittee shall comply with all conditions of the permit. Nothing in this chapter shall be construed to relieve the Ground Water Withdrawal Permit holder of the duty to comply with all applicable federal and state statutes and regulations. At a minimum, a person must obtain a well construction permit or a well site approval letter from the Virginia Department of Health prior to the construction of any well. Any permit noncompliance is a violation of the Act and law, and is grounds for enforcement action, permit termination, revocation, amendment, or denial of a permit renewal application.

B. Duty to cease or confine activity. It shall not be a defense for a permittee in an enforcement action that it would have been necessary to halt or reduce the activity for which a permit has been granted in order to maintain compliance with the conditions of the permit.

C. Duty to mitigate. The permittee shall take all reasonable steps to:

1. Avoid all adverse impacts to lawful ground water users which could result from the withdrawal; and

2. Where impacts cannot be avoided, provide mitigation of the adverse impact as described in 9 VAC 25-610-110 D 3 g.

D. Inspection and entry. Upon presentation of credentials, any duly authorized agent of the board or department may, at reasonable times and under reasonable circumstances:

1. Enter upon any permittee's property, public or private, and have access to, inspect and copy any records that must be kept as part of the permit conditions;

2. Inspect any facilities, operations or practices (including monitoring and control equipment) regulated or required under the

permit; and

3. Sample or monitor any substance, parameter or activity for the purpose of assuring compliance with the conditions of the permit or as otherwise authorized by law.

E. Duty to provide information. The permittee shall furnish to the board, within a reasonable time, any information which the board may request to determine whether cause exists for amending or revoking the permit, or to determine compliance with the permit. The permittee shall also furnish to the board, upon request, copies of records required to be kept by the permittee.

F. Monitoring and records requirements.

1. Monitoring shall be conducted according to approved analytical methods as specified in the permit.

2. Samples and measurements taken for the purpose of monitoring shall be representative of the monitored activity.

3. The permittee shall retain records of all monitoring information, including all calibration and maintenance records and all original strip chart or electronic recordings for continuous monitoring instrumentation, copies of all reports required by the permit, and records of all data used to complete the application for the permit, for a period of at least three years from the date of the expiration of a granted permit. This period may be extended by request of the board at any time.

4. Records of monitoring information shall include:

a. The date, exact place and time of sampling or measurements;

b. The name of the individuals who performed the sampling or measurements;

c. The date the analyses were performed;

d. The name of the individuals who performed the analyses;

e. The analytical techniques or methods supporting the information such as observations, readings, calculations and bench data used; and

f. The results of such analyses.

G. Permit action.

1. A permit may be amended or revoked as set forth in Part VI of this chapter.

2. If a permittee files a request for permit amendment or revocation, or files a notification of planned changes, or anticipated noncompliance, the permit terms and conditions shall remain effective until the request is acted upon by the board. This provision shall not be used to extend the expiration date of the effective permit.

3. Permits may be amended or revoked upon the request of the permittee, or upon board initiative, to reflect the requirements of any changes in the statutes or regulations.

9 VAC 25-610-140. Establishing applicable standards, limitations or other permit conditions.

A. In addition to the conditions established in 9 VAC 25-610-100, 9 VAC 25-610-110, 9 VAC 25-610-120 and 9 VAC 25-610-130 of this chapter, each permit shall include conditions with the following requirements:

1. A permit shall contain the total depth of each permitted well in feet;

2. A permit shall contain the designation of the aquifers to be utilized;

3. A permit shall contain conditions limiting the withdrawal amount of a single well or a group of wells that comprise a withdrawal system to a quantity specified by the board. A permit shall contain a maximum annual withdrawal limit;

4. A ground water withdrawal permit for a public water supply shall contain a condition allowing daily withdrawals at a level consistent with the requirements and conditions contained in the waterworks operation permit, or equivalent, issued by the Virginia Department of Health. This requirement shall not limit the authority of the board to reduce or eliminate ground water withdrawals by public water suppliers if necessary to protect human health or the environment;

5. The permittee shall not place a pump or water intake device lower than the top of the uppermost confined aquifer that a well utilizes as a ground water source or lower than the bottom of an

unconfined aquifer that a well utilizes as a ground water source;

6. All permits shall specify monitoring requirements as conditions of the permit.

a. Permitted users who are issued ground water withdrawal permits based on 9 VAC 25-610-110 B 3 and 9 VAC 25-610-110 C 2 shall install either in-line totalizing flow meters or hour meters that record the hours of operation of withdrawal pumps on each permitted well prior to beginning the permitted use. Flow meters shall produce volume determinations within plus or minus 10% of actual flows. Hour meters shall produce run times within plus or minus 10% of actual run times. Hour meter readings will be multiplied by the maximum capacity of the withdrawal pump to determine withdrawal amounts. A defective meter or other device must be repaired or replaced within 30 days. A defective meter is not grounds for not reporting withdrawals. During any period when a meter is defective, generally accepted engineering methods shall be used to estimate withdrawals and the period during which the meter was defective must be clearly identified in ground water withdrawal reports. An alternative method for determining flow may be approved by the board on a case-by-case basis.

b. Permitted users who are issued ground water withdrawal permits based on any section of this chapter not included in 9 VAC 25-610-140 A 6 a shall install in-line totalizing flow meters to read gallons, cubic feet or cubic meters on each permitted well prior to beginning the permitted use. Such meters shall produce volume determinations within plus or minus 10% of actual flows. A defective meter or other device must be repaired or replaced within 30 days. A defective meter is not grounds for not reporting withdrawals. During any period when a meter is defective, generally accepted engineering methods shall be used to estimate withdrawals and the period during which the meter was defective must be clearly identified in ground water withdrawal reports. An alternative method for determining flow may be approved by the board on a case-by-case basis.

c. Permits shall contain requirements concerning the proper use, maintenance and installation, when appropriate, of monitoring equipment or methods when required as a condition of the permit.

d. Permits shall contain required monitoring including type, intervals, and frequency sufficient to yield data which are representative of the monitored activity and including, when appropriate, continuous monitoring and sampling.

e. Each permitted well shall be equipped in a manner such that water levels can be measured during pumping and nonpumping periods without dismantling any equipment. Any opening for tape measurement of water levels shall have an inside diameter of at least 0.5 inches and be sealed by a removable plug or cap. The permittee shall provide a tap for taking raw water samples from each permitted well.

7. All permits shall include requirements to report the amount of water withdrawn from each permitted well and well system on forms provided by the board with a frequency dependent on the nature and effect of the withdrawal, but in no case less than once per year.

8. Ground water withdrawal permits issued under this chapter shall have an effective and expiration date which will determine the life of the permit. Ground water withdrawal permits shall be shall be effective for a fixed term not to exceed 10 years. Permit duration of less than the maximum period of time may be recommended in areas where hydrologic conditions are changing or are not adequately known. The term of any permit shall not be extended by amendment beyond the maximum duration. Extension of permits for the same activity beyond the maximum duration specified in the original permit will require reapplication and issuance of a new permit.

9. Each permit shall have a condition allowing the reopening of the permit for the purpose of amending the conditions of the permit to meet new regulatory standards duly adopted by the board. Cause for reopening permits include but is not limited to a determination that the circumstances under which the previous permit was based have materially and substantially changed, or special studies conducted by the board or the permittee show material and substantial change, since the time the permit was issued and thereby constitute cause for permit amendment or revocation.

10. Each well that is included in a ground water withdrawal permit shall have affixed to the well casing, in a prominent place, a permanent well identification plate that records the Department of Environmental Quality well identification number, the ground water withdrawal permit number, the total depth of the well and the screened intervals in the well, at a minimum. Such well identification plates shall be in a format specified by the board and are available from the Department of Environmental Quality.

B. In addition to the conditions established in 9 VAC

25-610-100, 9 VAC 25-610-110, 9 VAC 25-610-120, 9 VAC 25-610-130, and 9 VAC 25-610-140 A, each permit may include conditions with the following requirements where applicable:

1. A withdrawal limit may be placed on all or some of the wells which constitute a withdrawal system;

2. A permit may contain quarterly, monthly, or daily withdrawal limits or withdrawal limits based on any other frequency as determined by the board;

3. A permit may contain conditions requiring water quality and water levels monitoring at specified intervals in any wells deemed appropriate by the board;

4. A permit may contain conditions specifying water quality action levels in pumping and observation/monitoring wells to protect against or mitigate water quality degradation. The board may require permitted users to initiate control measures which include, but are not limited to, the following:

a. Pumping arrangements to reduce ground water withdrawal in areas of concentrated pumping;

b. Location of wells to eliminate or reduce ground water withdrawals near saltwater-freshwater interfaces;

c. Requirement of selective withdrawal from other available aquifers than those presently used;

d. Selective curtailment, reduction or cessation of ground water withdrawals to protect the public welfare, safety or health or to protect the resource;

e. Conjunctive use of freshwater and saltwater aquifers, or waters of less desirable quality where water quality of a specific character is not essential;

f. Construction and use of observation or monitoring wells, drilled into aquifers between areas of ground water withdrawal (or proposed areas of ground water withdrawal) and sources of lower quality water including saltwater;

g. Prohibiting the hydraulic connection of aquifers that contain different quality waters that could result in deterioration of water quality in an aquifer; and

h. Such other necessary control or abatement techniques as are technically feasible.

5. A permit may contain conditions limiting water level declines in pumping wells and observation wells; and

6. All permits may include requirements to report water quality and water level information on forms provided by the board with a frequency dependent on the nature and effect of the withdrawal, but in no case less than once per year.

C. In addition to conditions described in 9 VAC 25-610-130 and 9 VAC 25-610-140 A and B the board may issue any permit with any terms, conditions and limitations necessary to protect the public welfare, safety and health.

9 VAC 25-610-150. Signatory requirements.

Any application, report, or certification shall be signed as follows:

1. Application.

a. For a corporation: by a responsible corporate official. For purposes of this section, a responsible corporate official means (i) a president, secretary, treasurer, or vice president of the corporation in charge of a principal business function, or any other person who performs similar policy or decision-making functions for the corporation, or (ii) the manager of one or more manufacturing, production, or operating facilities employing more than 250 persons or having gross annual sales or expenditures exceeding $25,000,000 (in second-quarter 1980 dollars), if authority to sign documents has been assigned or delegated to the manager in accordance with corporate procedures.

b. For a municipality, state, federal or other public agency by either a principal executive officer or ranking elected official. (A principal executive officer of a federal, municipal, or state agency includes the chief executive officer of the agency or head executive officer having responsibility for the overall operation of a principal geographic unit of the agency).

c. For a partnership or sole proprietorship, by a general partner or proprietor respectively.

d. Any application for a permit under this chapter must

bear the signatures of the responsible party and any agent acting on the responsible party's behalf.

2. Reports. All reports required by permits and other information requested by the board shall be signed by:

a. One of the persons described in subdivision 1 a, b or c of this section; or

b. A duly authorized representative of that person. A person is a duly authorized representative only if:

(1) The authorization is made in writing to the board by a person described in subdivision 1 a, b, or c of this section; and

(2) The authorization specifies either an individual or a position having responsibility for the overall operation of the regulated withdrawal facility or activity, such as the position of plant manager, superintendent, or position of equivalent responsibility. A duly authorized representative may thus be either a named individual or any individual occupying a named position.

(3) If an authorization is no longer accurate because a different individual or position has responsibility for the overall operation of the facility, a new authorization must be submitted to the board prior to or together with any separate information, or applications to be signed by an authorized representative.

3. Certification of application and reports. Any person signing a document under subdivision 1 or 2 of this section shall make the following certification: I certify that this document and all attachments were prepared under my direction or supervision in accordance with a system designed to assure that qualified personnel properly gather and evaluate the information submitted. Based on my inquiry of the person or persons who manage the system or those persons directly responsible for gathering the information, the information submitted is to the best of my knowledge and belief true, accurate, and complete. I am aware that there are significant penalties for submitting false information including the possibility of fine and imprisonment for knowing violations.

A. Upon receipt of a complete application for a new or expanded withdrawal or a complete application to amend an existing withdrawal, the board shall make a tentative decision to issue or deny the application. If a tentative decision is to issue the permit then a draft permit shall be prepared in advance of public notice. The following tentative determinations shall be incorporated into a draft permit:

1. Conditions, withdrawal limitations, standards and other requirements applicable to the permit;

2. Monitoring and reporting requirements;

3. Requirements for mitigation of adverse impacts; and

4. Requirements for a water conservation and management plan.

B. If the tentative decision is to deny the application, the board shall do so in accordance with 9 VAC 25-610-340.

PART IV.

Special Exception Application and Issuance.

9 VAC 25-610-170.	Application for a special exception.
9 VAC 25-610-180.	Water conservation and management plans.
9 VAC 25-610-190.	Criteria for the issuance of special exceptions.
9 VAC 25-610-200.	Public water supplies.
9 VAC 25-610-210.	Conditions applicable to all special exceptions.
9 VAC 25-610-220.	Establishing applicable standards, limitations or other special exception conditions.
9 VAC 25-610-230.	Signatory requirements.
9 VAC 25-610-240.	Draft special exception.

9 VAC 25-610-170. Application for a special exception.

A. Any person who wishes to initiate a ground water withdrawal in any ground water management area and is not exempted from the provisions of this chapter by 9 VAC 25-610-50 may apply for a special exception in unusual cases where requiring the proposed user to obtain a ground water withdrawal permit would be contrary to the purpose of the Ground Water Management Act of 1992.

B. A special exception application shall be completed and submitted to the board and a special exception issued by the board prior to the initiation of any withdrawal not specifically excluded in 9 VAC 25-610-50 of this chapter. Special exception application forms shall be in a format specified by the board and are available from the Department of Environmental Quality.

C. Due to the unique nature of applications for special exceptions the board shall determine the completeness of an application on a case-by-case basis. The board may require any information required in 9 VAC 25-610-90 C 2 or 3 prior to considering an application for a special exception complete.

D. Where the board considers an application incomplete, the board may require the submission of additional information after an application has been filed, and may suspend processing of any application until such time as the applicant has supplied missing or deficient information and the board considers the application complete. Further, where the applicant becomes aware that he omitted one or more relevant facts from a special exception application, or submitted incorrect information in a special exception application or in any report to the board, he shall immediately submit such facts or the correct information.

9 VAC 25-610-180. Water conservation and management plans.

A. The board may require water conservation and management plans or specific elements of water conservation and management plans as described in 9 VAC 25-610-100 B prior to considering an application for special exception complete.

B. In instances where a water conservation and management plan is required, the board may include the implementation of such plans as an enforceable condition of the applicable special exception.

9 VAC 25-610-190. Criteria for the issuance of special exceptions.

A. The board shall issue special exceptions only in unusual situations where the applicant demonstrates to the board's satisfaction that requiring the applicant to obtain a ground water withdrawal permit would be contrary to the intended purposes of the Ground Water Management Act of 1992.

B. The board may require compliance with any criteria described in 9 VAC 25-610-110.

9 VAC 25-610-200. Public water supplies.

The board shall not issue special exceptions for the normal operations of public water supplies.

9 VAC 25-610-210. Conditions applicable to all special exceptions.

The holder of any special exception shall be responsible for compliance with all conditions contained in the special exception and shall be subject to the same requirements of permittees as described in 9 VAC 25-610-130.

9 VAC 25-610-220. Establishing applicable standards, limitations or other special exception conditions.

The board may issue special exceptions which include any requirement for permits as described in 9 VAC 25-610-140. Special exceptions shall not be renewed, except in the case of special exceptions that have been issued to allow ground water withdrawals associated with state-approved ground water remediation activities. In the case of reissuance of a special exception for a state-approved ground water remediation activity, the board may require the holder of the special exception to submit any information required in 9 VAC 25-610-90 C 2 or 3 and may require compliance with any criteria described in 9 VAC 25-610-110. In the case where any other activity that is being supported by the specially excepted withdrawal will require that the withdrawal extend beyond the term of the existing special exception, the ground water user shall apply for a permit to withdraw ground water.

9 VAC 25-610-230. Signatory requirements.

The signatory requirements for any application, report or certification shall be the same as those described in 9 VAC 25-610-150.

9 VAC 25-610-240. Draft special exception.

A. Upon receipt of a complete application, the board shall make a tentative decision to issue or deny the application. If a tentative decision is to issue the special exception then a draft

special exception shall be prepared in advance of public notice. The following tentative determinations shall be incorporated into a draft special exception:

1. Conditions, withdrawal limitations, standards and other requirements applicable to the special exception;

2. Monitoring and reporting requirements; and

3. Requirements for mitigation of adverse impacts.

B. If the tentative decision is to deny the application, the board shall return the application to the applicant. The applicant may then apply for a ground water withdrawal permit for the proposed withdrawal in accordance with Part III of this chapter.

PART V.

Public Involvement.

9 VAC 25-610-250.	Public notice of permit or special exception action and public comment period.
9 VAC 25-610-260.	Public access to information.
9 VAC 25-610-270.	Public comments and public hearing.
9 VAC 25-610-280.	Public notice of hearing.

9 VAC 25-610-250. Public notice of permit or special exception action and public comment period.

A. Every draft permit described in 9 VAC 25-610-160 A and draft special exception shall be given public notice in a form prescribed by the board and paid for by the owner, by publication once in a newspaper of general circulation in the area affected by the withdrawal.

B. Notice of each draft permit described in 9 VAC 25-610-160 A and draft special exception will be mailed by the board to each local governing body within the ground water management area within which the proposed withdrawal will occur on or before the date of public notice.

C. The board shall allow a period of at least 30 days following the date of the public notice for interested persons to submit written comments on the tentative decision and to request an

informal hearing.

D. The contents of the public notice of a draft permit or draft special exception action shall include:

1. Name and address of the applicant. If the location of the proposed withdrawal differs from the address of the applicant the notice shall also state the location in sufficient detail such that the specific location may be easily identified;

2. Brief description of the beneficial use that the ground water withdrawal will support;

3. The name and depth below ground surface of the aquifer that will support the proposed withdrawal;

4. The amount of ground water withdrawal requested expressed as an average gallonage per day;

5. A statement of the tentative determination to issue or deny a permit or special exception;

6. A brief description of the final determination procedure;

7. The address and phone number of a specific person at the department's office from whom further information may be obtained; and

8. A brief description on how to submit comments and request a public hearing.

E. Public notice shall not be required for submission or approval of plans and specifications or conceptual engineering reports not required to be submitted as part of the application or for draft permits for existing ground water withdrawals when such draft permits are based solely on historic withdrawals.

F. When a permit or special exception is denied the board will do so in accordance with 9 VAC 25-610-340.

9 VAC 25-610-260. Public access to information.

All information pertaining to permit and special exception application and processing shall be available to the public.

9 VAC 25-610-270. Public comments and public hearing.

A. All written comments submitted during the 30-day comment period described in 9 VAC 25-610-250 C shall be retained by the board and considered during the board's final decision on the permit or special exception.

B. The director shall consider all written comments and requests for an informal hearing received during the comment period, and shall make a determination on the necessity of an informal hearing in accordance with 9 VAC 25-230-50. All proceedings, informal hearings and decisions from them will be in accordance with Procedural Rule No. 1.

C. Should the director, in accordance with Procedural Rule No. 1, determine to dispense with the informal hearing, he may grant the permit or special exception, or, at his discretion, transmit the application or request, together with all written comments thereon and relevant staff documents and staff recommendations, if any, to the board for its decision.

D. Any owner aggrieved by any action of the board taken without a formal hearing may request in writing a formal hearing pursuant to Procedural Rule No. 1.

9 VAC 25-610-280. Public notice of hearing.

A. Public notice of any informal hearing held pursuant to 9 VAC 25-610-270 shall be circulated as follows:

1. Notice shall be published once in a newspaper of general circulation in the area affected by the proposed withdrawal; and

2. Notice of the informal hearing shall be sent to all persons and government agencies which received a copy of the public notice of the draft permit or special exception and to those persons requesting an informal hearing or having commented in response to the public notice.

B. Notice shall be effected pursuant to subdivisions A 1 and A 2 of this section, upon mailing, at least 30 days in advance of the informal hearing.

C. The content of the public notice of any informal hearing held pursuant to 9 VAC 25-610-270 shall include at least the following:

1. Name and address of each person whose application will be considered at the informal hearing, the amount of ground water withdrawal requested expressed as an average gallonage per day, and a brief description of the beneficial use that will be supported by the proposed ground water withdrawal.

2. The precise location of the proposed withdrawal and the aquifers that will support the withdrawal. The location should be described, where possible, with reference to route numbers, road intersections, map coordinates or similar information.

3. A brief reference to the public notice issued for the permit or special exception application and draft permit or special exception, including identification number and date of issuance unless the public notice includes the informal hearing notice.

4. Information regarding the time and location for the informal hearing.

5. The purpose of the informal hearing.

6. A concise statement of the relevant issues raised by the persons requesting the informal hearing.

7. Contact person and the address of the Department of Environmental Quality office at which interested persons may obtain further information or request a copy of the draft permit or special exception.

8. A brief reference to the rules and procedures to be followed at the informal hearing.

D. Public notice of any formal hearing held pursuant to 9 VAC 25-610-270 D shall be in accordance with Procedural Rule No.1.

PART VI.

Permit and Special Exception Amendment, Revocation and Denial.

9 VAC 25-610-290.	Rules for amendment and revocation.
9 VAC 25-610-300.	Causes for revocation.
9 VAC 25-610-310.	Causes for amendment.
9 VAC 25-610-320.	Transferability of permits and special exceptions.
9 VAC 25-610-330.	Minor amendment.

9 VAC 25-610-340. Denial of a permit or special exception.

9 VAC 25-610-290. Rules for amendment and revocation.

Permits and special exceptions shall be amended or revoked only as authorized by this part of this chapter as follows:

1. A permit or special exception may be amended in whole or in part, or revoked;

2. Permit or special exception amendments shall not be used to extend the term of a permit or special exception; and

3. Amendment or revocation may be initiated by the board, on the request of the permittee, or other person at the board's discretion under applicable laws or the provisions of this chapter.

9 VAC 25-610-300. Causes for revocation.

A. After public notice and opportunity for a formal hearing pursuant to 9 VAC 25-230-100 a permit or special exception can be revoked for cause. Causes for revocation are as follows:

1. Noncompliance with any condition of the permit or special exception;

2. Failure to fully disclose all relevant facts or misrepresentation of a material fact in applying for a permit or special exception, or in any other report or document required by the Act, this chapter or permit or special exception conditions;

3. The violation of any regulation or order of the board, or any order of a court, pertaining to ground water withdrawal;

4. A determination that the withdrawal authorized by the permit or special exception endangers human health or the environment and can not be regulated to acceptable levels by permit or special exception amendment;

5. A material change in the basis on which the permit or special exception was issued that requires either a temporary or permanent reduction, application of special conditions or elimination of any ground water withdrawal controlled by the permit or special exception.

B. After public notice and opportunity for a formal hearing

pursuant to 9 VAC 25-230-100 a permit or special exception can be revoked when any of the developments described in 9 VAC 25-610-310 occur and the holder of the permit or special exception agrees to or requests the revocation.

9 VAC 25-610-310. Causes for amendment.

A. A permit or special exception may, at the board's discretion, be amended for any cause as described in 9 VAC 25-610-300.

B. A permit or special exception may be amended when any of the following developments occur:

1. When new information becomes available about the ground water withdrawal covered by the permit or special exception, or the impact of the withdrawal, which was not available at permit or special exception issuance and would have justified the application of different conditions at the time of issuance;

2. When ground water withdrawal reports submitted by the permittee indicate that the permittee is using less than 60% of the permitted withdrawal amount for a five-year period;

3. When a change is made in the regulations on which the permit or special exception was based; or

4. When changes occur which are subject to "reopener clauses" in the permit or special exception.

9 VAC 25-610-320. Transferability of permits and special exceptions.

A. Transfer by amendment. Except as provided for under automatic transfer in subsection B of this section, a permit or special exception shall be transferred only if the permit has been amended to reflect the transfer.

B. Automatic transfer. Any permit or special exception shall be automatically transferred to a new owner if:

1. The current owner notifies the board 30 days in advance of the proposed transfer of ownership;

2. The notice to the board includes a written agreement

between the existing and proposed new owner containing a specific date of transfer of permit or special exception responsibility, coverage and liability between them; and

3. The board does not within the 30-day time period notify the existing owner and the proposed owner of its intent to amend the permit or special exception.

9 VAC 25-610-330. Minor amendment.

A. Upon request of the holder of a permit or special exception, or upon board initiative with the consent of the holder of a permit or special exception, minor amendments may be made in the permit or special exception without following the public involvement procedures.

B. For ground water withdrawal permits and special exceptions, minor amendments may only:

1. Correct typographical errors;

2. Require reporting at a greater frequency than required in the permit or special exception;

3. Add additional or more restrictive monitoring requirements than required in the permit or special exception;

4. Replace an existing well so long as the replacement well is screened in the same aquifers as the existing well, the replacement well is in the same location as the existing well, the ground water withdrawal does not increase, and the area of impact does not increase;

5. Add additional wells so long as the additional wells are screened in the same aquifers as the existing well, additional wells are in the same location as the existing well, the total ground water withdrawal does not increase, and the area of impact does not increase;

6. Combine the withdrawals governed by multiple permits into one permit when the systems that were governed by the multiple permits are physically connected, as long as the interconnection will not result in additional ground water withdrawal and the area of impact will not increase;

7. Change an interim compliance date in a schedule of

compliance to no more than 120 days from the original compliance date and provided it will not interfere with the final compliance date; and

8. Allow for a change in ownership or operational control when the board determines that no other change in the permit or special exception is necessary, provided that a written agreement containing a specific date for transfer of permit or special exception responsibility, coverage and liability from the current to the new owner has been submitted to the board.

9 VAC 25-610-340. Denial of a permit or special exception.

A. The applicant shall be notified by letter of the department's decision to recommend to the board denial of the permit or special exception requested.

B. The department shall provide sufficient information to the applicant regarding the rationale for denial, such that the applicant may, at his option, modify the application in order to achieve a favorable recommendation; withdraw his application; or proceed with the processing on the original application.

C. Should the applicant withdraw his application, no permit or special exception will be issued.

D. Should the applicant elect to proceed with the original project, the staff shall make its recommendation of denial to the director for determination of the need for public notice as provided for in Part V of this chapter.

PART VII.

Enforcement.

9 VAC 25-610-350. Enforcement.

9 VAC 25-610-350. Enforcement.

The board may enforce the provisions of this chapter utilizing all applicable procedures under the Ground Water Management Act of 1992 or any other section of the Code of Virginia that may be applicable.

PART VIII.

Miscellaneous.

9 VAC 25-610-360. Delegation of authority.
9 VAC 25-610-370. Control of naturally flowing wells.
9 VAC 25-610-380. Statewide information requirements.
9 VAC 25-610-390. Statewide right to inspection and entry.
9 VAC 25-610-400. Evaluation of regulation.

9 VAC 25-610-360. Delegation of authority.

The director, or his designee, may perform any act of the board provided under this chapter, except as limited by § 62.1-256.9 of the Code of Virginia.

9 VAC 25-610-370. Control of naturally flowing wells.

The owner of any well that naturally flows, in any portion of the Commonwealth, shall either:

1. Permanently abandon the well in accordance with the Virginia Department of Health's Private Well Construction Regulations; or

2. Equip the well with valves that will completely stop the flow of ground water when it is not being applied to a beneficial use.

9 VAC 25-610-380. Statewide information requirements.

The board may require any person withdrawing ground water for any purpose anywhere in the Commonwealth, whether or not declared to be a ground water management area, to furnish to the board such information that may be necessary to carry out the provisions of the Ground Water Management Act of 1992. Ground water withdrawals that occur in conjunction with activities related to the exploration and production of oil, gas, coal, or other minerals regulated by the Department of Mines, Minerals and Energy are exempt from any information reporting requirements.

9 VAC 25-610-390. Statewide right to inspection and entry.

Upon presentation of credentials the board or department, or

any duly authorized agent, shall have the power to enter, at reasonable times and under reasonable circumstances, any establishment or upon any property, public or private, located anywhere in the Commonwealth for the purposes of obtaining information, conducting surveys or inspections, or inspecting wells and springs to ensure compliance with any permits, standards, policies, rules, regulations, rulings and special orders which the board or department may adopt, issue or establish to carry out the provisions of the Ground Water Management Act of 1992 and this chapter.

9 VAC 25-610-400. Evaluation of regulation.

Within three years after the effective date of this chapter, the department shall perform an analysis of this chapter and provide the board with a report on the results. The analysis shall include (i) the purpose and need for the chapter, (ii) alternatives which would achieve the stated purpose of this chapter in a less burdensome and less intrusive manner, (iii) an assessment of the effectiveness of this chapter, (iv) the results of a review of current state and federal statutory and regulatory requirements, and (v) the results of a review as to whether this chapter is clearly written and easily understandable by affected entities.

Upon review of the department's analysis, the board shall confirm the need to (i) continue this chapter without amendment, (ii) repeal this chapter or (iii) amend this chapter. If the board's decision is to repeal or amend this chapter, the board shall authorize the department to initiate the applicable regulatory process to carry out the decision of the board.

ATTACHMENT U

1. Hydrogeologic Testing Publications (EPA, NJ, MD, Fla.)

New Jersey Geological Survey
Geological Survey Report GSR 29

GUIDELINES FOR PREPARING HYDROGEOLOGIC REPORTS FOR WATER-ALLOCATION PERMIT APPLICATIONS, WITH AN APPENDIX ON AQUIFER-TEST ANALYSIS PROCEDURES

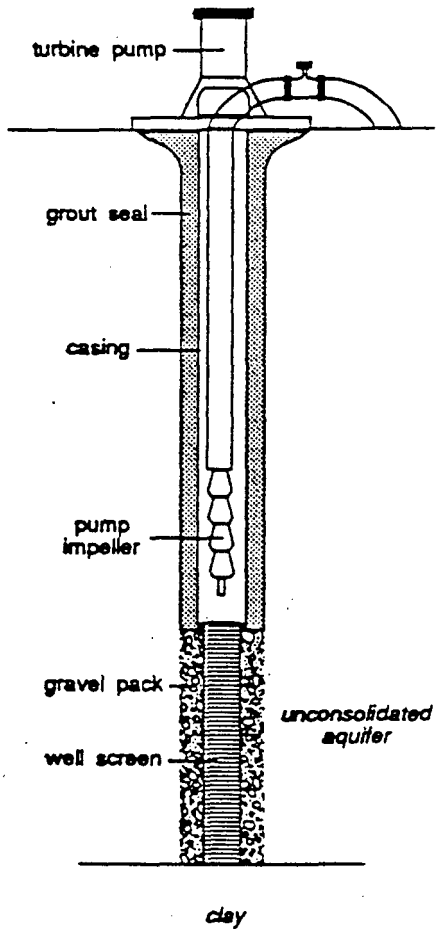

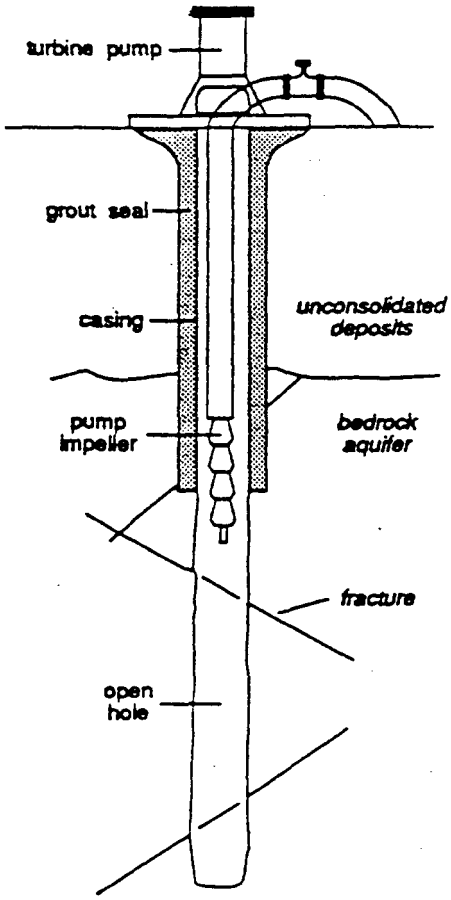

N.J. Department of Environmental Protection and Energy - Division of Science and Research

New Jersey Geological Survey
Geological Survey Report GSR 29

Guidelines for Preparing Hydrogeologic Reports for Water-Allocation Permit Applications, with an Appendix on Aquifer-Test Analysis Procedures

by
Jeffrey L. Hoffman, Robert Canace, James Boyle, George Blyskun

Revision of "Guidelines for Preparing Hydrogeologic Reports for Water-Allocation Permit Applications"
(New Jersey Geological Survey Technical Memorandum TM 89-3)

New Jersey Department of Environmental Protection and Energy
Division of Science and Research
New Jersey Geological Survey
CN-029
Trenton, NJ 08625

1992

STATE OF NEW JERSEY
Jim Florio, *Governor*

Department of Environmental Protection and Energy
Scott A. Weiner, *Commissioner*

Division of Science and Research
Robert Tucker, Ph.D., *Director*

Geological Survey
Haig F. Kasabach, *State Geologist*

All questions regarding the subject matter and use of this report should be addressed to the Bureau of Water Allocation, Water Supply Element, New Jersey Department of Environmental Protection and Energy at (609) 292-2957.

Questions concerning well permits, well construction practices, and driller licensing requirements should be directed to the Well Permit Section at (609) 984-6831.

Questions concerning water-allocation applications, aquifer tests, and hydrogeologic-report requirements should be directed to the Water Resources Management Section at (609) 292-2957.

Cover Illustration: Schematic diagrams of wells drawing water from unconsolidated and bedrock aquifers. Modified from Heath, 1983, p. 52.

Conversion Factors

Multiply inch-pound units	by	to obtain metric unit
inch (in.)	25.4	millimeter (mm)
foot (ft)	0.3048	meter (m)
mile (mi)	1.609	kilometer (km)
foot per second (ft/s)	0.3048	meter per second (m/s)
foot per mile (ft/mi)	0.189	meter per kilometer (m/km)
million gallons per day (Mgal/d)	0.04381	cubic meters per second (m^3/s)
square foot (ft^2)	0.0929	square meter (m^2)

Sea Level

In this report sea level refers to the National Geodetic Vertical Datum of 1929 (NGVD 1929)

New Jersey Geological Survey Reports (ISSN 0741-7357) are published by the New Jersey Geological Survey, CN-029, Trenton, NJ 08625. This report may be reproduced in whole or part provided that suitable reference to the source of the copied material is provided.

Additional copies of this and other reports may be obtained from:

Maps and Publications Sales Office
Bureau of Revenue
CN-417
Trenton, NJ 08625

A price list is available upon request.

Use of brand, commercial or trade names is for identification purposes only and does not constitute endorsement by the New Jersey Geological Survey.

Guidelines for preparing Hydrogeologic Reports for Water-Allocation Permit Applications, with an Appendix on Aquifer-Test Analysis Procedures

page

I. Introduction . . . 1
- A. Purpose . . . 1
- B. Overview . . . 1
  - 1. Hydrogeologic tests . . . 1
  - 2. Field procedures . . . 1
  - 3. Test-procedures proposal . . . 1
  - 4. Analysis and interpretation of data . . . 2
  - 5. Final hydrogeologic report . . . 2
  - 6. Analysis techniques . . . 2
- C. Regulatory basis . . . 2
- D. Acknowledgments . . . 2

II. Testing procedures . . . 2
- A. Identify potential well site(s) . . . 2
- B. Install test well(s) . . . 4
- C. Design and submit hydrogeologic-test proposal . . . 4
  - 1. Permits and approvals . . . 4
    - a. Well-drilling permits . . . 4
    - b. Water-allocation permits . . . 6
    - c. Discharge permits . . . 6
    - d. Wetlands permits . . . 6
  - 2. Nearby pumpage . . . 6
  - 3. Observation wells . . . 6
  - 4. Background-monitoring period . . . 8
  - 5. Recovery period . . . 8
  - 6. Determining the pumping rate . . . 9
  - 7. Measuring and sustaining the pumping rate . . . 9
  - 8. Discharge of pumped water . . . 9
  - 9. Ground-water-level measurements . . . 9
  - 10. Wetland and surface-water-body measurements . . . 10
  - 11. Streamflow measurements . . . 10
  - 12. Barometric-pressure effects . . . 12
  - 13. Tidal effects . . . 12
- D. Conduct hydrogeologic tests . . . 12
  - 1. Production and observation wells . . . 12
  - 2. Step-drawdown test . . . 12
  - 3. Aquifer test . . . 13
  - 4. Multiple-well (aquifer-stress) test . . . 13
- E. Evaluate hydrogeologic tests . . . 14
  - 1. Step-drawdown analysis . . . 14
  - 2. Aquifer-test analysis . . . 14
  - 3. Multiple-well-test analysis . . . 15

III. Final hydrogeologic report to accompany water-supply diversion application . . . 15
- A. Proposed diversion volume . . . 15
- B. General site data . . . 15
- C. Existing hydrogeologic data . . . 16
  - 1. Hydrogeologic setting . . . 16
  - 2. Aquifer properties . . . 16
  - 3. Confining-unit properties . . . 16

4. Data on other formations 16
5. Water-quality data 16
6. Other pertinent data 16
D. Nearby pumpage 16
E. Well and pump information 16
F. Test procedures 18
G. Test data 18
H. Test analyses 18
I. Radius of influence 18
J. Regional impacts 19
1. Previous ground-water users 19
2. Saltwater intrusion 19
3. Environmental impacts 19
4. Dependable yield 19
5. Regional ground-water models 20
K. Other regulatory considerations 20
1. Ground-water pollution 20
2. Water-Supply Critical Areas 20
3. Environmentally sensitive areas 20
4. Bureau of Safe Drinking Water 20
5. Local regulations 20

IV. Organizational and regulatory information 21
A. Organizational structure 21
B. Regulatory authorization 21

V. References 24

APPENDIX

Aquifer-test-analysis procedures

Types of aquifers 26
Confined 26
Unconfined 26
Semiconfined 26
Unconsolidated 27
Consolidated 27
Types of aquifer tests 27
Steady and unsteady aquifer tests 27
Testing of bedrock aquifers 27
Choice of testing methodology 28
Assumptions and common violations 28
Basic assumptions 28
Partially-penetrating wells 28
Variable discharge rate 28
Delayed yield 28
Aquifer boundaries 29
Anisotropic aquifers 29
Multiple-well tests 29
Fractured-rock aquifers 29
Solution-channeled limestone and dolomite aquifers 30

FIGURES

Figure 1. Steps required to complete application procedure 3
2. Sample form for reporting drawdown data 11
3. Partial organizational chart of state agencies 22

TABLES

Table 1. Essential items in a hydrogeologic test proposal 5
2. Observation-well placement 7
3. Schedule of water-level measurements in wells during an aquifer test 10
4. Items required in the final hydrogeologic report 17
5. Programs and regulations applicable to aquifer testing and water-supply wells 23
6. Types of aquifer-test analyses for 'uncomplicated' situations 31
7. Types of aquifer-test analyses for 'complicated' situations 32
8. Analytic solutions for tests in fractured rock and karst settings 33

"The purpose of design is to improve the probability that a test will yield acceptably accurate values of the hydraulic coefficients."
(Stallman, 1971, p. 16.)

GUIDELINES FOR PREPARING HYDROGEOLOGIC REPORTS FOR WATER-ALLOCATION PERMIT APPLICATIONS

I. INTRODUCTION

I.A. Purpose

The New Jersey Department of Environmental Protection and Energy (NJDEPE), through the Bureau of Water Allocation (BWA), reviews hydrogeologic reports submitted in support of applications for major water-supply allocations (more than 100,000 gallons per day). One frequent problem is inappropriate investigational and data-analysis techniques. This report presents guidelines for preparing a hydrogeologic report acceptable to BWA. It is a guide for designing a hydrogeologic investigation and then preparing and submitting the resulting report to NJDEPE.

This report does not cover all details of aquifer-testing procedures and ground-water hydraulics. Many ground-water texts do this; some are listed in the references. This report presents guidelines considered minimally acceptable by BWA and briefly describes appropriate methods of data analysis. Responsibility for the accuracy of the data and appropriateness of the analysis techniques lies with the applicant.

High-capacity wells can supply a large population. The wells may have regional effects on ground-water levels and flow patterns. Additionally, drilling, testing, and installing pumps and water lines can be expensive. Ensuring that such a well is properly located so as to provide the required volume of water without affecting other ground-water users justifies requiring an accurate and thorough hydrogeologic evaluation.

Figure 1 (page 3) is a flow chart summarizing the entire process of obtaining a water-allocation permit. This report does not cover the entire process, only those steps involving planning, conducting, and reporting acceptable aquifer tests.

This report was written at the request of, and with guidance from, the Bureau of Water Allocation. The guidelines reflect BWA's current (1992) practices. These are subject to change. An applicant should contact the BWA to learn of any such changes.

Temporary dewatering operations require a special permit. The process for applying for a dewatering permit is different from the process outlined in this report. The BWA will provide guidence when applying for a dewatering permit.

I.B. Overview

This report presents guidance in several different areas. These include the types of aquifer tests available, the appropriateness of each, some details on field procedures, appropriate analysis techniques and reporting requirements.

...I.B.1. Hydrogeologic tests

A hydrogeologic test provides information about the ground-water system. Three different hydrogeologic tests may be necessary to fully evaluate the feasibility and impact of a ground-water diversion. They are: (1) a step-drawdown test; (2) an aquifer test, and; (3) a multiple-well (aquifer-stress) test. BWA does not require the step-drawdown test, but recommends it. *BWA requires either an aquifer test or a multiple-well test for all allocation requests for new wells, increases in allocation for an existing pumping well, and requests for a larger pump size in an existing well. Under certain conditions both tests may be required.* For other cases a decision on the necessity of a hydrogeologic test is made on a case-by-case basis by BWA.

The applicant should notify the Bureau of Water Allocation, by telephone, of the intent to submit an aquifer-test proposal. The applicant is, at this initial contact, informed of the general acceptability of the concept of the proposed test. This helps prevent submission of inadequate or unnecessary aquifer-test proposals. Table 1 (page 5) outlines the items required in an aquifer-test proposal.

...I.B.2. Field procedures

In order for a hydrogeologic test to provide accurate and appropriate data, certain procedures must be followed. This report presents minimum standards for collection of data in section II, 'Testing procedures'. Selected references on well and aquifer test procedures are listed in the reference section of this document.

...I.B.3. Test-procedures proposal

An informal proposal detailing the procedures planned for a hydrogeologic test of a proposed production well, or for a multiple-well test of a well field, must be submitted to BWA. *The test-procedures proposal must be specific enough to enable an evaluation of the proposed field procedures.* Following approval, BWA must be notified before the test begins.

. . . I.B.4. Analysis and interpretation of data
Test data must be analyzed to determine the aquifer characteristics which govern ground-water flow, including transmissivity, storativity, vertical leakage, delayed yield, and anisotropy. Tests should be analyzed using techniques designed for the specific type of aquifer and test conditions. The appendix presents an overview of analytical techniques and situations appropriate for their use.

The applicant must also evaluate the diversion's possible effect on other aquifers and on ground-water users, contaminated areas, surface-water bodies and environmentally sensitive areas. More detailed descriptions of these and other considerations are detailed in section III, below.

BWA recognizes the need for flexibility under certain hydrogeologic, geologic and cultural conditions. When extenuating circumstances exist, adjustments are considered. These adjustments must be requested prior to the field tests. Under some conditions, one or more of the tests may be waived if they would not provide any new or relevant information. All requests for waivers must be in writing.

. . . I.B.5. Final hydrogeologic report
After all tests are conducted and analyzed, the final interpretive hydrogeologic report is submitted as part of the full water-supply diversion application. The final report must include a discussion of the field procedures, a listing of all data gathered, an analysis of the data, and an evaluation of the effect of the proposed diversion on the aquifer and all other ground-water and surface-water users.

. . . I.B.6. Analysis techniques
The appendix presents an overview of techniques for analyzing hydrogeologic test data. It is not comprehensive but covers the most common methods. Its primary purpose is to guide the investigator toward the most appropriate analytical method for particular hydrogeologic and testing situations. There is not a one-to-one relationship between aquifer types and analytical techniques, but the techniques chosen should adequately and accurately address the test conditions.

I.C. Regulatory Basis
The regulations which govern the application procedure are found in N.J.A.C. 7:19-1, 2, 3 *et seq.* Copies of these regulations are available upon request from the Bureau of Water Allocation. This report expands on the technical detail necessary to satisfy these regulations. Other regulatory information is presented in table 5 (page 23).

I.D. Acknowledgments
Bureau of Water Allocation staff, especially Diane Zalaskus, Rachel O'Brien and Andrew Hildick-Smith, provided guidance and very useful information for this report. The comments of John Cagnassola and James Schultes were very informative and much appreciated.

II. TESTING PROCEDURES

In planning and conducting hydrogeologic tests a series of steps should be followed. These are:

A) Identify potential well site(s);
B) Obtain well permit(s) and drill initial test well(s);
C) Perform and evaluate preliminary, short-duration well test;
D) Conduct hydrogeologic test(s), and;
E) Evaluate hydrogeologic test(s).

Some of the steps would be omitted under certain conditions. Each of these items is discussed in more detail below. This section is structured to follow the actual steps of preparing for, conducting, and analyzing an aquifer test. Each of its subsections is designed to be independent and some, of necessity, repeat information.

A useful technical reference on the proper field methods for measuring ground-water data is the 'National Handbook of Recommended Methods for Water-Data Acquisition' (United States Geological Survey, 1977). This document also provides technical guidance on field procedures for taking water-quality samples and surface-water measurements.

II.A. Identify Potential Well Site(s)
Before application is made for a major diversion, the applicant should conduct an initial investigation to identify a suitable test-well site. In general, it is desirable to select a site with reasonably uniform geology where the likelihood of ground-water contamination is low, the depletion of nearby streams and wetlands is unlikely and interference with nearby wells is not likely.

Well-site selection may be based on previous investigations, if the proposed diversion is in an area where the hydrogeology is well known. In unexplored areas, field studies may be needed to establish the probability of

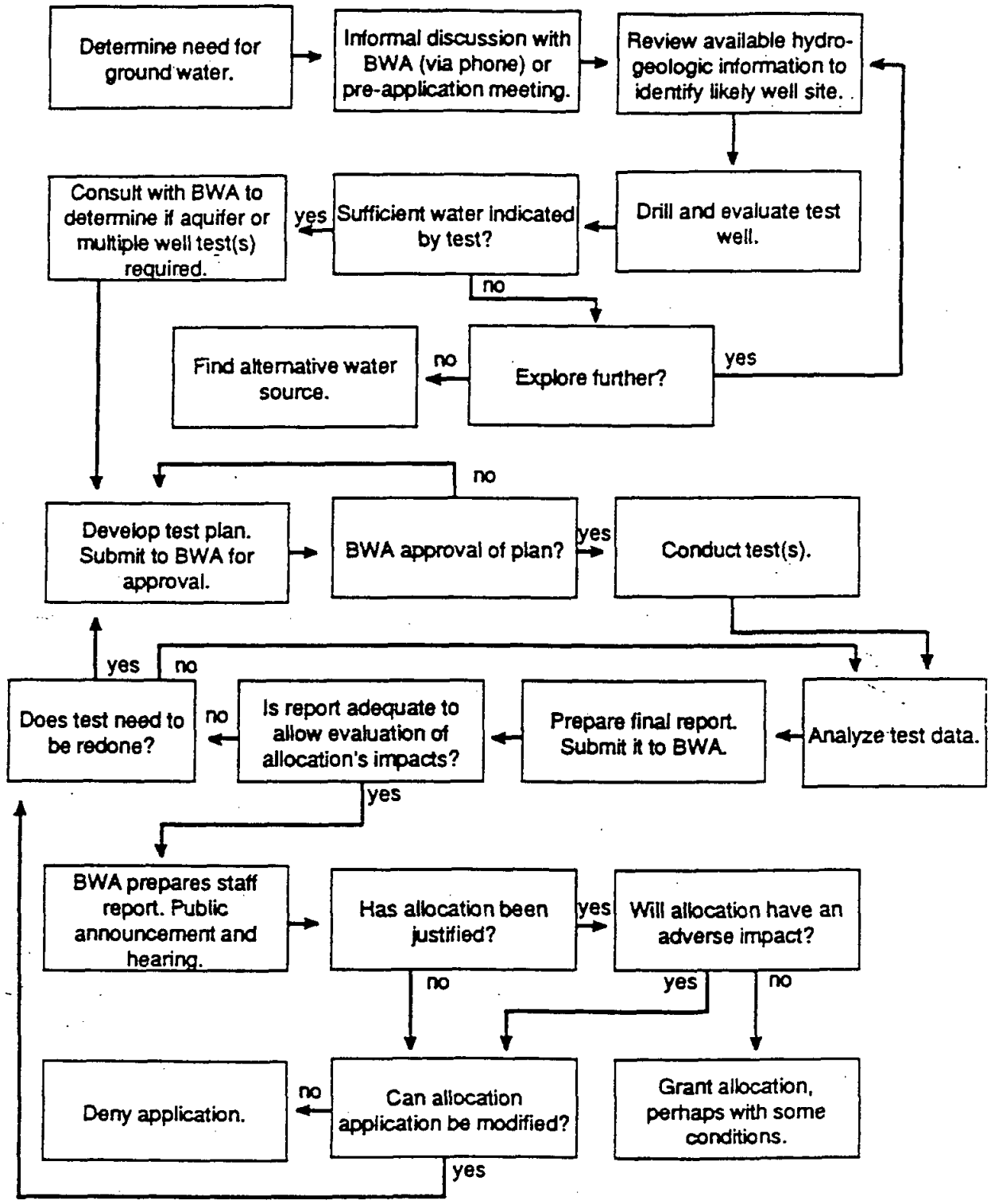

Figure 1. Steps required to complete application procedure.

drilling a successful test well. Published and unpublished geologic maps and reports on file with the New Jersey and United States Geological Surveys may assist the applicant in identifying a suitable well site.

Applicants should contact the Bureau of Safe Drinking Water to insure that the site selected for a public community supply well will satisfy all requirements under N.J.A.C. 7:10-11 *et seq.*, governing construction of water-supply facilities. These regulations cover minimum setback distances and other requirements.

II.B. Install Test Well(s)

A test well, commonly of six-inch diameter, is installed at the location believed most appropriate for a new major water supply. This well's major purpose is to help determine if the aquifer is suitable as a water-supply source. If properly located and constructed the test well may serve as an observation well during a subsequent aquifer and/or multiple-well test.

A review of the test well's geologic log and its discharge during drilling may indicate whether or not the site is suitable for further consideration. In some instances the site may clearly be unsuitable for a major water-supply well and thus a preliminary hydrogeologic test would be wasteful. In these cases more exploration work is needed to identify more productive sites.

If the test well is later converted to a production well a second well permit is required by BWA prior to conversion.

II.C. Design and Submit Hydrogeologic-Test Proposal

The purpose of the hydrogeologic test is to determine the performance and radius of influence of the proposed production well and the hydrogeologic characteristics of the aquifer. One or more of three hydrogeologic tests may be conducted: (1) step-drawdown tests; (2) aquifer tests, and; (3) multiple-well (or aquifer-stress) tests. A step-drawdown test evaluates well hydraulics. The aquifer test evaluates the hydrogeologic characteristics (transmissivity and storage coefficient, in particular) of the aquifer. Properly performed tests can also indicate aquifer boundaries, anisotropic conditions, sustainable yield, leakance, vertical flow and interference effects. The multiple-well test evaluates drawdown in the aquifer when the proposed withdrawal and all nearby withdrawals are taking place.

BWA normally requires either the aquifer test or a multiple-well test. Under certain conditions both may be required, or neither. The step-drawdown test is done at the discretion of the applicant.

When a hydrogeologic test is required the applicant must submit, for approval, a proposal fully describing the proposed test. If the proposal is adequate BWA will give written approval. The purpose of the proposal is to decrease the chances of an unacceptable test that will subsequently be rejected. Following approval, BWA must be notified before the test begins.

Table 1 outlines the items which should be included in the test-procedures proposal.

Producing accurate, continuous data from the tests requires detailed planning. It is important that all test procedures include contingency plans for emergencies. Common emergencies include malfunction of the pump, failure of water-level measurement devices, poor response of observation wells, discharge of water of unacceptable quality, unanticipated nearby pumpage, and adverse weather conditions. Emergencies which result in impairment of the data do not relieve the applicant of the duty to submit an accurate and adequate analysis of the aquifer. In some cases the test may have to be redone.

The following sections deal with the factors which must be addressed in planning the tests.

. . . II.C.1. Permits and approvals

The applicant may be required to obtain one or more permits before a hydrogeologic test can be conducted. A description of some possible permit requirements follows. Other state and local ordinances may apply to road building, emplacement of fill, sediment control and utility disruption, to name a few possibilities. It is the responsibility of the applicant to obtain all necessary permits before conducting an aquifer test.

. . . . . II.C.1.a. Well-drilling permits

A well-drilling permit must be obtained for all wells drilled in New Jersey (N.J.S.A. 58:4A-5 *et seq.*). As part of this process, information on proposed wells must be submitted to BWA. Obtaining well permits is the responsibility of the well owner. Permit applications must be submitted by a licensed well driller.

BWA issues a unique well-permit number to each well. *This number must be shown on all logs and data sheets to avoid the confusion that arises when using informal names alone for wells.*

As a followup to drilling the well, the driller is required to submit a well record within 60 days of completion. This record includes information on the well location,

Table 1. Essential items in a hydrogeologic test proposal.

1. Site data
   - -location of all wells
   - -location of pertinent features
   - -maps at appropriate scales (U.S. Geological Survey topographic map, detailed site map at 1:6,000 or larger)

2. Hydrogeologic data
   - -estimates of transmissivity, storage, and other aquifer hydraulic characteristics
   - -hydrogeologic setting of area
   - -local recharge/discharge estimates
   - -nearby wells and their pumpage

3. Well data (pumping and observation wells)
   - -permit number
   - -construction details
   - -screened intervals and formation(s) tapped
   - -well logs

4. Test description
   - -step-drawdown
   - -aquifer
   - -multiple-well

5. Identification of external influences
   - -precipitation
   - -barometric pressure
   - -tidal influences
   - -external pumpages
   - -surface waters

6. Monitoring schedule for pre-pumping (background) period
   - -length of period
   - -monitoring of relevant external influences
   - -monitoring frequency

7. Monitoring schedule for observation wells
   - -background, test and recovery-period monitoring schedules
   - -monitoring techniques

8. Monitoring schedule for pumping well
   - -monitoring schedule
   - -techniques for measuring water levels
   - -planned pumping rate
   - -discharge-measuring method and frequency
   - -discharge locations and description

9. Monitoring schedule for relevant external influences and concerns
   - -precipitation
   - -barometric pressure
   - -tidal influences
   - -external pumpages
   - -surface waters
   - -monitoring techniques

10. Monitoring schedule for post-pumping (recovery) period
    - -length of period
    - -monitoring of relevant external influences
    - -monitoring frequency

11. Applicable federal, state and local regulations and permits
    - -list of necessary permits
    - -status of permit applications

subsurface geology, hydrology, construction and pump characteristics.

Prior to applying for a permit, the applicant should contact the BWA well-permit section to ascertain exactly what information BWA requires. If a well drilled for one purpose is converted to another (for example a test well into a production well) an additional well permit is required. BWA's well-permit section can provide guidance.

Counties and municipalities may require that well owners obtain a permit. This permit may be issued by the local health department or the engineering office.

.....II.C.1.b. Water-allocation permits
All major water users are assigned a water-allocation permit number. If the application is for a change or renewal of a previous allocation, then this allocation permit number should appear on all correspondence. The water purveyor must also be accurately identified.

An aquifer test which is shorter than one month does not normally require an allocation permit.

.....II.C.1.c. Discharge permits
The water withdrawn from the aquifer during a hydrogeologic test must be discharged so as not to interfere with the test. A discharge permit may be required to dispose of water withdrawn from the aquifer during the test.

If the pumping rate during a hydrogeologic test will be greater than 100,000 gallons per day and the test duration will be less than 31 days then BWA does not require a separate withdrawal permit for the test. However, BWA does require notification of the test before it begins and a report on the volume of water pumped submitted after the test. BWA will supply two forms for these reports.

If discharge is to a nearby stream, or to a storm drain that discharges directly to a stream, a permit is not normally needed if the water is uncontaminated. In this case the applicant must submit a letter to the Bureau of Industrial Water Discharge Permits stating the duration of pumping, pumping rate, and discharge point, along with a chemical analysis of the water.

If discharge of water is to a sanitary sewer, then only the approval of the sewage treatment plant operator is required.

If the ground water contains contaminants, a New Jersey Pollution Discharge Elimination System (NJPDES) permit is required. The Bureau of Ground-Water Discharge Control must be notified in advance of a discharge of contaminated ground water to the ground. The Bureau of Industrial Water Discharge Permits must be notified for a discharge of contaminated water to a surface water body.

.....II.C.1.d. Wetlands permits
Any development in a wetland or its transition zone must be reviewed by the Bureau of Freshwater Wetlands Permits (N.J.A.C. 7:7A).

...II.C.2. Nearby pumpage
To yield usable information, the test must be conducted with some understanding and control of existing nearby pumpage. The effect of other pumping wells should be minimized, either by having them turned off or, failing that, maintaining their pumpage at a constant rate. The aquifer test proposal must identify all nearby pumping centers which might affect water levels at the observation points. The proposal must detail what steps will be taken to monitor or control nearby pumpages.

...II.C.3. Observation wells
The number, placement and depth of observation wells must be determined based upon the hydrogeology of the site (confining layers, for example), practical conditions (accessibility, for example) and test conditions (pumping rate, nearby wells). In most cases, the more observation wells available, the better the final analysis of aquifer properties. However, too many wells may be redundant and expensive. In some cases existing wells can serve as observation wells.

For a major water-supply well a minimum of three (3) observation wells is suggested. Two observation wells are required in all cases. Additional wells may be required by BWA depending on hydrogeologic conditions.

No minimum diameter is set on observation wells. Best results are often obtained from small-diameter wells, because they store little water inside the well; storage effects are thus minimal or rapidly eliminated. All observation wells, especially those of small diameter, must be constructed and developed to permit unhampered response to changes in aquifer water levels and to allow for monitoring of water levels by an appropriate technique.

All observation wells finished in unconsolidated material must have at least 5 feet of screen. Screens of the

first and second observation wells (those closest to the pumping well and completed in the same aquifer) should be centered at the same elevation as the center of the pumping well's screen.

If multiple units are being screened by the pumping well, then the number of observation wells and the depth, placement and screened interval may change. BWA will offer detailed guidance in these cases.

Information on observation-well placement is summarized in table 2.

The first observation well is ideally placed at a distance of 1.5 times the saturated thickness of the aquifer from the pumping well, but not less than 50 feet and not more than 200 feet. For instance, if the aquifer being tested is 80 feet thick, then the first observation well should be placed 120 feet away from the pumping well. If the aquifer is 150 feet thick, the observation well should be placed 200 feet (the maximum distance) away. In a consolidated formation, the location and depth of the first observation well may be influenced by the dip of the formation.

The second observation well should also be completed in the aquifer being pumped. It should be placed a distance from the pumped well equal to approximately 5 times the saturated thickness of the aquifer, up to a maximum of 1,000 feet. At a minimum, it should be twice as far from the pumping well as is the first observation well.

The third well is used to determine vertical leakage of ground water, if leakage from overlying units is a concern. The third well should be located within 10 feet of the pumping well, but at a shallower depth. The depth of the third well should be based on an analysis of the site's hydrogeologic conditions.

If the aquifer being pumped is unconfined, then the screen of the third monitoring well may be more advantageously placed at a lower elevation than the screen of the pumping well. The goal then would be to determine if any water was leaking upward into the water table aquifer from a lower unit.

If geologic conditions are such that a confining layer is suspected, but not confirmed, then the third observation well must be placed so as to make an estimate of vertical flow of water. For a confined aquifer the third observation well should be finished directly above the confining unit that forms the top of the aquifer. The well should not pierce the confining unit. This minimizes the possibility that a disturbed zone around the well casing will hydraulically connect the aquifer and overlying units. If such a connection is inadvertently created by the observation well, then water levels measured in this

Table 2. Observation-well placement.

Note: The first observation well is required. Some or all of the remaining observation wells may be required at the discretion of the Department. More wells may be required in some cases.

Observation well no.	Distance from pumping well	Vertical placement of screen opening
1	Ideally 1.5 x saturated aquifer thickness; in any case, >50 ft. away and<200 ft. away	in aquifer being pumped
2	Ideally 5 x saturated aquifer thickness; in any case <1,000 ft. away	in aquifer being pumped
3	within 10 ft. of pumping well	shallower than pumping well to estimate vertical leakage from above
4	within 10 ft. of pumping well	deeper than pumping well to estimate vertical leakage from below
5	same distance as first	in aquifer being pumped but perpendicular to a line drawn between the pumping well and the first observation well
6	as needed to investigate any hydrogeologic boundaries	where needed

well will yield misleading values for the actual overall vertical leakage rate.

If upward leakage from an underlying unit is believed to be an important consideration, as in the case of upconing of saltwater or depletion of an underlying aquifer, then the third well should be completed in the lower aquifer, or a fourth observation well may be required.

A separate observation well is needed to analyze for anisotropy in an aquifer. The third observation well may be dedicated to this purpose if anisotropy is a more important consideration than vertical leakage of water. An observation well to measure anisotropy may prove advantageous in some situations, particularly in bedrock aquifers. This additional well would be placed at the same distance from the pumping well as either the first or second observation wells, but in a different compass direction. In most cases, if practical, the first observation well and this additional well will form a right angle, with the pumping well at the vertex. In consolidated aquifers, the orientation of bedding and fractures can have a great influence on the degree of anisotropy. Understanding these geological characteristics is critical in order to accurately locate observation wells.

If a hydrogeologic boundary is known or suspected, an additional monitoring well may be required to monitor the effect of the boundary on water levels. Examples of this would include an observation well on the opposite side of a stream or fault from the pumping well, or near bedrock bounding a glacial valley-fill aquifer.

BWA reserves the right to require more observation wells in complex hydrogeologic settings. For this reason, the applicant is encouraged to contact BWA as soon as possible to determine the appropriate number and location of observation wells. BWA may invoke additional requirements over and above the aforementioned guidelines.

After the aquifer tests have been completed, any observation and test wells which will not be used must be properly sealed in accordance with state regulations (N.J.A.C. 58:4A-4.1, *et seq.*).

... II.C.4. Background-monitoring period

Monitoring pretest conditions at a site is important. Natural fluctuations in water levels, if not identified before pumping begins, can seriously complicate analysis of drawdown data. All observation points (wells, streams, wetlands, barometric pressure, and so on) should be monitored at 6-hour intervals during a 48-hour background period just prior to the start of pumping. Data measured during this period will establish base conditions. A longer background monitoring period may be appropriate in some instances to clarify questionable fluctuations. In special cases, measurements may be required more frequently than every 6 hours.

The background period is most important for the aquifer and multiple-well tests. It is usually not important for the step-drawdown test.

... II.C.5. Recovery period

A recovery period is required to permit measurement of water-level rises. Water-level recovery in the pumping and observation wells must be measured. Recovery data can be analyzed for information on aquifer parameters. In some cases recovery data are superior to drawdown data because they can lack erratic readings caused by fluctuations in the pumping rate.

The recovery-monitoring period must last a minimum of 8 hours. Beyond this, the recovery period must continue until water levels have recovered 90 percent of the drawdown observed in the pumping well. If feasible, pumping in the immediate vicinity should be controlled so as not to complicate interpretation of the recovery. Where this is not practical, it must be demonstrated that the water-level drawdowns caused by the well being tested have recovered by 90 percent.

During recovery, water levels should be measured in the pumping and observation wells according to the same schedule as was used for measuring drawdowns, using the time at which the pump was turned off as the starting time. This generates many data points during the early part of the recovery.

During the recovery period, all other monitoring points (streams, wetlands, tides, barometric pressure, and so on) should be observed at 6-hour intervals or shorter where appropriate.

If questionable fluctuations were observed during the pretest background monitoring period, extending the recovery period and taking measurements more often may help identify the fluctuations.

... II.C.6. Determining the pumping rate

During a hydrogeologic test the well should be pumped so as to simulate operation of the well. The rate is determined by the expected pumpage rate under normal operation. If, however, a higher rate would be necessary in order to pump the requested maximum monthly allo-

cation, this higher pumpage rate may be required by BWA.

An important consideration is that for all public community supply wells the Bureau of Safe Drinking Water (BSDW) requires a test pumping rate "at least 20% above the designed pumping rate" (N.J.A.C. 7:10-11.4n.1). If this latter rate is not achieved during the test, an additional test may be required by BSDW.

Information from any preliminary short-term well tests, and also from any step-tests, may be useful in indicating what pumping rate a site can sustain. Analysis of the preliminary tests, along with other hydrogeologic, regulatory and institutional considerations, will lead to an estimated maximum pumping rate (Q_{max}). Once application has been made to the Bureau of Water Allocation for an allocation pumping at Q_{max}, all aquifer tests (except the step-drawdown tests) should be done at this pumping rate. This is in order to more accurately predict the response of the aquifer to the anticipated pumpage.

The pumping rate must be kept constant throughout an aquifer test. Determining at what rate the aquifer can supply water to the production well may be a trial-and-error process. It is far better to determine an appropriate rate during a step-drawdown test than during the aquifer test.

...II.C.7. Measuring and sustaining the pumping rate
It is very important that the pumping rate be accurately measured and held as steady as possible. Fluctuations in the pumpage may be grounds for rejecting the aquifer test. Fluctuations certainly make analysis of the data more difficult.

Flow must be monitored by means of an automatic data recorder (ADR). The discharge rate must be measured at least once every 10 minutes during the first hour of the test and every 60 minutes thereafter.

As a backup to the ADR, the flow rate should be manually monitored. Measuring procedures include, but are not limited to, flow meters, totaling flow meters, weirs, orifice weirs and flumes.

A decrease in discharge will normally occur with increasing drawdowns as the pump works against a greater hydraulic head and increasing friction in the system. This tendancy for a reduction in the pumpage rate during the course of an aquifer test must be compensated for.

The pumpage rate should not be allowed to vary by more than 10 percent from the initial rate. Tests which have significant pumpage variations not accounted for in the data analysis will be rejected.

If, for some reason, the pump must be turned off during the test, it must be restarted within 10 minutes. No more than one 10-minute break should be allowed for every 6 hours of pumping. Owing to the extreme importance of the early-time data, no halting of the pump is allowed during the first two hours of the test. If the pump is halted during this period for any reason, the test must be restarted after allowing water levels in the pumped and observation wells to return to within 95 percent of pre-test levels.

The longer the pump is down the greater the chance that the data set will be unacceptably affected. This will result in a rejected aquifer test and rerunning the aquifer test.

...II.C.8. Discharge of pumped water
Water pumped from a well should be discharged to a point where it cannot infiltrate into the ground and flow back to the well during the test. If the pumped water were to be accidentally "recycled" this would create the appearance of recharge to the aquifer where none actually exists. In some cases (for instance, a deep aquifer with an overlying confining unit) this may not be a concern. In other cases (a carbonate rock aquifer with minimal overburden and sinkholes, or a shallow, unconfined sand aquifer) this could be a significant problem.

...II.C.9. Ground-water-level measurements
Accurate measurement of water levels in all wells is important. Levels must be measured with an accuracy of 0.05 foot. Depth to water is measured from an established reference point. The same reference point should be used each time a measurement is taken. The reference point's elevation relative to mean sea level (msl) must be measured if water-level contour maps of the area are to be made. If only drawdown data are desired, the elevation relative to mean sea level does not need to be determined.

Drawdowns must be reported in decimal feet. If original measurements were taken in different units (for example, pounds, psi, or inches) they must be converted to decimal feet. The original data, along with a description of any necessary conversion process, should be included in an appendix.

The frequency with which measurements are taken is very important. Water levels decline more rapidly at the

beginning of the test than later. The sampling schedule accounts for this. Water levels in the observation wells should be monitored according to the schedule in table 3. Figure 2 is a sample form suitable for recording of water levels.

Observation wells far from the pumping well may not require monitoring as frequently as closer wells. At BWA's discretion, a different measurement schedule may be used for distant observation wells.

Although levels in the pumping well are not as critical as those in the observation wells, they should be measured as accurately as possible. Water levels in the pumping well should be measured as scheduled in table 3.

Table 3. Schedule of water-level measurements in wells during an aquifer test.

Time since pumping began	Time between measurements in:	
	Observation wells *	Pumping well
0 - 2 minutes	10 seconds	30 seconds
2 - 5 minutes	30 seconds	30 seconds
5 - 15 minutes	1 minute	1 minute
15 minutes - 1 hour	5 minutes	5 minutes
1 - 2 hours	10 minutes	10 minutes
2 - 8 hours	30 minutes	30 minutes
8 - 24 hours	1 hour	1 hour
24 - 72 hours	2 hours	2 hours

*Longer intervals may be used in observation wells farther from the pumping well at BWA's discretion.

Data collected during the initial part of the pumping and recovery period are needed to accurately calculate the transmissivity and storage coefficient of the aquifer, as well as to quantify the effects of well-bore storage, fractures, and partial penetration of the aquifer by the pumping well. Late-time data are useful for analyzing the effects of vertical leakage and aquifer boundaries, and for determining the specific yield of unconfined aquifers.

During a 72-hour aquifer test the monitoring schedule produces many data points. The frequency with which water levels must be measured during the early part of the test may necessitate use of an automated recording system in one or more wells. In such cases manual measurements should be made occasionally as a check on the automatic system. Loss of data due to the mechanical malfunction of a recording system, with no manual "backup" measurements, is grounds for rejecting the results of an aquifer test.

...II.C.10. Wetland and surface-water-body measurements

If the proposed diversion's effect on nearby wetlands or water bodies is of concern, then these should be monitored. Several possible monitoring procedures could be used. Two are described here.

The first monitoring process involves installing two very shallow well points, with short (< 1 foot) screens centered approximately 3 and 6 feet into the saturated zone, in or next to the surface-water body. Water levels in these well points should be measured hourly during the test period and at 6-hour intervals during the background and recovery periods. The relative heights of water in the well points, and how they change during the test, can indicate whether there is sufficient head decline to deplete surface water during the test.

The second method, appropriate to small standing bodies of water such as ponds, involves placing a staff gauge or measuring stake into the water and measuring the water height hourly during the test. Measurements should be taken at 6-hour intervals during the background and recovery period.
All measurements must be taken with an accuracy of 0.05 foot or better. Results must be reported in units of decimal feet.

Any action which may affect the status of a wetland or its buffer zone must be reviewed by the Bureau of Freshwater Wetlands Permits.

...II.C.11. Streamflow measurements

If the effect of the proposed diversion on nearby streamflow is of concern, then streamflow must be monitored. Two methods may help establish whether pumpage is affecting streamflow.

The first monitoring process involves measuring ground-water levels under the stream in exactly the same manner as was described for surface-water bodies in the previous section.

The second method is by gauging streamflow. However, in all but the most extreme cases, it is expected that the diversion's effect on streamflow will be a small percentage of total stream flow. Stream depletion during the test period is likely to be smaller than the error associated with gauging flow in a stream. This method thus is unlikely to accurately measure stream depletion.

If the applicant monitors stream discharge, then streamflow should be measured during the background monitoring period, again approximately 24 hours after the

WELL-DRAWDOWN DATA

PROJECT _____
LOCATION _____
WELL NUMBER OR DESIGNATION _____
NJ WELL PERMIT NUMBER _____
DATUM _____
DATE _____

STATIC-WATER-LEVEL: Depth to water _____ ft.
Gauge reading _____ and units measured _____
Gauge measures _____
Airline length below datum _____ ft.
Datum elevation _____ (ft. above sea level)
Observer _____

Date	Clock Time	Pumping Time	Water-Level Reading	Drawdown	Flow Meter Reading	Discharge Rate	Remarks

Figure 2. Sample form for reporting drawdown data.

start of the test, and again 48 hours after the start. Flow should be measured both upstream and downstream of the area thought to be affected by the pumpage.

Precipitation can significantly affect streamflow and make it difficult to isolate the effect of the pumping well.

... II.C.12. Barometric-pressure effects
Changes in barometric pressure may affect ground-water levels, especially in confined aquifers. Measuring the air pressure, and correcting water-level data for observed changes will increase the accuracy of the water-level data. Measurements every 6 hours are adequate during the background and recovery periods. Hourly measurements are needed during the test period.

The barometric pressure must be measured at the test site.

... II.C.13. Tidal effects
Tidal cycles may significantly affect ground-water levels. This cyclic change can be partially accounted for, but will introduce some error into the measurements. If tidal effects are present, a gauge should be installed in the tidal water body. Correction of observed ground-water data can be based on the tide readings (Serfes, 1987). The correction technique can be a simple graphical correction or a more complicated tidal-frequency analysis with a correlated ground-water response function for each well.

Tidal measurements every 2 hours are adequate during the background and recovery periods, but hourly measurements are required during the test period.

II.D. Conduct Hydrogeologic Tests
Once approval is obtained to proceed with testing of the proposed production well, the step-drawdown test is done first, followed by the full-scale aquifer test and/or multiple-well test. BWA does not require the step-drawdown test. It is, however, extremely useful in determining the appropriate pump size and pumping rate for the well. If a step-drawdown test is not done and the test well cannot maintain a constant pumpage rate during the aquifer test, then the allocation request may be denied.

Both the aquifer test and multiple-well test are assigned at the discretion of BWA. Usually one of them is required, but in special cases both or neither may be necessary.

Hydrogeologic tests are conducted to measure site-specific hydrogeologic characteristics. These tests must be conducted properly to maximize the information derived from them. The general procedure is to pump water from the well, measure pump discharge, and measure drawdown and recovery of water levels in the observation wells and pumped well.

The following sections briefly outline the steps necessary to conduct the hydrogeologic tests.

... II.D.1. Production and observation wells
The production well is drilled at a site believed to be the most productive and that will interfere least with other ground-water users. Production wells must be constructed in accordance with state regulations administered by the Bureau of Safe Drinking Water (N.J.A.C. 7:10-11.1 and 12.1). Careful attention should be paid to the lithology of the aquifer. Reasonable estimates of aquifer permeability can sometimes be made on the basis of laboratory analysis of core samples and grain-size distribution.

The number and placement of observation wells is covered in detail in section II.D.3. above.

A special type of production well involves a series of horizontal bore holes radiating out from the bottom of a large-diameter vertical shaft (for example, a Ranney well). Water flows horizontally through the bore holes into the vertical shaft and is then pumped to the surface. The hydrogeologic tests described in this report cannot be performed on this type of well. BWA will provide specific guidance on applications for allocation permits for these wells.

... II.D.2. Step-drawdown test
A step-drawdown test is intended to provide information on the relationship between yield and drawdown in a well. It is used to calculate additional drawdown caused by frictional and turbulent effects at different pumping rates. It is usually employed to evaluate well construction and pumping efficiency but can also provide a means of predicting well performance during more sustained pumping tests. The results are analyzed to determine if well losses in the production well indicate the need for additional well development. The step-drawdown analysis is useful in evaluating the sustainability of the planned pumping rate for the long-term aquifer test, selecting performance specifications for the permanent pumping equipment, and devising a pumping schedule for optimum efficiency.

The step-drawdown test can be done on the test well to estimate the aquifer yield. In this case it probably would be performed before the aquifer test. This test could also be done on the supply well to estimate the most efficient pump size. In this case it would probably be done after the aquifer test.

A step-drawdown test involves increasing pumpage from a well in successive equal steps or stages. Drawdown at each pumping level is measured. Pumping begins at a low rate and then increases in successive steps. It is suggested that for wells in an unconsolidated formation the well be pumped at a minimum of four different rates or steps: 25, 50, 75, and 100 percent of the proposed production pumping rate. (Pumping at higher rates could yield useful information and should be considered if the higher rates will not damage the well's screen or gravel pack.) For wells in a consolidated aquifer (without a well screen), an additional two steps, 125 and 150 percent, should be added. At each step the pumpage rate is held constant for 1 hour or longer. If the highest pumping rate cannot be achieved, then a rate as high as possible should be used.

Alternative pumping-rate and duration schedules may be appropriate in certain situations. BWA will provide guidance in these cases.

Water levels in the pumping well should be measured as frequently as necessary to observe significant changes in water levels. At a minimum, they should be monitored every 5 minutes.

If the aquifer test is run immediately after the step-drawdown test, the water levels must be allowed to fully recover after the first test before running the second. The aquifer test may not be a continuation of the last pumping step of the step-drawdown test.

... II.D.3. Aquifer test

An aquifer test is designed to yield information on the hydrogeologic parameters of the ground-water system. The term 'aquifer test' is used because it is principally the aquifer, rather than the well, which is being evaluated. Water is withdrawn from one well and drawdowns are measured in several observation wells. Measurements must be taken at the observation points during the background period (before pumping begins), during the test, and during the recovery period. Other influences on drawdowns (for example, outside pumping, barometric changes, or tidal effects) should either be eliminated or quantified. Time schedules for measuring water levels during these periods, as well as the lengths of the periods, are given in table 3 (page 10). The test should last for a minimum of 72 hours. Longer test periods may be required in certain cases, such as for aquifers in which delayed drainage is of concern, leaky aquifers, or confined aquifers near hydrogeologic boundaries.

The duration of the pumping period beyond the required minimum is decided by the applicant. At the end of 72 hours, the applicant should examine the drawdown data and decide if they are analyzable. If the drawdown in the well has stabilized, then equilibrium-type solutions can be applied. The applicant should extend the test if data observed during the first 72 hours warrant the extension.

To be consistent with requirements in "Standards for Construction of Public Community Water Systems" (N.J.A.C. 7:10-11, *et seq.*), public community wells being tested should be pumped at 120 percent of the maximum requested diversion rate. Any request for waivers from this volume for these types of wells must be addressed to the Bureau of Safe Drinking Water.

If the drawdown in the well has not stabilized, it is exhibiting nonequilibrium behavior. A subsurface barrier to ground-water flow retards stabilization of the cone of depression as it impedes recharge to the well. Whenever discharge from the well exceeds recharge to the drawdown cone, the cone will not stabilize. In the case of nonequilibrium pumping, the applicant should make a decision on continued monitoring of the drawdown. The decision to cease pumping after the required minimum 72-hour pumping period, therefore, is largely a function of the confidence of the applicant in successfully analyzing the test data to yield aquifer parameters.

A full-scale aquifer test requires careful planning. Most of the design considerations mentioned previously deal specifically with aquifer tests. Field personnel must install, service, and monitor all observation devices during the background, testing, and recovery periods. Backup equipment may be needed to insure an uninterrupted test. Planning for adverse weather conditions and mid-test interruptions is advised.

... II.D.4. Multiple-well (aquifer-stress) test

The purpose of a multiple-well test is to determine the effect of the proposed withdrawal in conjunction with any other ground-water withdrawals already occurring at or near the site. Whereas the aquifer test is aimed at determining aquifer hydraulic characteristics which permit calculation of drawdown, the multiple-well test is conducted to determine actual water levels in the aqui-

fer under short-term, highly-stressed conditions, when the proposed well is operational. It is assumed that existing pumpage already has a quantifiable effect on water levels. The purposes of the stress test are to determine if the proposed additional pumpage will create additional drawdown, and to assess any associated impact.

The procedure for a multiple-well test involves simulating conditions of maximum planned water use. First, all nearby production wells are pumped at their maximum allowed pumpage rate for a 'background' period of 24 hours. (This is to simulate the maximum anticipated drawdowns already experienced in the area during peak use. If the test is performed during a period of less than peak use, the wells may have to be pumped at more than the current system demands. The additional water should be diverted to a storm drain or stream at a point that precludes recharge to the aquifer of interest in the test area.) Measurements are taken at all points of concern (observation wells, pumping wells, lakes, wetlands, and so on) every 6 hours during this background period.

Next, after the background period, the proposed well is pumped at its maximum allowable pumpage rate for 24 hours, the 'stress' period. During this time pumpage continues at all nearby production wells. Measurements continue to be taken at all points of concern, but at 2-hour intervals.

After the stress period, the pump in the proposed well is turned off, but pumpage continues in all nearby production wells for an additional 12 hours. During this 'recovery' period, measurements are taken at all points of concern every 2 hours.

During the entire multiple-well test, nearby production wells are pumped for a total of 60 hours. During this time pumpage should be kept constant. Pumpage variations create water-level fluctuations that complicate interpretation of the effect due only to the proposed new allocation.

In the special case where the requested new pumpage is to be supplied by more than one well, BWA will give guidance on exactly how to add the total new pumpage.

Analysis of the multiple-well test gives necessary information as to the combined impact of the total pumpage in an area before and after the introduction of a new diversion. Separating the effects of individual wells is complex, and is not necessarily the object of the stress test.

An informal report detailing the planned procedures for a multiple-well test must be submitted to BWA before the test is performed. After approval, BWA must be notified before the test begins.

II.E. Evaluate Hydrogeologic Tests

Interpreting test data requires an understanding of the hydrogeologic system and the conditions under which the test was conducted. Evaluation of the hydrogeologic setting and analysis of the data derived from the step-drawdown, aquifer, and multiple-well tests should be done by a hydrogeologist. The acceptance of an applicant's well-test report will depend, in part, on the competency of those conducting and analyzing the test.

Evaluating the hydrogeologic tests is complicated by many factors. The geologic conditions rarely match all of the assumptions required by the available analytical techniques. The hydrogeologist usually must evaluate the data using several methods and, based on professional judgment, provide a range of values for aquifer hydraulic parameters. The appendix of this report discusses selected analytical methods appropriate for various hydrogeologic settings.

...II.E.1. Step-drawdown analysis

Several methods are available to analyze the results of the step-drawdown test. The well-loss coefficient and well efficiency value can be calculated from the results of the test. Well efficiency is an often-confused term. Simplified, it is the ratio between the theoretical and actual specific capacity of the well. References are provided in the appendix of this report.

The pumping rate and pump size for optimum well efficiency are based on analysis of the well loss, well efficiency, drawdown, required water volume, depth of installed pump, and other engineering factors.

...II.E.2. Aquifer-test analysis

Numerous methods are available for analyzing aquifer-test data. Specifying which method is appropriate for all possible combinations of geologic conditions is beyond the scope of this document. Analytical techniques appropriate for the most common hydrogeologic conditions are outlined in tables 6, 7 and 8 (pages 31-33). References that discuss the analysis of aquifer-test data are in the appendix.

Aquifers can generally be grouped into three types: (1) confined (or artesian); (2) unconfined (or water table); and (3) semiconfined (or leaky-artesian). A ,uifer tests, furthermore, are divided into unsteady-state (before

drawdown has stabilized) and steady-state (after drawdown has stabilized). Behavior of the time/drawdown data can indicate which analytical method is most suitable for prevailing hydrogeologic conditions. A preliminary analysis of the data using more than one technique is often required before the appropriate analytical solution becomes evident.

...II.E.3. Multiple-well-test analysis
Conducting and analyzing a multiple-well (aquifer-stress) test is straightforward. All existing wells in an area are pumped at maximum allowable rates. Drawdown is measured at a series of observation points. (Observation points can include nearby domestic wells, other major pumping wells, streams, and surface wetlands.) Pumpage from the proposed production well is then added, keeping all other pumpage constant. Drawdown is again measured at the observation points. The entire test should last long enough to allow any additional drawdown caused by the new pumpage enough time to affect the observation points.

Analysis assumes that all additional drawdown is caused by the incremental pumpage. The total drawdown at the observation points is evaluated to determine the additional drawdown attributable to the proposed pumpage.

The additional drawdown in nearby existing wells attributable to a new allocation may or may not be significant. BWA determines significant impact on a case-by-case basis.

Another possible problem is that a new well may intercept ground water which had been flowing to a pre-existing well. This may cause greater drawdowns around the older well with resulting interference in more distant pumping wells, stream depletion, or movement of low-quality ground water.

III. FINAL HYDROGEOLOGIC REPORT TO ACCOMPANY WATER-SUPPLY DIVERSION APPLICATION

Much information is needed to properly evaluate a water-supply diversion application. An outline of all applicable items is shown in table 4 (page 17).

Some of the required information can be found in published reports. For areas with existing wells, additional information may be available through the Bureau of Water Allocation's files. Undoubtedly, some of the information will have to be generated by the applicant through a site-specific study. All of the data gathered by the applicant should be available to BWA for review; most of this will need to be submitted as part of the final hydrogeologic report.

Based on the available information, BWA can either approve, conditionally approve, or disapprove the application. BWA can also require tests to be conducted or more information to be submitted.

A discussion of the items that should be included in the final hydrogeologic report follows.

III.A. Proposed Diversion Volume
The applicant must state and justify the requested diversion volume in terms of the total yearly volume, average yearly pumping rate, maximum monthly pumpage volume, and maximum instantaneous pumping rate. The applicant must submit a general pumping schedule for the proposed well which includes an estimate of total pumpage for each month of the year. This is intended to identify wells with seasonal variation in pumpage and to ascertain if the proposed pumping schedule is consistent with the aquifer's assessed capabilities.

The application should also include an analysis of existing use, projected growth, production/consumption ratio, water-quality limitations, available interconnections, and other pertinent data in order to justify the allocation.

III.B. General Site Data
The applicant must accurately show, on a 7.5-minute U.S. Geological Survey topographic quadrangle map, the site of the proposed water-supply well. Detailed site maps pinpointing the proposed production and observation wells must also be submitted at a minimum scale of 1:6,000. All roads, pumping wells, relevant property lines, streams, wetlands, pollution sites and environmentally sensitive areas within 5 miles of the site must also be shown. Other areas which may affect or be affected by the proposed diversion should also be shown. More than one map may be required to show all necessary data at an appropriate scale.

Other pertinent information should include average local precipitation, land use, proposed development near the well location, and tidal variations, if applicable. In some cases the Bureau of Water Allocation may require

average precipitation by month. Any reasonable factor which could affect the quality and quantity of water pumped from the proposed well should be discussed.

III.C. Existing Hydrogeologic Data

Many hydrogeologic factors govern ground-water occurrence, flow, and quality at a site. It is beyond the applicant's scope to conduct a field investigation of all factors. However, many state, federal and private reports cover regional hydrogeology throughout New Jersey. Additionally, logs from wells drilled at or near the site can provide valuable information. The applicant should conduct a literature search for information concerning the site and the adjacent region.

... III.C.1. Hydrogeologic setting

The applicant must describe the hydrogeology of the project area, including aquifer and confining unit(s) thicknesses, areal extent, outcrop areas, and relationships to other aquifers. A brief description of the hydrogeologic setting is appropriate. This description should include a discussion of the expected recharge area of the water that would supply the requested diversion.

... III.C.2. Aquifer properties

The applicant should submit a summary of known values for aquifer hydraulic conductivity, transmissivity, storage coefficient, thickness, and any other relevant aquifer characteristics. If nearby aquifer tests have been conducted, results from these would be a valuable supplement. A comparison between previously known values and those derived from the new test(s) is valuable.

A map of the regional ground-water flow pattern is required. This helps identify recharge and discharge areas, hydraulic heads in the various aquifers, and geologic controls on ground-water flow. The applicant should also submit an interpretation of ground-water-flow patterns based on data collected during the test period. Regional maps may be constructed from a combination of field data, well-record data, and sound hydrogeologic assumptions.

... III.C.3. Confining-unit properties

Confining units overlying and underlying the aquifer can exert a profound effect on the aquifer. Impermeable units can prevent local recharge or discharge (perhaps inducing recharge or discharge in more distant areas), prevent vertical migration of pollutants or saltwater, and have other effects. Leaky, semipermeable units may allow limited vertical flow. The thickness, vertical hydraulic conductivity, and areal extent of the confining units are of great importance. All available information relevant to the confining units in the vicinity of the proposed diversion site should be submitted.

... III.C.4. Data on other formations

Other formations in the stratigraphic column may affect the aquifer being pumped. For this reason information on the hydraulic characteristics, areal extent, water levels, nearby pumpage, known leakage, and other relevant factors in these neighboring formations is required. Of special interest are data bearing on the potential for hydraulic interconnections between water-bearing units.

... III.C.5. Water-quality data

The chemistry of the ground water at the site may have an effect on the suitability of the water for domestic or industrial purposes. The applicant must note whether any quality data are available. This includes any raw-water data collected for the Bureau of Safe Drinking Water for a proposed public water-supply well.

... III.C.6. Other pertinent data

Any other information the applicant feels would be useful in characterizing the aquifer and predicting the effect of the proposed diversion is required. All references used in preparing the application must be properly cited so as to allow for further research.

III.D. Nearby Pumpage

Public-supply and major pumping wells yielding more than 100,000 gallons per day within 5 miles of the proposed diversion must be identified, regardless of the aquifer tapped. The pump capacity is required for each major well cited. Assistance can be provided by the Bureau of Water Allocation.

All domestic wells within a 1-mile radius of the proposed well should be identified. If a major subdivision (50 homes or more) with individual wells lies between 1 and 3 miles from the site, simply locating the subdivision and giving the total number of wells and average well depth is acceptable. BWA has well records and well permits available for public review. An appointment is necessary in order to view BWA's records.

III.E. Well and Pump Information

The applicant must present data on planned construction of the production well. This includes total depth, screen and casing specifications, and any other pertinent data.

Technical specifications of the permanent pump, along with the pump's performance curve and proposed installation depth, are required. If these data are not available

Table 4. Items required in the final hydrogeologic report.

1. Proposed diversion
   - -total yearly pumpage
   - -maximum monthly pumpage
   - -proposed pumpage schedule

2. Site data
   - -roads, property lines, buildings
   - -nearby environmentally sensitive areas
   - -nearby surface-water bodies, streams, and wetlands
   - -nearby pollution sites
   - -maps at appropriate scales (U.S.G.S. 1:24,000 quadrangle scale map, site map at 1:6,000 or larger)
   - -other pertinent information

3. Hydrogeologic data
   - -thickness, areal extent, and recharge areas of aquifer
   - -thickness and areal extent of any confining units
   - -thickness, areal extent, and recharge areas of any other aquifers at the site
   - -hydrogeologic parameters of all aquifers pertaining to the diversion
   - -hydrogeologic parameters of all confining units pertaining to the diversion
   - -discussion of generalized flow path in aquifer
   - -recharge/discharge estimates
   - -any pertinent water-quality data
   - -other pertinent information

4. Nearby pumpage
   - -domestic wells within 1 mile
   - -all allocation permits within 5 miles (with pumping rates)
   - -all public-supply wells within 5 miles (with pumping rates)

5. Pumping and observation-well information
   - -casing diameter, type, and depth
   - -screen length, depth, and slot size
   - -gravel pack specifications
   - -well development method(s)
   - -prior tested (efficiency, specific capacity)
   - -size, installation depth, and rating curve of final pump
   - -other pertinent information

6. Test description
   - -type of test(s)
   - -field procedures used
   - -changes from pretest proposal

7. Test data
   - -all measurements made during background period
   - -all measurements made during test period
   - -all measurements made during recovery period

8. Test analyses
   - -analysis method(s) used and appropriateness
   - -calculated values
   - -consistency of calculated values with previous values
   - -discussion of any data or analysis anomalies
   - -estimated accuracy of results

9. Regional effects
   - -other ground- and surface-water users
   - -saltwater intrusion sites
   - -environmentally sensitive areas
   - -dependable yield of the aquifer
   - -regional ground-water model
   - -surface water, streams, wetlands

10. Other regulatory considerations
    - -ground-water pollution
    - -ground-water impact areas
    - -water-supply critical areas
    - -environmentally sensitive areas
    - -other relevant considerations

at the time of application, they should be submitted when available. If pump performance is being submitted to the Bureau of Safe Drinking Water, then it need not be also submitted as part of this report.

If the well has been pumped previously, its performance history is needed, including pumping rates and drawdowns from any previous aquifer tests. If the well has been geophysically logged by downhole methods, or by a TV log, the log is also required.

Any other factor which might affect the performance of the well and/or pump, such as age and redevelopment techniques, should be identified.

III.F. Test Procedures

The report must specify the procedures used during testing of the proposed production well. This includes a description of measurement devices, locations and schedules of measurements, variations in discharge, and all other relevant procedures.

Any changes from the planned test procedures must be noted, highlighted, and explained in the final report.

III.G. Test Data

All data taken during the test must be reported. These include water levels at all monitoring points, pumping rates, barometric pressure, streamflow volumes, precipitation, and all other relevant data. It is recommended that these data be added to the report in an appendix. It would be helpful if the applicant would submit the information additionally in the form of a file (or files) on a computer data disk.

III.H. Test Analyses

All analyses of the test data must be reported. In addition to reporting the final values, the applicant must supply worksheets or graphs showing the calculations. If computer software was used in interpretation, it must be identified, along with representative printouts of calculation techniques.

III.I. Radius of Influence

The radius of influence of a pumping well defines an area that experiences an effect attributable to that pumping well. This concept is easy to state but is in practice difficult to quantify. BWA considers the radius of influence to be that area which experiences one foot or more of ground-water drawdown when water levels have completely stabilized in response to the proposed allocation's maximum demand.

In a water-bearing unit which meets *all* theoretical conditions of an ideal confined aquifer, the radius of influence extends an infinite distance from the pumping well. The aquifer receives no recharge and a pumping well will eventually influence all parts of the aquifer.

In a strict sense, no water-bearing unit in New Jersey meets all of the requirements of an ideal confined aquifer. All aquifers have a source of recharge, perhaps an outcrop area many miles away, or slow leakage from an adjacent unit. However, if the recharge is sufficiently slow or far away, then the aquifer will appear to be confined for a test of the duration required by BWA.

Radius-of-influence calculations are not the only indicator of those areas subject to adverse effects. BWA reserves the right to establish areas of significant impact outside a calculated radius of influence.

Five methods for calculating the radius of influence are presented here. There may be others just as acceptable; no single method is appropriate in all situations. In making an estimate of the radius of influence of a pumping well it is important to determine whether water levels have completely stabilized. This may not happen during a 72-hour aquifer test. If it doesn't, then water levels should be projected to stable levels.

The first method, perhaps the most popular, is the Jacob distance-drawdown method for multiple observation wells in a confined aquifer. On a semilog graph, drawdown in each well at a specified time is plotted on the linear scale while distance is shown on the logarithmic scale. A line drawn through the drawdown data can be extended to show the distance at which drawdown is zero. This distance is then interpreted to be the radius of influence. One problem with this method is that the line drawn depends upon the time at which the measurements were taken and the rate at which the well was pumped. The radius of influence thus could be different for different times and pumping rates; there is no unique radius of influence. Additionally, this methodology is based upon a confined-aquifer analysis technique and does not explicitly allow for any recharge.

The second method predicts the distance from a pumping well at which a specified drawdown (1 foot, for example) will occur after a specified period of time (1 year, for example), assuming no recharge takes place. This method uses values of transmissivity and storage derived from hydrogeologic tests. The assumption is then made that, in the real world, the aquifer receives recharge. Thus this calculation results in a conservative

estimate of that area actually affected by pumping. This calculation, like the Jacob graphic solution, is highly dependent upon the drawdown and time chosen.

The third determines, by an appropriate method, the average yearly ground-water recharge in the area of the well. The radius of influence is then assumed to be that distance from the pumping well which encompasses enough area to provide sufficient ground-water recharge to offset pumpage. This method makes no allowance for input from ground-water flow or the changes in the area of influence of the well in years of higher or lower ground-water recharge.

The fourth method calculates the area the pumping well would dewater in one year if there were no recharge at all. The assumption is then made that over the course of a year there would probably be enough recharge to balance the ground-water pumpage and the calculated distance is therefore a conservative estimate.

A fifth method for calculating the radius of influence, and perhaps the most useful when done correctly, is to construct a numerical model of ground-water flow in the aquifer. By accurately modeling the aquifer, leakage and recharge, boundaries and other hydrogeological features, a complete estimation can be made of the possible impact of a proposed diversion under steady-state conditions.

Radius-of-influence calculations are highly dependent upon the professional judgment of the person doing the calculations. It is advisable to calculate this value several different ways and to compare the results.

III.J. Regional Impacts

The applicant must investigate regional impacts of the requested diversion. The following section addresses some possible impacts which should be considered.

... III.J.1. Previous ground-water users

Any diversion may cause additional drawdown at nearby pumping centers. This well interference may be significant, depending on the hydrogeology of the area, volume of ground water involved, and distance to other pumping wells. Regulations require that existing ground-water users be free of adverse effects from new allocations. It is the responsibility of the applicant to show to what degree the new diversion will affect other ground-water users. Any process which lessens the ground-water yield of previously approved diversions may be viewed by BWA as adequate cause for denial of an application. The determination of adverse impact on other ground-water users may be made even in the absence of objections from other users.

... III.J.2. Saltwater intrusion

Some areas of the state are experiencing ground-water quality changes associated with saltwater intrusion. Pumpage near areas with water of elevated chloride concentrations may accelerate this degradation of water quality. Diversion applications near such areas must address the possibility of inducing saltwater into the proposed pumping well, or into other pumping wells. Saltwater intrusion may come from the ocean or from connate water already in or near an aquifer. The water may move laterally from a recharge area under the ocean, leak upward from an underlying formation (upconing), or leak down from an overlying formation containing saltwater. All of these possibilities should be considered.

... III.J.3. Environmental impacts

The applicant must show that the proposed diversion will not adversely affect the natural environment. The applicant must analyze the effect of the diversion on nearby surface waters and on their ecology.

... III.J.4. Dependable yield

The total amount of water withdrawn from an aquifer should not exceed the "dependable yield" of the aquifer (N.J.A.C. 7:19-6 *et seq.*). Many definitions have been offered for dependable yield. No one definition is suitable in all cases. Instead of dependable yield it may be better to use the term 'acceptable yield.' This is the yield which will not result in unacceptable effects on other ground-water and surface-water users and the environment.

An aquifer supplies water to wells by taking it from one or more of three sources. First, the aquifer could take in more water from its recharge zones. Second, the aquifer could allow less water to exit in discharge zones. Third, the water could be removed from storage in the aquifer by lowering water levels. All three of these sources could be adversely impacted by a diversion.

Calculating the acceptability of the proposed diversion is a three-step process. First, it requires estimating the effects of the withdrawal on water levels, recharge, and discharge. Next it requires estimating the effects of the changes on other ground-water users, stream flow, wetlands, polluted ground water, and any other point of concern. Third, the impacts upon each of the items defined in the second step must determined to be acceptable or unacceptable by the Bureau of Water Allocation.

The Water Allocation Permit procedures, as outlined in NJAC 7:19-1,2,3 *et seq.*, detail what is required by the

Bureau of Water Allocation and outlines the decision making process.

... III.J.5. Regional ground-water models

Ground-water models may be used to determine the regional impacts of a proposed diversion. The accurate development and appropriate use of a ground-water model requires an understanding of the geologic framework, hydrology, and hydraulic properties of the aquifer system. Many considerations must be taken into account when building a model. One important point is that the area the model covers affects the preciseness of results. In general, the larger the area covered, the less detail the model provides about any one particular point.

BWA does not routinely require using ground-water models for water-allocation permit applications. However, models may be employed by BWA or the applicant in specific, complex cases. If ground-water modeling is proposed, then it must be discussed in detail in the report to allow a thorough review by BWA.

III.K. Other Regulatory Considerations

The process of locating, testing, and gaining approval of a major water-supply well will be affected by a great number of regulatory programs. It is the responsibility of the applicant to identify and meet all regulatory requirements. The following discussion of programs is not exhaustive, but serves as a starting point. A thorough diversion application will identify all areas of concern and address them.

... III.K.1. Ground-water pollution

Any pumping near a ground-water pollution site which could cause movement of contaminated ground water, or cause interference with a remedial action scheme, is of great concern. Applicants should note the location of any nearby ground-water contamination sites. The Ground-Water Quality Management Element maintains an inventory of such sites. The applicant must evaluate the potential of contamination of the ground water to be produced by the well.

Ground-Water Impact Areas have been designated in some localities of widespread ground-water pollution. Additional restrictions or constraints may be placed on wells drilled in these areas. BWA maintains a list of these areas.

... III.K.2. Water-Supply Critical Areas

The Water-Supply Critical Area program restricts ground-water pumpage in several counties and aquifers in New Jersey. This program allows new pumping from the designated aquifers only after an extensive review of the water-supply needs and the potential impacts of the pumping. The Water Supply Element maintains maps delineating current Critical Areas and can provide explanations of any pumpage restrictions (N.J.A.C. 7:19-6).

... III.K.3. Environmentally sensitive areas

The application should investigate environmentally sensitive areas and estimate the impact of enhanced pumping on these areas. NJDEPE, along with regional planning commissions, maintains special regulations for certain environmentally sensitive areas in the state. NJDEPE maintains a distinct set of water-quality standards for the New Jersey Pinelands, where land use is regulated by the Pinelands Commission. Any ground-water withdrawals that could affect the Pinelands are reviewed by the Pinelands Commission in addition to the regular DEPE review. Within NJDEPE, the Division of Fish and Game may review an application to determine if the requested ground-water diversion will affect streamflow critical to wildlife.

... III.K.4. Bureau of Safe Drinking Water

The Bureau of Safe Drinking Water (BSDW) is responsible for protecting public-supply wells (N.J.A.C.7:10-11.1 and 12.1). Contacting BSDW at the beginning of the process of applying for such a well, and becoming familiar with its requirements, may prevent misunderstandings and delays later in the approval process.

... III.K.5. Local regulations

County and/or municipal regulations may affect the drilling of a well and conducting of an aquifer test. Possible areas of concern include the need for additional well permits, construction of access roads, sediment control, test requirements, and so on. The applicant should investigate what local regulations apply by contacting the county or local health department, engineering or planning department, and/or Soil Conservation District.

IV. ORGANIZATIONAL AND REGULATORY INFORMATION

The New Jersey Department of Environmental Protection and Energy, Water Supply Element, Bureau of Water Allocation is the office directly concerned with the issuance of permits for ground-water withdrawals. However, a series of other organizations may be involved during the process of obtaining an allocation permit. The following list is intended to be a guide to the State's regulatory organization. It is, however, not comprehensive.

The publication "Easy Access" is the offices directory for the New Jersey DEPE. It is very helpful when navigating through the sometimes bewildering array of Bureaus, Elements, Divisions and Programs. A copy of this report (which is referred to as 'Easy Access') can be obtained from:

Division of Financial Management and General Services
Department of Environmental Protection & Energy
CN 402
Trenton, NJ 08625 (609) 292-1553

IV.A. Organizational Structure

The New Jersey Department of Environmental Protection and Energy (NJDEPE or DEPE) is divided into several Divisions and Programs. These in turn are subdivided. Figure 3 (page 24) is an organizational chart of some of the DEPE bureaus an applicant for a ground-water allocation is likely to encounter.

Occasionally the Department reorganizes. The divisional breakdown listed here, as well as the telephone numbers, were current in March 1992.

IV.B. Regulatory Authorization

A wide range of regulations has been promulgated giving the NJDEPE authority over environmental matters. A partial listing is given in table 5. The applicant must ascertain which programs are relevant to his or her specific situation. A staff member of one program may not be able to, nor should be expected to, give guidance concerning a different program.

State Organizations

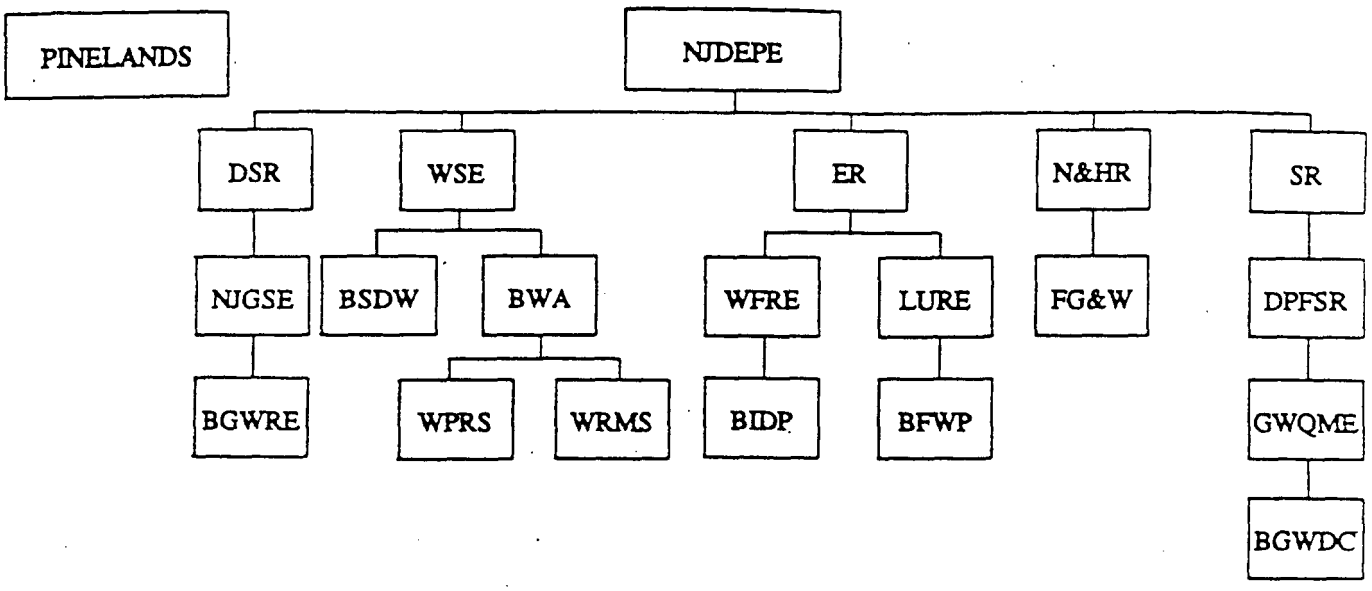

ABBREVIATION	BUREAU/ORGANIZATION	PHONE*
BFWP	Bureau of Freshwater Wetlands Permits	633-6563
BGWDC	Bureau of Ground-Water Discharge Control	292-0424
BGWRE	Bureau of Ground-Water Resources Evaluation	984-6587
BIDP	Bureau of Industrial Discharge Permits	292-4860
BSDW	Bureau of Safe Drinking Water	292-5550
BWA	Bureau of Water Allocation	292-2957
DPFSR	Division of Publicly Funded Site Remediation	292-9120
DSR	Division of Science and Research	984-6070
ER	Environmental Regulation	292-2795
FG&W	Division of Fish, Game & Wildlife	292-2965
GWQME	Ground-Water Quality Management Element	292-5262
LURE	Land Use Regulation Element	984-3444
NJDEPE	New Jersey Deparment of Environmental Protection & Energy	292-3131
NJGSE	New Jersey Geological Survey Element	292-1185
N&HR	Natural and Historical Resources	292-3541
Pinelands	Pinelands Commission	894-9344
SR	Site Remediation	292-9120
WFRE	Wastewater Facilities Regulation Element	292-4543
WPRS	Well Permit and Regulation Section	984-6831
WRMS	Water Resources Management Section	292-2957
WSE	Water Supply Element	292-7219

* All phone numbers-current as of March 1992 and in area code 609.

Figure 3. Partial organizational chart of state agencies.

Table 5. Programs and regulations applicable to aquifer testing and water-supply wells.

Bureau of Water Allocation programs:

PROGRAM	REGULATIONS
Water Allocation permits	N.J.A.C. 7:19-1,2,3 *et seq.*
Water Allocation general management regulations	N.J.A.C. 7:19-6
Sealing of abandoned wells	N.J.A.C. 7:9-9
Agricultural water use certifications	N.J.A.C. 7:20A-1,2

Bureau of Safe Drinking Water Programs:

PROGRAM	REGULATIONS
Physical connection permits	N.J.A.C. 7:10-1 *et seq.*
Standards for the construction of public non-community and non-public water systems	N.J.A.C. 7:10-12.1 *et seq.*
Standards for the construction of public community water systems	N.J.A.C. 7:10-11.1 *et seq.*
Surface-water quality standards	N.J.A.C. 7:9-4.15
Ground-water quality standards	N.J.A.C. 7:9-6

Wastewater Facilities Regulation Element programs:

PROGRAM	REGULATIONS
New Jersey Pollution Discharge Elimination System	N.J.A.C. 7:14A-1.1 *et seq.*
Discharge permits	N.J.A.C. 7:14A-1.1 *et seq.*

Land Use Regulation Element programs:

PROGRAM	REGULATIONS
Freshwater wetlands	N.J.A.C. 7:7A-1 *et seq.*

Pinelands Commission programs:

PROGRAM	REGULATIONS
Pinelands Management Act	N.J.A.C. 7:50-4,5,6

V. REFERENCES

Bear, Jacob, 1979, Hydraulics of groundwater: New York, McGraw-Hill International, 567 p.

Bentall, Ray, compiler, 1963a, Methods of determining permeability, transmissibility and drawdown: U.S. Geological Survey Water-Supply Paper 1536-I, p. I243-I341.

—1963b, Shortcuts and special problems in aquifer tests: U.S. Geological Survey Water-Supply Paper 1545-C, p. C1-C117.

Boulton, N. S., and Streltsova, T. D., 1977, Unsteady flow to a pumped well in a fissured water-bearing formation: Journal of Hydrology, v. 35, p. 257-269.

—1978, Unsteady flow to a pumped well in an unconfined fissured aquifer: Journal of Hydrology, v. 37, p. 349-363.

Bouwer, Herman, 1978, Groundwater hydrology: New York, McGraw-Hill, 480 p.

Brereton, N. R., 1979, Step-drawdown pumping tests for the determination of aquifer and borehole characteristics: Technical Report TR 103, Water Research Centre, Resources Division, Medmenham Laboratory, Medmenham, England, 25 p.

Buchanan, T. J., and Somers, W. P., 1969, Discharge measurements at gaging stations: Techniques of Water-Resources Investigations of the U.S. Geological Survey, Book 3, Chapter A8, 65 p.

Clark, L., 1979, The analysis and planning of step drawdown tests: Quarterly Journal of Engineering Geology, v. 10, no. 2, p. 125-143.

Driscoll, F. G., 1986, Groundwater and wells: St. Paul, Minnesota, Johnson Division, 1088 p.

Edelman, J. H., 1972, Groundwater hydraulics of extensive aquifers: International Institute for Land Reclamation and Improvement, Wageningen, The Netherlands, Bulletin 13, 216 p.

Eden, R. N., and Hazel, C. P., 1973, Computer and graphical analysis of variable discharge pumping tests of wells: Civil Engineering Transactions, Institute of Engineers Australia, p. 5-10.

Ferris, J. G., Knowles, D. B., Brown, R. H., and Stallman, R. W., 1962, Theory of aquifer tests: U.S. Geological Survey Water-Supply Paper 1536-E, p. E69-E174.

Fetter, C. W., Jr., 1980, Applied hydrogeology: Columbus, OH, Charles E. Merrill, 488 p.

Freeze, R. A., and Back, William, editors, 1983, Physical hydrogeology: Benchmark Papers in Geology, v. 72, 431 p.

Freeze, R. A., and Cherry, J. A., 1979, Groundwater: Englewood Cliffs, NJ, Prentice-Hall, 604 p.

Gringarten, A. C., 1982, Flow-test evaluation of fractured reservoirs, *in* Recent trends in hydrogeology: Geological Society of America Special Paper 189, p. 237-263.

Gringarten, A. C., and Witherspoon, P. A., 1972, A method of analyzing pumping test data from fractured aquifers: Proceedings of the Symposium on Percolation through Fissured Rock, International Society for Rock Mechanics and the International Society of Engineering Geology, Stuttgart, Germany, T3, p. B1-B9.

Hantush, M. S., 1966, Analysis of data from pumping tests in anisotropic aquifers: Journal of Geophysical Research, p. 421-426.

Heath, R. C., 1983, Basic ground-water hydrology: U.S. Geological Survey Water-Supply Paper 2220, 85 p.

Houlden, L. J., 1984, Analysis of aquifer test data with special reference to fractured rock aquifers in South Africa: Proceedings of the International Conference on Ground Water Technology, Johannesburg, South Africa, v. 2, p. 656-702.

Jacob, C. E., 1946, Drawdown test to determine the effective radius of an artesian well: Proceedings of the American Society of Chemical Engineers, v. 72, no. 5.

Jenkins, J. D., and Prentice, J. K., 1982, Theory for aquifer test analysis in fractured rock under linear (non-radial) flow conditions: Ground Water, v. 20, p. 12-21.

Kruseman, G. P., de Ridder, N. A., and Verweij, A.W., 1990, Analysis and evaluation of pumping test data (2nd edition): International Institute for Land Recla-

mation and Improvement, Wageningen, The Netherlands, Bulletin 47, 377 p.

Labadie, J. W., and Helweg, O. J., 1975, Step drawdown test analysis by computer, Ground Water, v. 13, no. 5, p. 438-444.

Lennox, D. H., 1966, Analysis and application of step drawdown pumping tests: Journal of Hydraulics Division of the American Society of Chemical Engineers, HY6, p. 25-48.

Lohman, S. W., 1972, Ground-water hydraulics: U.S. Geological Survey Professional Paper 708, 70 p.

Lloyd, J. W., editor, 1981, Case-studies in groundwater resources evaluation: Clarendon Press, Oxford, 206 p.

Nahm, G. Y., 1980, Estimating transmissivity and well loss constant using multirate test data from a pumped well: Ground Water, v. 18, no. 3, p. 281-285.

Neuman, S. P., Walter, G. R., Bentley, H. W., Ward, J. J., and Gonzalez, D. D., 1984, Determination of horizontal aquifer anisotropy with three wells: Ground Water, v. 22, no. 1, p. 66-72.

Papadopulos, I. S., 1965, Nonsteady flow to a well in an infinite anisotropic aquifer: Proceedings of the Symposium on Hydrology of Fractured Rocks, Dubrovnik, International Association of Scientific Hydrology, p. 21-31.

Reed, J. E., 1980, Type curves for selected problems of flow to wells in confined aquifers: Techniques of Water-Resources Investigations of the United States Geological Survey, Book 3, Chapter B3, 106 p.

Rorabaugh, M. I., 1953, Graphical and theoretical analysis of step-drawdown test of artesian wells: Proceedings of ASCE, v. 79, no. 362, p. 362-1 to 362-23.

Sauveplane, C., 1984, Pumping test analysis in fractured aquifer formations; state of the art and some perspectives: Ground Water Hydraulics, Water Resources Monograph Series 9, p. 171-206.

Serfes, M. E., 1987, Interpretation of tidally affected ground-water flow systems in pollution studies, *in* Proceedings Petroleum Hydrocarbons and Organic Chemicals in Ground Water; Prevention, Detection and Restoration - A Conference and Exposition: National Water Well Association, Dublin, OH, p. 55-73.

Sheahan, N. T., 1971, Type curve solution of step drawdown tests: Ground Water, v. 9, no. 1, p. 25-29.

Sternberg, Y. M., 1968, Simplified solution for variable rate pumping test: Journal of the Hydraulics Division of the American Society of Chemical Engineers, HY1, p. 177-180.

Stallman, R. W., 1971, Aquifer-test design, observation, and data analysis: Techniques of Water-Resources Investigations of the United States Geological Survey, Book 3, Chapter B1, 26 p.

U.S. Dept. of Interior, 1985, Ground Water Manual: Denver, CO, Bureau of Reclamation, Engineering and Research Center, 480 p.

U.S. Geological Survey, 1977, National handbook of recommended methods for water-data acquisition: Office of Water Data Coordination, Reston, VA, various paging.

Way, S. C., and McKee, C. R., 1982, In situ determination of three-dimensional aquifer permeabilities: Ground Water, v. 20, no. 5, p. 594-603.

Ordering information (current as of July 1991)

N.J. Geological Survey publications may be ordered from:

Maps and Publications Sales Office
Bureau of Revenue
CN-417
Trenton, NJ 08625
phone: (609) 777-1038

U.S. Geological Survey publications may be ordered from:

USGS Books and Reports Section
Box 25425
Denver, CO 80225
phone: (303) 236-7476

APPENDIX
AQUIFER-TEST-ANALYSIS PROCEDURES

Based on hydrogeologic and test conditions, water levels can respond to an aquifer test in a variety of ways. Understanding the physical system must precede data analysis to prevent the use of an inappropriate technique. The following sections discuss the types of aquifers, aquifer tests, and some of the assumptions required by the analysis techniques.

TYPES OF AQUIFERS

An aquifer is a saturated hydrogeologic unit able to yield significant quantities of water to a well or spring. Aquifers are commonly classified as unconfined, confined, or semiconfined. This classification is based on the hydrogeologic properties of the units overlying and underlying the aquifer and the water level in the aquifer in relation to the top of the aquifer. Water levels in the three different types of aquifers respond differently to pumping.

Additionally, aquifers are classified by lithologic characteristics. Features such as degree of consolidation, amount of fracturing, and type of porosity are used to convey information about a unit's hydrogeologic properties. On this basis, aquifers are broadly classified as unconsolidated aquifer types or bedrock aquifer types.

Confined Aquifers

A confined aquifer is overlain and underlain by relatively impermeable units through which ground-water flow is nonexistent or negligible. All voids in the aquifer are filled with water at a pressure greater than atmospheric. The potentiometric head in the confined aquifer is at a level higher than the top of the aquifer.

During aquifer and multiple-well tests, the potentiometric head in the confined aquifer remains above the top of the aquifer; no dewatering of the aquifer occurs. Recharge to the aquifer from overlying or underlying units is minimal. All water produced by the well comes from water moving laterally in the aquifer towards pumping centers.

Unconfined Aquifers

An unconfined aquifer is bounded above by the water table, not an impermeable unit. The potentiometric head in the aquifer is at the elevation of the water table.

During an aquifer or multiple-well test, the water level falls in response to pumping. Declines in water-level release water from storage. This water, along with water already moving laterally through the aquifer, is the source of water which is discharged from a pumping well.

If, during the course of an aquifer test in an unconfined aquifer, the water-table elevation changes by less than 5 percent of the saturated thickness, the data may be suitable for analysis by a confined-aquifer method. This decision is at the discretion of the hydrogeologist analyzing the data. Otherwise, the change in saturated thickness of the aquifer caused by drawdown during the test must be accounted for in the analysis of the data.

Semiconfined Aquifers

A semiconfined aquifer is similar to a confined one except that the overlying and/or underlying units are not impermeable; a limited volume of ground water flows through them into the aquifer. All voids in the aquifer are filled with water which is at a pressure greater than atmospheric. The potentiometric head in the aquifer is above the top of the aquifer.

During an aquifer or multiple-well test, the potentiometric head remains above the top of the semiconfined aquifer; no dewatering occurs. Recharge from overlying or underlying units depends upon the drawdown in the semiconfined aquifer and the permeability of the confining units. Water produced by the well comes either from water moving laterally in the aquifer towards pumping centers or from leakage from the underlying and/or overlying units.

A semiconfined aquifer can be recognized in at least three ways. (1) Lithologic information on the confining units may indicate that the units are not fully confining and may allow some leakage. (2) Water levels in the presumed semiconfining units or the layers directly overlying or underlying them may change during the aquifer test. If the water level in a semiconfining unit changes by 5 percent or more of its thickness, and this change can be attributed to pumping from the underlying aquifer, then this layer is presumed to be contributing water to the underlying aquifer. In such cases a methodology applicable to semiconfined aquifers must be used when analyzing all test data. (3) The

observed drawdown data may match theoretical type curves. If the data fit a theoretical semiconfined-aquifer type curve and not the confined-aquifer type curve, then the aquifer probably is semiconfined.

As a general principle, it is always advisable to attempt to fit observed data to both confined and semiconfined type curves. This lessens the probability of neglecting any vertical leakage.

Unconsolidated Aquifers

Unconsolidated aquifers are generally gravel and sand deposits interbedded with relatively minor amounts of silt and clay. The materials may be compacted somewhat, but lithification due to cementation is minor or absent. The deposits retain much of their original intergranular porosity. Overall permeability of an unconsolidated aquifer can be strongly influenced by any continuous silt or clay layers in the deposit.

Consolidated Aquifers

In a consolidated aquifer, the grains are cemented or compacted into a firm and cohesive mass. Consolidated aquifers are also called bedrock aquifers. Consolidated aquifers can be made up of igneous, metamorphic, or sedimentary rock.

Secondary porosity is generally the prime mechanism for ground-water movement in consolidated aquifers, though primary porosity may be present in some clastic sedimentary rocks. The porosity of consolidated aquifers tends to be much lower than that of unconsolidated aquifers. Joints and other fractures are the most common source of secondary porosity. In carbonate rock aquifers, chemical dissolution is another source of porosity. The distribution and orientation of the secondary-porosity structures can be the dominant factors in controlling the hydrogeologic characteristics of the aquifer. The most common phenomena observed during aquifer tests are anisotropy and complex responses in storage behavior.

TYPES OF AQUIFER TESTS

Steady and Unsteady Aquifer Tests

Aquifer tests are divided into two types, steady state and unsteady state, based on observed drawdown in the pumping well or in an observation well.

In a steady-state test, water levels do not change with time; they have reached a stable level which balances pumpage with water flowing to the pumping well. Commonly, data from steady-state tests are used in a distance-drawdown analysis method, which requires data from more than one observation well.

An unsteady-state test utilizes drawdown data gathered during the fall of water levels immediately following the start of the pump. Usually the data are plotted one well at a time, with observed drawdown plotted against elapsed time. The tests are said to be unsteady-state tests because the water levels have not reached equilibrium. In an unsteady-state test the changing water levels from one well are analyzed to yield aquifer properties.

The question of exactly when water levels in a well reach a steady (or equilibrium) state is often debated. If the aquifer being tested is a true confined aquifer, then it will theoretically never reach equilibrium. Certainly, when the rate of drawdown has slowed to inches per day the water level could be considered to be close to steady state.

No specific rate of decline is established here to define stabilization. A judgment that stabilization has been reached is a decision based on the slope of the time/drawdown plot(s). An often-used standard is an average decline in water level in an observation well of 1 to 1.5 inches per hour. The Bureau of Safe Drinking Water considers stabilization to have occurred if drawdown has been less than 6 inches over a six hour period. By testing equilibrium versus nonequilibrium solutions on the data, the applicant can determine if the correct assessment has been made.

Good references for the theory, design, and analysis of aquifer tests are Bentall (1963a, 1963b), Ferris and others (1962), Kruseman and others (1990), Lohman (1972), Reed (1980), and Stallman (1971).

Testing of Bedrock Aquifers

The theory underlying the aquifer tests mentioned above assumes that the aquifer is homogeneous and, usually, isotropic. This is frequently not the case for fractured-bedrock aquifers. An additional limiting factor is that most analytic methods are best suited for unconsolidated aquifers which have well defined overlying and underlying boundaries. In a consolidated formation of unknown depth, the effective aquifer thickness can be open to question.

Because of these limiting factors, the analytical techniques developed for confined, unconfined and semiconfined conditions are most accurately applied to unconsolidated aquifers. A separate set of solutions has been developed for fractured bedrock aquifers.

Choice of Testing Methodology
No rigid guidelines are established here to indicate which specific technique to use in each situation; often more than one method is available. Tables 6, 7, and 8 (pages 31, 32, 33) list analytical techniques that are appropriate under various hydrogeologic conditions. Each technique is applicable under specific sets of assumptions. The applicant should attempt to satisfy the assumptions associated with the analytical technique before applying it in the aquifer-test evaluation.

Assumptions and Common Violations
All methods of analyzing aquifer test data require some assumptions as to the hydrogeologic nature of the aquifer and the nature of the test. The assumptions are rarely entirely satisfied.

Basic Assumptions
The first aquifer-test-analysis methods developed were applicable to a specific type of aquifer. This aquifer is assumed to be:

- confined;
- homogeneous (all parts of the aquifer are exactly the same as all other parts);
- isotropic (the hydrogeologic properties of the aquifer are constant regardless of the direction of ground-water flow);
- areally infinite (has no boundaries) and of uniform thickness;
- all monitoring and observation wells fully penetrate the aquifer and are fully screened;
- the pumping rate is constant throughout the test;
- storage of water is negligible;
- water removed from storage is discharged immediately once the head declines, and;
- prior to pumping the potentiometric surface is horizontal.

Subsequent work has addressed the following common violations of these basic assumptions:

Partially-Penetrating Wells
If the pumping well fully penetrates the confined aquifer, then ground-water flow towards the pumping well is horizontal. For the purposes of these guidelines, a well is considered to fully penetrate the aquifer if it is screened through 80 percent or more of the aquifer's saturated thickness. If it is screened through a smaller percentage, vertical flow in the aquifer may affect water levels in nearby observation wells. If the pumping well does not meet the criteria for a fully penetrating well, then the aquifer-test-analysis method used should be appropriate to a partially-penetrating well situation.

In general, the closest observation well should be at a distance of 1.5 times the saturated thickness of the aquifer from a partially-penetrating pumping well to avoid problems associated with vertical water flow near the well screen.

Variable Discharge Rate
One assumption often violated is that there is no variation of the pumping rate during the aquifer test. A constant pumping rate is very hard to achieve. For the purpose of these guidelines, if the pumpage does not vary by more than 10 percent during the test it can be considered to be at a constant rate.

To hold the pumping-rate variation to a minimum it is recommended that the pump work against a partially closed discharge valve. This valve can be progressively opened to maintain a constant discharge rate as the pump output falls off due to the extra lift required as the water level drops. A valve also permits varying the output to reduce the effects of mechanical, atmospheric or electrical variations.

If the pumping rate does vary significantly, a suitable methodology must be used to analyze the data. For a confined aquifer, where the saturated thickness does not change, the principle of superposition can be used to account for variations in pumpage rates. For more detail see Eden and Hazel (1973) and Jacob (1946).

The step test is a special case of the variable-discharge-rate aquifer test. This test is performed in order to analyze the efficiency of the well at different pumping rates. For more detail see Brereton (1979), Clark (1979), Labadie and Helweg (1975), Lennox (1966), Nahm (1980), Rorabaugh (1953), Sheahan (1971), and Sternberg (1968).

Delayed Yield
In an unconfined aquifer, water is discharged from aquifer storage as the water level declines. This change in storage may not occur instantaneously, but is prolonged by the time required to drain openings above the saturated zone. Delayed yield is the process that yields water to the pumping well after the water level has declined, before steady state has been reached.

Delayed yield of water may flatten out the drawdown curve and simulate a steady-state condition. However, once delayed yield is over, water levels may drop again until a steady state is achieved.

Delayed yield should be considered and accounted for in all unconfined-aquifer tests. This may require extending the length of the test, sometimes to many days. If lengthening the test is not practical, the long-term effects of delayed yield should be evaluated by an alternate method in order to assess long-term drawdown.

Aquifer Boundaries

If an aquifer test is conducted near a boundary of an aquifer, that boundary may affect observed water levels. A no-flow boundary (one which contributes no ground-water flow) increases drawdown. Such boundaries can be detected in the time/drawdown data as a sudden water-level decline in one or more observation wells.

A constant head boundary (such as a perennial stream) may contribute significant recharge to the aquifer, lessening drawdown. Such a boundary is usually evidenced in the time/drawdown data by sudden stabilization of water levels.

Boundaries such as these may be accounted for in the analysis by the use of image wells and the principle of superposition. The details are covered in many basic ground-water texts.

Anisotropic Aquifers

An aquifer whose hydrogeologic properties vary in different directions is said to be anisotropic. In rock aquifers which trend in a preferential direction, for instance, anisotropy may be an extremely important factor governing ground-water flow. Such flow can be accounted for if the principle directions of anisotropy are known. Anisotropy may be identified on the basis of geologic evidence or predominant drawdown directions. If anisotropy affects water levels during an aquifer test, calculated aquifer properties may be inaccurate for the aquifer as a whole, but may be useful to describe effects in a specific direction.

Multiple-Well Tests

In a confined aquifer the principle of superposition can be used to analyze the effect of several wells pumping simultaneously. Theoretically, the total drawdown is the simple sum of the drawdown caused by each individual pumping well.

In an unconfined aquifer this principle cannot be used. More complex methods, such as those based on a computer model, may be required.

The strength of a multiple-well test is that it measures actual drawdowns under anticipated everyday operating conditions. The usual goal of a multiple-well test is not to estimate aquifer properties, but to predict drawdowns at important points (at other wells, streams, or wetlands, for example) at key times. Thus, analysis of these tests is often a matter of plotting drawdowns and analyzing actual effects, rather than engaging in a formal mathematical treatment.

Fractured-Rock aquifers

In a fractured rock aquifer, the aquifer matrix is largely impermeable. Instead, fractures and other structural features in the rock provide the major conduits for movement of fluids.

Typically, analytic techniques focus on a dominant characteristic or feature of the aquifer, such as a long, well-developed fracture zone, with boundaries or other aquifer properties idealized and assigned constant values. Some approaches conceptualize fractures as important for movement of ground water, but relatively insignificant as reservoirs of ground-water storage. These methods assume the bulk of ground-water storage comes from the aquifer matrix. Other approaches consider ground-water storage in both the fractures and in the aquifer matrix.

Table 8 (page 33) highlights methodologies that address specific features of fractured-rock aquifers, such as anisotropy, effects of storage release, and contrasts in transmissivities of the bulk aquifer matrix and fractures. Originally developed for analysis of granular aquifers, the anisotropy methodologies listed in table 8 have practical application in fractured-rock settings where the test conditions do not seriously compromise the boundary conditions specified in the conventional analysis of transmissivity and storativity.

The other methodologies listed in table 8 are analytical techniques directed at phenomena customarily observed in fractured-rock aquifers. The double-porosity models address the relative roles of fractures and the aquifer matrix (or "block") as sources of ground-water storage. The release of water from these sources results in a time-drawdown response which appears similar to the delayed-yield response of unconfined aquifers. The single-fracture models focus on interaction of the aquifer matrix and a fracture penetrated by a production well. For wells located on a fracture or fracture system, the early time-drawdown data often exhibit a diagnostic half-slope (0.5) on a log-log plot.

There are excellent overviews of these analytic methods and examples of their application in Sauveplane (1984) and Houlden (1984).

In some cases fractured rock aquifers may be analyzed as unconfined aquifers because they exhibit similar time/drawdown characteristics. During the early part of a test the fractures contribute water to the well. During the midsection part, pores and smaller fractures are de-

watered, leading to the appearance of delayed yield. During the late part of the test water comes to the well from fractures farther away.

Much work has been done trying to systematize the analysis of fractured-rock aquifer tests. As examples, see Boulton and Streltsova (1977, 1978), Gringarten (1982), Gringarten and Witherspoon (1972), Hantush (1966), Houlden (1984), Jenkins and Prentice (1982), Neuman and others (1984), Papadopulos (1965), Sauveplane (1984), and Way and McKee (1982).

Solution-Channeled Limestone and Dolomite Aquifers

Fractured, solution-channeled limestone and dolomite rocks may pose specific hydrogeological conditions. Weathered carbonate rocks normally contain cavernous zones developed as a result of chemical dissolution along joints, bedding planes, and other planar surfaces. Solution mechanisms in carbonate rocks favor the development of larger openings at the expense of smaller ones. Thus, some of the analytical methods that focus on long, well developed fractures may be particularly applicable to solution-channeled aquifers. The block-and-fissure model used to describe fractured rock aquifers may be particularly useful in carbonate aquifers where solution-channel development is significant.

Carbonate rocks can be highly anisotropic and nonhomogeneous on a localized scale, but may behave more homogeneously on a regional scale. In many cases solution-channeled aquifers behave like fractured-rock aquifers and can be analyzed as such. In general, methods that recognize water table and/or leaky artesian conditions may be extremely useful in analyzing aquifer tests in fractured and solution-channeled carbonate-rock aquifers.

Table 6. Types of aquifer-test analyses for 'uncomplicated' situations (modified from Kruseman and DeRidder, 1979, who describe and reference all of the methodologies).

Assumptions: Aquifer is homogeneous, isotropic, areally infinite, and of uniform thickness. Pumping and observation wells fully penetrate and screen the aquifer. Prior to pumping the piezometric surface is horizontal. Discharge rate is constant and storage in the well can be neglected. Water removed from storage is discharged instantaneously with decline of head.

AQUIFER TYPE	TYPE OF SOLUTION	NAME OF SOLUTION	METHOD OF SOLUTION
confined	steady-state	Thiem	calculation
	unsteady-state	Theis	curve fitting
		Chow	nomogram
		Jacob	straight line
		Theis recovery	straignt line
semiconfined	steady-state	DeGlee	curve fitting
		Hantush Jacob	straight line
		Ernst modification of Thiem method	calculation
	unsteady-state	Walton	curve fitting
		Hantush I	inflection point
		Hantush II	inflection point
		Hantush III	curve fitting
unconfined with delayed yield	unsteady-state	Boulton	curve fitting
semiunconfined with delayed yield	unsteady-state	Boulton	curve fitting
unconfined	steady-state	Thiem-Dupuit	calculation
	unsteady-state	Thiem*	calculation
		Theis*	
		Chow*	
		Jacob*	

* Solutions for the confined, unsteady-state case can be applied to the unconfined, unsteady-state case only if the drawdown is modified by an appropriate factor. See Kruseman and DeRidder, 1979, for more detail.

Table 7. Types of aquifer-test analyses for 'complicated' situations (modified from Kruseman and De Ridder, 1979, who describe and reference all of the methodologies).

Assumptions: Aquifer is homogeneous, isotropic, areally infinite, and of uniform thickness. Pumping and observation wells fully penetrate and screen the aquifer. Prior to pumping the piezometric surface is horizontal. Discharge rate is constant and storage in the well can be neglected. Water removed from storage is discharged instantaneously with decline of head.

Modified assumption	Aquifer type	Type of solution	Name of solution	Method of solution
aquifer crossed by one or more fully penetrating recharge or barrier boundries	confined or unconfined	steady-state	Dietz	calculation
		unsteady-state	Stallam	curve fitting
			Hantush	straight line image
aquifer homogeneous, anisotropic and of uniform thickness	confined or unconfined	unsteady-state	Hantush	calculation
			Hantush - Thomas	calculation
	semiconfined	unsteady-state	Hantush	calculation
aquifer homogeneous and isotropic but thickness varies exponentially	confined	unsteady-state	Hantush	curve fitting
prior to pumping the potentiometric surface slopes	unconfined	steady-state	culmination	calculation point
		unsteady-state	Hantush	curve fitting
discharge rate variable	confined or unconfined	unsteady-state	Cooper-Jacob	straight line
			Aron-Scott	straight line
			Sternberg	straight line
			Sternberg recovery	straight line
partially penetrating pumping well	confined	steady-state	Huisman correction I and II	calculation
			Jacob correction	calculation
	semiconfined	steady-state	Huisman correction I and II	calculation
	unconfined	steady-state	Hantush correction	calculation
	confined	unsteady-state	Hantush modification of Theis	curve fitting
			Hantush modification of Jacob	straight line
two-layered aquifer with semipervious dividing layer	semiconfined	steady-state	Huisman-Kemperman	nomograph and curve fitting
			Bruggeman	straight line

United States Environmental Protection Agency | Office of Research and Development | Office of Solid Waste and Emergency Response | EPA/540/S-93/503 February 1993

EPA Ground Water Issue

Suggested Operating Procedures for Aquifer Pumping Tests

Paul S. Osborne*

The Regional Superfund Ground Water Forum is a group of ground-water scientists, representing EPA's Regional Superfund Offices, organized to exchange up-to-date information related to ground water remediation at Superfund sites.

A very important aspect of ground water remediation is the capability to determine accurate estimates of aquifer hydraulic characteristics. This document was developed to provide an overview of all the elements of an aquifer test to assist RPMs and OSCs in the initial design of such tests or in the review of tests performed by other groups.

For further information, contact Jerry Thornhill, RSKERL-Ada, 405/436-8604 or Paul Osborne, EPA Region VIII, 303/293-1418.

INTRODUCTION

In recent years, there has been an increased interest in ground water resources throughout the United States. This interest has resulted from a combination of an increase in ground water development for public and domestic use; an increase in mining, agricultural, and industrial activities which might impact ground water quality; and an increase in studies of already contaminated aquifers. Decision-making agencies involved in these ground water activities require studies of the aquifers to develop reliable information on the hydrologic properties and behavior of aquifers and aquitards.

The most reliable type of aquifer test usually conducted is a pumping test. In addition, some site studies involve the use of short term slug tests to obtain estimates of hydraulic conductivity, usually for a specific zone or very limited portion of the aquifer. It should be emphasized that slug tests provide very limited information on the hydraulic properties of the aquifer and often produce estimates which are only accurate within an order of magnitude. Many experts believe that slug tests are much too heavily relied upon in site characterization and contamination studies. This group of professionals recommends use of slug testing during the initial site studies to assist in developing a site conceptual model and in pumping test design.

This document is intended as a primer, describing the process for the design and performance of an "aquifer test" (how to obtain reliable data from a pumping test) to obtain accurate estimates of aquifer parameters. It is intended for use by those professionals involved in characterizing sites which require corrective action as well as those which are proposed for ground water development, agricultural development, industrial development, or disposal activities. The goal of the document is to provide the reader with a complete picture of all of the elements of aquifer (pumping) test design and performance and an understanding of how those elements can affect the quality of the final data.

The determination of accurate estimates of aquifer hydraulic characteristics is dependent on the availability of reliable data from an aquifer test. This document outlines the planning, equipment, and test procedures for designing and conducting an accurate aquifer test. The design and operation of a slug test is not included in this document, although slug tests are often run prior to the design and implementation of an aquifer test. The slug test information can be very useful in developing the aquifer test design (see ASTM D-18

* *Regional Ground Water Expert, U.S. EPA, Region VIII*

Superfund Technology Support Center for Ground Water

Robert S. Kerr Environmental Research Laboratory
Ada, Oklahoma

Technology Innovation Office
Office of Solid Waste and Emergency Response, US EPA, Washington, DC

Walter W. Kovalick, Jr., Ph.D.
Director

Printed on Recycled Paper

Committee, D4050 and D4104). If an accurate conceptual model of the site is developed and the proper equipment, wells, and procedures are selected during the design phase, the resulting data should be reliable. The aquifer estimates obtained from analyzing the data will, of course, depend on the method of analysis.

This document is not intended to be an overview of aquifer test analysis. The analysis and evaluation of pumping test data is adequately covered by numerous texts on the subject (Dawson and Istok, 1991; Kruseman and de Ridder, 1991; Walton, 1962; and Ferris, Knowles, Brown, and Stallman, 1962). It should be emphasized, however, that information on the methods for analyzing test data should be reviewed in detail during the planning phase. This is especially important for determining the number, location, and construction details for all wells involved in the test.

A simple "pump" (specific capacity) test involves the pumping of a single well with no associated observation wells. The purpose of a pump test is to obtain information on well yield, observed drawdown, pump efficiency, and calculated specific capacity. The information is used mainly for developing the final design of the pump facility and water delivery system. The pump test usually has a duration of 2 to 12 hours with periodic water level and discharge measurements. The pump is generally allowed to run at maximum capacity with little or no attempt to maintain constant discharge. Discharge variations are often as high as 50 percent. Short-term pump tests with poor control of discharge are not suitable for estimating parameters needed for adequate aquifer characterization. If the pump test is, however, run in such a way that the discharge rate varies less than 5 percent and water levels are measured frequently, the test data can also be used to obtain some reliable estimates of aquifer performance. It should be emphasized that an estimate of aquifer transmissivity obtained in this manner will not be as accurate as that obtained using an aquifer test including observation wells.

By controlling the discharge variation and pumping for a sufficient duration, it is possible to obtain reliable estimates of transmissivity using water level data obtained during the pump test. However, this method does not provide information on boundaries, storativity, leaky aquifers, and other information needed to adequately characterize the hydrology of an aquifer. For the purpose of this document, an aquifer test is defined as a controlled field experiment using a discharging (control) well and at least one observation well.

The aquifer test is accomplished by applying a known stress to an aquifer of known or assumed dimensions and observing the water level response over time. Hydraulic characteristics which can be estimated, if the test is designed and implemented properly, include the coefficient of storage, specific yield, transmissivity, vertical and horizontal permeability, and confining layer leakage. Depending on the location of observation wells, it may be possible to determine the location of aquifer boundaries. If measurements are made on nearby springs, it may also be possible to determine the impact of pumping on surface-water features.

TEST DESIGN

Adequate attention to the planning and design phase of the aquifer pumping test will assure that the effort and expense of conducting a test will produce useful results. Individuals involved in designing an aquifer test should review the relevant ASTM Standards relating to: 1) appropriate field procedures for determining aquifer hydraulic properties (D4050 and D4106); 2) selection of aquifer test method (D4043); and 3) design and installation of ground water monitoring wells (D5092). The relevant portions of these standards should be incorporated into the design.

All available information regarding the aquifer and the site should be collected and reviewed at the commencement of the test design phase. This information will provide the basis for development of a conceptual model of the site and for selecting the final design. It is important that the geometry of the site, location and depth of observation wells and piezometers, and the pumping period agree with the mathematical model to be used in the analysis of the data. A test should be designed for the most important parameters to be determined, and other parameters may have to be de-emphasized.

Aquifer Data Needs

The initial element of the test design, formulating a conceptual model of the site, involves the collection and analysis of existing data regarding the aquifer and related geologic and hydrologic units. All available information on the aquifer itself, such as saturated thickness, locations of aquifer boundaries, locations of springs, information on all on-site and all nearby wells (construction, well logs, pumping schedules, etc.), estimates of regional transmissivities, and other pertinent data, should be collected. Detailed information relating to the geology and hydrology is needed to formulate the conceptual model and to determine which mathematical model should be utilized to estimate the most important parameters. It is also important to review various methods for the analyses and evaluation of pumping test data (Ferris, Knowles, Brown, and Stallman, 1962; Kruseman and De Ridder, 1991; and Walton, 1962 and 1970). Information relating to the various analytical methods and associated data needs will assist the hydrologist in reviewing the existing data, identifying gaps in information, and formulating a program for filling any gaps that exist.

The conceptual model of the site should be prepared after carrying out a detailed site visit and an evaluation of the assembled information. The review of available records should include files available from the U. S. Geological Survey, appropriate state agencies, and information from local drillers with experience in the area. Formulation of a conceptual model should include a brief analysis of how the local hydrology/geology fits into the regional hydrogeologic setting.

<u>Aquifer Location</u>

The depth to, thickness of, areal extent of, and lithology of the aquifer to be tested should be delineated, if possible.

<u>Aquifer Boundaries</u>

Nearby aquifer discontinuities caused by changes in lithology or by incised streams and lakes should be mapped. All known and suspected boundaries should be mapped such that observation wells can be placed (chosen) where they will

provide the best opportunity to measure the aquifer's response to the pumping and the boundary effects during the pumping test.

Hydraulic Properties

Estimates of all pertinent hydraulic properties of the aquifers and pertinent geologic units must be made by any means feasible. Estimates of transmissivity and the storage coefficient should be made, and if leaky confining beds are detected, leakage coefficients should be estimated. The estimation of transmissivity and the storage coefficient should be carried out by making a close examination of existing well logs and core data in the area or by gathering information from nearby aquifer tests, slug tests, or drill stem tests conducted on the aquifer(s) in question. It may also be feasible to run a slug test on the wells near the site to get preliminary values. (See ASTM Committee D-18 Standards D4044 and D4104). It should be noted that some investigators have found that slug tests often produce results which are as much as an order of magnitude low. Although some investigators have reported results which are two orders of magnitude high because the sand pack dominated the test. Such tests will, however, provide a starting point for the design. If no core analyses are available, the well log review should form a basis for utilizing an available table which correlates the type of aquifer material with the hydraulic conductivity. If detailed sample results from drill holes are available and they have grain size analyses, there are empirical formulas for estimation of transmissivity. Estimation of storage coefficient is more difficult, but can be based on the expected porosity of the material or the expected confinement of the aquifer. It is recommended that a range of values be chosen to provide a worst case and best case scenario (Freeze and Cherry, 1979). Trial calculations of well drawdown using these estimated values should be made to finalize the design, location, and operation of test and observation wells (Ferris and others, 1962; Campbell and Lehr, 1972; and Stallman, 1971).

If local perched aquifers are of a significant size and location to impact the pump test, this impact should be estimated if possible. The final test design should include adequate monitoring of any perched aquifers and leaky confining beds. This might involve the placing of piezometers into and/or above the leaky confining zone or into the perched aquifer.

Evaluation of Existing Well Information

Because the drilling of new production wells and observation wells expressly for an aquifer test can be expensive, it is advisable to use existing wells for conducting an aquifer test when possible. However, many existing wells are not suitable for aquifer testing. They may be unsuitably constructed (such as a well which is not completed in the same aquifer zone as the pumping well) or may be inappropriately located. It is also important to note that well logs and well completion data for existing facilities are not always reliable. Existing data should be verified whenever possible. The design of each well, whether existing or to be drilled, must be carefully considered to determine if it will meet the needs of the proposed test plan and analytical methods. Special attention must be paid to well location, the depth and interval of the well screen or perforation, and the present condition of existing perforations.

After the process of developing the site model and determining which analytical methods should be used, it is possible to move to the final design stage. The final stage of the design involves development of the key elements of the aquifer test: 1) number and location of observation wells; 2) design of observation wells; 3) approximate duration of the test; and 4) discharge rate.

Design of Pumping Facility

There are seven principal elements to be considered during the pumping facility design phase: 1) well construction; 2) the well development procedure; 3) well access for water level measurements; 4) a reliable power source; 5) the type of pump; 6) the discharge-control and measurement equipment; and 7) the method of water disposal. These elements are discussed in the following sections.

Well Construction

The diameter, depth and position of all intervals open to the aquifer in the pumping well should be known, as should total depth. The diameter must be large enough to accommodate a test pump and allow for water level measurements. All openings to the aquifer(s) must be known and only those openings located in the aquifer to be tested should be open to the well during the testing. If the pumping well has to be drilled, the type, size, and number of perforations should be established using data from existing well logs and from the information obtained during the drilling of the new well itself. The screen or perforated interval should be designed to have sufficient open area to minimize well losses caused by fluid entry into the well (Campbell and Lehr, 1972; and Driscoll, 1986).

A well into an unconsolidated aquifer should be completed with a filter pack in the annular space between the well screen and the aquifer material. To design an adequate filter pack, it is essential that the grain size makeup of the aquifer be defined. This is generally done by running a sieve analysis of the major lithologic units making up the aquifer. The sizing of the filter pack will depend on the grain size distribution of the aquifer material. The well screen size would be established by the sizing of the chosen filter pack (Driscoll,1986). The filter pack should extend at least one (1) foot above the top of the well screen. A seal of bentonite pellets should be placed on top of the filter pack. A minimum of three (3) feet of pellets should be used. An annulus seal of cement and/or bentonite grout should be placed on top of the bentonite pellets. The well casing should be protected at the surface with a concrete pad around the well to isolate the wellbore from surface runoff (ASTM Committee D-18, D5092; and Barcelona, Gibb, and Miller, 1983).

Well Development

Information on how the pumping well was constructed and developed should be collected during the review of existing site information. It may be necessary to interview the driller. If the well has not been adequately developed, the data collected from the well may not be representative of the aquifer. For instance, the efficiency of the well may be reduced, thereby causing increased drawdown in the pumping well. When a well is pumped, there are two components of drawdown: 1) the head losses in the aquifer; and 2) the head

losses associated with entry into the well. A well which is poorly constructed or has a plugged well screen will have a high head loss associated with entry into the well. These losses will affect the accuracy of the estimates of aquifer hydraulic parameters made using data from that well. If the well is suspected to have been poorly developed, or nothing is known, it is advisable to run a step drawdown test on the well to determine the extent of the problem. The step drawdown test entails conducting three or more steps of increasing discharge, producing drawdown curves such as shown in Figure 1. The data provided by the step drawdown test (multiple discharge test) can be analyzed using various techniques (Rorabough, 1953; and Driscoll, 1986) to obtain an estimate of well entry losses. If a determination is made that plugging results in significant losses, the well should be redeveloped prior to the pumping test using a surge block and/ or a pump until the well discharge is clear: i. e. the development results in the well achieving acceptable turbidity unit limits (Driscoll, 1986). In many cases, running a step drawdown test to determine well efficiency after the well has been surged is needed to assess the results of the development process. The results of the post development test should be compared with the step-drawdown test run prior to development. This analysis will provide a means of verifying the success of the well development.

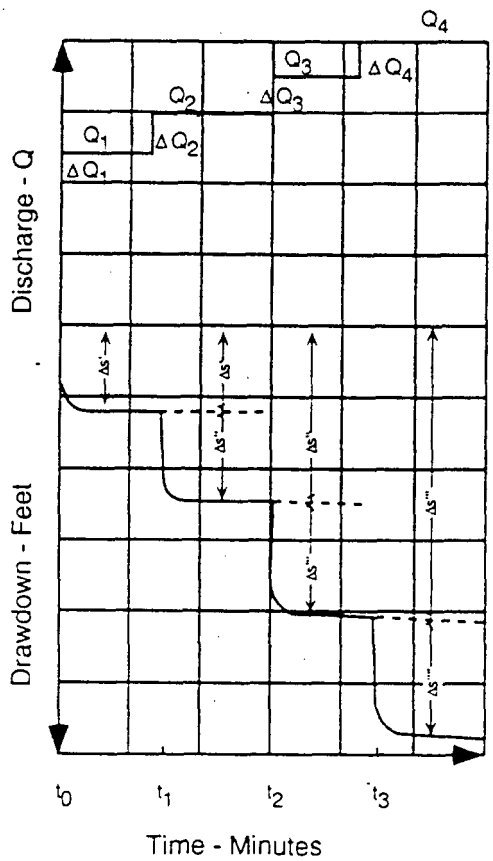

Figure 1. Variation of discharge and drawdown in multiple discharge tests (step drawdown tests).

Water Level Measurement Access

It must be possible to measure depth to the water level in the pumping well before, during, and after pumping. The quickes and generally the most accurate means of measuring the water levels in the pumped well during an aquifer test is to use an electric sounder or pressure transducer system. The transducer system may be expensive and may be difficult to install in an existing well. It may be possible to run a 1/4 inch copper line into the well as an air line. If the control well is newly constructed, the continuous copper line should be strapped to the pump column as it is being installed. If it is correctly installed, an air line can be used with somewhat less accuracy than an electric sounder or steel tape. An air line with a bubbler and either a transducer or precision pressure gage should be adequate for running an aquifer test.

With adequate temperature compensation, a surface mounted pressure transducer is as precise as one that is submerged. Steel tapes cannot always be used quickly enough in a pumping well, except in wells with a small depth to water (less than 100 feet) where the pump test crew has a fair amount of experience and the well is modified for access of the steel tape. Such modification often involves hanging a 3/4 inch pipe in the well as access for the steel tape. The pipe should be capped at the bottom with numerous 1/16 to 1/8 inch holes drilled in the pipe and cap (especially needed for wells subject to cascading water or surging). This will dampen water-level surging caused by the pump and will eliminate the problems caused by cascading water. In general, the use of a steel tape is usually confined to the later stages of the pump test where rapid changes in water levels are not occurring.

In cases where the pump is isolated by a packer to allow production from a particular zone, a transducer system should be used to monitor pumping hydraulic heads. It is important, however, to calibrate the transducers before and after the test. In addition, reference checks with an electric sounder or steel tape should be made before, during, and after the test. The ASTM Standard Test Method for determining subsurface liquid levels in a borehole or monitoring well (D4750) should be reviewed as part of the design process.

Reliable Power Source

Having power continuously available to the pump, for the duration of the test, is crucial to the success of the test. If power is interrupted during the test, it may be necessary to terminate the test and allow for sufficient recovery so that pre-pumping water-level trends can be extrapolated. At that point, a new test would be run. If, however, brief interruptions in power occur late in the test, the affect of the interruption can be eliminated by pumping at a calculated higher rate for some period so that the average rate remains unchanged. The increased rate must be calculated such that the final portion of the test compensates for the pumpage that would have occurred during the interruption of pumping.

Pump Selection

A reliable pump is a necessity during an aquifer test. The pump should be operated continuously during the test. Should a pump fail during the pumping period of the test, the time, effort, and expense of conducting the test could be wasted. Electrically powered pumps produce the most

constant discharge and are often recommended for use during an aquifer test. However, in irrigation areas, line loads can fluctuate greatly, causing variations in the pumping rate of electric motors. Furthermore, electric motors are nearly constant-load devices, so that as the lift increases (water level declines), the pumping rate decreases. This is a particular problem for inefficient wells or low transmissivity aquifers.

The discharge of engine-powered (usually gasoline or diesel) pumps may vary greatly over a 24 hour period, requiring more frequent monitoring of the discharge rate during the test. For example, under extreme conditions a diesel-powered turbine pump may have more than a 10 percent change in discharge as a result of the daily variation in temperature. The change in air temperature affects the combustion ratio of the engine resulting in a variation in engine revolutions per minute (rpm). The greater the daily temperature range,the greater the range in engine rpm. Variations in barometric pressure may also affect the engine operation and resulting rpm. Running the engine at full throttle will reduce operational flexibility for adjusting engine rpm and the resulting discharge. In areas where outside temperatures are extreme, such as the desert or a very cold region, it may be advisable to undertake measures to prevent the engine from overheating or freezing.

In order to obtain good data during the period of recovery at the end of pumping, it is necessary to have a check valve installed at the base of the pump column pipe in the discharging well. This will prevent the back flow of water from the column pipe into the well when the pumping portion of the test is terminated and the recovery begins. Any back flow into the well will interfere with or totally mask the water level recovery of the aquifer and this would make any aquifer analysis based on recovery data useless or, at best, questionable (Schafer, 1978).

Discharge-Control and Measurement Equipment

The well bore and discharge lines should be accessible for installing discharge control and monitoring equipment. When considering an existing well for the test well to be pumped (control well), the well must either already be equipped with discharge measuring and regulating equipment, or the well must have been constructed such that the necessary equipment can be added.

Control of the pumping rate during the test requires an accurate means for measuring the discharge of the pump and a convenient means of adjusting the rate to keep it as nearly constant as possible. Common methods of measuring well discharge include the use of an orifice plate and manometer, an inline flow meter, an inline calibrated pitot tube, a calibrated weir or flume, or, for low discharge rates, observing the length of time taken for the discharging water to fill a container of known volume (e.g. 5 gallon bucket; 55 gallon drum).

In addition to the potentially large variation in discharge associated with the pump motor or engine, the discharge rate is also related to the drop in water level near the pumping well during the aquifer test. As the pumping lift increases, the rate of discharge at a given level of power (such as engine rpm) will decrease. The pump should not be operated at its maximum rate. As a general rule, the pumping unit, including the engine, should be designed so that the maximum pumping rate is at least 20 percent more than the estimated long term sustainable yield of the aquifer. The long term yield of the aquifer should be determined by collecting data on pumping rates in nearby wells. If possible, a short term test of one to two hours should be run when the pump is installed. This test data should be compared to the historic data as part of the estimation process.

The pumping rate can be controlled by placing valves on the discharge line and/or by placing controls on the pump power source. A valve installed in the discharge line to create back pressure provides effective control of the discharge rate while conducting an aquifer test, especially when using an electric-powered pump. A rheostatic control on the electric pump will also allow accurate control of the discharge rate. When an engine-powered pump is being utilized, installation of a micrometer throttle adjustment device to accurately control engine rpm is recommended in addition to a valve in the line.

Water Disposal

Discharging water immediately adjacent to the pumping well can cause problems with the aquifer test, especially in tests of permeable unconfined alluvial aquifers. The water becomes a source of recharge which will affect the results of the test. It is essential that the volumes of produced water, the storage needs, the disposal alternatives, and the treatment needs be assessed early in the planning process. The produced water from the test well must be transported away from the control well and observation wells so it cannot return to the aquifer during the test. This may necessitate the laying of a temporary pipeline (sprinkler irrigation line is often used) to convey the discharge water a sufficient distance from the test site. In some cases, it may be necessary to have on-site storage, such as steel storage tanks or lined ponds. This is especially critical when testing contaminated zones where water treatment capacity is not available. The test designer should carefully review applicable requirements of the RCRA hazardous waste program, the underground injection control program, and the surface water discharge program prior to making decisions about this phase of the design. It may be necessary to obtain permits for on-site storage and final disposal of the contaminated fluids. Final disposal could involve treatment and reinjection into the source aquifer or appropriate treatment and discharge.

Design of Observation Well(s)

Verification of well response

As part of the process of selecting the location of the observation wells needed for the chosen aquifer test design, existing wells should be tested for their suitability as observation wells. The existing information regarding well construction should be reviewed as a screening mechanism for identifying suitable candidates. The wells that are identified as potential observation wells should be field tested to verify that they are suitable for monitoring aquifer response. The perforations or well screens of abandoned wells tend to become restricted by the buildup of iron compounds, carbonate compounds, sulfate compounds or bacterial growth as a result of not pumping the well. Consequently, the response test is one of the most important pre-pumping examinations to be made if such wells are to be used for observation (Stallman, 1971; and Black and Kip, 1977). The reaction of all wells to changing water levels should be tested

by injecting or removing a known volume of water into each well and measuring the subsequent change of water level. Any wells which appear to have poor response should be either redeveloped, replaced, or dropped from consideration in favor of another available well selected.

Total Depth

In general, observation wells should penetrate the tested aquifer to the same stratigraphic horizon as the well screen or perforated interval of the pumping well. This will require close evaluation of logs to adjust for dipping formations. This assumes the observation well is to be used for monitoring response in the same aquifer from which the discharging well is pumping. Actual screen design will depend on aquifer geometry and site specific lithology. If the aquifer test is designed to detect hydraulic connection between aquifers, one observation well should be screened in the strata for which hydraulic inter-connection is suspected. Depending on how much information is needed, additional wells screened in other strata may be needed (Bredehoeft and others, 1983; Walton, 1970; Dawson and Istok, 1991; and Hamlin, 1983).

Well Diameter

In general, observation well casing should have a diameter just large enough to allow for accurate, rapid water level measurements. A two-inch well casing is usually adequate for use as an observation well in shallow aquifers which are less than 100 feet in depth. They are, however, often difficult to develop. A four- to six-inch diameter well will withstand a more vigorous development process, and should have better aquifer response when properly developed. Additionally, a four or six inch diameter well may be required if a water-depth recorder is planned, depending on the type of recording equipment to be used. The difficulties in drilling a straight hole usually dictate that a well over 200 feet deep be at least four inches in diameter.

Well Construction

Ideally, the observation well(s) should have five to twenty feet of perforated casing or well screen near the bottom of the well. The final well screened interval(s) will depend on the nature of geologic conditions at the site and the types of parameters to be estimated. Any openings which allow water to enter the well from aquifers which are not to be tested should be sealed or closed off for the duration of the test. Ideally, the annular space between the casing and the hole wall should be gravel packed adjacent to the perforated interval to be tested. The use of a filter pack in wells with more than one screened interval will, however, create a problem. There is no reliable method for sealing the annular space of any unwanted filter packed interval even though the screen can be isolated. The size of the filter material should be based on the grain size distribution of the zone to be screened (preferably based on a sieve analysis of the material). The screen size should be determined based on the filter pack design (Driscoll, 1986). The space above the gravel should be sealed with a sufficient amount of bentonite or other grout to isolate the gravel pack from vertical flow from above. If the bentonite does not extend to the surface, it will be necessary to put a cement seal on top of the bentonite prior to back filling the remaining annular space. A concrete pad should be placed around the well to prevent surface fluids from entering the annular material.

After installation is finished, the observation well should be developed by surging with a block, and/or submersible pump (Campbell and Lehr, 1972; and Driscoll, 1986) for a sufficient period (usually several hours) to meet a pre-determined level of turbidity.

Radial Distance and Location Relative to the Pumped Well

If only one observation well is to be used, it is usually located 50 to 300 feet from the pumped well. However, each test situation should be evaluated individually, because certain hydraulic conditions may exist which warrant the use of a closer or more distant observation well. If the test design requires multiple observation wells, the wells are often placed in a straight line or along rays that are perpendicular from the pumping well. In the case of multiple boundaries or leaky aquifers, the observation wells need to be located in a manner which will identify the location and effect of the boundaries. If the location of the boundary is suspected before the test, it is desirable to locate most of the wells along a line parallel to the boundary and running through the pumping well, as shown in Figure 2. If aquifer anisotropy is expected, the observation wells should be located in a pattern based on the suspected or known anisotropic conditions at the site (Bentall and others, 1963; Ferris and others, 1962; Walton, 1962 and 1970; and Dawson and Istok, 1991). If the principal directions of anisotropy are known, drawdown data from two wells located on different rays from the pumping well will be sufficient. If the principal directions of anisotropy are not known, at least three wells on different rays are needed.

FIELD PROCEDURES

Well thought out field procedures and accurate monitoring equipment are the key to a successful aquifer test. The following three sections provide an overview of the methods and equipment for establishing a pre-test baseline condition and running the test itself.

Necessary Equipment for Data Collection

During an aquifer test, equipment is needed to measure/record water levels, well discharges, and the time since the beginning of the test, and to record accumulated data. Appendix One contains a detailed description of the types of equipment commonly used during an aquifer test. Appendix Two is an example form for recording test data.

Establish Baseline Trend

Collecting data on pre-test water levels is essential if the analysis of the test data is to be completely successful. The baseline data provides a basis for correcting the test data to account for on-going regional water level changes. Although the wells on-site are the main target for baseline measurements, it is important to measure key wells adjacent to the site and to account for off-site pumping which may affect the test results.

Baseline water levels

Prior to beginning the test, it will be necessary to establish a baseline trend in the water levels in the pumping and all

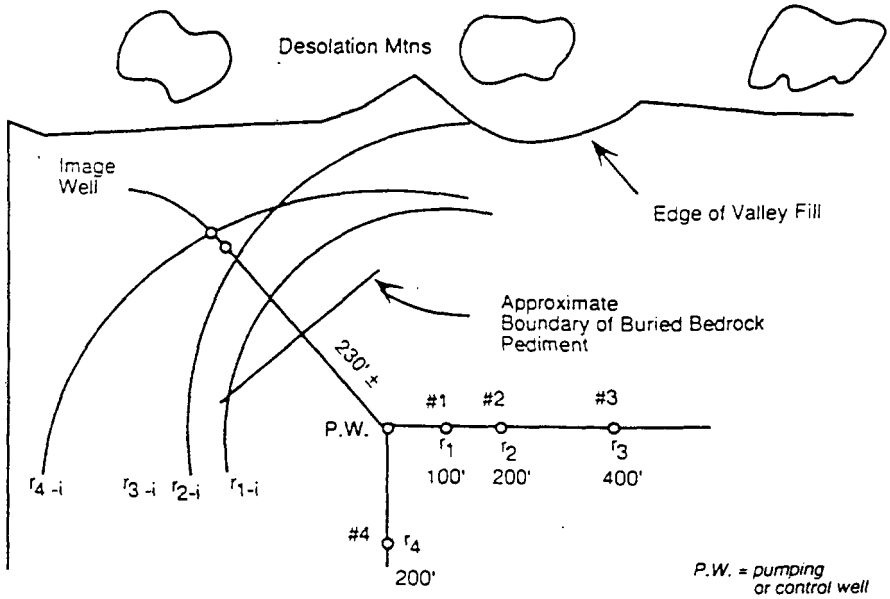

Figure 2. Observation well/pumping well location to determine buried impermeable boundary.

observation wells. As a general rule, the period of observation before the start of the test (t_0), should be at least one week. Baseline measurements must be made for a period which is sufficient to establish the pre-pumping water level trends on site (see Figure 3). The baseline data must be sufficient to explain any differences between individual observation wells. As shown in Figure 3, the water levels in on-site wells were declining prior to the test. The drawdown during the test must be corrected to account for the pre-pumping trend.

Nearby pumping activities

During the baseline measurements, the on-off times should be recorded for any nearby wells in use. The well discharge rates should be noted as should any observed changes in the proposed on-site control well and observation wells. Baseline water level measurements should be made in all off-site wells within the anticipated area of influence. As shown in Figure 3, the baseline period should be sufficient to establish the pretest pumping trends and to explain any differences in trends between individual off-site wells.

Significant effects due to nearby pumping wells can often be removed from the test data if the on-off times of the wells are monitored before and during the test. Interference effects may not, however, always be observable. In any case, changes associated with nearby pumping wells will make analysis more difficult. If possible, the cooperation of nearby well owners should be obtained to either cease pumping prior to and during the test period or to control the discharge of these wells during the baseline and test period. The underlying principle is to minimize changes in regional effects during the baseline, test and recovery periods.

Barometric pressure changes

During the baseline trend observation period, it is desirable to monitor and record the barometric pressure to a sensitivity of plus or minus 0.01 inches of mercury. The monitoring should continue throughout the test and for at least one day to a week after the completion of the recovery measurement period. This data, when combined with the water level trends measured during the baseline period, can be used to correct for the effects of barometric changes that may occur during the test (Clark, 1967).

Local activities which may affect test

Changes in depth to water level, observed during the test, may be due to several variables such as recharge, barometric response, or "noise" resulting from operation of nearby wells, or loading of the aquifer by trains or other surface disturbances (King, 1982). It is important to identify all major activities (especially cyclic activities) which may impact the test data. Enough measurements have to be made to fully characterize the pre-pumping trends of these activities. This may necessitate the installation of recording equipment. A summary of this information should be noted in the comments section of the pumping test data forms.

Test Procedures

Initial water level measurements

Immediately before pumping is to begin, static water levels in all test wells should be recorded. Measurements of drawdown in the pumping well can be simplified by taping a calibrated steel tape to the electric sounder wire. The zero point of the tape may be taped at the point representing static water level. This will enable the drawdown to be measured directly rather than by depth to water.

Measuring water levels during test

If drawdown is expected in the observation well(s) soon after testing begins and continuous water level recorders are not

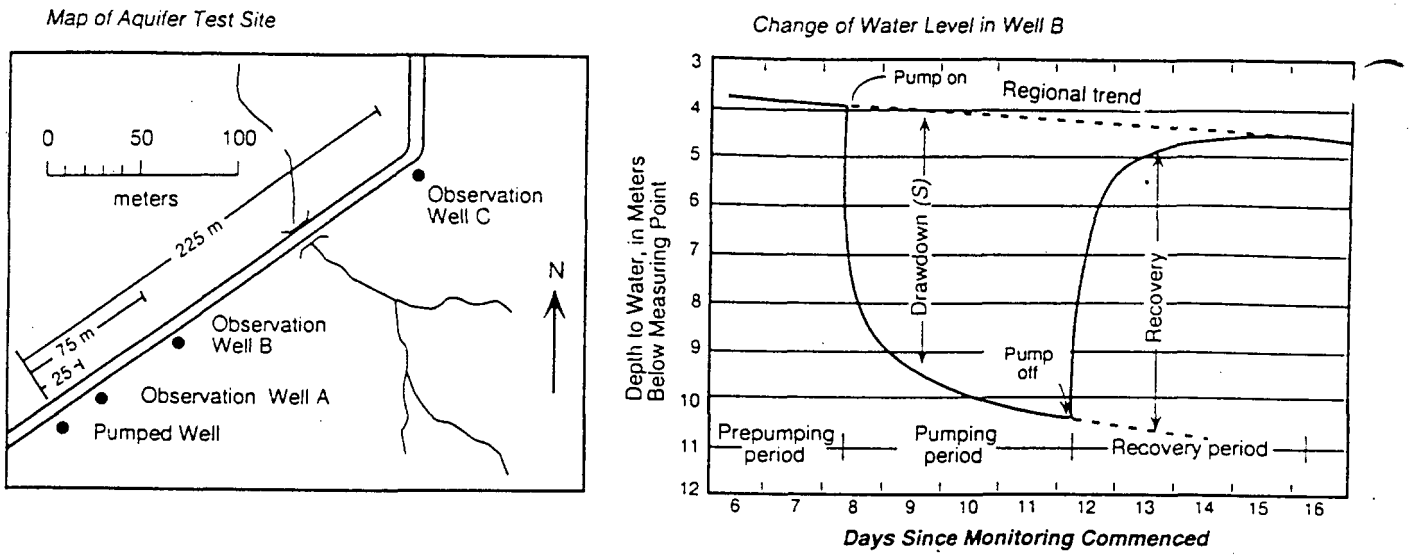

Figure 3. Example test site showing baseline, pumping test, and recovery water level measurements in one of the wells.

installed, an observer should be stationed at each observation well to record water levels during the first two to three hours of testing. Subsequently, a single observer is usually able to record water levels in all wells because simultaneous measurements are unnecessary. If there are numerous observation wells, a pressure transducer/data-logging system should be considered to reduce manpower needs.

Time frame for measuring water levels

Table 1 shows the recommended maximum time intervals for recording water levels in the pumped well. NOTE: the times provided in Table 1 are only the maximum recommended time intervals—more frequent measurements may be taken if test conditions warrant. For instance, it is recommended that water level measurements be taken at least every 30 seconds for the first several minutes of the test (see ASTM Committee D-18, D 4050). Figure 4 is a hypothetical logarithmic plot of drawdown versus time for an observation well. This plot illustrates the need for the frequency of measurements given in Table 1. As shown on the plot, frequent measurements during early times are needed to define the drawdown curve. The data used in Figure 4 was collected with a downhole pressure transducer and electronic data recording equipment. Thus, water levels could be collected about every 6 seconds initially and less frequently as the test progresses. As time since pumping started increases, the logarithmic scale dictates that less frequent measurements are needed to adequately define the curve.

Measurements in the observation well(s) should occur often enough and soon enough after testing begins to avoid missing the initial drawdown values. Actual timing will depend on the aquifer and well conditions which vary from test area to test area. Estimates for timing should be made during the planning stages of aquifer testing using estimated aquifer parameters based on the conceptual model of the site.

Table 1. Maximum Recommended Time Intervals for Aquifer Test Water Level Measurements*

0 to 3 minutes	every 30 seconds
3 to 15 minutes	every minute
15 to 60 minutes	every 5 minutes
60 to 120 minutes	every 10 minutes
120 min. to 10 hours	every 30 minutes
10 hours to 48 hours	every 4 hours
48 hours to shut down	every 24 hours

* *Dr. John Harshbarger, personal communication, 1968.*

Monitoring discharge rate

During the initial hour of the aquifer test, well discharge in the pumping well should be monitored and recorded as frequently as practical. Ideally, the pretest discharge will equal zero. If it does not, the discharge should be measured for the first time within a minute or two after the pump is started.

It is important when starting a test to bring the discharge up to the chosen rate as quickly as possible. How frequently the discharge needs to be measured and adjusted for a test depends on the pump, well, aquifer, and power characteristics. Output from electrically driven equipment requires less frequent adjustments than from all other pumping equipment. Engine-driven pumps generally require adjustments several times a day because of variation that occurs in the motor performance due to a number of factors, including air temperature effects. At a minimum, the discharge should be checked four times per day: 1) early morning (2 AM); 2) mid-morning (10 AM); 3) mid-afternoon

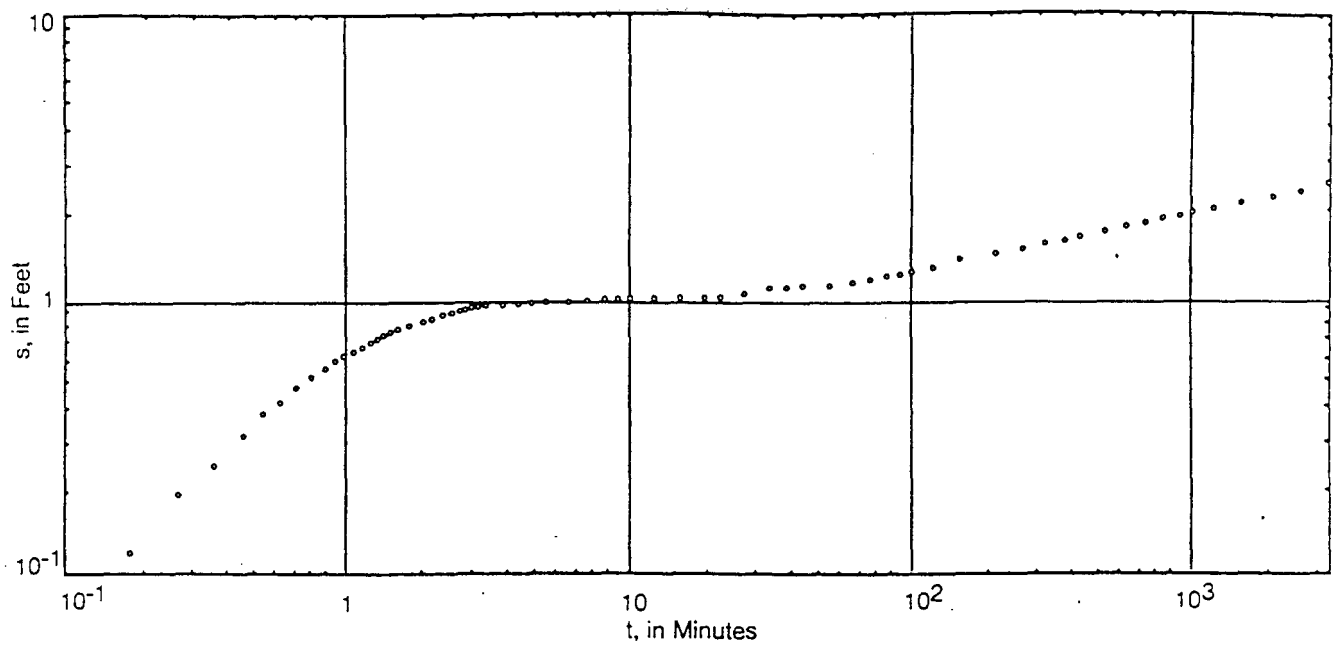

Figure 4. Logarithmic plot of s vs t for observation well.

PM); and 4) early evening (8 PM). The discharge should never be allowed to vary more than plus or minus 5 percent (Ferris, J. G., personal communication, 1/19/68). The lower the discharge rate, the more important it is to hold the variation to less than 5 percent. The variation of discharge rate has a large effect on permeability estimates calculated using data collected during a test. The importance of controlling the discharge rate can be demonstrated using a sensitivity analysis of pumping test data. An analysis of this type indicates that a 10 percent variation in discharge can result in a 100 percent variation in the estimate of aquifer transmissivity. Thus, short-term pumping tests with poor control of discharge are not suitable for estimating parameters needed for adequate site characterization. If, however, the pumping test is run in such a way that the discharge rate varies less than 5 percent and water levels are measured frequently, the short-term pumping test data can be used to obtain some reliable estimates of aquifer performance.

It should be emphasized, however, that some random, short-term variations in discharge may be acceptable, if the average discharge does not vary by more than plus or minus 5 percent. A systematic or monotonic change in discharge (usually, a decrease in discharge with increasing time) is, however, unacceptable.

Water level recovery

Recovery measurements should be made in the same manner as the drawdown measurements. After pumping is terminated, recovery measurements should be taken at the same frequency as the drawdown measurements listed above in Table 1.

Length of test

The amount of time the aquifer should be pumped depends on the objectives of the test, the type of aquifer, location of suspected boundaries, the degree of accuracy needed to establish the storage coefficient and transmissivity, and the rate of pumping. The test should continue until the data are adequate to define the shape of the type curve sufficiently so that the parameters required are defined. This may require pumping for a significant period after the rate of water level change becomes small (so called water level "stabilization"). This is especially the case when the locations of boundaries or the effects of delayed drainage are of interest. Their influence may occur a few hours after pumping starts (see Figure 3), or it may be days or weeks. Some aquifer tests may never achieve equilibrium, or exhibit boundary effects.

Although it is not necessary for the pumping to continue until equilibrium is approached, it is recommended that pumping be continued for as long as possible and at least for 24 hours. Recovery measurements should be made for a similar period or until the projected pre-pumping water level trend has been attained. The costs of running the pump a few extra hours are low compared with the total costs of the test, and the improvement in additional information gained could be the difference between a conclusive and an inconclusive aquifer test.

Water disposal

As discussed previously, the water being pumped must be disposed of legally within applicable local, State, and Federal rules and regulations. This is especially true if the ground

water is contaminated or is of poor quality compared to that at the point of disposal. During the pumping test, the individuals carrying out the test should carry out water quality monitoring as required by the test plan and any necessary disposal permits. This monitoring should include periodic checks to assure that the water disposal procedures are following the test design and are not recharging the aquifer in a manner that would adversely affect the test results. The field notes for the test should document when and how monitoring was performed.

Recordkeeping

All data should be recorded on the forms prepared prior to testing (See Appendix 2). An accurate recording of the time, water level, and discharge measurements and comments during the test will prove valuable and necessary during the data analyses stage following the test.

Plotting data

During the test, a plot of drawdown versus time on semi-log paper should always be prepared and updated as new data is collected for each observation well. A plot of the data prepared during the actual test is essential for monitoring the status and effectiveness of the test. The plot of drawdown versus time will reveal the effects of boundaries or other hydraulic features if they are encountered during the test, and will indicate when enough data for a solution have been recorded. A semi-log or log-log mass plot of water level data from all observation wells should be prepared as time allows. Such a plot can be used to show when aquifer conditions are beginning to affect individual wells. More importantly, it enables the observer to identify erroneous data. This is especially important if transducers are being used for data collection. The utilization of a portable PC with a graphics package is an option for use in carrying out additional field manipulation of the data. It should not, however, be a substitute for a manual plot of the data.

Precautions

(a) Care should be taken for all observers to use the same measuring point on the top of the well casing for each well. If it is necessary to change the measuring point during the test, the time at which the point was changed should be noted and the new measuring point described in detail including the elevation of the new point.

(b) Regardless of the prescribed time interval, the actual time of measurement should be recorded for all measurements. It is recognized that the measurements will not be taken at the exact time intervals suggested.

(c) If measurements in observation well(s) are taken by several individuals during the early stages of testing, care should be taken to synchronize stop watches to assure that the time since pumping started is standardized.

(d) It is important to remember to start all stop watches at the time pumping is started (or stopped if performing a recovery test).

(e) Comments can be valuable in analyzing the data. It is important to note any problems, or situations which may alter the test data or the accuracy with which the observer is working.

(f) If several sounders are to be used, they should be compared before the start of the test to assure that constant readings can be made. If the sounder in use is changed, the change should be noted and the new sounder identified in the notes.

PUMPING TEST DATA REDUCTION AND PRESENTATION

All forms required for recording the test data should be prepared prior to the start of the test and should be attached to a clip board for ease of use in the field. It is an option to have a portable PC located on-site with appropriate spreadsheets and graphics package to allow for easier manipulation of the data during the test. The hard copy of the forms should be maintained for the files.

Tabular Data

All raw data in tabular form should be submitted along with the analysis and computations. The data should clearly indicate the well location(s), and date of test and type of test. All data corrections, for pre-pumping trends, barometric pressure fluctuations and other corrections should be given individually and clearly labeled. All graphs used for corrections should be referenced on the specific table. These graphs should be attached to the data package.

Graphs

All graphs or plots should be drafted carefully so that the individual points which reflect the measured data can be retrieved. Semi-logarithmic and logarithmic data plots (see Figures 5 and 6) should be on paper scaled appropriately for the anticipated length of the test and the anticipated drawdown. All X-Y coordinates shall be carefully labeled on each plot. All plots must include the well location, date of test, and an explanation of any points plotted or symbols used.

ANALYSIS OF TEST RESULTS

Data analysis involves using the raw field data to calculate estimated values of hydraulic properties. If the design and field-observation phases of the aquifer test are conducted successfully, data analyses should be routine and successful. The method(s) of analysis utilized will depend, of course, on particular aquifer conditions in the area (known or assumed) and the parameters to be estimated.

Calculations

All calculations and data analyses must accompany the final report. All calculations should clearly show the data used for input, the equations used and the results achieved. Any assumptions made as part of the analysis should be noted in the calculation section. This is especially important if the data were corrected to account for barometric pressure changes, off-site pumping changes, or other activities which have affected the test. The calculations should reference the appropriate tables and graphs used for a particular calculation.

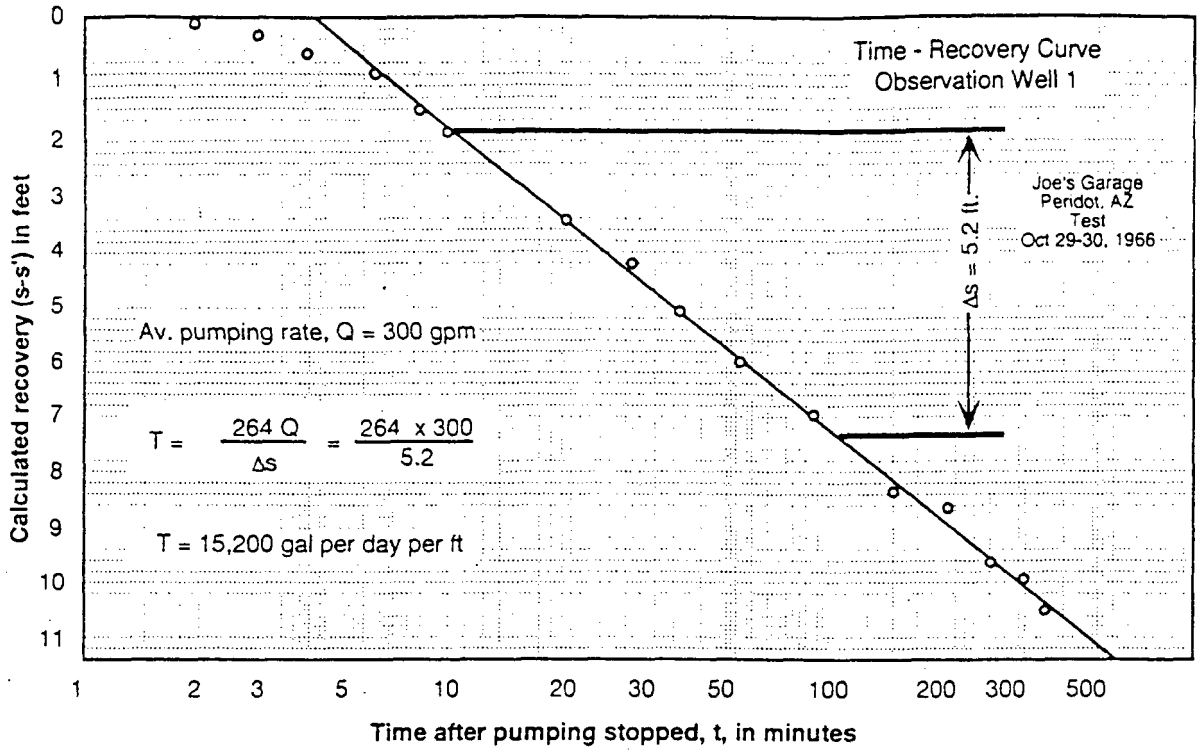

Figure 5. Time recovery curve for observation well - October 30, 1966.

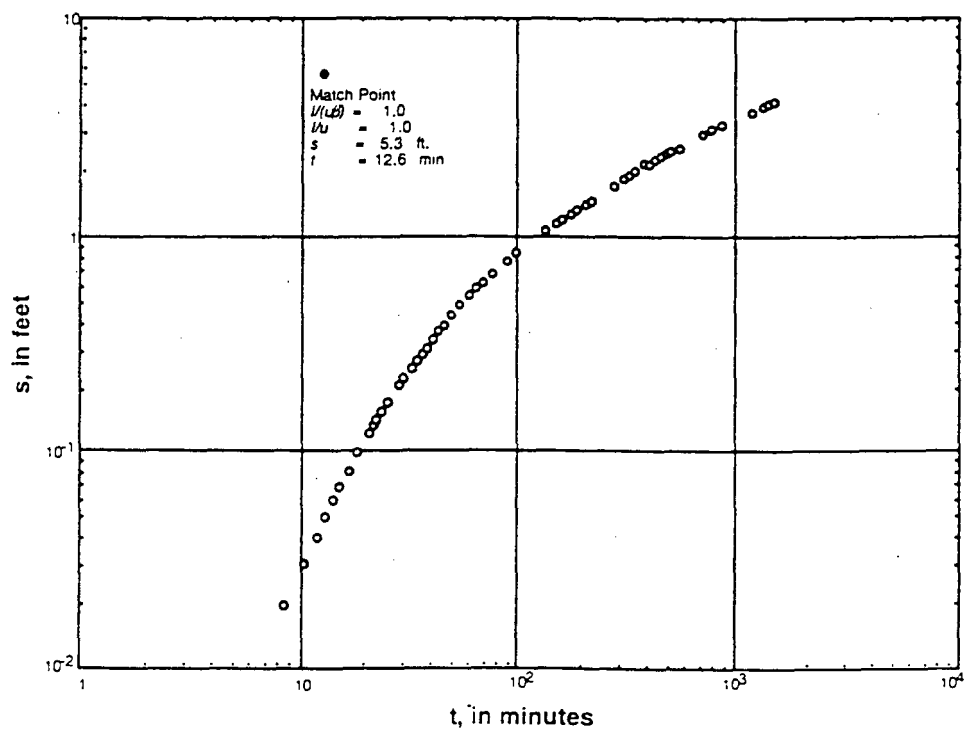

Figure 6. Logarithmic plot of s vs t for Observation Well 23S/25E-17Q_2 at Pixley, CA.

Aquifer Test Results

The results of an aquifer pumping and recovery test should be submitted in narrative format. The narrative report should include the raw data in tabular form, the plots of the data, the complete calculations and a summary of the results of the test. The assumptions made in utilizing a particular method of analysis should also be included.

SUMMARY-EXAMPLE FACILITY DESIGN

As a means of focusing the discussions presented in the preceding sections, the following example of an aquifer pumping test is described. The facility layout is shown in Figure 7. The site is located near a normally dry river channel which is subject to flood flows. The site was constructed for the purpose of carrying out experiments relating to artificial recharge of a shallow alluvial aquifer. The proposed methods of recharge involved use of a pit and a well.

The aquifer at the site is comprised of unconsolidated basin fill material, mainly silty sand and gravel with some clay lenses. The depth to water is generally greater than 50 feet and the river is a source of recharge when it flows. There are extensive gravel lenses above the water table which outcrop at the base of the river channel. These lenses occur beneath the site.

Figure 7 shows the locations of the various monitoring wells relative to the recharge facilities and the river. The well locations were selected to facilitate both characterization of the site and subsequent evaluation of the various recharge tests. The recharge well (used as the pumping well during the site aquifer tests) and the eight inch observation wells were completed to a depth of 150 feet in the upper water bearing unit of a basin fill aquifer. The depth to water in the area was about 75 feet. The recharge and observation wells were screened from about 80 feet to 140 feet. The 1-3/4 inch access tubes were 80-100 feet deep with a five-foot well screen on the bottom of each tube.

The eight-inch observation wells were placed in a line parallel to the river to assess both the effect of flood flows on the aquifer and the hydraulic characteristics of the recharge site itself. The 1-3/4 inch access tubes were positioned for monitoring ground-water movement near the top of the water table in response to aquifer recharge and discharge (pumping) tests. The two inch piezometers at varying depths were constructed to evaluate shallow ground-water movement in response to recharge.

Figure 8 is a plan view of the recharge facility showing the pumping/recharge well and the water distribution system. The pumping well was equipped with a downhole turbine pump powered by a methane driven, 6-cylinder engine. As indicated on Figure 8, the pump discharge was measured using a

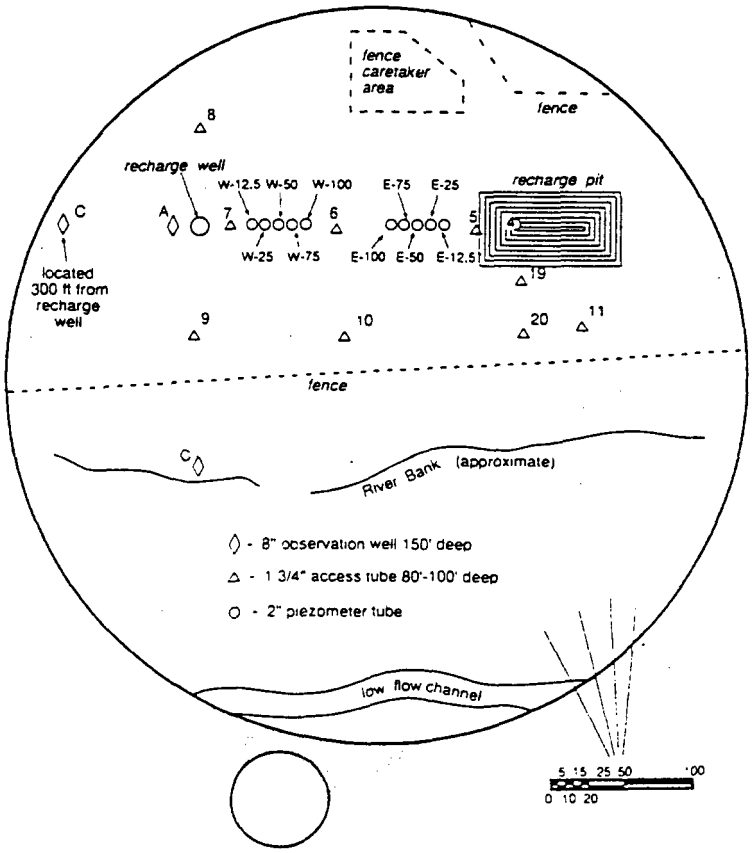

Figure 7. Recharge facility well layout.

Parshall flume (see Figure 9). The water from pumping tests was discharged off-site via the concrete box and distribution line. To prevent interference with test results from nearby recharge of the pumping test water, a temporary pipeline was constructed from irrigation pipe. This temporary line ran from the end of the river drain line to a point 1200 feet down stream out of the estimated area of influence. The ground water was not contaminated. Thus, special water quality monitoring was not required.

The pumping tests for site characterization involved the following monitoring procedure:

1. The eight-inch observation well closest to the recharge well (Well A) was equipped with a Stevens water stage recorder with an electric clock geared for a 4-hour chart cycle;

2. The other two eight-inch observation wells (Wells B and C) were equipped with Stevens water stage recorders with an electric clock geared for a 12-hour chart cycle;

3. The pumping well was equipped with a stilling well composed of a 3/4-inch pipe strapped to the pump column. The stilling well was drilled with 1/4-inch holes through the length. The stilling well was used for assessing the well for water level measurements with a 150-foot steel tape. The steel tape was marked in 0.01 ft. increments for the first 100 feet and in 0.1 ft. increments for the remaining 50 feet;

4. The 1-3/4 inch access wells were monitored at least once a day with a neutron moisture logger to assess changes in saturation as the water level declined in response to the test. This information was used to verify the water level declines in the regular monitoring wells and to aid in assessing the delayed drainage effects which were to be estimated using the water level response data from the eight-inch observation wells;

5. A continuous recording barograph was located in a standard construction, USDA weather station shed located between access Wells 9 and 10; and

6. The pump engine was equipped with an rpm gage to monitor pump performance and a micrometer adjustment on the throttle.

A step drawdown test and several short-term pumping tests were run at the site prior to running the principal aquifer characterization test. The step drawdown test was used as a means of selecting the final pumping test design. The short term tests were used to obtain an initial picture of aquifer response.

The results of the step drawdown test run on the recharge well after development indicated that the well was suitable for use as a test well. The results of the step test were also used to estimate well efficiency at different rates. Table 2 gives the efficiencies for three (3) discharge rates. As indicated, the well efficiency was greater than 90% for a rate of about 200

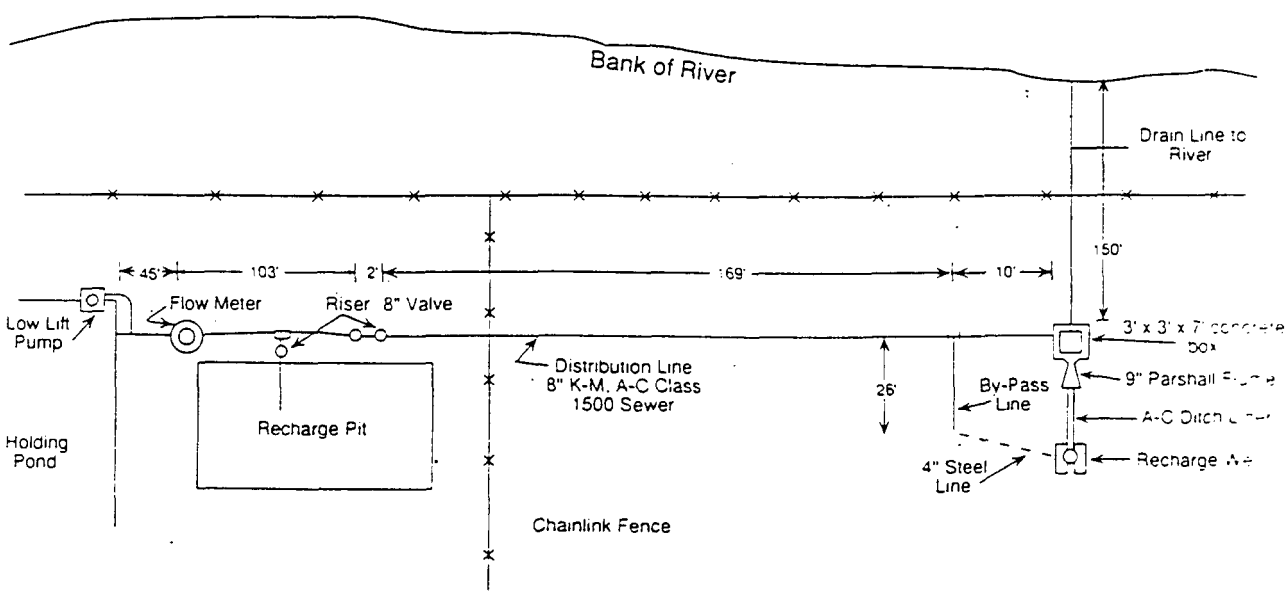

Figure 8. Water distribution and drainage facilities at the artificial recharge site.

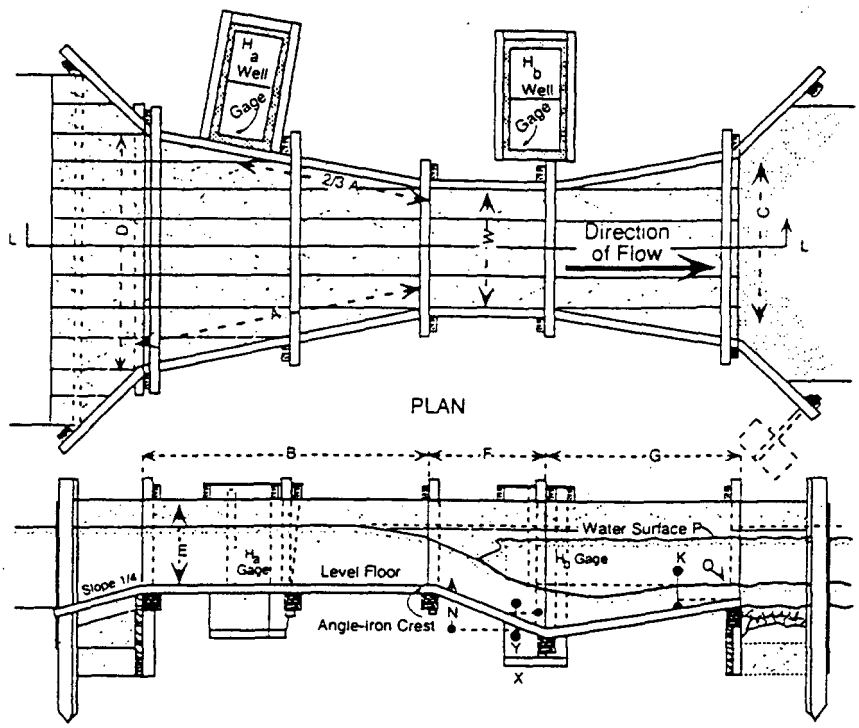

Figure 9. Parshall flume dimensions.

gpm. Based on this data, the design rate for the long-term test was set at about 200 gpm (actual average was 204 gpm).

Table 2. Well Efficiency of R#1 after 200 Minutes of Pumping

Discharge	Theoretical Drawdown	Actual Drawdown	Well Efficiency
gpm	*ft*	*ft*	*percent*
189	7.00	7.51	92
326	11.88	14.71	81
474	17.27	25.41	68

Because the initial short-term tests indicated that delayed drainage was an issue at the site, the main test was designed to run for a continuous period of at least 20 days. The actual scheduling of the test was established to try to avoid flow in the river as a result of a major precipitation event during the background, pumping, and recovery periods. The chosen test period was in the fall after the end of the irrigation season, which also minimized off-site pumping that might affect the results. It should be noted that two short-term tests were planned to follow the main pumping test during the winter rainy season when flow in the river was possible. This was done to allow the impacts of an uncontrolled recharge event on the system to be assessed. The main pumping test would provide a basis for comparison.

The discharging well was measured on a time schedule per the criteria in Table 1, except that measurements for the initial 10 minute period were taken every 30 seconds. The observation wells were observed manually on the same schedule for the initial 30 minute period and then the recorders were utilized. Discharge measurements were monitored at least every 5 minutes for the first 30 minutes and then were monitored with water levels for the first 12 hours. Discharge measurements were monitored at least four times daily until the end of the test. The access tubes were monitored twice daily to assess changes in saturation near the water table.

The results from the long term pumping test are shown on Figure 10 as a semi-log data mass plot (drawdown versus log time) of the data for the three (3) observation wells. The large initial water level decline for Observation Well A is due to its close proximity to the pumping well (15 feet). The rise in water level at the end of the test was caused by a slight decrease in discharge rate.

Values of T and S were obtained by the non-equilibrium method. The plots of drawdown as a function of log time did not give a good overlay on the non-equilibrium type curve for early times. For later times, it was possible to obtain a good match. The match points obtained for the three observation wells are listed in Table 3. The values of T and S are also shown in Table 3. As indicated, the estimates of T and S were in close agreement.

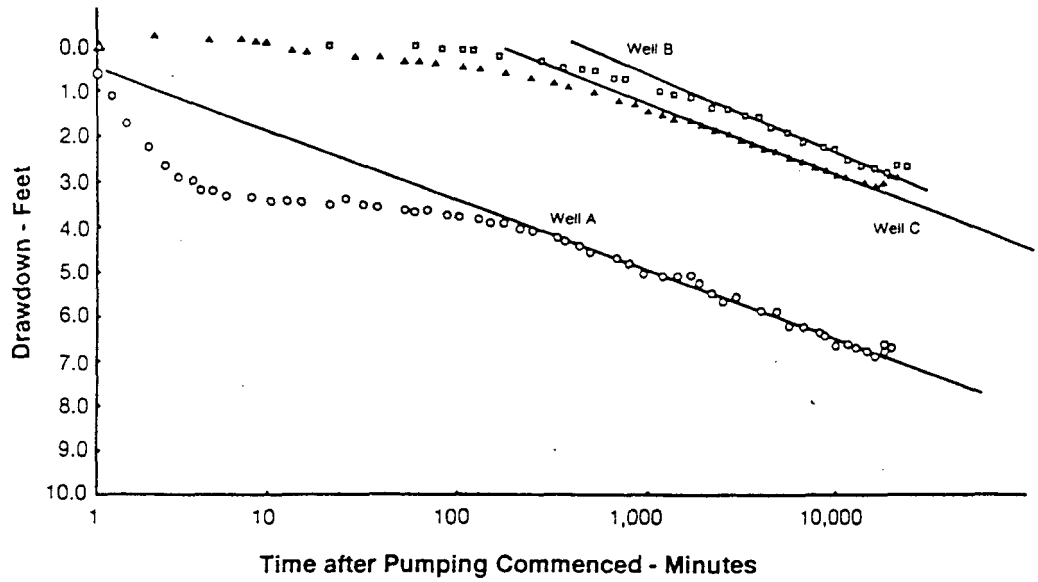

Figure 10. Drawdown versus log of time in observation wells A, B, and C during pumping of R#1.

Table 3. Values of T and S Obtained by Non-Equilibrium Equation for Discharge Conditions.

Location	w(u)	l/u	s	t	r	T	S
			ft	*min*	*ft*	*gpd/ft*	
Well A	110	10^5	0.62	14900	14.7	37,600	0.01
Well B	1	10	0.62	1780	280.0	37,600	0.03
Well C	1	10	0.58	530	175.4	40,200	0.03

The estimates for storativity were also in reasonable agreement. It is important to note that the test results showed delayed drainage to be a significant factor at this site. The initial estimates of storativity using data from the early part of the test were about 1×10^{-5} rather than 3×10^{-2} estimated after 20 days of pumping. This effect was expected because of the heterogeneous nature of the basin fill. As a means of comparison, water balance studies on a large well field located 15 miles away (completed in the same material) were reviewed. These studies provided an estimate of storage coefficient (based on 10 years of pumpage) of about 0.15. Thus, it was concluded that the aquifer at the site was under water table conditions, but significant delayed drainage effects were present.

The results of the pumping tests at the site were used to characterize the site and design several long-term recharge experiments. This included monitoring design for evaluation of the effect of river flows on the regional aquifer.

Appendix One

Equipment for Data Collection

a. Water Levels

Water level measurements can be made with electric sounders, air line and pressure gages, calibrated steel tapes, or pressure transducers (Garber and Koopman, 1968; and Bentall and others, 1963).

(1) Electric Sounders

(a) An electric sounder is recommended for measuring water levels in the pumping well because it will allow for rapid, multiple water level readings, especially important during the early stages of aquifer pumping and recovery tests.

(b) A dedicated sounder should be assigned to each observation well throughout the duration of the test. This is particularly important in ground-water quality studies to prevent cross contamination.

(c) Each sounder should be calibrated prior to the commencement of testing to assure accurate readings during the test.

(2) Air Lines and Pressure Gages

(a) Air lines are only recommended when electric sounders or steel tapes cannot be used to obtain water level measurements. Their usefulness is limited by the accuracy of the gage used and by difficulties in eliminating leakage from the air line. A gage capable of being read to 0.01 psi will be needed to obtain the necessary level of accuracy for determining water level change. A continuous copper or plastic line of known length should be strapped to the column pipe when the pump is installed. This will minimize the potential for leaks.

(b) When air lines are used, the same precision pressure gage should be used on all wells.

(c) Each pressure gage should be calibrated immediately prior to and after the test to assure accurate readings.

(d) The air line and pressure gage assembly should also be calibrated prior to the test by obtaining static water level by another method, if possible.

(3) Calibrated Steel Tapes

(a) Steel tapes marked to .01 ft. are preferred unless rapid water level drawdown or buildup is anticipated. If rapid drawdown, cascading water, or high frequency oscillation are anticipated, electric sounders, float actuated recorders or pressure transducers are preferred.

(b) Steel tapes are not recommended for use in the pumping well because of fluctuating water levels caused by the pump action, possible cascading water and the necessity for obtaining rapid water level measurements during the early portions of the aquifer pumping and recovery tests. If tapes are used, and the water level fluctuates, the well must be equipped with a means of dampening fluctuating water levels. Additional manpower will be needed during the initial stages of the test.

(4) Pressure Transducers

Pressure transducers are often used in situations where access to the well is restricted, such as a well where packers are being used to isolate a certain zone. They may also be applicable in large-scale tests using a computerized data collection system. Such a system will significantly reduce the manpower needed during the initial stages of a multiple well test. The most common installation uses down hole transducers with recording of the results taking place on the surface.

(a) Transducers should be calibrated prior to installation, and should be capable of accurately detecting changes of less than .005 psi. Transducer systems which will accurately record water level changes of .001 feet are available. The resolution of transducers, however, depends on the full scale range. Where large drawdowns are expected, such resolution is not possible.

(b) After installation, the transducers and recording equipment should be calibrated by comparing pressure readings to actual water level measurements taken with a steel tape. Periodic measurements of the water level should be made during the test to verify that the transducers are functioning properly.

(c) The effect of barometric changes on the transducers should be determined prior to and during the test. This will require continuous monitoring of the barometric pressure at the site as well as periodic comparisons of water level and transducer readings (Clark, 1967).

b. Discharge Measurement

The equipment commonly used for measuring discharge in the pumping well includes orifice plates, in-line water meters, Parshall flumes and recorders, V-notch weirs, or, for low discharge rates, a container of known volume, and a stop watch (Driscoll, 1986). The choice of method will depend upon a combination of factors, including i) accuracy needed, ii) planned discharge rate, iii) facility layout, and iv) point of discharge. If, for instance, it is necessary to discharge the water a half mile from the

pump, a flume or weir will probably not be used, because the distance between the point of discharge control and the point of discharge would make logistics too difficult. An in-line flow meter or a pitot tube would be the most likely calibrated devices (U.S. Bureau of Reclamation, 1981; King, 1982; U.S. EPA, 1982; and Leopold and Stevens, 1987).

(1) Orifice Plate

(a) Orifice plates with manometers (see Figure 11) are an inexpensive and accurate means of obtaining discharge measurements during testing. The thin plate orifice is the best choice for the typical pump test. An orifice plate has an opening smaller than that of the discharge pipe. A manometer is installed into and onto the end of the discharge pipe. The diameter of the plate opening must be small enough to ensure that the discharge pipe behind the plate is full at the chosen rate of discharge. The reading shown on the manometer represents the difference between the upstream and downstream heads.

(b) Assuming the devices are manufactured accurately and are installed correctly, an orifice plate will provide an accuracy of between two and five percent. The orifice tube must be horizontal and full at all times to achieve the design accuracy.

(c) The accuracy should be established prior to testing by pumping into a container of known volume over a given time. This should be repeated for several rates.

(2) In-line Flow Meter

(a) In-line flow meters can give accurate readings of the flow if they are installed and calibrated properly. The meter must be located sufficiently far from valves, bends in the pipe, couplings, etc., to minimize turbulence which will affect the accuracy of the meter. **The meter must be installed so that it is completely submerged during operation.**

(b) Use of a meter is an easy way to monitor the discharge rate by recording the volume of flow through the meter using a totalizer or other means at one minute intervals and subtracting the two readings. Some meters register instantaneous rate of flow and total flow volume.

(c) The meter should be calibrated after installation (prior to the test) to insure its accuracy.

(3) Flumes and Weirs

(a) There are numerous accurate flumes and weirs on the market. The choice depends mainly on the approximate discharge anticipated, the location of the discharge point and the nature of the facility. The cost of installation will preclude use at many non-permanent facilities.

(b) The weir (see Figure 12) or flume should be located close to the pump. There should be a permanent recorder on the device as well as means of making manual measurements (e.g., staff gage).

(c) The discharge canal should have a sufficient length of unobstructed upstream channel so as not to affect the accuracy of the chosen weir or flume.

(4) Pitot Tube

(a) The pitot tube is a velocity meter which is installed in the discharge pipe to establish the velocity profile in the pipe. Commercially available devices consist of a combined piezometer and a total head meter.

(b) The tube must be installed at a point such that the upstream section is free of valves, tees, elbows, etc., for a minimum distance equal to 15

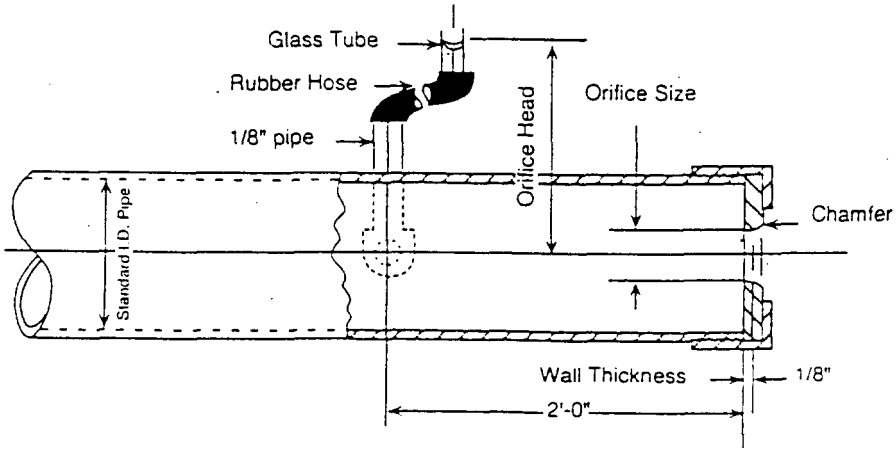

Figure 11. Diagram of orifice meter.

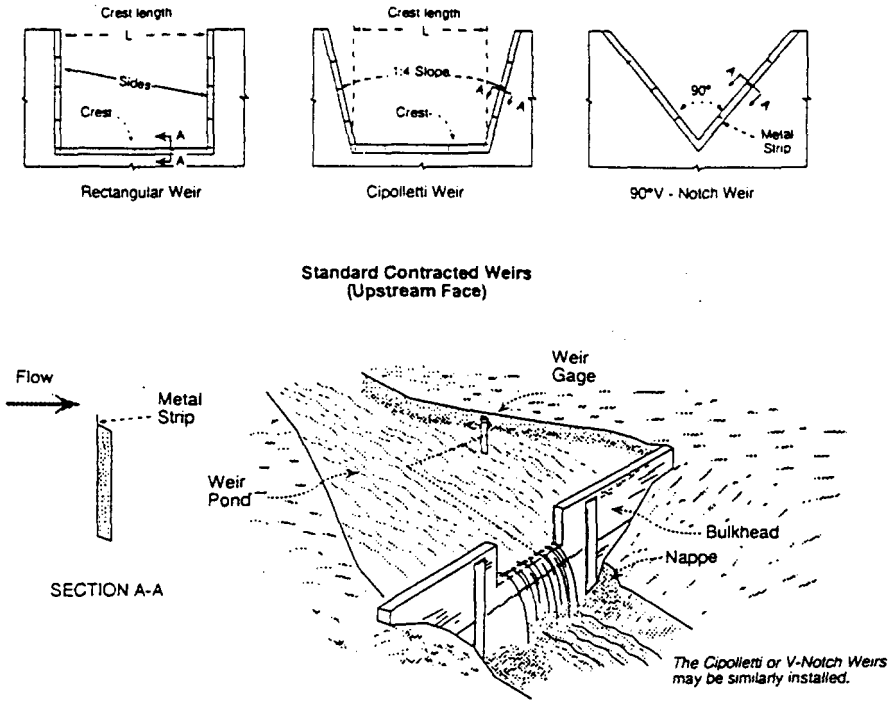

Figure 12. Standard contracted weirs, and temporary discharging at free flow.

to 20 times the pipe diameter to minimize turbulence at the location of the tube.

(c) Since the pitot tube becomes inaccurate at low velocities, the diameter of the pipe should be small enough to maintain reasonably high velocities.

(5) Container of Known Volume and Stop Watch

(a) The use of a container of known volume and a stop watch is a simple way to measure the discharge rate of a low volume discharging well.

(b) By recording the length of time taken for the discharging water to fill a container of known volume, the discharge rate can be calculated.

(c) This method can be used only where it is possible to precisely measure the time interval required for a known volume to be collected. If rates are sufficiently high so that water "sloshes" in the container, or they prohibit development of a relatively smooth surface on the water in the container, this method is likely to be inaccurate. Restricting use of this method to flows of less than 10 gpm is probably a conservative rule of thumb.

c. Discharge Regulation

(1) The size of the discharge line and the gate valve should be such that the valve will be from one-half to three-fourths open when pumping at the desired rate (during the initial phase of the test) with a full pipe.

(2) The valve should be placed a minimum of five (5) pipe diameters down-stream from an in-line flow meter, to ensure that the pipe is full and flow is not disturbed by excessive turbulence. In the case of some meters, such as a pitot tube, an in-line manometer, or an orifice plate, the valve would need to be upstream. (In this case the pipe downstream of the valve must be sized to be full at all times.)

d. Time

(1) A stop watch is recommended for use during an aquifer pumping and recovery test. Time should be recorded to the nearest second while drawdown is rapid, and to the nearest minute as the time period between measurements is increased beyond 15 minutes.

(2) If more than one stop watch is to be used during the testing, then all watches should be synchronized to assure that there is no error caused by the imprecise measurements of elapsed time.

(3) Accuracy of time is critical during the early stage of a pump or aquifer test and it is crucial to have all stop watches reflect the exact time. Later in the test the time recorded to the nearest minute becomes less critical.

(4) A master clock should be kept on site for tests longer than one day. This will provide a backup in case of stop watch problems.

Appendix Two

Recording Forms

It is very important that each well data form stand alone. The data forms must contain all information which may have a bearing on the analysis of the data. See the suggested format for pumping test data recording sheets located at the end of this appendix. The form should allow for the following data to be recorded on the data sheet for each well:

(a) date
(b) temperature
(c) discharge rate
(d) weather
(e) well location
(f) well number
(g) owner of the well
(h) type of test (drawdown or recovery)
(i) description of measuring point
(j) elevation of measuring point
(k) type of measuring equipment
(l) radial distance from center of pumped well to the center of the observation well
(m) static depth to water
(n) person recording the data
(o) page number of total pages

In addition to the above information to be recorded on each page, the forms should have columns for recording of the following data:

(a) the elapsed time since pumping started, shown as the value (t)
(b) the elapsed time since pumping stopped, shown as (t')
(c) the depth in feet to the water level
(d) drawdown or recovery of the water level in feet
(e) the time since pumping started divided by the time since pumping stopped, shown as (t/t')
(f) the discharge rate in gallons per minute
(g) a column for comments to note any problems encountered, weather changes (i.e. barometric changes, precipitation), natural disasters, or other pertinent data.

AQUIFER TEST FIELD DATA SHEET

Page___ of____

_____Pumped Well No._____ Date _____

_____Observation Well No._____ Weather _____

Owner _____ Location _____

Observers: _____

Measuring Point is _____which is _____ feet above/below surface.

Static Water Level _____feet below land surface.

Distance to pumped well _____feet. Type of Test _____

Discharge rate of pumped well _____ gpm (gallons per minute).

Total number of observation wells _____.

Water Measurement Technique_____.

Recorded by _____. Temperature during test_____.

Clock Time	Elapsed Time Since Pump Started or Stopped (min)	Depth to Water Below Land (feet)	Drawdown or Recovery (feet)	Discharge or Recharge (GPM)	t/t'	Comments

AQUIFER TEST FIELD DATA SHEET

Continuation Sheet

Distance to pumped well _____ Bearing _____ Page _____ of _____

_____ Pumped Well No. _____ Date _____

_____ Observation Well No. _____ Recorded by _____

Clock Time	Elapsed Time Since Pump Started or Stopped (min)	Depth to Water Below Land (feet)	Drawdown or Recovery (feet)	Discharge or Recharge (GPM)	t/t'	Comments

Acknowledgements

This paper would not have been possible without the critical assistance of a number of persons, especially Helen Simonson who had to read my often cryptic handwriting.

The following individuals reviewed the document and provided numerous technical and editorial comments:

Dr. L. G. Wilson, Department of Hydrology and Water Resources, University of Arizona, Tucson, Arizona;
John McLean, US Geological Survey, Regional Hydrologist's Office, Denver, Colorado;
Dr. Fred G. Baker, Baker Consultants, Inc., Golden, Colorado;
Jerry Thornhill, US EPA, Robert S. Kerr Environmental Research Laboratory, Ada, Oklahoma;
Marc Herman, US EPA Region VIII, Denver, Colorado;
Alan Peckham, US EPA, NEIC, Denver, Colorado;
Darcy Campbell, US EPA Region VIII, Denver, Colorado;
Mike Wireman, US EPA Region VIII, Denver, Colorado;
Steve Acree, US EPA, Robert S. Kerr Environmental Research Laboratory, Ada, Oklahoma; and
Dean McKinnis, US EPA Region VIII, Denver, Colorado.

Glossary

Aquifer: A unit of geologic material that contains sufficient saturated permeable material to conduct ground water and to yield economically significant quantities of ground water to wells and springs. The term was originally defined by Meinzer (1923, p. 30) as any water-bearing formation. Syn: water horizon; ground-water reservoir; nappe; aquafer.

Aquifer Test: A test involving the withdrawal of measured quantities of water from, or addition of water to, a well and the measurement of resulting changes in head in the aquifer both during and after the period of discharge or addition.

Aquitard: A confining bed that retards but does not prevent the flow of water to or from an adjacent aquifer; a leaky confining bed. It does not readily yield water to wells or springs, but may serve as a confining bed storage unit for ground water. Cf: aquifuge; aquiclude.

Capillary Fringe: The lower subdivision of the zone of aeration, immediately above the water table in which the interstices contain water under pressure less than that of the atmosphere, being continuous with the water below the water table but held above it by surface tension. Its upper boundary with the intermediate belt is indistinct, but is sometimes defined arbitrarily as the level at which 50 percent of the interstices are filled with water. Syn: zone of capillarity; capillary-moisture zone.

Confined Aquifer: An aquifer bounded above and below by impermeable beds or beds of distinctly lower permeability than that of the aquifer itself; an aquifer containing confined ground water. Syn: artesian aquifer.

Confining Bed: A confining bed is a unit of distinctly less permeable geologic material stratigraphically adjacent to an aquifer. "Aquitard" is a commonly used synonym. Confining beds can have a wide range of hydraulic conductivities and a confining bed of one area may have a hydraulic conductivity greater than an aquifer of another area.

Drawdown: The vertical distance between the static water level and the surface of the cone of depression at a given location and point of time.

Effective Porosity: Effective porosity refers to the amount of interconnected pore space and fracture openings available for the transmission of fluids, expressed as the volume of interconnected pores and openings to the volume of rock.

Ground Water: Subsurface water that occurs beneath the water table in soils and geologic formations that are fully saturated.

Hydraulic Conductivity: Hydraulic conductivity, K, replaces the term "coefficient of permeability" and is a volume of water that will move in unit time under a unit hydraulic gradient through a unit area measured at right angles to the direction of flow. Hydraulic conductivity is a function of the properties of the medium and the fluid viscosity and specific gravity; intrinsic permeability times specific gravity divided by viscosity. Dimensions are L/T with common units being centimeters per second or feet/day.

Hydraulic Gradient: Hydraulic gradient is the change in head per unit of distance in the direction of maximum rate of decrease in head.

Hydraulic Head: Hydraulic head is the sum of two components: the elevation of the point of measurement and the pressure head.

Intrinsic Permeability: Intrinsic permeability, k, is a property of the porous medium and has dimensions of L^2. It is a measure of the resistance to fluid flow through a given porous medium. It is, however, often used incorrectly to mean the same thing as hydraulic conductivity.

Porosity: Porosity of a rock or soil expresses its property of containing interstices or voids and is the ratio of the volume of interstices to the total volume, expressed as a decimal or percentage. Total porosity is comprised of primary and secondary openings. Primary porosity is controlled by shape, sorting and packing arrangements of grains and is independent of grain size. Secondary porosity is that void space created sometime after the initial formation of the porous medium due to secondary solution phenomena and fracture formation.

Potentiometric Surface: Potentiometric surface is an imaginary surface representing the static head of ground water and defined by the level to which water will rise in a well under static conditions. The water table is a particular potentiometric surface for an unconfined aquifer representing zero atmospheric gage pressure.

Recharge Zone: A recharge zone is the area in which water is absorbed and added to the saturated soil or geologic formation, either directly into a formation, or indirectly by way of another formation.

Residual Drawdown: The difference between the original static water level and the depth to water at a given instant during the recovery period.

Saturated Zone: The saturated zone is that part of the water-bearing material in which all voids are filled with water. Fluid pressure is always greater than or equal to atmospheric, and the hydraulic conductivity does not vary with pressure head.

Specific Capacity: The rate of discharge of a water well per unit of drawdown, commonly expressed in gpm/ft. It varies with duration of discharge.

Specific Storage: Specific storage, S, is defined as the volume of water that a unit volume of aquifer releases from storage because of expansion of the water and compression of the matrix or medium under a unit decline in average hydraulic head within the unit volume. For an unconfined aquifer, for all practical purposes, it has the same value as specific yield. The dimensions are L^{-1}. It is a property of both the medium and the fluid.

Specific Yield: Specific yield is the fraction of drainable water yielded by gravity drainage when the water table declines. It is the ratio of the volume of water yielded by gravity to the volume of rock. Specific yield is equal to total porosity minus specific retention. Dimensionless.

Storage Coefficient: The storage coefficient, S, or storativity, is defined as the volume of water an aquifer releases from or takes into storage per unit surface area of aquifer per unit change in hydraulic head. It is dimensionless.

Transmissivity: Transmissivity, T, is defined as the rate of flow of water through a vertical strip of aquifer one unit wide extending the full saturated thickness of the aquifer under a unit hydraulic gradient. It is equal to hydraulic conductivity times aquifer saturated thickness. Dimensions are L^2/t.

Unconfined Ground Water: Unconfined ground water is water in an aquifer that has a water table. Also, it is aquifer water found at or near atmospheric pressure.

Unsaturated Zone: The unsaturated zone (also referred to as the vadose zone) is the soil or rock material between the land surface and water table. It includes the capillary fringe. Characteristically this zone contains liquid water under less than atmospheric pressure, with water vapor and other gases generally at atmospheric pressure.

Water Table: The water table is an imaginary surface in an unconfined water body at which the water pressure is atmospheric. It is essentially the top of the saturated zone.

Well Efficiency: The well efficiency is the theoretical drawdown divided by the measured drawdown. The theoretical drawdown is estimated by using pumping test data from several observation wells to construct a distance drawdown graph to estimate drawdown in the pumping well if there were no losses.

Selected Material

1) Allen Linda, et al., 1989. Handbook of Suggested Practices for theDesign and Installation of Ground Water Monitoring Wells. U.S. EPA, Office of Research and Development, EPA 600/4-89/034, 388 pp.

2) Anderson, K. E., 1971. Water Well Handbook. Missouri Water Well and Pump Contractors Association.

3) ASTM Committee D-18 on Soil and Rock, D4750-1987. Standard Test Method for Determining Subsurface Liquid Levels in a Borehole or Monitoring Well (Observation Well). American Society of Testing Materials.

4) ASTM Committee D-18 on Soil and Rock, D5092-1990. Standard Practice for Design and Installation of Ground Water Monitoring Wells in Aquifers. American Society of Testing Materials.

5) ASTM Committee D-18 on Soil and Rock, D4043-1991. Standard Guide for Selection of Aquifer Test Method in Determining of Hydraulic Properties By Well Techniques. American Society of Testing Materials.

6) ASTM Committee D-18 on Soil and Rock, D4044-1991. Standard Test Method for (Field Procedures) Instantaneous Change in Head (Slug Tests) for Determining Hydraulic Properties of Aquifers. American Society of Testing Materials.

7) ASTM Committee D-18 on Soil and Rock, D4050-1991. Standard Test Method (Field Procedure) for Withdrawal and Injection Well Tests for Determining Hydraulic Properties of Aquifer Systems. American Society of Testing Materials.

8) ASTM Committee D-18 on Soil and Rock, D4104-1991. Standard Test Method (Analytical Procedure) for Determining Transmissivity of Nonleaky Confined Aquifers by Overdamped Well Response to Instantaneous Change in Head (Slug Test). American Society of Testing Materials.

9) ASTM Committee D-18 on Soil and Rock, D4106-1991. Standard Test Method (Analytical Procedure) for Determining Transmissivity and Storage Coefficient of Nonleaky Confined Aquifers by the Modified Theis Nonequilibrium Method. American Society of Testing Materials.

10) Barcelona, M. J., J. P. Gibb, and R. A. Miller, 1983. A Guide to the Selection of Materials for Monitoring Well Construction and Ground Water Sampling. Illinois State Water Survey, ISWS Contract Report 327, Urbana, IL. 28 p.

11) Bentall, R., et al., 1963. Shortcuts and Special Problems in Aquifer Tests, U.S. Geological Survey Water Supply Paper 1545-C 117 pp. 4.

12) Black, J. H. and K. L. Kip, 1977. Observation Well Response Time and Its Effect Upon Aquifer Test Results. Journal of Hydrology (1977), pages 297-306.

13) Bredehoeft, J. D., et al., 1983. Regional Flow in the Dakota Aquifer: Study of the Role of Confining Layers. U.S. Geological Survey Water Supply Paper 2237.

14) Campbell, M. D. and J. H. Lehr, 1972. Water Well Technology. McGraw-Hill Book Co., New York, 681 pp.

15) Clark, W. E., 1967. Computing the Barometric Efficiency of a Well. Jour. Hydraulic Division Amer. Soc. Civ. Engr. 93(HY4): 93-98.

16) Dawson, K. J., and J. D. Istok, 1991. Aquifer Testing: Design and Analysis of Pumping and Slug Tests. Lewis Publishers, Chelsea, MI, 344 pp.

17) Driscoll, F. G., 1986. Ground Water and Wells, 2nd Edition. Johnson Division, St. Paul, MN, 1089 pages.

18) Ferris, J. G., D. B. Knowles, R. H. Brown and R. W. Stallman, 1962. Theory of Aquifer Test. U.S. Geological Survey Water Supply Paper 1536-E, pp 69-174.

19) Freeze, R. Allen and John A. Cherry, 1979. Groundwater. Prentice-Hall, Inc., Englewood Cliffs, NJ 604 pp.

20) Glover, R. E., 1966. Ground Water Movement. U.S. Bureau of Reclamation Engineering Monograph No. 31.

21) Hamlin, S. N., 1983. Injection of Treated Wastewater for Ground Water Recharge in the Palo Alto Baylands, CA. Hydraulic and Chemical Intervention, U.S. Geological Survey Water Resources Investigation 82 - 4121.

22) Kruseman, G. P. and N. A. de Ridder, 1991. Analysis and Evaluation of Pumping Test Data, 2nd Edition. International Institute for Land Reclamation and Improvement, Wageningen, The Netherlands, 377 pp.

23) King, H. W., 1982. Handbook of Hydraulics, McGraw-Hill Book Co., New York.

24) Leopold and Stevens. Stevens Water Resources Data Book. Beaverton, WA, 1987.

25) Lohman, S. W., 1972. Ground Water Hydraulics. U.S. Geological Survey Professional Paper 708.

26) Osborne, P. S, 1969. Analysis of Well Losses Pertaining to Artificial Recharge, M. S. Thesis, University of Arizona.

27) Rorabough, M. I., 1953. Graphical and Theoretical Analysis of Step Drawdown Test of Artesian Wells. Proc. American Society Civil Engineers., V. 79, Sep 362, 23 pp.

28) Schafer, D. C., 1978. Casing Storage Can Effect Pumping Test Data. The Johnson Drillers Journal, pp. 1-5.

29) Stallman, R. W., 1971 (Reprinted 1983) Aquifer-Test Design, Observation and Data Analysis. U.S. Geological Survey, Techniques of Water Resources Investigations, Book 3, Chapter B1; U.S. Government Printing Office, Denver, CO, 26 pages.

30) U.S. Bureau of Reclamation, Revised 1984. Water Measurement Manual. U.S. Department of the Interior, U.S. Government Printing Office, Denver, CO, 327 pp.

31) U.S. Environmental Protection Agency, 1982. Handbook for Sampling and Sample Preservation of Water and Wastewater. EPA- 600/4-82-029.

32) Walton, W. C., 1962. Selected Analytical Methods for Well and Aquifer Evaluations. Illinois State Water Survey Bulletin 49, Urbana, IL, 81 pp.

33) Walton, W. C., 1970. Ground Water Resource Evaluation. McGraw-Hill Book Co., New York, NY, 664 pp.

☆U.S. GOVERNMENT PRINTING OFFICE: 1993 - 750-002/60155

Fla

GUIDELINES FOR DEVELOPING

A

STANDARD AQUIFER PERFORMANCE TEST PROGRAM

INTRODUCTION

When the impacts resulting from an existing or proposed ground water withdrawal cannot be adequately evaluated due to a lack of reliable hydrogeologic data, staff may request the applicant or permittee proposing the ground water withdrawal to develop and implement an aquifer testing program.

As an aid to the applicant or the permittee, staff has compiled a set of guidelines for developing and implementing a program. The guidelines are not meant to portray an inflexible attitude about the manner in which the program should be conducted, but are only designed to point out the general and basic aspects of an acceptable procedure for hydrogeologic data collection, presentation and interpretation. Depending on circumstances, alternative methodologies may be necessary. These circumstances should be discussed with staff prior to any well construction.

The guidelines are subdivided into separate sections dealing with: 1) the initial site investigation, 2) the construction of on-site wells, 3) the step drawdown test, 4) the constant rate discharge test, 5) the analysis of constant rate discharge test data, and 6) the contents of the Hydrogeologic Report.

The staff should be notified before any major deviations from the proposed guidelines are instituted.

The successful completion of an aquifer testing program does not necessarily result in a staff recommendation for the allocation of the quantity of water requested by the applicant or permittee. The data collected during the program, however, often supports a request for the withdrawal of ground water.

1. Initial Site Evaluation

   The initial site evaluation should be performed as the first step in an APT program. During the initial site evaluation, the following items should be addressed:

   a. The most probable drilling depth and yield for a proposed test production well. These should be determined by reviewing existing data such as geologic well logs and hydrogeologic reports. A preliminary cross section indicating the thickness and water quality (if appropriate)

associated with the various production and confining zones should be constructed prior to selecting a drilling depth.

b. The location of possible sources of ground water contamination.

c. The location of adjacent surface water bodies that may interact with the ground water system.

d. The best means of routing the test production well's discharge water off-site.

e. The location, total depth, cased depth, withdrawal rate, pumping schedule, pre-pumping water level, and specific capacity of adjacent pumping wells. If possible, the water levels should be referenced to the National Geodetic Vertical Datum (NGVD).

f. The location, total depth, cased depth, and static water level of existing wells that may serve as observation wells during the constant rate discharge. If possible, the water levels should be referenced to the NGVD.

g. The tentative locations, total depths and cased depths for the proposed test production well and observation wells necessary for the constant rate discharge test (see the subsection on Construction of On-Site Wells for recommended number of wells, radial distances and depths). The potential adverse impacts that proposed withdrawals may have on existing uses should be considered with locating the test production well.

After completing the initial site investigation the applicant or permittee should schedule a meeting and present the proposed testing program to the staff for discussion. The proposed program should specify the location, total depth and cased depth of the proposed test production well and observation wells; the pump discharge rate; the routing of pump discharge water; the method and frequency of collecting water quality data. The proposed program should follow the criteria specified in the following sections of these guidelines unless otherwise agreed to by the staff. All proposed aquifer testing programs should be discussed with the staff prior to the applicant accepting bids on the construction of test wells, test production wells or any services associated with the project.

2. Construction of On-Site Wells

In most cases, up to three production zone observation wells and one shallow or adjacent aquifer observation well may be necessary to conduct a constant rate discharge test. The construction of

observation wells may be initiated after the proposed aquifer testing program has been agreed upon. The number of observation wells and radial distance from the test production well to observation wells may vary for a constant rate discharge test conducted within the Floridan Aquifer. The most distant observation well from the test production well may be designed to satisfy possible limiting conditions accompanying certain Consumptive Use Permits. The production zone observation wells should have screened or open hole segments that correspond to those of the test production well. The shallow or adjacent aquifer observation well should be located well within the calculated cone of depression of the test production well or located as determined by the step drawdown analysis. These wells should be constructed such that the anisotropic characteristics of the production zone (in the water table aquifer case) or the extent of the hydraulic connection across the semi-confining layers overlying or underlying the production zones (in the leaky artesian aquifer case) can be determined. All wells should be developed in a manner such that a good hydraulic connection exists between the wells and the zones being monitored. The cased portion of all production zone observation wells penetrating a confining strata of low permeability material should be cemented or sealed to the base of the confining strata.

During the installation of the test production well and all observation wells, cuttings should be collected every five feet or formation change, whichever comes first. When drilling wells in the Floridan Aquifer, the construction method used must be cable tool, reverse air, or air rotary once contact is made with carbonate strata of the Florida Aquifer. Cuttings should be collected every ten feet or formation change, whichever comes first.

During the installation of the test production well, sampling for water quality will commence as soon as possible below the bottom of the casing upon critical penetration of the water bearing formation. Additional samples should be collected at formation change, or when encountering a noticeable change of flow, whichever comes first. Samples collected at detected flow zones and formation changes will be analyzed for the following parameters:

chlorides (Cl^-)
sodium (Na)
potassium (K0
calcium (Ca)
iron (Fe)
magnesium (Mg)
total alkalinity ($HCO^- + CO_3^=$)
total hardness
total dissolved solids
specific conductance

pH
temperature

All water quality analyses for the above parameters must be conducted by a qualified, reputable lab. Copies of all analyses must be included in the Hydrogeologic Report. Additionally, water quality samples shall be collected at the addition of each drill rod and analyzed on-site for the following parameters:

chlorides (Cl-)
specific conductance
temperature
pH

A geologic log should be made for each well and a hydrogeologic cross section for the site of investigation should be developed using the geologic logs from each well. Geophysical logging of each well will be accomplished to determine final construction details and verify hydrologic data. The drill should include a device (meter or weir) to measure the discharge of formation water.

3. Step Drawdown Test

A step drawdown test should be performed on the completed and developed test production well as the third step in the aquifer testing program. The data collected during the step drawdown test can be used to predict the drawdown that will occur within the test production well at various discharge rates.

To perform the step drawdown test, it is necessary to have a means of obtaining access to the inner casing of the test production well so that water levels within the casing can be determined by using an electric water level probe or metal measuring tape. The pump used during the step drawdown test must be capable of operating at various discharge rates. A calibrated orifice weir or some other calibrated flow meter should be installed on the discharge side of the pump so that discharge can be determined. If the pumped water cannot be routed to a storage tank or off-site through an existing water distribution system, a closed conduit or plastic lined trench should be used to transport the pumped water so as not to cause ponding of water. As an alternative, it may be possible to route the pumped water to an existing adjacent surface water body.

The step drawdown test should be performed at four constant discharge rates which represent approximately 100%, 85%, 65%, and 50% of the design capacity of the test production well. The pumping period for each step should be a minimum of 30 minutes and the aquifer should be allowed to recover a minimum of 20 minutes after each pumping period or until the water level within the test production well has recovered to within 0.05 feet of the initial static water level. After the drawdown for 30 minutes of pumping

has been determined, the discharge valve should be adjusted to obtain the constant discharge rate for the next step and the pump should be turned off to allow ground water levels to recover. The drawdown is the difference between the initial static water level within the test production well casing and water level within the test production well casing after 30 minutes of constant discharge pumping. Water levels should be determined to the nearest 1/10 of a foot. A copy of the raw data collected during the step drawdown test should be provided to the staff.

The additional head loss that occurs as ground water flows into the test production well can be calculated using the coefficients determined by plotting the constant discharge (Q) for each step versus the specific drawdown (s/Q) for each step on arithmetic scale paper. Drawdowns observed within the test production well should be adjusted for well entrance losses and for partial penetration. Corrected drawdowns can then be used in a distance versus drawdown plot to determine the transmissivity of the aquifer or can be calculated by acceptable numerical procedures.

4. Constant Rate Discharge Test

Prior to initiating the constant rate discharge test, the prepumping static water level (referenced to the NGVD) should be determined in all observation wells, the test production well and adjacent surface water bodies. These water levels should be determined to the nearest 1/10 of a foot. If the constant rate discharge test is to be performed within 2,000 feet of tidal water or an adjacent pumping well, a continuous water level recorder should be placed on the well nearest the tidal water or adjacent pumping well for a minimum of 24 hours. The magnitude of the water level fluctuations indicated by the hydrograph will indicate if the raw drawdown and recovery data collected during the constant rate discharge test should be adjusted.

The time distribution and volume of adjacent pumpage and rainfall occurring two hours prior to initiating the constant rate discharge test should be recorded. If possible, adjacent pumpage should be curtailed and rainfall should not occur two hours prior to initiating the constant rate if pumpage cannot be curtailed.

The constant rate discharge test should be conducted as the fifth step in the aquifer testing program. When a constant rate discharge test is conducted within the Floridan Aquifer, a minimum 48 hour discharge period is recommended or until a steady state is achieved.

Not less than two hours prior to initiating the constant rate discharge test, the valve located on the discharge site of the test production well pump should be adjusted so that the initial discharge of the pump will be close to the constant discharge rate

selected for the test. If possible, the discharge rate should approach the design capacity of the well. The actual pump discharge should be recorded throughout the test. If the pumped water cannot be routed to a storage tank or off-site through an existing water distribution system, a closed conduit or plastic lined trench should be used to transport the pumped water to an area 500 feet down gradient from the test production well before it is discharged onto the land surface. As an alternative, it may be possible to route the pumped water to an existing adjacent surface water body.

Drawdown and recovery water level measurements should be made to the nearest 1/100 of a foot. A predetermined schedule for measuring drawdowns should be initiated as soon as the test production well pump starts to discharge. It is suggested that drawdown measurements be made according to the following schedule:

Frequency of Measurement	Time after Pumping Started
Approx. every 15 seconds	0 to 2 minutes
Approx. every 30 seconds	2 to 5 minutes
Approx. every 1 minute	5 to 15 minutes
Approx. every 5 minutes	15 to 60 minutes
Approx. every 10 minutes	60 to 100 minutes
Approx. every 0.5 hour	2 to 5 hours
Approx. every 1 hour	5 to 72 hours

Water quality samples are a vital part of the constant rate discharge test. Water samples shall be collected at intervals as determined are necessary for the site:

The samples collected are to be analyzed for the following parameters:

chlorides (Cl^-)
sodium (Na)
potassium (k)
calcium (Ca)
total iron (Fe)
magnesium (Mg)
total alkalinity ($HCO^- + CO_3^{=}$)

total hardness
total dissolved solids
temperature (field)
specific conductance
pH (field)

All water quality analyses must be done by a qualified, reputable lab. Copies of all analyses must be included in the Hydrogeologic Report.

After pumping the well at a constant rate for the agreed upon discharge period, the pump is stopped and recovery water level measurements are made. Recovery data should be collected for a four hour period after the pump is stopped or until water levels have recovered within 0.05 feet of the initial static water level. It is suggested that recovery measurements be made according to the following schedule:

Frequency of Measurement	Time after Pumping Ceased
Approx. every 15 seconds	0 to 2 minutes
Approx. every 30 seconds	2 to 5 minutes
Approx. every 1 minute	5 to15 minutes
Approx. every 5 minutes	15 to 60 minutes
Approx. every 10 minutes	60 to 100 minutes
Approx. every 0.5 hour	2 to 4 hours

The time distribution and volume of adjacent pumpage and on-site rainfall that occurred during the constant rate discharge test should be recorded. The constant rate discharge test should be terminated if water levels in observation wells start to rise due to the effects of recharge from rainfall.

A copy of all raw data collected during the constant rate discharge test should be provided to the staff.

5. Analysis of Constant Rate Discharge Test Data

The constant rate discharge test raw data should be analyzed by means of analytical or graphical techniques which are based on theory which reasonably depicts on-site conditions. The analysis should determine the transmissivity (gpd/ft) and storage coefficient of the production zone as well as the leakance (gpd/ft) of any overlying or underlying confining zones. Recharge from surface water sources should be considered in the analysis. An attempt should be made to explain inconsistencies in the observed data. When necessary, the raw drawdown and recovery data should be adjusted to account for the effects of tidal fluctuations, adjacent pumpage and the effects of partial penetration.

As an aid in analyzing data collected from a water table aquifer system, the applicant or the permittee may want to refer to the works of Neuman (1975) on fully penetrating water table wells with no storage capacity, Papadopulos (1967) on fully penetrating non-leaky artesian wells with storage capacity, Streltsova (1974) on partially penetrating water table wells with no storage capacity and Boulton and Streltsova (1976) on partially penetrating water table wells with storage capacity.

As an aid in analyzing data collected from a leaky artesian aquifer system, the applicant or permittee may want to refer to the works of

Hantush and Jacob (1955) and Hantush (1959) on fully penetrating leaky artesian aquifer wells with no storage capacity and no aquitard storage changes, no storage capacity and aquitard storage changes, Papadopulos (1967) on full penetrating non-leaky artesian aquifer wells with storage capacity and Hantush (1961) and Weeks (1969) on the effects of partial penetration of aquifer wells with no storage capacity. Additional useful references dealing with the analysis of data collected during a constant rate discharge test are Kruseman and DeRidder (1970), Lohman (1972) and Walton (1970). The above references are fully cited in the attached bibliography.

6. Hydrogeologic Report

As the final step in an aquifer testing program, the applicant or permittee should assemble an organized hydrogeologic report. The report should include the following items:

a. A section describing the geologic and hydrogeologic conditions that exist at the site of investigation. The description should incorporate a hydrogeologic cross section developed from the geologic and geophysical well logs compiled for the test production well and the production zone observation wells. The cross section should indicate the thickness and relative location of each production and confining zone. Also, water quality with depth and the relative head for each zone should be illustrated on the cross section.

b. A section describing the construction of the test production well, the four observation wells required for the constant rate discharge test and any other adjacent wells. The cased and uncased depth of each well should be indicated on a hydrogeologic cross section. The locations of pertinent wells and surface water bodies should be indicated on a 7 1/2 minute USGS quadrangle map. The report should indicate the distance from each well or surface water by to the test production well.

c. A section describing the procedure used for running the step drawdown test and the constant rate discharge test as well as the technique used in determining the discharge of the test production well, in routing the pumped water away from the test production well and in determining the changes in water levels.

d. A section describing how the data collected during the step drawdown test and the constant rate discharge test was analyzed to determine the hydraulic characteristics of the hydrogeologic system. The analysis of the data collected during the step drawdown test should include a plot of Q

vs. s/Q. The analysis of the data collected during the constant rate discharge test should include a figure indicating the drawdown data collected from each well on a single plot of log t/r vs. log s on log-log paper (K & E Log paper No. 46-7522) should be used when plotting constant rate discharge test data so that published type curves can be used to check indicated match points), a figure indicating the drawdown data collected from each well on a single plot of log t/r vs. s on semi-log paper and figure indicating the drawdown data collected form each well on a plot of log r vs. s on semi-log paper.

Any of the above figures not discussed in the text of the hydrogeologic report should be included in the report's Appendix. If a graphical solution involving type curves is used in the determination of the aquifer characteristics, the pertinent curves and match points should be indicated. The report should indicate the basis for selecting the value of transmissivity, storage coefficient and leakance most representative of the hydrogeologic system.

e. A section describing the impacts that proposed withdrawals will have on water levels and water quality within the selected production zone and adjacent confining zones or production zones. If the proposed withdrawals are from a water table aquifer system, the applicant or permittee should calculate the theoretical time variant cone of depression that would develop in the absence of rainfall after 30, 60 and 100 days of pumpage at the proposed withdrawal rate. The calculations for a water table aquifer system should utilize the most representative transmissivity value derived from the aquifer testing program and a storage coefficient of 0.2.

If the proposed withdrawals are from a leaky artesian aquifer system, the applicant or permittee should calculate the threoretical time variant cone of depression that would develop after 30, 60 and 100 days of pumpage at the proposed withdrawal rate and the steady state cone of depression that would develop at the proposed withdrawal rate. The calculations for a leaky artesian system should utilize the most representative transmissivity storage coefficient and leakance values derived from the testing program. In all cases, the applicant or permittee should calculate the cumulative cone of depression when withdrawals from multiple wells are proposed. The resultant cones of depression should be indicated on a 7 1/2 minute USGS quadrangle map.

The applicant should address the impacts that lowered water levels will have on the surrounding environment and adjacent existing legal uses.

f. A section tabulating all water level, rainfall, pump discharge and adjacent pumping data collected throughout the testing program. Copies of hydrographs should also be included in this section. All water levels should be referenced to the National Geodetic Vertical Datum (NGVD).

BIBLIOGRAPHY

Boulton, N.S. and T. D. Streltsova, 1976. The drawdown near an abstraction well of large diameter under non-steady conditions in an unconfined aquifer. Journal of Hydrology. v. 30, pp. 29-46.

Hantush, M. S. and C. E. Jacob, 1955. Steady three-dimensional flow to a well in a two layered aquifer. Trans. Am. Geophys. Un. 36.

Hantush, M. S., 1959. Non-steady flow to flowing wells in leaky aquifers. Jour. Geophys. Res. 64. pp. 1043-1052.

Hantush, M. S., 1961. Drawdown around a partially penetrating well. Proc. Am. Soc. Civil Engrs.. 87 HY4, pp. 83-98.

Hantush, M.S., 1964. Hydraulics of wells. In Advance in Hydroscience, Ed. Ven Te Chow. v. 1. Academic Press, Inc., New York, pp. 281-442.

Kruseman, G. P., De Ridder, N. A., 1970. Analysis and Evaluation of Pumping Test Data. Internat. Inst. for Land Reclamation and Improvement, Bull. 11, Wageningen, The Netherlands.

Lohman, S. W., 1972. Ground-Water Hydraulics. U. S. Geological Survey Professional Paper 708.

Neuman, S. P., 1975. Analysis of pumping test data from anisotropic unconfined aquifers considering delayed gravity response. Water Resources Research. v. 11, No. 2, pp. 329-342.

Papadopulos, I. S., 1967. Drawdown distribution around a large-diameter well. Proc. of Ground Water Hydrology Symposium, Amer. Water Resources Assn. pp. 157-167

Streltsova, T. D., 1974. Drawdown in compressible unconfined aquifer. Jour. of the Hydraulics Division, Proc. of ASCE. v. 100, no. HY11, pp. 1601-1616.

Walton,W. C., 1970. Groundwater Resources Evaluation. McGraw Hill Book Company, New York. 644 pp.

Weeks, E. P., 1969. Determining the ratio of horizontal to vertical permeability by aquifer-test analysis. Water Resources Research. v. 5, no. 1, pp. 196-214.

Aquifer Test Procedure

Application No.:

Applicant:

Project:

Assigned Administration Staff:

It has been determined by the Water Resources Administration that to properly evaluate the above referenced application, it will be necessary for the applicant to perform an aquifer yield test. The purpose of the yield test and the analysis of the data observed during performance of the test is to determine and/or estimate the effect of the proposed appropriation upon the water quality and natural resources of the State.

If a test well (or wells) is to be drilled for the performance of required testing, the Administration staff shall be notified by the applicant at least 48 hours prior to the scheduled beginning of drilling. The Administration may specify that the test well(s) and/or production well(s) shall be made available to the Administration for geophysical logging. Detailed geophysical logging requirements shall be specified by the Administration and such specifications shall be communicated to the applicant prior to finalization of the aquifer test specifications.

This Aquifer Test Procedure is intended as an outline of a method of conducting an aquifer test which will yield data, an analysis of which can be used to determine aquifer coefficients.

The applicant is responsible for the furnishing of, and proper selection, installation, and operation of all test instruments and equipment, and for proper observation, collection and analysis of the test data. It will be the applicant's responsibility to analyze the test data to address such issues as: (a) determination of the aquifer characteristics of transmissivity, storage coefficient, leakance, etc.; (b) long term well yield and drawdown in the pumping well; (c) time-distance-drawdown projections in affected aquifers; (d) potential for saltwater intrusion and/or other groundwater contamination; (e) other issues as required. The data gathered during the prescribed testing and the analysis of such data will be examined by the Administration staff for accuracy and methodology. Data and analysis will be used by the Administration in part to arrive at a decision to grant, modify, or deny the requested permit.

Prior to testing, the applicant shall confer with the Administration staff to determine if there are to be any special requirements. All water level measurements shall be made using a calibrated electric water level meter (electric tape) unless otherwise specified in writing by Administration staff.

After installation of pumping equipment and any necessary measuring tubes and the development of the well and performance of step-drawdown tests, etc., all test and observation wells shall remain idle and unpumped for a period of at least 24 hours prior to the beginning of the pumping portion of the test. The pumping period of the test will generally be either 24 or 72 hours in duration. The test duration for this application will be specified by Administration staff. Following the pumping period is a 12 hour non-pumping period during which the recovery in all test wells will be observed and recorded.

Water pumped during the testing shall be directed away from the well site by pipe or open channel and shall be approved by Administration staff. The applicant shall be responsible for water disposal.

At the start of pumping the flow shall immediately be adjusted to and continuously maintained at the specified flow rate during the entire specified period of pumping. Water level measurements should be taken and recorded according to the following schedule: make measurements on the minute at one minute intervals during the first 10 minutes of the test (1 minute to 10 minutes elapsed time since pump start); at two minute intervals for the next 20 minutes (12 minutes to 30 minutes since start); at 5 minute intervals for the next 30 minutes (35 minutes to 60 minutes, or 1 hour since start); at 10 minute intervals for the next 2 hours (1 hour 10 minutes to 3 hours since start); at 30 minute intervals for the next 5 hours (3-1/2 hours to 8 hours since start); and every hour thereafter for the remainder of the pumping period. During the first hour of pumping, water levels should be measured simultaneously at all wells.

Two water samples shall be taken for water quality analysis. The first sample shall be taken after 12 hours of pumping. The second sample shall be taken during the final hour of pumping. All water samples shall be taken and handled in the manner prescribed by the laboratory which will do the analysis. The applicant shall be responsible for making arrangements for the taking, handling, and analysis of water samples in the specified manner. If a conductivity bridge is at site and continuous measurements of the conductivity are made hourly after the first 12 hours of pumping, the 12 hour water sample need not be taken. The final hour water quality sample is mandatory.

When pumping is stopped after the prescribed pumping period has been completed, water level measurements shall be observed and recorded according to the same schedule as was previously prescribed for pumping period water level observations and recordings.

All data observed during the test shall be recorded. Most data significant to aquifer testing is fugitive information. The monitored condition is generally in existence only at the moment of observation and must be recorded. When in doubt write it down. Better too much data than too little. Record everything out of the ordinary. Testing is expensive. The more data obtained, the better the benefit cost ratio.

Aquifer Test Procedure

A. Preparation

1. The pumping rate shall be determined in consultation with the Administration staff, taking into consideration the following:

   a. The sustained yield capability of the well to be tested.

   b. The quantity of water to be appropriated.

2. Arrangements shall be made by the applicant with a private or government testing laboratory for collection and analysis of water samples.

3. The Administration shall be notified at phone (301) 269-3675 at least 48 hours prior to the start of any testing procedures. Administration staff may witness any or all drilling and/or testing. If Administration staff are on site, they shall act as observers and advisors only.

B. Equipment

1. The applicant shall provide a pump capable of pumping the required quantity of water for the designated time at a constant flow rate.

2. The applicant shall provide equipment to regulate the flow of water from the well. The method and equipment for flow regulation shall be approved by Administration staff.

3. The applicant shall provide all equipment to measure flow. The method and equipment for measuring flow shall be approved by the Administration.

4. The applicant shall provide all equipment for water level measurement during aquifer testing. Water level measurement method and equipment shall be approved by Administration staff. To facilitate water measurement, measuring tubes shall be installed by the applicant in all wells to be measured in which pumping equipment is installed. Measuring tubes shall be installed by the applicant in observation wells where cascading water may interfere with accurate water level measurements.

5. The applicant shall provide all equipment, stationery, supplies, etc., necessary to record and keep all data observed during the testing.

C. Pump Testing and Data Collection

The applicant may desire to perform a step-drawdown test to ascertain the sustained yield capabilities of the well to be tested. Such a test may be performed in conjunction with development of the well. Such a test is encouraged but is generally not required.

D. The water quality sample taken during the final hour of pumping shall be analyzed by the applicant at a licensed laboratory for the following constituents:

Total Alkalinity	Magnesium
Bicarbonate	Manganese
Calcium	Nitrate
Carbonate	Total Nitrogen
Chloride	pH (Field)
Conductivity	Potassium
Total Dissolved Solids	Silica
Fluoride	Sodium
Total Hardness	Sulfate
Iron	

Temperature (deg. C. - temp of water being discharged to be taken during last hour of pumping)

Results of the water quality analysis shall be submitted to the Administration.

ATTACHMENT V

1. GWMA Map

Map of Ground Water Management Areas

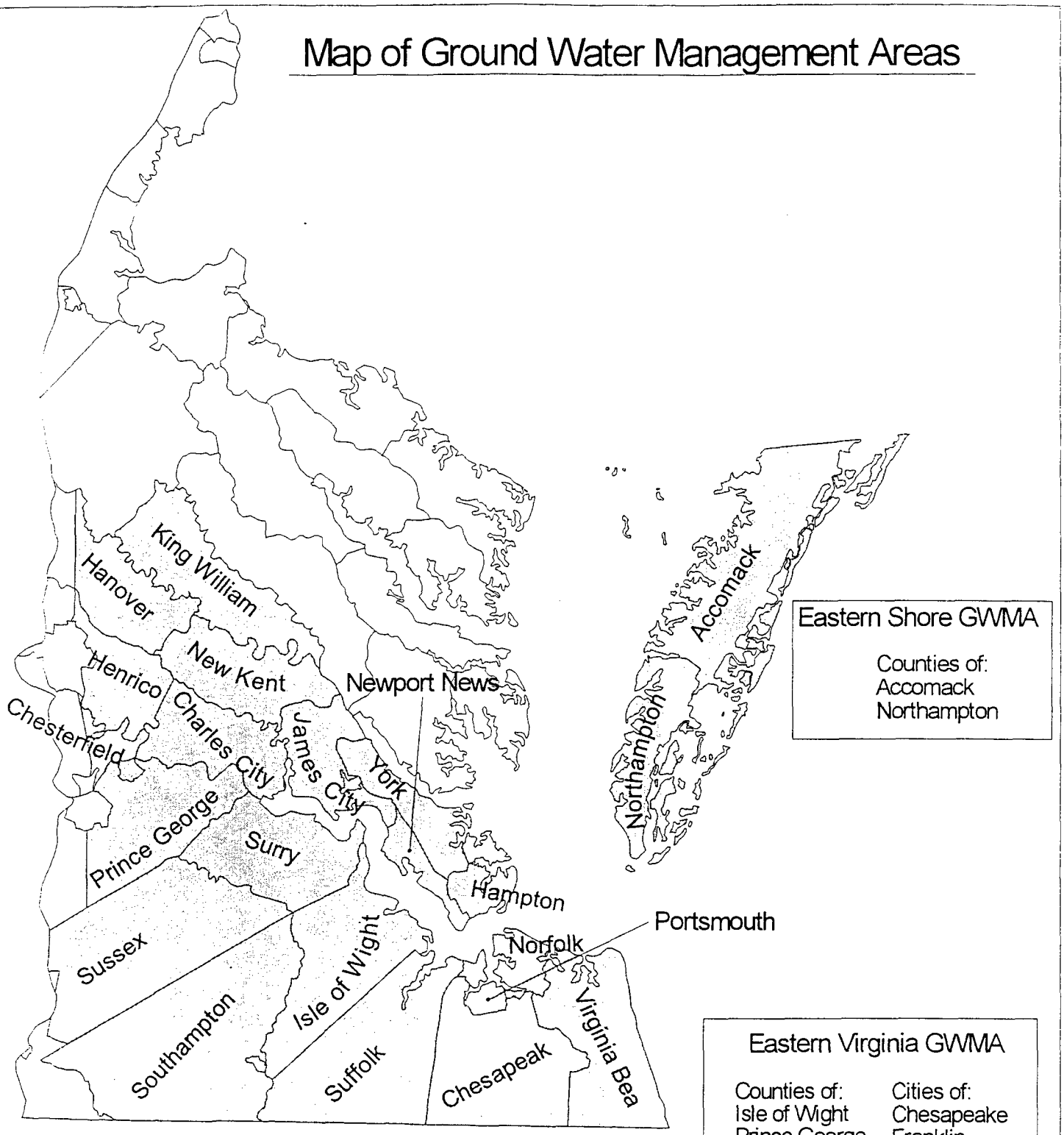

Eastern Virginia GWMA

Counties of:	Cities of:
Isle of Wight	Chesapeake
Prince George	Franklin
Southampton	Hopewell
Surry	Norfolk
Sussex	Portsmouth
Charles City	Suffolk
James City	Virginia Beach
King William	Hampton
New Kent	Newport News
York	Poquoson
Chesterfield*	Williamsburg
Henrico*	
Hanover*	

* Only those portions east of I-95 are included in the Eastern Virginia Ground Water Management Area

ATTACHMENT W

1. Revocation Agreement Form

REVOCATION AGREEMENT FORM

RETURN TO: PERMIT WRITER'S NAME
REGIONAL OFFICE
RO ADDRESS

SUBJECT: REVOCATION OF GROUND WATER WITHDRAWAL PERMIT NO. GWXXXXXXX

PERMITTEE: Name
Address
City, State Zip Code

FACILITY: Facility Name

REASON FOR REVOCATION: This permit is being revoked at the request of the permittee.

I hereby request and agree to the revocation of Ground Water Withdrawal Permit GWXXXXXXX and waive my right to a hearing regarding this revocation in accordance with Section 62.1-266 E. of the Ground Water Management Act of 1992.

NAME:_____

SIGNED:_____

TITLE:_____

DATE:_____

ATTACHMENT X

1. Regional Office Memo for Board Book

Regional Office Memo for Board Book

Regional DEQ Letterhead

TO: Board Members

FROM: Regional Director

SUBJECT: Ground Water Withdrawal Permit Revocation

DATE:

The Board's staff has received a request from [**Permittee**] to revoke their ground water withdrawal permit No. GW**XXXXXXX** associated with the [**Facility Name**] in [**County Name**] County. Ground water withdrawn subject to the authority of this permit was used for [**Beneficial Use**] at this site. The permittee does not intend to [**Beneficial Use**] at this site in the future and has no need for ground water withdrawal at this site. [**Permittee**] has provided a completed revocation agreement form that specifically waives their right to a hearing regarding this revocation as provided in Section 62.1-266 E. of the Ground Water Management Act of 1992.

ATTACHMENT Y

1. Revocation Notification Letter

Revocation Notification Letter

Regional DEQ Letterhead

DATE

Certified Mail
Return Receipt Requested

Permittee Name
Address
City, State Zip Code

Attn: Contact Name

RE: Ground Water Withdrawal Permit No. GWXXXXXXX
Facility Name, County

Dear Mr. [Contact Name]

At their **[Date]**, meeting, the State Water Control Board approved the revocation of the ground water withdrawal permit referenced in accordance with a memorandum dated (date of Board book memo). A copy of the memorandum is enclosed for your information.

As provided in Rule 2A:2 of the Supreme Court of Virginia, you have thirty days from the date of service (the date you actually received this decision or the date it was mailed to you, whichever occurred first) within which to appeal this decision by filing a notice of appeal in accordance with the Rules of the Supreme Court of Virginia with the Director, Virginia Department of Environmental Quality. In the event that this decision is served on you by mail, three days are added to that period.

Alternatively, any owner under §§ 62.1-44.16, 62.1-44.17 and 62.1-44.19 aggrieved by an action of the State Water Control Board taken without a formal hearing, or by inaction of the Board, may demand in writing a formal hearing of such owner's grievance, provided a petition requesting such a hearing is filed with the Board. Said petition must meet the requirements set forth in 9 VAC 25-230-130 of the Board's Procedural Rule No. 1. In cases involving actions by the Board, such petition must be filed within thirty days after such action is mailed to such owner by certified mail.

If you should have any questions, please contact [**RO Permit Writer**] of my staff at [**RO Phone Number**].

Sincerely,

Regional Director

Effective Date June 1, 1999

ATTACHMENT Z

1. Cover Letter for Transmittal of Change of Ownership Form to the Existing Owner

2. Change of Ownership Form

3. Change of Ownership Transmittal Letter to New Owner

DATE

CERTIFIED MAIL
RETURN RECEIPT REQUESTED

Name
Title
Permittee Name
Address

RE: Ground Water Withdrawal Permit GW00XXX00
Facility Name
Change of Ownership

Dear Permittee:

Thank you for your inquiry regarding the transferability of your permit to a new owner. 9 VAC 25-610-320 B. of the Ground Water Withdrawal Regulations requires the current owner to provide written notification to the State Water Control Board 30 days in advance of the proposed transfer of ownership. The notification must include a written agreement between the existing and proposed owner containing a specific **Date of Transfer** of permit responsibility, coverage and liability between them.

ttached for you convenience is a transfer of ownership notification form. Please complete the "Existing Owner" portion of the form and have the new owner complete the "Proposed Owner" portion of the form and return to me.

Furthermore, the name change must also be reflected in the Water Conservation and Management Plan, (and the Mitigation Plan). Please coordinate with the new owner to submit appropriately modified plans with the Change of Ownership Form.

Provided the Board does not notify you and the proposed owner of it's intent to amend the permit within the 30-day time period prior to the transfer date, a modified permit reflecting the new owners name will be issued to the new owner.

If you have questions, please contact this office.

Sincerely,

RO Permit Writer

Enclosure: Change of Ownership Form

c: DEQ (RO) File

Effective Date June 1, 1999

GROUND WATER WITHDRAWAL PERMIT

CHANGE OF OWNERSHIP AGREEMENT FORM

Effective ____[date]_____, the undersigned request the transfer of ownership of Ground Water Withdrawal Permit number GW00XXX00 from _Existing Owner Name_ to _Proposed New Owner Name_. Furthermore, _Proposed New Owner Name_ agrees to accept all responsibility, coverage, and liability associated with the Ground Water Withdrawal Permit and its supporting application.

Existing Owner Signature

SIGNED: _____

TITLE: _____

DATE: _____

Proposed New Owner Signature

SIGNED: _____

TITLE: _____

DATE: _____

Please print name(s) as they should appear on the amended Ground Water Withdrawal Permit.

OWNER: _____

ADDRESS:_____

PHONE:_____ FAX:_____ EMAIL:_____

FACILITY NAME: _____

FACILITY ADDRESS: _____

_____

Please print the new facility contact person, address, and phone number.

FACILITY CONTACT: _____

ADDRESS:_____

PHONE:_____ FAX:_____ EMAIL:_____

Effective Date June 1, 1999

Ground Water Withdrawal Permit
Transmittal Letter
Change of Ownership

[date]

Certified Mail
Return Receipt Requested

Name and Address

Dear:

Pursuant to Title 62.1, Chapter 25, Code of Virginia, 1950, as amended, (The Ground Water Management Act of 1992) the Director has authorized issuance of a modified permit to utilize ground water. The purpose of this modification is to authorize the change of ownership of Ground Water Withdrawal permit number GW00XXX00 to [new owner name]. This permit continues to limit the volume of withdrawal to [ ] gallons of groundwater per month and [ ] gallons of groundwater per year.

As the new owner of a ground water withdrawal permit, you are subject to all responsibility, coverage and liability of the permit.

The completed permit is enclosed for your records. Please note the requirement to record meter readings each month. Monthly use of ground water shall be reported to the [_____] Regional Office of the of the Department of Environmental Quality by the tenth (10 th) day of each January, April, July, and October on the attached Ground Water Withdrawal Reporting Form. You are responsible for making additional copies of the form.

If you have questions, please contact this office.

Sincerely,

RO Remediation Manager

Effective Date June 1, 1999

ATTACHMENT AA

1. Intent to Issue Letter

Regional Office Letterhead

Date

Certified Mail
Return Receipt Requested

Permittee Address

RE: Facility Name, Permit Number

Dear [ ] ;

The public comment period for your draft permit for withdrawals associated with your ground water withdrawal application closed on [date]. No significant comments were received regarding the draft permit and no public hearing will be required.

A final ground water withdrawal permit will not be issued prior the issuance of a Waterworks Operation Permit by the Virginia Department of Health. I will prepare the final ground water withdrawal permit as soon as you provide a copy of a waterworks operation permit for the facility. The terms and conditions of the final permit will be the same as the draft permit and the term of the permit will be ten years. I anticipate that a final ground water withdrawal permit can be issued within 15 days of my receipt of a copy of your waterworks operation permit.

If you have questions or concerns, please do not hesitate to contact me at [permit 'riter phone #].

Sincerely,

RO permit writer
Title

cc: RO Remediation Manager
Terry D. Wagner

ATTACHMENT BB

1. Permit Fee Refund Memo

Regional Office Memohead

SUBJECT: Ground Water Withdrawal Permit Fee Reimbursement for [Facility Name]

.O: Carol Rich, Finance

FROM: Regional Director

DATE:

COPIES: R0 File

[Facility Name] submitted check number [ ] in the amount of $2000.00, DC# [ ] for a new ground water withdrawal permit (paperwork attached) for the [facility name]. They have canceled their request for the increase in the amount of water withdrawal. They will accept a permit based on their historic withdrawal amount for a fee of $400.00. Please process a refund of $1600.00 to the address below:

Facility Name
Address
Attention: Contact Name

If you should have any questions or need further information on this matter, please let [RO permit writer name] know. His/Her phone number is [ ].

Effective Date June 1, 1999

REVISIONS

Effective Date of Original Guidance	March 1, 1994
Pages 8-24, Attachment B, Attachment M	Revised April 5, 1994
Effective Date of Amended Guidance	June 1, 1999