Attachment A

Flow Frequency Memorandum 7/12/11

MEMORANDUM

DEPARTMENT OF ENVIRONMENTAL QUALITY
Piedmont Regional Office
4949-A Cox Road Glen Allen, Virginia 23060

SUBJECT: Flow Frequency Determination / 303(d) Status
Black Swamp WWTF – VA0088978

TO: Emilee Carpenter

FROM: Jennifer Palmore, P.G.

DATE: July 12, 2011

COPIES: File, Margaret Smigo

The Black Swamp Wastewater Treatment Facility discharges to an unnamed tributary to Black Swamp in Sussex County, VA. The outfall is located at rivermile 5AXGJ000.19. Flow frequencies have been requested for this outfall for use in developing effluent limitations for the VPDES permit.

The USGS 7 ½' topographic Disputanta South Quadrangle shows the receiving stream to be a dry ditch which drains to an intermittent stream. The flow frequencies for dry ditch and intermittent streams are listed below:

Outfall 001:

1Q10 = 0.0 cfs	High Flow 1Q10 = 0.0 cfs
1Q30= 0.0 cfs	High Flow 7Q10 = 0.0 cfs
7Q10 = 0.0 cfs	High Flow 30Q10 = 0.0 cfs
30Q10 = 0.0 cfs	HM = 0.0 cfs
30Q5 = 0.0 cfs	

Due to its intermittent status, the receiving stream is considered a Tier 1 water. Effluent data should be used to characterize the stream during low flow periods.

During the 2010 305(b)/303(d) Water Quality Assessment, the receiving stream was not assessed for any of its designated uses, therefore it was considered a Category 3A water.

Although the receiving stream itself is not impaired, it is located within the study area for the Assamoosick Swamp & Tributaries Bacterial TMDL, which was approved by the EPA on 6/3/2010 and by the SWCB on 9/30/2010. The Black Swamp WWTF received an E. coli wasteload allocation of 1.01E+12 cfu/year. The TMDL states that the WLA was based on a design flow of 0.6 MGD at the applicable water quality standard of 126 cfu/100mL, however it appears that the correct WLA should have been 1.04E+12 cfu/year. Either the TMDL will need to be modified before the permit can be reissued or the permit would require an effluent limit of 122 cfu/100 mL.

If you have any questions concerning this analysis or need additional information, please let me know.

Attachment B

Facility Diagram

FIGURE 3-1

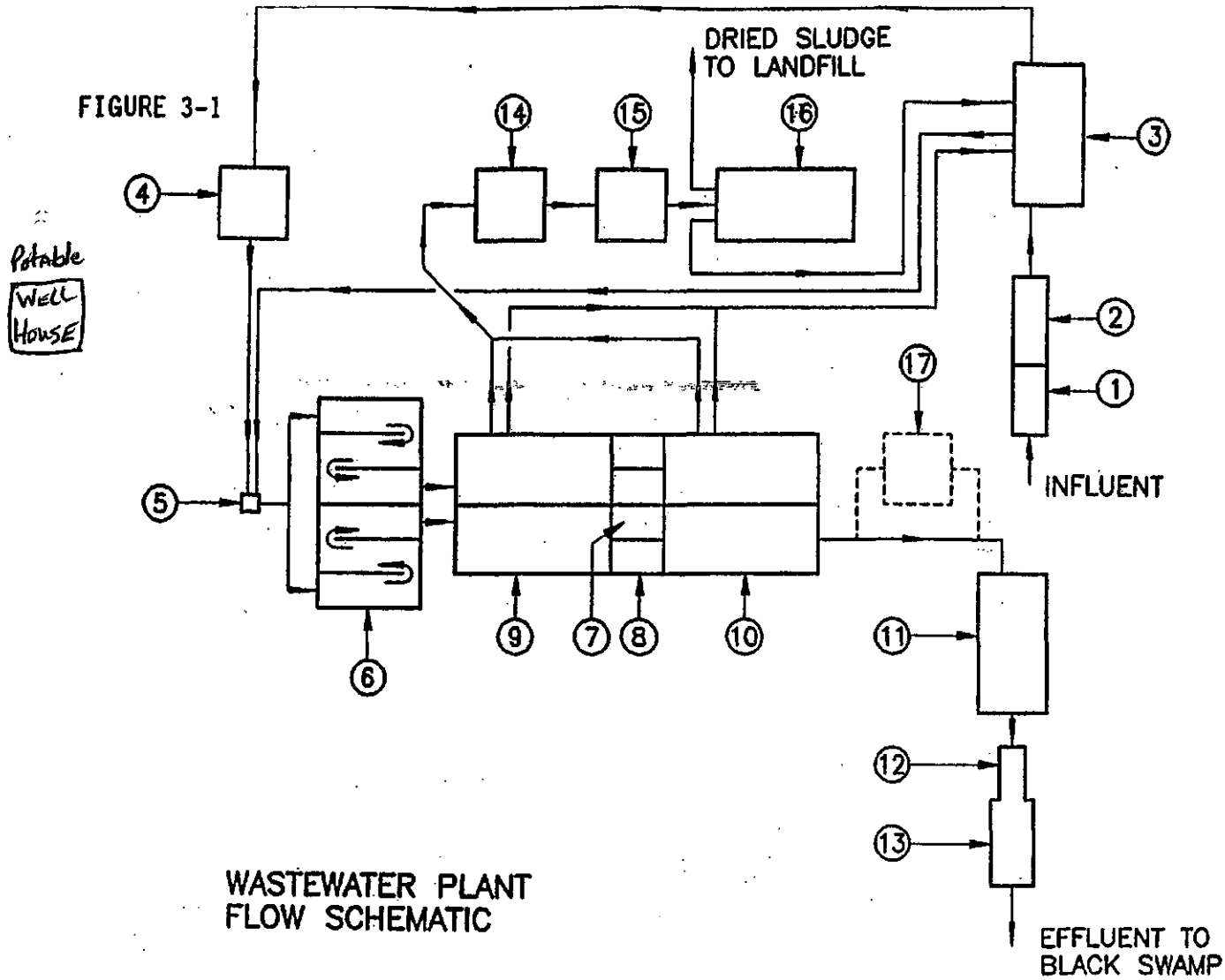

WASTEWATER PLANT
FLOW SCHEMATIC

1	SCREENING	10	FINAL CLARIFIER
2	AERATED GRIT CHAMBERS	11	CHLORINE CONTACT TANK
3	PUMPING STATION	12	DECHLORINATION
4	EQUALIZATION BASIN	13	POST – AERATION CHAMBER
5	FLOW SPLITTER BOX	14	AEROBIC DIGESTER
6	AERATION BASIN	15	SLUDGE PROCESSING
7	FLASH MIX BASIN	16	SLUDGE DEWATERING BEDS (For bi only
8	FLOCCULATION BASIN	~~17~~	~~FUTURE TERTIARY FILTERS~~
9	INTERMEDIATE CLARIFIER		

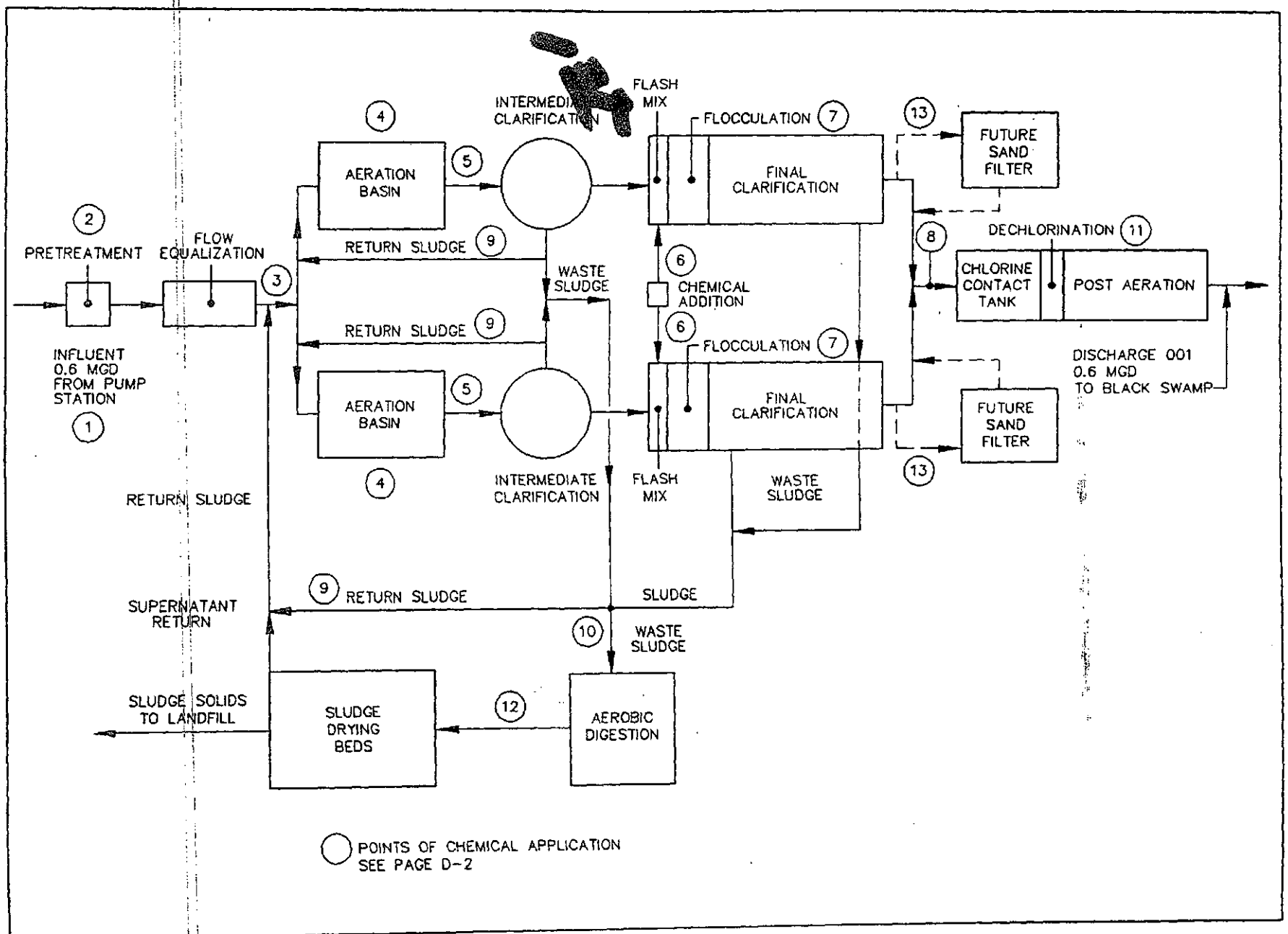

Figure 5 - Schematic of Wastewater Flow

CHAPTER 3

DESCRIPTION, OPERATION, AND CONTROL OF WASTEWATER TREATMENT PLANT

3.1 GENERAL

The treatment process used involves the biological treatment of raw waste by employing an extended aeration activated sludge process. Preliminary treatment consists of bar screens and aerated grit chambers. The wastewater is pumped to an equalization basin that equalizes inflow to the plant and provides a constant flow to the treatment process. After the flow equalization, the raw waste is split into two process trains that include the biological activated sludge reactors, intermediate biological sedimentation basins, and final clarification basins. After clarification the process flow from the two process trains is rejoined for chlorination, dechlorination, and post aeration prior to discharge. The waste sludge is aerobically digested and dried by vacuum assisted dewatering beds. A process flow schematic is provided in Figure 3-1.

The extended aeration activated sludge process involves a completely mixed system with a long hydraulic detention time and a high sludge age. Wastewater in the aeration tanks passes through fifteen complete mix compartments that simulate plug flow conditions. The wastewater then enters the intermediate clarifier for solids removal by settling. Chemical coagulation and additional solids removal is provided by the use of flash mixers, flocculators, and final clarifiers. Sludge obtained in this portion is either wasted to the aerobic digester or mechanically recycled to the aeration basin. The clarified wastewater then undergoes chlorination, dechlorination, and reaeration prior to discharge from the site.

The facilities have been designed such that effluent from the facility will have an average concentration of 10 mg/l of BOD_5 and the suspended solids concentration will be reduced to an average of 20 mg/l. The insoluble organic nitrogen is chemically removed to attain the TKN permit limit concentration of 3 mg/l.

3.2 DESCRIPTION OF PLANT TYPE AND FLOW PATTERN

Raw wastewater enters the Black Swamp Wastewater Treatment Plant pretreatment structure through a 12-inch diameter force main. The pretreatment unit removes large solids by screening and removes grit.

Leaving the pretreatment structure, the wastewater enters the raw wet well in the pump station, where it is pumped through a 12-inch diameter force main to the equalization basin.

The equalization basin acts as a surge basin allowing for the hydraulic equalization of influent resulting from diurnal flow variations, and infiltration/inflow surges. Diffused air is introduced into the wastewater retained in the basin to prevent septic conditions.

Through various piping and valve arrangements the influent flow to the biological treatment system can be supplied at a constant rate by the flow meter and control valves. Once the desired constant flow rate is set, the flow is diverted evenly into two process trains by the flow splitter box. After the flow is divided, each process flow enters its respective aeration basin for biological treatment, intermediate clarifier for solids removal, flash mix and flocculation basins for chemical coagulation, and the final clarifier for additional solids removal. After leaving the final clarifiers, the process flows are rejoined.

In the aeration basins, wastewater undergoes the extended aeration activated sludge process, where air is diffused into each compartment within the basin, to provide a complete mix of waste. Each process train consists of 15 compartments with a detention time of 1.6 hours, providing a total detention time of 24 hours. This process accomplishes the reduction of carbonaceous BOD and the biological nitrification of the TKN.

After biological treatment, the waste flow enters intermediate clarifiers where the mixed liquor floc settles out within the four to six hour detention time. A portion of the clarifier underflow is returned to the aeration basin in order to maintain the mixed liquor concentration and sludge age necessary for biological nitrification. The remaining portion of the sludge is wasted to the aerobic digester. The control of sludge return/wasting is achieved through the proper operation of the intermediate site well.

After clarification, the waste stream undergoes chemical coagulation in the flash mixers and flocculators. Flocculator effluent enters the final clarifiers which polish the effluent. Final clarifier effluent will attain the permit limit of 20 mg/l suspended solids concentration and the TKN permit limit concentration of 3 mg/l by chemically removing any insoluble organic nitrogen that may have escaped biological treatment. A portion of the sludge from the final clarifier may be returned to the aeration basin for maintaining the mixed liquor concentration, and the remaining sludge is wasted to the aerobic digester. The control of sludge movement is done by proper operation of the final site well.

After the final clarification, effluent from the two processes trains are rejoined for chlorination. After the proper disinfection is achieved by maintaining a minimum of 1 mg/l chlorine residual, the flow is dechlorinated by the addition of sulfur dioxide. This is done to achieve the nondetectable chlorine residual limits set in the discharge permit. Once dechlorination is complete, the water is reaerated to reach a minimum dissolved oxygen concentration of 5 mg/l required in the discharge permit. After aeration, the final effluent is released into the receiving waters.

The wasted sludge is sent to the digester where it is aerobically digested by the introduction of diffused air into the basin. Digested sludge is transferred to vacuum assisted sludge dewatering beds for dewatering. Dewatered sludge is mechanically removed from the beds, and along with the grit and debris from the pretreatment process, is hauled to a sanitary landfill. Filtrate from the vacuum dewatering beds is returned to the pump station raw wet well.

3.3 OPERATION AND CONTROL

This section describes the operation and control requirements for the Black Swamp Wastewater Treatment Plant. It features control, analysis, feedback, and response procedures. As the operator becomes familiar with the Engineers' intentions for operation of the equipment and unit processes, the operator will be better prepared to operate the plant in an efficient manner.

Each section contains discussions on the operation of a particular process and the pieces of equipment involved. Each section is divided into subsections that discuss the following items:

- Process Discussion
- Process Description
- Relationship to Adjacent Units
- Classification
- Methods of Control
- Common Operating Problems
- Laboratory Controls
- Start-up
- Normal Operation
- Alternative Operation
- Emergency Operation.

WASTEWATER TREATMENT PROCESS FACILITIES

1. **Pump Station**

   - Wet well as transfer reservoir only
   - 3 pumps with 1,500 gpm capacity with largest single unit out of service
   - Provision for inclusion of 2 future pumps

2. **Pretreatment Structure**

   - 3 flow channels
   - 2 manual bar screens
   - 1 mechanical bar screen
   - Aerated grit chambers
   - Chain and Bucket type grit removal

3. **Equalization Basin**

   - Two compartments equal in capacity
   - 10 hours or 250,000 gallon total effective capacity
   - Capable of either in-line or side-line operation
   - Aerobic or anaerobic operation

4. **Aeration Basins**

   - 2 Basins, each with a capacity for 24 hour detention time based on 300,000 GPD
   - Aeration system to maintain dissolved oxygen concentrations of 2 mg/l at average design load and 1.0 mg/l at peak load
   - Each basin composed of 12-two hour (31,250 gallons) completely mixed compartments in series to attain plug flow conditions

5. **Intermediate Sedimentation Basins (Biological Settling)**

   - 2 basins, each with surface settling rate not to exceed 600 gpd per square foot and a minimum detention time of 6.0 hours based on 300,000 gpd
   - Adjustable overflow weirs with loading rate not greater than 7,500 gpd per linear foot

6. **Flash Mix Basins**

   - 4 basins, 2 per flow train
   - Detention time not less than 1 minute per flow path
   - 4 variable speed mechanical mixers, 2 per flow train, 1 per basin, each capable of producing a minimum intensity in accordance with the regulations

7. **Flocculation Basins**

- 2 basins, each with capacity for minimum 30 minute detention time
- 4 variable speed mechanical mixers, 2 per basin to allow for tapered flocculation, each capable of producing a minimum mixing intensity in accordance with the regulations

8. **Final Sedimentation Basins (Chemical Clarifications)**

- 2 basins, each with capacity for minimum 6 hour detention time based on 300,000 gpd
- Surface settling rate not to exceed 400 gpd per square foot
- Adjustable overflow weirs with loading rate not greater than 10,000 gpd per linear foot

9. **Chlorine Contact Tank**

- 2 chambers, each with capacity for minimum 30 minute detention time at 300,000 gpd
- Baffling to attain a minimum length to width ratio of 27 to prevent short circuiting

10. **Dechlorination**

- Dechlorination using Sulfur-Dioxide Gas
- In line mixing with the use of a static mixer

11. **Post Aeration**

- 1 post aeration cascade to provide required minimum dissolved oxygen concentration of 6.5 mg/l in effluent
- Number and height of steps as required

12. **Aerobic Digestion**

- 2 units capable of parallel or series operation
- Detention time (hydraulic) not less than 15 days
- Aeration capacity to allow a minimum dissolved oxygen concentration of 2 mg/l and allow a minimum of 20 SCFM of air per 1,000 cubic feet of total tank volume

13. **Sludge Dewatering**

- Covered Sludge Drying Beds with Vacuum Assistance
- Loaded at an average annual rate of 375 pounds of dried solids per square foot

Sewage Sludge Process

Waste sludge is pumped from the primary and secondary clarifier to the two aerobic digesters. After digestion the sludge's is drained via gravity to the sludge processing building. At which point it is transferred via pump to either a centrifuge for dewatering or a vacuum drying bed. The centrifuge is the primary method of dewatering sludge and the vacuum drying bed is an alternative redundant back-up system as required by the health Department.

Under normal operation the sludge is dewatered by the centrifuge and transferred via screw conveyor to a dump truck or roll off container. The dried sludge is then hauled via truck to the local landfill (Atlantic Waste) on Route 626 and Route 602 in Sussex County.

Driving directions:

Leaving the Black Swamp Treatment Facility turn right (west) on Route 626 (Beef Steak Road) continue 1 and 1/8 mile to Route 602. Turn left (south) on Route 602 (Cabin Point Road) and continue 1.2 miles, to the Atlantic Waste landfill site. Turn left (east) at the main entrance.

Should the centrifuge be out of service for repairs the sludge would be transferred to the vacuum drying bed and dewatered. The dried material would be lifted off the bed by a small front end loader and placed in a dump truck or roll off container for ultimate disposal at the same landfill. The disposal rout would be the same as listed for the centrifuge.

CHEMICAL FEED FACILITIES

CHEMICAL	NUMBER OF FEEDERS	MIN. CAPACITY	MAX. CAPACITY	POINTS OF APPLICATION
ACID (pH CONTROL)	1 1/2	0.1 GPH	1.0 GPH	1, 3, 4, & 6
ALUM (PRECIPITATION)	2	0.5 GPH	10.0 GPH	5, 6 & 7
CAUSTIC SODA (pH CONTROL)	1 1/2	1.0 GPH	12.0 GPH	1, 3, 4, 10 & 11
CHLORINE (DISINFECTION)				
PROCESS	2	10 PPD	400 PPD	8
MISCELLANEOUS	1	10 PPD	400 PPD	2, 9 & 13
SULFUR DIOXIDE (DECHLORINATION)	2	3 PPD	400 PPD	11
METHANOL (CARBON SOURCE)	1	1.0 GPH	15 GPH	3 & 4
POLYMER (PRECIPITATION)	2	10 GPH	350 GPH	5, 6, 7 & 12

POINTS OF APPLICATION

1 PUMP STATION
2 GRIT CHAMBER
3 INFLUENT LINE TO AERATION BASINS
4 ANOXIC ZONE OF AERATION BASINS (FUTURE UCT OPERATION)
5 LINE PRIOR TO INTERMEDIATE CLARIFICATION
6 FLASH MIX PRIOR TO FLOCCULATORS
7 FLOCCULATION
8 LINE PRIOR TO CHLORINE CONTACT TANK
9 SLUDGE RETURN LINES
10 LINE PRIOR TO AEROBIC DIGESTER
11 LINE PRIOR TO DECHLORINATION MIXER
12 LINE PRIOR TO SLUDGE DRYING BEDS
13 LINE PRIOR TO FUTURE SAND FILTERS

Attachment C

Topographic Map:

Sussex Quadrangle
Latitude: 37º 03’ 14.2”, Longitude: -77º 08’ 23.5”

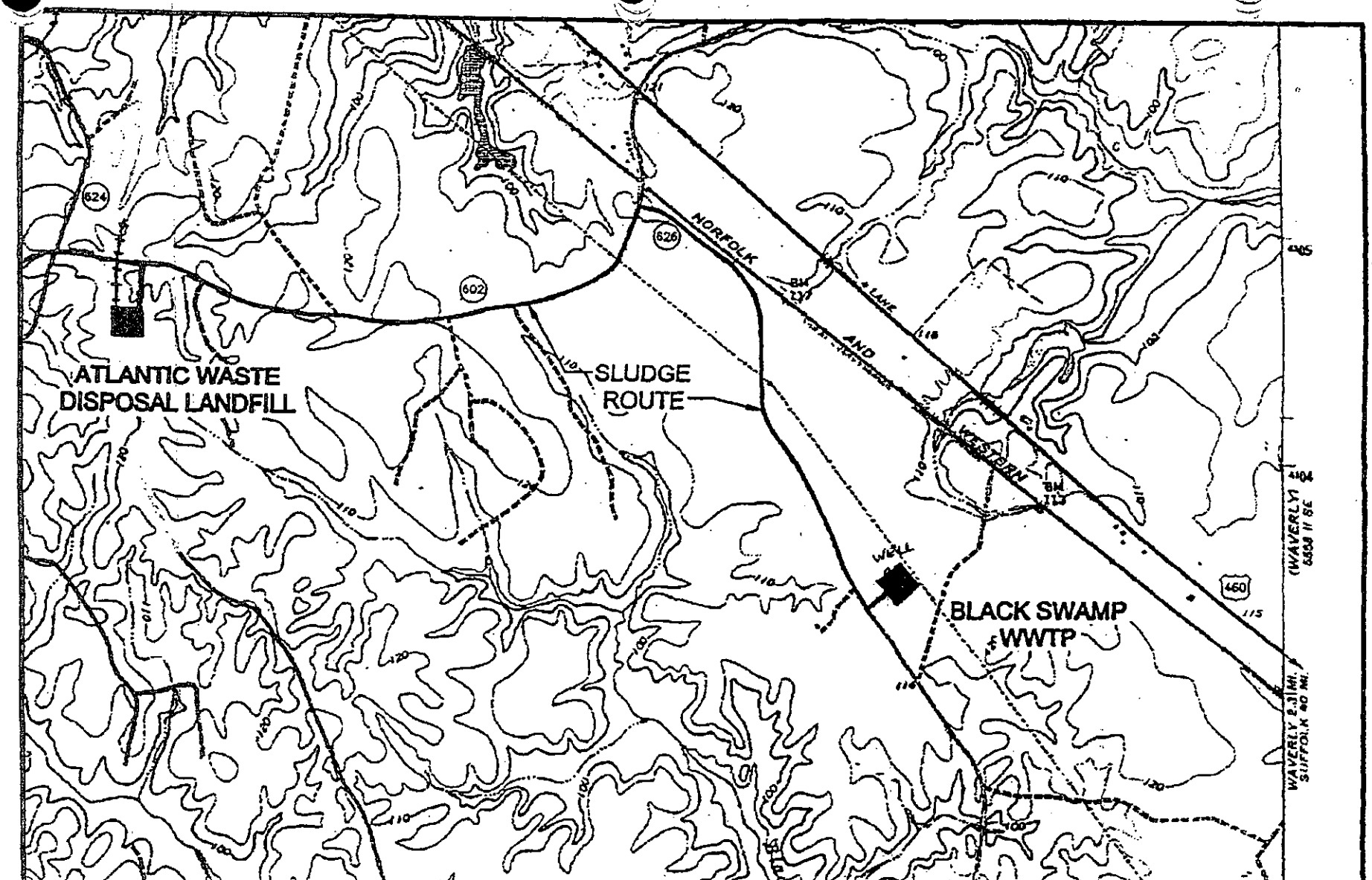

SUSSEX SERVICE AUTHORITY
BLACK SWAMP WASTEWATER TREATMENT PLANT

SLUDGE TRANSPORT ROUTE

APPROX. SCALE 1" = 2000'

MN
8°
142 MILS

FILE: 94110SMP\STRT 3-4-98 1=2000
VIEW: PLOT IH
PCP: Hp750cpl

DIACK Swamp WW II

VA 00889 18

LOCATION MAP
Black Swamp WWTF

Attachment D

Site Inspection Report

(July 7, 2011)

MEMORANDUM

DEPARTMENT OF ENVIRONMENTAL QUALITY
Piedmont Regional Office

4949-A Cox Road **Glen Allen, VA 23060** **804/527-5020**

SUBJECT: Black Swamp WWTF, VA0088978 Site Visit

TO: File

FROM: Emilee Carpenter – PRO

DATE: July 7, 2011

COPIES: File

I performed an announced site visit at the Black Swamp WWTF on July 6, 2011. Chris Jackson and Chuck Bahatec, plant operators and Mike Kearns, the environmental coordinator led me on a tour of the facility around 3:00 pm. I will be reissuing the VPDES permit for this facility in 2011 and the visit was intended to ensure that the permit is consistent with actual conditions of the receiving stream and the facility installed. It was also intended to provide a visual assessment of the discharge's impact on the receiving stream.

This facility currently receives influent from residential sources and the Sussex Prisons. Potential future acceptance of treated leachate from Atlantic Waste Landfill is also being discussed. The Black Swamp facility is interconnected with Spring Branch. Black Swamp receives approximately 75,000 gallons of influent from Spring Branch every day.

The headworks of the facility is equipped with a mechanical screen, grit removal chamber and back up bar screen. At the time of my visit, the operators were bypassing both the mechanical screen and the grit chamber and employing only the backup bar screen. The operators indicated that the bypass had been ongoing for approximately 2 months. According to Mr. Kearns the grease received from the prisons impedes the mechanical operation of both the screen and grit chamber, so the operators took them offline. From the headworks the wastewater flows to two equalization basins. Raw waste is then split in to two process trains for extended aeration activated sludge treatment. It then flows through intermediate and secondary clarifiers prior to disinfection. The clarifiers are divided by dormant chemical addition compartments with flash mix and flocculation chambers. Vegetation was observed in the EQ basin, activated sludge basins, and both clarifiers. Chlorine gas is fed prior to the chlorine contact tank and sulfur dioxide gas is fed prior to the post aeration chamber. Effluent samples are collected following post aeration, but the outfall is ~0.5 mile south east, directly west of Route 626.

The discharge is to an unnamed tributary of Black Swamp. The outfall was discharging at the time of my visit and there was no visual indication of adverse impact on the receiving stream.

Wasted sludge is aerobically digested for approximately 1-1.5 weeks before drying in a centrifuge. Dried sludge is sent to Atlantic Waste Landfill for disposal. The facility has back up drying beds in place for use when the centrifuge is in need of maintenance.

The chemicals used on site, including chlorine gas and sulfur dioxide gas are stored inside a ventilated room with alarm sensors. Polymer is stored undercover in the sludge processing area. There was a collection of empty totes and drums outdoors without cover. Although the containers were emptied of chemical, chemical residues could remain. There is a shed within 20 feet of the current storage area under which the containers could be stored prior to shipment offsite.

Overall, the plant appears to be operating well; however there are two items that I requested the SSA to address:

1) Prison Grease: As noted above, grease from the prison influent is causing operational difficulties at the Black Swamp Facility. Coordination with the prison to establish a FOG training plan for the cafeteria staff and a schedule for servicing grease traps is needed.

2) Chemical Storage: totes and drums should be stored under the shed to prevent exposure of chemical residues to storm water.

Attachment E

Effluent Data:

DMR Data
Application Data

Facility Name: Black Swamp Regional WWTF
Permit No:VA0090786
Outfall Number: 001

DMR data

Due Date	FLOW (MGD)		PH (s.u.)		TSS (mg/L)		DO (mg/L)	TKN (mg/L)		cBOD5 (mg/L)		TR Copper (ug/L)		TR Zinc (ug/L)		Ammonia (mg/L)		Hardness (mg/L as CaCO3)	Nitrate Nitrogen (mg/L)
	Monthly Average	Max	Min	Max	Monthly Average	Max	Min	Monthly Average	Max	Monthly Average	Max	Monthly Average	Max	Monthly Average	Max	Monthly Average	Max	Max	Max
10-Aug-08	0.341	0.394	6.69	7.58	6	6	7.82	2.44	4.12	<QL	<QL	12	12	45	45	<QL	<QL	NULL	57.8
10-Sep-08	0.375	0.506	6.58	7.39	5	5	7.92	2.31	4.21	<QL	<QL	10	10	39	39	1.24	1.24	NULL	NULL
10-Oct-08	0.388	0.4908	6.02	7.75	3.7	3.7	8.01	1.26	1.92	<QL	<QL	15	15	43	43	<QL	<QL	NULL	NULL
10-Nov-08	0.333	0.429	6.5	7.5	7.4	7.4	8.37	2.3	4.23	<QL	<QL	12	12	34	34	<QL	<QL	NULL	NULL
10-Dec-08	0.28	0.319	6.05	8.81	6.3	6.3	9.92	2.92	4.22	<QL	<QL	20	20	96	96	0.26	0.26	NULL	NULL
10-Jan-09	0.281	0.361	6.84	8.06	7.3	7.3	10.36	3.33	9.28	<QL	<QL	10	10	48	48	0.75	0.75	NULL	110
10-Feb-09	0.297	0.345	7.14	7.73	11	11	10.99	1.35	3.33	<QL	<QL	7	7	41	41	1.93	1.93	288	78.5
10-Mar-09	0.291	0.334	7.19	7.54	16	16	10.78	5.33	6.03	<QL	<QL	14	14	63	63	4.44	4.44	NULL	NULL
10-Apr-09	0.317	0.373	7.32	7.69	7	7	10.62	7.23	7.85	<QL	<QL	18	18	53	53	<QL	<QL	NULL	NULL
10-May-09	0.298	0.375	7.66	7.98	6	6	9.58	5.91	6.93	<QL	<QL	11	11	42	42	<QL	<QL	NULL	29.00
10-Jun-09	0.264	0.349	7.38	7.93	5	5	8.4	0.63	1.57	<QL	<QL	19	19	23	23	<QL	<QL	NULL	NULL
10-Jul-09	0.229	0.289	7.11	7.78	5	5	8.47	0.05	0	<QL	<QL	4	4	26	26	<QL	<QL	NULL	NULL
10-Aug-09	0.164	0.195	7.4	8.02	4.9	4.9	7.63	0.18	0.61	<QL	<QL	3	3	17	17	<QL	<QL	NULL	1.59
10-Sep-09	0.193	0.2809	7.16	7.84	8.4	8.4	7.3	<QL	<QL	<QL	<QL	5	5	27	27	<QL	<QL	NULL	NULL
10-Oct-09	0.164	0.2106	7.43	7.8	3.1	3.1	8.07	<QL	<QL	<QL	<QL	5	5	25	25	<QL	<QL	NULL	NULL
10-Nov-09	0.151	0.216	6.92	7.55	3.8	3.8	7.35	<QL	<QL	<QL	<QL	4	4	32	32	<QL	<QL	NULL	16.40
10-Dec-09	0.168	0.267	6.89	7.48	6	6	8.02	<QL	<QL	1.46	6.33	8	8	55	55	<QL	<QL	NULL	NULL
10-Jan-10	0.172	0.241	6.92	7.43	4.1	4.1	10.79	0.7	0.76	<QL	<QL	4	4	43	43	0.1	0.1	NULL	NULL
10-Feb-10	0.187	0.327	6.5	7.69	2.4	2.4	11.6	2.78	9.8	<QL	<QL	5	5	73	73	<QL	<QL	137	21.4
10-Mar-10	0.212	0.329	6.75	7.7	5.7	5.7	12.26	1.24	2.39	<QL	<QL	6	6	79	79	<QL	<QL	NULL	NULL
10-Apr-10	0.226	0.321	7.18	7.6	1.1	1.1	10.77	0.6	1.04	0.38	1.67	2	2	38	38	0.42	0.42	NULL	NULL
10-May-10	0.2005	0.284	7.25	7.78	4.4	4.4	9.68	0.71	1	<QL	<QL	6	6	62	62	<QL	<QL	NULL	4.44
10-Jun-10	0.1805	0.243	7.48	8	1.9	1.9	8.23	0.04	0	<QL	<QL	5	5	53	53	<QL	<QL	NULL	NULL
10-Jul-10	0.168	0.226	7.4	8.27	4.7	4.7	7.75	0.38	0.65	<QL	<QL	6	6	40	40	<QL	<QL	NULL	NULL
10-Aug-10	0.159	0.212	7.05	8.02	3.3	3.3	7.74	0.09	0.4	<QL	<QL	13	13	56	56	<QL	<QL	NULL	NULL
10-Sep-10	0.154	0.208	7.6	8.01	2.3	2.3	7.61	<QL	<QL	<QL	<QL	12	12	58	58	<QL	<QL	NULL	NULL
10-Oct-10	0.133	0.328	7.13	7.95	3	3	8.18	0.05	0	<QL	<QL	11	11	71	71	<QL	<QL	NULL	NULL
10-Nov-10	0.167	0.343	7.6	8.09	2.6	2.6	9.47	1.43	4.86	<QL	<QL	6	6	63	63	<QL	<QL	NULL	7
10-Dec-10	0.146	0.171	6.91	7.75	1.6	1.6	9.93	0.15	0.34	<QL	<QL	12	12	126	126	<QL	<QL	NULL	NULL
10-Jan-11	0.165	0.2307	6.88	7.4	2.6	2.6	11.2	0.77	1.85	<QL	<QL	9	9	92	92	<QL	<QL	NULL	NULL
10-Feb-11	0.1806	0.237	7.07	7.56	5.5	5.5	12.25	4.05	8.94	4.92	13.33	7	7	70	70	<QL	<QL	136	17.8
10-Mar-11	0.1933	0.3639	7.01	7.9	6.8	6.8	11.55	1.96	2.08	3.83	5	7	7	65	65	0.44	0.44	NULL	NULL
10-Apr-11	0.2022	0.3456	7.03	7.32	4.5	4.5	11.25	1.41	1.65	<QL	<QL	12	12	76	76	<QL	<QL	NULL	NULL
10-May-11	0.1964	0.2843	7.06	7.5	3.3	3.3	8.89	2.07	4.63	3.25	13	15	15	99	99	<QL	<QL	NULL	13.80
10-Jun-11	0.1896	0.2649	7.29	7.63	9.8	9.8	8.81	0.84	1.16	0.36	<QL	13	13	100	100	<QL	<QL	NULL	NULL
10-Jul-11	0.1964	0.25	7.45	7.82	11	11	7.95	0.96	1.05	<QL	<QL	12	12	89	89	<QL	<QL	NULL	NULL
10-Aug-11	0.2141	0.3388	7.41	7.76	15	15	7.61	1.13	1.61	0.77	1.67	18	18	98	98	<QL	<QL	NULL	14.3
Max	**0.388**	**0.506**	**7.66**	**8.81**	**16**	**16**	**12.26**	**7.23**	**9.8**	**4.92**	**13.33**	**20**	**20**	**126**	**126**	**4.44**	**4.44**	**288**	**17.8**
Average	**0.224**	**0.305**	**7.061**	**7.773**	**5.608**	**5.608**	**9.274**	**1.769**	**3.078**	**2.139**	**6.833**	**9.676**	**9.676**	**58.378**	**58.378**	**1.198**	**1.198**	**187.000**	**17.800**
90th %tile	**0.3314**	**0.3826**	**7.462**	**8.036**	**10.28**	**10.28**	**11.37**	**3.978**	**7.758**	**4.266**	**13.165**	**16.2**	**16.2**	**96.8**	**96.8**	**2.683**	**2.683**	**257.8**	**17.8**
10th %tile	**0.1545**	**0.21144**	**6.548**	**7.46**	**2.36**	**2.36**	**7.622**	**0.096**	**0.346**	**0.372**	**1.67**	**4**	**4**	**26.6**	**26.6**	**0.212**	**0.212**	**136.2**	**17.8**

Blue Highlight = Values used in MSTRANTI

Application Data:
EPA Form 2A, A.12 & B.6

Value		
Parameter	**Max Daily**	**Average Daily**
Flow	0.23 MGD	0.1844 MGD
BOD5	8.0 mg/L	4.0 mg/L
cBOD5	2.0 mg/L	2.0 mg/L
TKN	0.82 mg/L	<0.50 mg/L
Nitrate + Nitrite	25.4/0.032 mg/L	20.2/0.015 mg/L
Dissolved Oxygen	13.10 mg/L	11.60 mg/L
TSS	4.7 mg/L	3.23 mg/L
Ammonia	<0.20 mg/L	<0.20 mg/L
Temperature (Winter)	18.6 °C	12.8 °C
Temperature (Summer)	26.7 °C	25.9 °C
pH (Min)	7.18 s.u.	
pH (Max)	8.19 s.u.	
TRC	<0.10 mg/L	<0.10 mg/L
Oil and Grease	<5.0 mg/L	<5.0 mg/L
Total Dissolved Solids	588 mg/L	586 mg/L
Total Phosphorus	4.59 mg/L	4.46 mg/L
Fecal Coliform	110 MPN/100mL	74 MPN/100mL

Date	Temp (°C)
6/8/2010	24.3
7/13/2010	26.6
8/1/2010	26.7
11/1/2010	18.6
12/7/2010	11.4
1/15/2011	8.3
Average	**19.3**
90th %tile	**26.7**
10th %tile	**9.9**

Report	Hardness
DMR 01/10	137
DMR 01/11	136
Attachment A	141
Mean	**138**

Blue Highlight = Values used in MSTRANTI

ATTACHMENT A
DEPARTMENT OF ENVIRONMENTAL QUALITY
WATER QUALITY CRITERIA MONITORING

CASRN#	CHEMICAL	EPA ANALYSIS NO.	QUANTIFICATION LEVEL [1]	REPORTING RESULTS	SAMPLE TYPE[2]	SAMPLE FREQUENCY
METALS						
7440-36-0	Antimony, dissolved	(3)	1.4	<1	G or C	1/5 YR
7440-38-2	Arsenic, dissolved	(3)	1.0	<1	G or C	1/5 YR
7440-43-9	Cadmium, dissolved	(3)	0.30	<0.2	G or C	1/5 YR
16065-83-1	Chromium III, dissolved [8]	(3)	3.6	<3	G or C	1/5 YR
18540-29-9	Chromium VI, dissolved [8]	(3)	1.6	<3	G or C	1/5 YR
7440-50-8	Copper, dissolved	(3)	0.50	4.7	G or C	1/5 YR
7439-92-1	Lead, dissolved	(3)	0.50	<0.5	G or C	1/5 YR
7439-97-6	Mercury, dissolved	(3)	1.0	<0.2	G or C	1/5 YR
7440-02-0	Nickel, dissolved	(3)	0.94	2.4	G or C	1/5 YR
7782-49-2	Selenium, Total Recoverable	(3)	2.0	2.0	G or C	1/5 YR
7440-22-4	Silver, dissolved	(3)	0.20	<0.2	G or C	1/5 YR
7440-28-0	Thallium, dissolved	(4)	(5)	<5	G or C	1/5 YR
7440-66-6	Zinc, dissolved	(3)	3.6	78	G or C	1/5 YR
PESTICIDES/PCB'S						
309-00-2	Aldrin	608	0.05	<0.05	G or C	1/5 YR
57-74-9	Chlordane	608	0.2	<0.2	G or C	1/5 YR
2921-88-2	Chlorpyrifos (synonym = Dursban)	(4)	(5)	<0.2	G or C	1/5 YR
72-54-8	DDD	608	0.1	<0.05	G or C	1/5 YR
72-55-9	DDE	608	0.1	<0.05	G or C	1/5 YR
50-29-3	DDT	608	0.1	<0.05	G or C	1/5 YR
8065-48-3	Demeton	(4)	(5)	<1	G or C	1/5 YR
333-41-5	Diazinon	(4)	(5)	<1	G or C	1/5 YR
60-57-1	Dieldrin	608	0.1	<0.05	G or C	1/5 YR
959-98-8	Alpha-Endosulfan	608	0.1	<0.05	G or C	1/5 YR
33213-65-9	Beta-Endosulfan	608	0.1	<0.05	G or C	1/5 YR

CASRN#	CHEMICAL	EPA ANALYSIS NO.	QUANTIFICATION LEVEL (1)	REPORTING RESULTS	SAMPLE TYPE(2)	SAMPLE FREQUENCY
1031-07-8	Endosulfan Sulfate	608	0.1	<0.05	G or C	1/5 YR
72-20-8	Endrin	608	0.1	<0.05	G or C	1/5 YR
7421-93-4	Endrin Aldehyde	(4)	(5)	<0.05	G or C	1/5 YR
86-50-0	Guthion	(4)	(5)	<1	G or C	1/5 YR
76-44-8	Heptachlor	608	0.05	<0.05	G or C	1/5 YR
1024-57-3	Heptachlor Epoxide	(4)	(5)	<0.05	G or C	1/5 YR
319-84-6	Hexachlorocyclohexane Alpha-BHC	608	(5)	<0.05	G or C	1/5 YR
319-85-7	Hexachlorocyclohexane Beta-BHC	608	(5)	<0.05	G or C	1/5 YR
58-89-9	Hexachlorocyclohexane Gamma-BHC or Lindane	608	(5)	<0.05	G or C	1/5 YR
143-50-0	Kepone	(9)	(5)	<5	G or C	1/5 YR
121-75-5	Malathion	(4)	(5)	<1	G or C	1/5 YR
72-43-5	Methoxychlor	(4)	(5)	<0.05	G or C	1/5 YR
2385-85-5	Mirex	(4)	(5)	<0.05	G or C	1/5 YR
56-38-2	Parathion	(4)	(5)	<1	G or C	1/5 YR
1336-36-3	PCB Total	608	7.0	<0.5	G or C	1/5 YR
8001-35-2	Toxaphene	608	5.0	<0.5	G or C	1/5 YR
BASE NEUTRAL EXTRACTABLES						
83-32-9	Acenaphthene	625	10.0	<5	G or C	1/5 YR
120-12-7	Anthracene	625	10.0	<5	G or C	1/5 YR
92-87-5	Benzidine	(4)	(5)	<5	G or C	1/5 YR
56-55-3	Benzo (a) anthracene	625	10.0	<5	G or C	1/5 YR
205-99-2	Benzo (b) fluoranthene	625	10.0	<5	G or C	1/5 YR
207-08-9	Benzo (k) fluoranthene	625	10.0	<5	G or C	1/5 YR
50-32-8	Benzo (a) pyrene	625	10.0	<5	G or C	1/5 YR
111-44-4	Bis 2-Chloroethyl Ether	(4)	(5)	<5	G or C	1/5 YR
108-60-1	Bis 2-Chloroisopropyl Ether	(4)	(5)	<5	G or C	1/5 YR
85-68-7	Butyl benzyl phthalate	625	10.0	<5	G or C	1/5 YR
91-58-7	2-Chloronaphthalene	(4)	(5)	<5	G or C	1/5 YR
218-01-9	Chrysene	625	10.0	<5	G or C	1/5 YR

CASRN#	CHEMICAL	EPA ANALYSIS NO.	QUANTIFICATION LEVEL [1]	REPORTING RESULTS	SAMPLE TYPE[2]	SAMPLE FREQUENCY
53-70-3	Dibenz(a,h)anthracene	625	20.0	<5	G or C	1/5 YR
84-74-2	Dibutyl phthalate (synonym = Di-n-Butyl Phthalate)	625	10.0	<5	G or C	1/5 YR
95-50-1	1,2-Dichlorobenzene	624	10.0	<5	G or C	1/5 YR
541-73-1	1,3-Dichlorobenzene	624	10.0	<5	G or C	1/5 YR
106-46-7	1,4-Dichlorobenzene	624	10.0	<5	G or C	1/5 YR
91-94-1	3,3-Dichlorobenzidine	(4)	(5)	<5	G or C	1/5 YR
84-66-2	Diethyl phthalate	625	10.0	<5	G or C	1/5 YR
117-81-7	Bis-2-ethylhexyl phthalate	625	10.0	<5	G or C	1/5 YR
131-11-3	Dimethyl phthalate	(4)	(5)	<5	G or C	1/5 YR
121-14-2	2,4-Dinitrotoluene	625	10.0	<5	G or C	1/5 YR
122-66-7	1,2-Diphenylhydrazine	(4)	(5)	<5	G or C	1/5 YR
206-44-0	Fluoranthene	625	10.0	<5	G or C	1/5 YR
86-73-7	Fluorene	625	10.0	<5	G or C	1/5 YR
118-74-1	Hexachlorobenzene	(4)	(5)	<5	G or C	1/5 YR
87-68-3	Hexachlorobutadiene	(4)	(5)	<5	G or C	1/5 YR
77-47-4	Hexachlorocyclopentadiene	(4)	(5)	<5	G or C	1/5 YR
67-72-1	Hexachloroethane	(4)	(5)	<5	G or C	1/5 YR
193-39-5	Indeno(1,2,3-cd)pyrene	625	20.0	<5	G or C	1/5 YR
78-59-1	Isophorone	625	10.0	<5	G or C	1/5 YR
98-95-3	Nitrobenzene	625	10.0	<5	G or C	1/5 YR
62-75-9	N-Nitrosodimethylamine	(4)	(5)	<5	G or C	1/5 YR
621-64-7	N-Nitrosodi-n-propylamine	(4)	(5)	<5	G or C	1/5 YR
86-30-6	N-Nitrosodiphenylamine	(4)	(5)	<5	G or C	1/5 YR
129-00-0	Pyrene	625	10.0	<5	G or C	1/5 YR
120-82-1	1,2,4-Trichlorobenzene	625	10.0	<5	G or C	1/5 YR
VOLATILES						
107-02-8	Acrolein	(4)	(5)	<50	G	1/5 YR
107-13-1	Acrylonitrile	(4)	(5)	<50	G	1/5 YR
71-43-2	Benzene	624	10.0	<5	G	1/5 YR

[Type text]

CASRN#	CHEMICAL	EPA ANALYSIS NO.	QUANTIFICATION LEVEL (1)	REPORTING RESULTS	SAMPLE TYPE(2)	SAMPLE FREQUENCY
75-25-2	Bromoform	624	10.0	<5	G	1/5 YR
56-23-5	Carbon Tetrachloride	624	10.0	<5	G	1/5 YR
108-90-7	Chlorobenzene (synonym = monochlorobenzene)	624	50.0	<5	G	1/5 YR
124-48-1	Chlorodibromomethane	624	10.0	<5	G	1/5 YR
67-66-3	Chloroform	624	10.0	13	G	1/5 YR
75-09-2	Dichloromethane (synonym = methylene chloride)	624	20.0	<5	G	1/5 YR
75-27-4	Dichlorobromomethane	624	10.0	<5	G	1/5 YR
107-06-2	1,2-Dichloroethane	624	10.0	<5	G	1/5 YR
75-35-4	1,1-Dichloroethylene	624	10.0	<5	G	1/5 YR
156-60-5	1,2-trans-dichloroethylene	(4)	(5)	<5	G	1/5 YR
78-87-5	1,2-Dichloropropane	(4)	(5)	<5	G	1/5 YR
542-75-6	1,3-Dichloropropene	(4)	(5)	<5	G	1/5 YR
100-41-4	Ethylbenzene	624	10.0	<5	G	1/5 YR
74-83-9	Methyl Bromide	(4)	(5)	<10	G	1/5 YR
79-34-5	1,1,2,2-Tetrachloroethane	(4)	(5)	<5	G	1/5 YR
127-18-4	Tetrachloroethylene	624	10.0	<5	G	1/5 YR
10-88-3	Toluene	624	10.0	<5	G	1/5 YR
79-00-5	1,1,2-Trichloroethane	(4)	(5)	<5	G	1/5 YR
79-01-6	Trichloroethylene	624	10.0	<5	G	1/5 YR
75-01-4	Vinyl Chloride	624	10.0	<10	G	1/5 YR
ACID EXTRACTABLES (6)						
95-57-8	2-Chlorophenol	625	10.0	<5	G or C	1/5 YR
120-83-2	2,4 Dichlorophenol	625	10.0	<5	G or C	1/5 YR
105-67-9	2,4 Dimethylphenol	625	10.0	<5	G or C	1/5 YR
51-28-5	2,4-Dinitrophenol	(4)	(5)	<20	G or C	1/5 YR
534-52-1	2-Methyl-4,6-Dinitrophenol	(4)	(5)	<5	G or C	1/5 YR
25154-52-3	Nonylphenol	(5)	(5)	<5	G or C	1/5 YR
87-86-5	Pentachlorophenol	625	50.0	<10	G or C	1/5 YR
108-95-2	Phenol	625	10.0	<5	G or C	1/5 YR

[Type text]

CASRN#	CHEMICAL	EPA ANALYSIS NO.	QUANTIFICATION LEVEL (1)	REPORTING RESULTS	SAMPLE TYPE(2)	SAMPLE FREQUENCY
88-06-2	2,4,6-Trichlorophenol	625	10.0	<5	G or C	1/5 YR
MISCELLANEOUS						
776-41-7	Ammonia as NH3-N	350.1	200	<100	C	1/5 YR
16887-00-6	Chlorides	(4)	(5)	243	C	1/5 YR
7782-50-5	Chlorine, Total Residual	(4)	100	<50	G	1/5 YR
57-12-5	Cyanide, Free	(4)	10.0	<5	G	1/5 YR
N/A	*E. coli / Enterococcus* (N/CML)	(4)	(5)	<1 MPN/100mL	G	1/5 YR
7783-06-4	Hydrogen Sulfide	(5)	(5)	110	G	1/5 YR
60-10-5	Tributyltin (7)	NBSR 85-3295	(5)	<0.03	G or C	1/5 YR
	Hardness (mg/L as $CaCO_3$)	(4)	(5)	141 mg/L	G or C (10)	1/5 YR

FOOTNOTES:

(1) Quantification level (QL) is defined as the lowest concentration used for the calibration of a measurement system when the calibration is in accordance with the procedures published for the required method.

The quantification levels indicated for the metals are actually Specific Target Values developed for this permit. The Specific Target Value is the approximate value that may initiate a wasteload allocation analysis. Target values are not wasteload allocations or effluent limitations. The Specific Target Values are subject to change based on additional information such as hardness data, receiving stream flow, and design flows.

Units for the quantification level are micrograms/liter unless otherwise specified.

Quality control and quality assurance information shall be submitted to document that the required quantification level has been attained.

(2) Sample Type

G = Grab = An individual sample collected in less than 15 minutes. Substances specified with "grab" sample type shall only be collected as grabs. The permittee may analyze multiple grabs and report the average results provided that the individual grab results are also reported. For grab metals samples, the individual samples shall be filtered and preserved immediately upon collection.

C = Composite = A 24-hour **(PW - Revise as required to require same composite duration as BOD_5)** composite unless otherwise specified. The composite shall be a combination of individual samples, taken proportional to flow, obtained at hourly or smaller time intervals. The individual samples may be of equal volume for flows that do not vary by +/- 10 percent over a 24-hour period.

(3) A specific analytical method is not specified; however a target value for each metal has been established. An appropriate method to meet the target value shall be selected from the following list of EPA methods (or any approved method presented in 40 CFR Part 136). If the test result is less than the method QL, a "<[QL]" shall be reported where the actual analytical test QL is substituted for [QL].

Metal	**Analytical Method**
Antimony	1638; 1639
Arsenic	1632
Chromium [8]	1639
Cadmium	1637; 1638; 1639; 1640
Chromium VI	1639
Copper	1638; 1640
Lead	1637; 1638; 1640
Mercury	1631
Nickel	1638; 1639; 1640
Selenium	1638; 1639
Silver	1638
Zinc	1638; 1639

(4) Any approved method presented in 40 CFR Part 136.

(5) The QL is at the discretion of the permittee. For any substances addressed in 40 CFR Part 136, the permittee shall use one of the approved methods in 40 CFR Part 136.

(6) Testing for phenols requires continuous extraction.

(7) Analytical Methods: NBSR 85-3295 or DEQ's approved analysis for Tributyltin may also be used [See A Manual for the Analysis of Butyltins in Environmental Systems by the Virginia Institute of Marine Science, dated November 1996].

(8) Both Chromium III and Chromium VI may be measured by the total chromium analysis. If the result of the total chromium analysis is less than or equal to the lesser of the Chromium III or Chromium VI method QL, the results for both Chromium III and Chromium VI can be reported as "<[QL]", where the actual analytical test QL is substituted for [QL].

(9) The lab may use SW846 Method 8270D provided the lab has an Initial Demonstration of Capability, has passed a PT for Kepone, and meets the acceptance criteria for Kepone as given in Method 8270D

(10) The sample type for Hardness (as $CaCO_3$) shall match the sample type selected for Dissolved Metals.

Attachment F

Effluent Limitation Development:

Stream Sanitation Memo (3/10/95)
Swamp and Marsh Waters Memo (3/9/87)
MSTRANTI Data Source Report
MSTRANTI
STATS.exe

Attachment E

MEMORANDUM

DEPARTMENT OF ENVIRONMENTAL QUALITY
Piedmont Regional Office

4900 Cox Road Glen Allen, VA 23060 804/527-5020

SUBJECT: Proposed Effluent Limits for Black Swamp STP

TO: Curt Linderman

FROM: D. X. Ren

DATE: March 10, 1995

Copies: Diane Osborne, Jon van Soestbergen, Mark Alling, File

A VPDES application was submitted for a new discharge (Q= 0.6 MGD) for the proposed Black Swamp STP to be located at Rt. 626 near Waverly, Sussex County. This memo proposes the effluent limits for this new discharge.

A site inspection was conducted by me on 03/2/95. Mr. Joe L. Rose, a consultant of Overman Associates, was present in the afternoon at the proposed discharge point. This site inspection revealed that upstream and downstream of the proposed discharge point are typical swamps. The receiving stream is a wet ditch which is connected by a pipe to the upstream swamp area and extends a short distance by natural channel to another swamp area. Therefore the receiving stream was determined to be a swamp. The swamp characteristics observed are irregular channel, tannic-color water, no observed velocities, and abundant vegetation in form of roots, trees, bushes and stumps.

Also, stream monitoring data provided by Mark Alling for stations near the proposed discharge supported the above site observations. A number of photographs taken at the site are attached for reference.

It is my recommendation that the swamp effluent limits apply directly to the proposed discharge point, i.e.

Q	= 0.60 MGD
$CBOD_5$	= 10.0 mg/l
TSS	= 10.0 mg/l
TKN	= 3.0 mg/l
DO	= 3.0 mg/l
Cl_2	= 0.011 mg/l

If you have any questions, please let me know.

DXR/BlackSW
Attachment

SUBJECT: Advisory Notification of Effluent Limits for Swamp and Marsh Waters

TO: L. G. Lawson

FROM: A. J. Anthony AJA

DATE: March 9, 1987

COPIES: M. A. Bellanca, W. L. Woodfin, M. D. Phillips, J. W. Gregory, Regional Directors, file

In the event that a proposal is received for discharge to a swamp or marsh that cannot be modeled and the current standards are being violated for whatever reason, OERS recommends the following effluent limits:

$CBOD_5$ =	10 mg/l
TSS =	10 mg/l
TKN =	3 mg/l
D.O. =	3 mg/l
Cl_2 =	0.011 mg/l

Our rationale for these recommendations are as follow:

We have found over the past years, through application of modeling technology to small streams, that the above limits are <u>representative</u> of effluents that are "self-sustaining"; that is: such an effluent will not normally violate the stream standard even if the stream consists of 100% effluent.

Given the fact that the areas of intended application of our recommendations are such that the stream will not possess good mixing processes and may in fact contain 100% effluent for significant distances and times render it necessary, in our opinion, that discharges be essentially of "self-sustaining" quality.

2. $CBOD_5$ -- We are recommending nitrification and consequently $CBOD^5$ is what will be measured. In addition, we believe that where both unoxidized nitrogen and hydrocarbons are limited due to considerations of stream dissolved oxygen, it is correct and reasonable to specify them separately to avoid double counting their impacts.

APPLIES TO DRY DITCHES ALSO!

3. TSS -- We are recommending that TSS be consistent with the BOD limit. This is consistent with past and current practice and should not be difficult to attain.

4 TKN -- We are recommending that unoxidized nitrogen be removed in the treatment plant. The recommended limit on TKN recognizes that a normal domestic effluent usually contains 2-3 mg/l TKN that is refractory and cannot be removed by biological treatment. For industrial discharges this may vary and may be verified by testing. The intent of our recommendation is to remove all biologically oxidizable nitrogen compounds from the effluent.

5. D.O. -- We are recommending that the dissolved oxygen in the effluent be reasonably consistent with that expected to occur in the receiving stream.

6. Cl_2 -- Mixing can be expected to be extremely poor or non-existent and the stream can be expected to contain 100% effluent for significant distances and times. In order to ensure that the chlorine standard is not violated, the discharge must meet the standard.

It is our belief that the above limits will be adequate to:

1. Protect the beneficial uses of and the aquatic life to be expected in swampy and/or marshy streams.

2. Ensure that the limits will not result in additional degradation to the receiving stream.

Provide consistency with the intent and requirements of the law.

It must be pointed out that the above limits are based on the professional opinions of OERS. They are not the result of the application of any predictive technology. The negotiations and trade-offs normally associated with the application of modeling to identify permit limits are simply not practical in this case for the following reasons:

1. There are no models available with which to evaluate various alternatives.

2. The recommended limits are based on professional opinion and are therefore not subject to negotiation.

3. The recommended limits are very stringent and essentially leave no room for trade-offs among the parameters.

As is the case with all guidance provided by OERS, the Regions should obtain concurrence from OERS prior to drafting a permit with the above limits. In addition, if the proposed discharger disagrees with the limits established, then it is our opinion that ample precedent has been established to allow the dischargers to model the system or provide other documentation that the limits as established are not correct subject to the review and approval of the Board.

Please note that toxic requirements are not covered in this memo, and should follow the normal routine for toxics-related issues.

:swamp

MSTRANTI DATA SOURCE REPORT

Black Swamp Regional WWTF
VA0088978

Stream Information	
Mean Hardness	Effluent Data is used to characterize the stream, which consists entirely of effluent in low flow design conditions.
90% Temperature (annual)	
90% Temperature (wet season)	
90% Maximum pH	
10% Maximum pH	
Tier Designation	Flow Frequency Memo
Stream Flows	
All Data	Flow Frequency Memo: Intermittent streams have zero flow in design conditions.
Mixing Information	
All Data	100% mix is assumed because there is zero receiving stream flow with which to mix.
Effluent Information	
Mean Hardness	Application and DMR data
90% Temperature (annual)	Calculated from Application Data
90% Temperature (wet season)	NA
90% Maximum pH	DMR data
10% Maximum pH	DMR data
Discharge Flow	Design Flow

Data Location:

Flow Frequency Memo - Attachment A
DMR Data – Attachment E
App Data – Attachment E

FRESHWATER
WATER QUALITY CRITERIA / WASTELOAD ALLOCATION ANALYSIS

Facility Name: Black Swamp Regional WWTF Permit No.: VA0088978

Receiving Stream: UT to Black Swamp Version: OWP Guidance Memo 00-2011 (8/24/00)

Stream Information		
Mean Hardness (as CaCO3) =	138	mg/L
90% Temperature (Annual) =	26.7	deg C
90% Temperature (Wet season) =	NA	deg C
90% Maximum pH =	8.04	SU
10% Maximum pH =	7.46	SU
Tier Designation (1 or 2) =	1	
Public Water Supply (PWS) Y/N? =	n	
Trout Present Y/N? =	n	
Early Life Stages Present Y/N? =	y	

Stream Flows		
1Q10 (Annual) =	0	MGD
7Q10 (Annual) =	0	MGD
30Q10 (Annual) =	0	MGD
1Q10 (Wet season) =	0	MGD
30Q10 (Wet season)	0	MGD
30Q5 =	0	MGD
Harmonic Mean =	0	MGD

Mixing Information		
Annual - 1Q10 Mix =	100	%
- 7Q10 Mix =	100	%
- 30Q10 Mix =	100	%
Wet Season - 1Q10 Mix =	100	%
- 30Q10 Mix =	100	%

Effluent Information		
Mean Hardness (as CaCO3) =	138	mg/L
90% Temp (Annual) =	26.7	deg C
90% Temp (Wet season) =	NA	deg C
90% Maximum pH =	8.04	SU
10% Maximum pH =	7.46	SU
Discharge Flow =	0.6	MGD

Parameter	Background	Water Quality Criteria				Wasteload Allocations				Antidegradation Baseline				Antidegradation Allocations				**Most Limiting Allocations**			
(ug/l unless noted)	Conc.	Acute	Chronic	HH (PWS)	HH	Acute	Chronic	HH (PWS)	HH	Acute	Chronic	HH (PWS)	HH	Acute	Chronic	HH (PWS)	HH	**Acute**	**Chronic**	**HH (PWS)**	**HH**
Acenapthene	5	--	--	na	9.9E+02	--	--	na	9.9E+02	--	--	--	--	--	--	--	--	**--**	**--**	**na**	**9.9E+02**
Acrolein	0	--	--	na	9.3E+00	--	--	na	9.3E+00	--	--	--	--	--	--	--	--	**--**	**--**	**na**	**9.3E+00**
Acrylonitrile[C]	0	--	--	na	2.5E+00	--	--	na	2.5E+00	--	--	--	--	--	--	--	--	**--**	**--**	**na**	**2.5E+00**
Aldrin [C]	0	3.0E+00	--	na	5.0E-04	3.0E+00	--	na	5.0E-04	--	--	--	--	--	--	--	--	**3.0E+00**	**--**	**na**	**5.0E-04**
Ammonia-N (mg/l) (Yearly)	0	7.79E+00	1.05E+00	na	--	7.79E+00	1.05E+00	na	--	--	--	--	--	--	--	--	--	**7.79E+00**	**1.05E+00**	**na**	**--**
Ammonia-N (mg/l) (High Flow)	0	7.79E+00	#VALUE!	na	--	7.79E+00	#VALUE!	na	--	--	--	--	--	--	--	--	--	**7.79E+00**	**#VALUE!**	**na**	**--**
Anthracene	0	--	--	na	4.0E+04	--	--	na	4.0E+04	--	--	--	--	--	--	--	--	**--**	**--**	**na**	**4.0E+04**
Antimony	0	--	--	na	6.4E+02	--	--	na	6.4E+02	--	--	--	--	--	--	--	--	**--**	**--**	**na**	**6.4E+02**
Arsenic	o	3.4E+02	1.5E+02	na	--	3.4E+02	1.5E+02	na	--	--	--	--	--	--	--	--	--	**3.4E+02**	**1.5E+02**	**na**	**--**
Barium	0	--	--	na	--	--	--	na	--	--	--	--	--	--	--	--	--	**--**	**--**	**na**	**--**
Benzene [C]	0	--	--	na	5.1E+02	--	--	na	5.1E+02	--	--	--	--	--	--	--	--	**--**	**--**	**na**	**5.1E+02**
Benzidine[C]	0	--	--	na	2.0E-03	--	--	na	2.0E-03	--	--	--	--	--	--	--	--	**--**	**--**	**na**	**2.0E-03**
Benzo (a) anthracene [C]	0	--	--	na	1.8E-01	--	--	na	1.8E-01	--	--	--	--	--	--	--	--	**--**	**--**	**na**	**1.8E-01**
Benzo (b) fluoranthene [C]	0	--	--	na	1.8E-01	--	--	na	1.8E-01	--	--	--	--	--	--	--	--	**--**	**--**	**na**	**1.8E-01**
Benzo (k) fluoranthene [C]	0	--	--	na	1.8E-01	--	--	na	1.8E-01	--	--	--	--	--	--	--	--	**--**	**--**	**na**	**1.8E-01**
Benzo (a) pyrene [C]	0	--	--	na	1.8E-01	--	--	na	1.8E-01	--	--	--	--	--	--	--	--	**--**	**--**	**na**	**1.8E-01**
Bis2-Chloroethyl Ether [C]	0	--	--	na	5.3E+00	--	--	na	5.3E+00	--	--	--	--	--	--	--	--	**--**	**--**	**na**	**5.3E+00**
Bis2-Chloroisopropyl Ether	0	--	--	na	6.5E+04	--	--	na	6.5E+04	--	--	--	--	--	--	--	--	**--**	**--**	**na**	**6.5E+04**
Bis 2-Ethylhexyl Phthalate [C]	0	--	--	na	2.2E+01	--	--	na	2.2E+01	--	--	--	--	--	--	--	--	**--**	**--**	**na**	**2.2E+01**
Bromoform [C]	0	--	--	na	1.4E+03	--	--	na	1.4E+03	--	--	--	--	--	--	--	--	**--**	**--**	**na**	**1.4E+03**
Butylbenzylphthalate	0	--	--	na	1.9E+03	--	--	na	1.9E+03	--	--	--	--	--	--	--	--	**--**	**--**	**na**	**1.9E+03**
Cadmium	0	5.6E+00	1.5E+00	na	--	5.6E+00	1.5E+00	na	--	--	--	--	--	--	--	--	--	**5.6E+00**	**1.5E+00**	**na**	**--**
Carbon Tetrachloride [C]	0	--	--	na	1.6E+01	--	--	na	1.6E+01	--	--	--	--	--	--	--	--	**--**	**--**	**na**	**1.6E+01**
Chlordane [C]	0	2.4E+00	4.3E-03	na	8.1E-03	2.4E+00	4.3E-03	na	8.1E-03	--	--	--	--	--	--	--	--	**2.4E+00**	**4.3E-03**	**na**	**8.1E-03**
Chloride	0	8.6E+05	2.3E+05	na	--	8.6E+05	2.3E+05	na	--	--	--	--	--	--	--	--	--	**8.6E+05**	**2.3E+05**	**na**	**--**
TRC	0	1.9E+01	1.1E+01	na	--	1.9E+01	1.1E+01	na	--	--	--	--	--	--	--	--	--	**1.9E+01**	**1.1E+01**	**na**	**--**
Chlorobenzene	0	--	--	na	1.6E+03	--	--	na	1.6E+03	--	--	--	--	--	--	--	--	**--**	**--**	**na**	**1.6E+03**

Parameter	Background	Water Quality Criteria				Wasteload Allocations				Antidegradation Baseline				Antidegradation Allocations				**Most Limiting Allocations**			
(ug/l unless noted)	Conc.	Acute	Chronic	HH (PWS)	HH	Acute	Chronic	HH (PWS)	HH	Acute	Chronic	HH (PWS)	HH	Acute	Chronic	HH (PWS)	HH	**Acute**	**Chronic**	**HH (PWS)**	**HH**
Chlorodibromomethane[C]	0	--	--	na	1.3E+02	--	--	na	1.3E+02	--	--	--	--	--	--	--	--	**--**	**--**	**na**	**1.3E+02**
Chloroform	0	--	--	na	1.1E+04	--	--	na	1.1E+04	--	--	--	--	--	--	--	--	**--**	**--**	**na**	**1.1E+04**
2-Chloronaphthalene	0	--	--	na	1.6E+03	--	--	na	1.6E+03	--	--	--	--	--	--	--	--	**--**	**--**	**na**	**1.6E+03**
2-Chlorophenol	0	--	--	na	1.5E+02	--	--	na	1.5E+02	--	--	--	--	--	--	--	--	**--**	**--**	**na**	**1.5E+02**
Chlorpyrifos	0	8.3E-02	4.1E-02	na	--	8.3E-02	4.1E-02	na	--	--	--	--	--	--	--	--	--	**8.3E-02**	**4.1E-02**	**na**	**--**
Chromium III	0	7.4E+02	9.6E+01	na	--	7.4E+02	9.6E+01	na	--	--	--	--	--	--	--	--	--	**7.4E+02**	**9.6E+01**	**na**	**--**
Chromium VI	0	1.6E+01	1.1E+01	na	--	1.6E+01	1.1E+01	na	--	--	--	--	--	--	--	--	--	**1.6E+01**	**1.1E+01**	**na**	**--**
Chromium, Total	0	--	--	1.0E+02	--	--	--	na	--	--	--	--	--	--	--	--	--	**--**	**--**	**na**	**--**
Chrysene [C]	0	--	--	na	1.8E-02	--	--	na	1.8E-02	--	--	--	--	--	--	--	--	**--**	**--**	**na**	**1.8E-02**
Copper	0	1.8E+01	1.2E+01	na	--	1.8E+01	1.2E+01	na	--	--	--	--	--	--	--	--	--	**1.8E+01**	**1.2E+01**	**na**	**--**
Cyanide, Free	0	2.2E+01	5.2E+00	na	1.6E+04	2.2E+01	5.2E+00	na	1.6E+04	--	--	--	--	--	--	--	--	**2.2E+01**	**5.2E+00**	**na**	**1.6E+04**
DDD [C]	0	--	--	na	3.1E-03	--	--	na	3.1E-03	--	--	--	--	--	--	--	--	**--**	**--**	**na**	**3.1E-03**
DDE [C]	0	--	--	na	2.2E-03	--	--	na	2.2E-03	--	--	--	--	--	--	--	--	**--**	**--**	**na**	**2.2E-03**
DDT [C]	0	1.1E+00	1.0E-03	na	2.2E-03	1.1E+00	1.0E-03	na	2.2E-03	--	--	--	--	--	--	--	--	**1.1E+00**	**1.0E-03**	**na**	**2.2E-03**
Demeton	0	--	1.0E-01	na	--	--	1.0E-01	na	--	--	--	--	--	--	--	--	--	**--**	**1.0E-01**	**na**	**--**
Diazinon	0	1.7E-01	1.7E-01	na	--	1.7E-01	1.7E-01	na	--	--	--	--	--	--	--	--	--	**1.7E-01**	**1.7E-01**	**na**	**--**
Dibenz(a,h)anthracene [C]	0	--	--	na	1.8E-01	--	--	na	1.8E-01	--	--	--	--	--	--	--	--	**--**	**--**	**na**	**1.8E-01**
1,2-Dichlorobenzene	0	--	--	na	1.3E+03	--	--	na	1.3E+03	--	--	--	--	--	--	--	--	**--**	**--**	**na**	**1.3E+03**
1,3-Dichlorobenzene	0	--	--	na	9.6E+02	--	--	na	9.6E+02	--	--	--	--	--	--	--	--	**--**	**--**	**na**	**9.6E+02**
1,4-Dichlorobenzene	0	--	--	na	1.9E+02	--	--	na	1.9E+02	--	--	--	--	--	--	--	--	**--**	**--**	**na**	**1.9E+02**
3,3-Dichlorobenzidine[C]	0	--	--	na	2.8E-01	--	--	na	2.8E-01	--	--	--	--	--	--	--	--	**--**	**--**	**na**	**2.8E-01**
Dichlorobromomethane [C]	0	--	--	na	1.7E+02	--	--	na	1.7E+02	--	--	--	--	--	--	--	--	**--**	**--**	**na**	**1.7E+02**
1,2-Dichloroethane [C]	0	--	--	na	3.7E+02	--	--	na	3.7E+02	--	--	--	--	--	--	--	--	**--**	**--**	**na**	**3.7E+02**
1,1-Dichloroethylene	0	--	--	na	7.1E+03	--	--	na	7.1E+03	--	--	--	--	--	--	--	--	**--**	**--**	**na**	**7.1E+03**
1,2-trans-dichloroethylene	0	--	--	na	1.0E+04	--	--	na	1.0E+04	--	--	--	--	--	--	--	--	**--**	**--**	**na**	**1.0E+04**
2,4-Dichlorophenol	0	--	--	na	2.9E+02	--	--	na	2.9E+02	--	--	--	--	--	--	--	--	**--**	**--**	**na**	**2.9E+02**
2,4-Dichlorophenoxy acetic acid (2,4-D)	0	--	--	na	--	--	--	na	--	--	--	--	--	--	--	--	--	**--**	**--**	**na**	**--**
1,2-Dichloropropane[C]	0	--	--	na	1.5E+02	--	--	na	1.5E+02	--	--	--	--	--	--	--	--	**--**	**--**	**na**	**1.5E+02**
1,3-Dichloropropene [C]	0	--	--	na	2.1E+02	--	--	na	2.1E+02	--	--	--	--	--	--	--	--	**--**	**--**	**na**	**2.1E+02**
Dieldrin [C]	0	2.4E-01	5.6E-02	na	5.4E-04	2.4E-01	5.6E-02	na	5.4E-04	--	--	--	--	--	--	--	--	**2.4E-01**	**5.6E-02**	**na**	**5.4E-04**
Diethyl Phthalate	0	--	--	na	4.4E+04	--	--	na	4.4E+04	--	--	--	--	--	--	--	--	**--**	**--**	**na**	**4.4E+04**
2,4-Dimethylphenol	0	--	--	na	8.5E+02	--	--	na	8.5E+02	--	--	--	--	--	--	--	--	**--**	**--**	**na**	**8.5E+02**
Dimethyl Phthalate	0	--	--	na	1.1E+06	--	--	na	1.1E+06	--	--	--	--	--	--	--	--	**--**	**--**	**na**	**1.1E+06**
Di-n-Butyl Phthalate	0	--	--	na	4.5E+03	--	--	na	4.5E+03	--	--	--	--	--	--	--	--	**--**	**--**	**na**	**4.5E+03**
2,4 Dinitrophenol	0	--	--	na	5.3E+03	--	--	na	5.3E+03	--	--	--	--	--	--	--	--	**--**	**--**	**na**	**5.3E+03**
2-Methyl-4,6-Dinitrophenol	0	--	--	na	2.8E+02	--	--	na	2.8E+02	--	--	--	--	--	--	--	--	**--**	**--**	**na**	**2.8E+02**
2,4-Dinitrotoluene [C]	0	--	--	na	3.4E+01	--	--	na	3.4E+01	--	--	--	--	--	--	--	--	**--**	**--**	**na**	**3.4E+01**
Dioxin 2,3,7,8-tetrachlorodibenzo-p-dioxin	0	--	--	na	5.1E-08	--	--	na	5.1E-08	--	--	--	--	--	--	--	--	**--**	**--**	**na**	**5.1E-08**
1,2-Diphenylhydrazine[C]	0	--	--	na	2.0E+00	--	--	na	2.0E+00	--	--	--	--	--	--	--	--	**--**	**--**	**na**	**2.0E+00**
Alpha-Endosulfan	0	2.2E-01	5.6E-02	na	8.9E+01	2.2E-01	5.6E-02	na	8.9E+01	--	--	--	--	--	--	--	--	**2.2E-01**	**5.6E-02**	**na**	**8.9E+01**
Beta-Endosulfan	0	2.2E-01	5.6E-02	na	8.9E+01	2.2E-01	5.6E-02	na	8.9E+01	--	--	--	--	--	--	--	--	**2.2E-01**	**5.6E-02**	**na**	**8.9E+01**
Alpha + Beta Endosulfan	0	2.2E-01	5.6E-02	--	--	2.2E-01	5.6E-02	--	--	--	--	--	--	--	--	--	--	**2.2E-01**	**5.6E-02**	**--**	**--**
Endosulfan Sulfate	0	--	--	na	8.9E+01	--	--	na	8.9E+01	--	--	--	--	--	--	--	--	**--**	**--**	**na**	**8.9E+01**
Endrin	0	8.6E-02	3.6E-02	na	6.0E-02	8.6E-02	3.6E-02	na	6.0E-02	--	--	--	--	--	--	--	--	**8.6E-02**	**3.6E-02**	**na**	**6.0E-02**
Endrin Aldehyde	0	--	--	na	3.0E-01	--	--	na	3.0E-01	--	--	--	--	--	--	--	--	**--**	**--**	**na**	**3.0E-01**

Parameter	Background	Water Quality Criteria				Wasteload Allocations				Antidegradation Baseline				Antidegradation Allocations				**Most Limiting Allocations**			
(ug/l unless noted)	Conc.	Acute	Chronic	HH (PWS)	HH	Acute	Chronic	HH (PWS)	HH	Acute	Chronic	HH (PWS)	HH	Acute	Chronic	HH (PWS)	HH	**Acute**	**Chronic**	**HH (PWS)**	**HH**
Ethylbenzene	0	--	--	na	2.1E+03	--	--	na	2.1E+03	--	--	--	--	--	--	--	--	**--**	**--**	**na**	**2.1E+03**
Fluoranthene	0	--	--	na	1.4E+02	--	--	na	1.4E+02	--	--	--	--	--	--	--	--	**--**	**--**	**na**	**1.4E+02**
Fluorene	0	--	--	na	5.3E+03	--	--	na	5.3E+03	--	--	--	--	--	--	--	--	**--**	**--**	**na**	**5.3E+03**
Foaming Agents	0	--	--	na	--	--	--	na	--	--	--	--	--	--	--	--	--	**--**	**--**	**na**	**--**
Guthion	0	--	1.0E-02	na	--	--	1.0E-02	na	--	--	--	--	--	--	--	--	--	**--**	**1.0E-02**	**na**	**--**
Heptachlor [C]	0	5.2E-01	3.8E-03	na	7.9E-04	5.2E-01	3.8E-03	na	7.9E-04	--	--	--	--	--	--	--	--	**5.2E-01**	**3.8E-03**	**na**	**7.9E-04**
Heptachlor Epoxide[C]	0	5.2E-01	3.8E-03	na	3.9E-04	5.2E-01	3.8E-03	na	3.9E-04	--	--	--	--	--	--	--	--	**5.2E-01**	**3.8E-03**	**na**	**3.9E-04**
Hexachlorobenzene[C]	0	--	--	na	2.9E-03	--	--	na	2.9E-03	--	--	--	--	--	--	--	--	**--**	**--**	**na**	**2.9E-03**
Hexachlorobutadiene[C]	0	--	--	na	1.8E+02	--	--	na	1.8E+02	--	--	--	--	--	--	--	--	**--**	**--**	**na**	**1.8E+02**
Hexachlorocyclohexane Alpha-BHC[C]	0	--	--	na	4.9E-02	--	--	na	4.9E-02	--	--	--	--	--	--	--	--	**--**	**--**	**na**	**4.9E-02**
Hexachlorocyclohexane Beta-BHC[C]	0	--	--	na	1.7E-01	--	--	na	1.7E-01	--	--	--	--	--	--	--	--	**--**	**--**	**na**	**1.7E-01**
Hexachlorocyclohexane Gamma-BHC[C] (Lindane)	0	9.5E-01	na	na	1.8E+00	9.5E-01	--	na	1.8E+00	--	--	--	--	--	--	--	--	**9.5E-01**	**--**	**na**	**1.8E+00**
Hexachlorocyclopentadiene	0	--	--	na	1.1E+03	--	--	na	1.1E+03	--	--	--	--	--	--	--	--	**--**	**--**	**na**	**1.1E+03**
Hexachloroethane[C]	0	--	--	na	3.3E+01	--	--	na	3.3E+01	--	--	--	--	--	--	--	--	**--**	**--**	**na**	**3.3E+01**
Hydrogen Sulfide	0	--	2.0E+00	na	--	--	2.0E+00	na	--	--	--	--	--	--	--	--	--	**--**	**2.0E+00**	**na**	**--**
Indeno (1,2,3-cd) pyrene [C]	0	--	--	na	1.8E-01	--	--	na	1.8E-01	--	--	--	--	--	--	--	--	**--**	**--**	**na**	**1.8E-01**
Iron	0	--	--	na	--	--	--	na	--	--	--	--	--	--	--	--	--	**--**	**--**	**na**	**--**
Isophorone[C]	0	--	--	na	9.6E+03	--	--	na	9.6E+03	--	--	--	--	--	--	--	--	**--**	**--**	**na**	**9.6E+03**
Kepone	0	--	0.0E+00	na	--	--	0.0E+00	na	--	--	--	--	--	--	--	--	--	**--**	**0.0E+00**	**na**	**--**
Lead	0	1.8E+02	2.0E+01	na	--	1.8E+02	2.0E+01	na	--	--	--	--	--	--	--	--	--	**1.8E+02**	**2.0E+01**	**na**	**--**
Malathion	0	--	1.0E-01	na	--	--	1.0E-01	na	--	--	--	--	--	--	--	--	--	**--**	**1.0E-01**	**na**	**--**
Manganese	0	--	--	na	--	--	--	na	--	--	--	--	--	--	--	--	--	**--**	**--**	**na**	**--**
Mercury	0	1.4E+00	7.7E-01	- -	- -	1.4E+00	7.7E-01	- -	- -	--	--	--	--	--	--	--	--	**1.4E+00**	**7.7E-01**	**- -**	**- -**
Methyl Bromide	0	--	--	na	1.5E+03	--	--	na	1.5E+03	--	--	--	--	--	--	--	--	**--**	**--**	**na**	**1.5E+03**
Methylene Chloride [C]	0	--	--	na	5.9E+03	--	--	na	5.9E+03	--	--	--	--	--	--	--	--	**--**	**--**	**na**	**5.9E+03**
Methoxychlor	0	--	3.0E-02	na	--	--	3.0E-02	na	--	--	--	--	--	--	--	--	--	**--**	**3.0E-02**	**na**	**--**
Mirex	0	--	0.0E+00	na	--	--	0.0E+00	na	--	--	--	--	--	--	--	--	--	**--**	**0.0E+00**	**na**	**--**
Nickel	0	2.4E+02	2.7E+01	na	4.6E+03	2.4E+02	2.7E+01	na	4.6E+03	--	--	--	--	--	--	--	--	**2.4E+02**	**2.7E+01**	**na**	**4.6E+03**
Nitrate (as N)	0	--	--	na	--	--	--	na	--	--	--	--	--	--	--	--	--	**--**	**--**	**na**	**--**
Nitrobenzene	0	--	--	na	6.9E+02	--	--	na	6.9E+02	--	--	--	--	--	--	--	--	**--**	**--**	**na**	**6.9E+02**
N-Nitrosodimethylamine[C]	0	--	--	na	3.0E+01	--	--	na	3.0E+01	--	--	--	--	--	--	--	--	**--**	**--**	**na**	**3.0E+01**
N-Nitrosodiphenylamine[C]	0	--	--	na	6.0E+01	--	--	na	6.0E+01	--	--	--	--	--	--	--	--	**--**	**--**	**na**	**6.0E+01**
N-Nitrosodi-n-propylamine[C]	0	--	--	na	5.1E+00	--	--	na	5.1E+00	--	--	--	--	--	--	--	--	**--**	**--**	**na**	**5.1E+00**
Nonylphenol	0	2.8E+01	6.6E+00	--	--	2.8E+01	6.6E+00	na	--	--	--	--	--	--	--	--	--	**2.8E+01**	**6.6E+00**	**na**	**--**
Parathion	0	6.5E-02	1.3E-02	na	--	6.5E-02	1.3E-02	na	--	--	--	--	--	--	--	--	--	**6.5E-02**	**1.3E-02**	**na**	**--**
PCB Total[C]	0	--	1.4E-02	na	6.4E-04	--	1.4E-02	na	6.4E-04	--	--	--	--	--	--	--	--	**--**	**1.4E-02**	**na**	**6.4E-04**
Pentachlorophenol [C]	0	1.4E+01	1.1E+01	na	3.0E+01	1.4E+01	1.1E+01	na	3.0E+01	--	--	--	--	--	--	--	--	**1.4E+01**	**1.1E+01**	**na**	**3.0E+01**
Phenol	0	--	--	na	8.6E+05	--	--	na	8.6E+05	--	--	--	--	--	--	--	--	**--**	**--**	**na**	**8.6E+05**
Pyrene	0	--	--	na	4.0E+03	--	--	na	4.0E+03	--	--	--	--	--	--	--	--	**--**	**--**	**na**	**4.0E+03**
Radionuclides	0	--	--	na	--	--	--	na	--	--	--	--	--	--	--	--	--	**--**	**--**	**na**	**--**
Gross Alpha Activity (pCi/L)	0	--	--	na	--	--	--	na	--	--	--	--	--	--	--	--	--	**--**	**--**	**na**	**--**
Beta and Photon Activity (mrem/yr)	0	--	--	na	4.0E+00	--	--	na	4.0E+00	--	--	--	--	--	--	--	--	**--**	**--**	**na**	**4.0E+00**
Radium 226 + 228 (pCi/L)	0	--	--	na	--	--	--	na	--	--	--	--	--	--	--	--	--	**--**	**--**	**na**	**--**
Uranium (ug/l)	0	--	--	na	--	--	--	na	--	--	--	--	--	--	--	--	--	**--**	**--**	**na**	**--**

Parameter	Background	Water Quality Criteria				Wasteload Allocations				Antidegradation Baseline				Antidegradation Allocations				**Most Limiting Allocations**			
(ug/l unless noted)	Conc.	Acute	Chronic	HH (PWS)	HH	Acute	Chronic	HH (PWS)	HH	Acute	Chronic	HH (PWS)	HH	Acute	Chronic	HH (PWS)	HH	**Acute**	**Chronic**	**HH (PWS)**	**HH**
Selenium, Total Recoverable	0	2.0E+01	5.0E+00	na	4.2E+03	2.0E+01	5.0E+00	na	4.2E+03	--	--	--	--	--	--	--	--	**2.0E+01**	**5.0E+00**	**na**	**4.2E+03**
Silver	0	6.0E+00	--	na	--	6.0E+00	--	na	--	--	--	--	--	--	--	--	--	**6.0E+00**	**--**	**na**	**--**
Sulfate	0	--	--	na	--	--	--	na	--	--	--	--	--	--	--	--	--	**--**	**--**	**na**	**--**
1,1,2,2-Tetrachloroethane[C]	0	--	--	na	4.0E+01	--	--	na	4.0E+01	--	--	--	--	--	--	--	--	**--**	**--**	**na**	**4.0E+01**
Tetrachloroethylene[C]	0	--	--	na	3.3E+01	--	--	na	3.3E+01	--	--	--	--	--	--	--	--	**--**	**--**	**na**	**3.3E+01**
Thallium	0	--	--	na	4.7E-01	--	--	na	4.7E-01	--	--	--	--	--	--	--	--	**--**	**--**	**na**	**4.7E-01**
Toluene	0	--	--	na	6.0E+03	--	--	na	6.0E+03	--	--	--	--	--	--	--	--	**--**	**--**	**na**	**6.0E+03**
Total dissolved solids	0	--	--	na	--	--	--	na	--	--	--	--	--	--	--	--	--	**--**	**--**	**na**	**--**
Toxaphene [C]	0	7.3E-01	2.0E-04	na	2.8E-03	7.3E-01	2.0E-04	na	2.8E-03	--	--	--	--	--	--	--	--	**7.3E-01**	**2.0E-04**	**na**	**2.8E-03**
Tributyltin	0	4.6E-01	7.2E-02	na	--	4.6E-01	7.2E-02	na	--	--	--	--	--	--	--	--	--	**4.6E-01**	**7.2E-02**	**na**	**--**
1,2,4-Trichlorobenzene	0	--	--	na	7.0E+01	--	--	na	7.0E+01	--	--	--	--	--	--	--	--	**--**	**--**	**na**	**7.0E+01**
1,1,2-Trichloroethane[C]	0	--	--	na	1.6E+02	--	--	na	1.6E+02	--	--	--	--	--	--	--	--	**--**	**--**	**na**	**1.6E+02**
Trichloroethylene [C]	0	--	--	na	3.0E+02	--	--	na	3.0E+02	--	--	--	--	--	--	--	--	**--**	**--**	**na**	**3.0E+02**
2,4,6-Trichlorophenol [C]	0	--	--	na	2.4E+01	--	--	na	2.4E+01	--	--	--	--	--	--	--	--	**--**	**--**	**na**	**2.4E+01**
2-(2,4,5-Trichlorophenoxy) propionic acid (Silvex)	0	--	--	na	--	--	--	na	--	--	--	--	--	--	--	--	--	**--**	**--**	**na**	**--**
Vinyl Chloride[C]	0	--	--	na	2.4E+01	--	--	na	2.4E+01	--	--	--	--	--	--	--	--	**--**	**--**	**na**	**2.4E+01**
Zinc	0	1.5E+02	1.6E+02	na	2.6E+04	1.5E+02	1.6E+02	na	2.6E+04	--	--	--	--	--	--	--	--	**1.5E+02**	**1.6E+02**	**na**	**2.6E+04**

Notes:

1. All concentrations expressed as micrograms/liter (ug/l), unless noted otherwise
2. Discharge flow is highest monthly average or Form 2C maximum for Industries and design flow for Municipals
3. Metals measured as Dissolved, unless specified otherwise
4. "C" indicates a carcinogenic parameter
5. Regular WLAs are mass balances (minus background concentration) using the % of stream flow entered above under Mixing Information.
   Antidegradation WLAs are based upon a complete mix.
6. Antideg. Baseline = (0.25(WQC - background conc.) + background conc.) for acute and chronic
   = (0.1(WQC - background conc.) + background conc.) for human health
7. WLAs established at the following stream flows: 1Q10 for Acute, 30Q10 for Chronic Ammonia, 7Q10 for Other Chronic, 30Q5 for Non-carcinogens and Harmonic Mean for Carcinogens. To apply mixing ratios from a model set the stream flow equal to (mixing ratio - 1), effluent flow equal to 1 and 100% mix.

Metal	Target Value (SSTV)
Antimony	6.4E+02
Arsenic	9.0E+01
Barium	na
Cadmium	8.8E-01
Chromium III	5.8E+01
Chromium VI	6.4E+00
Copper	7.1E+00
Iron	na
Lead	1.2E+01
Manganese	na
Mercury	4.6E-01
Nickel	1.6E+01
Selenium	3.0E+00
Silver	2.4E+00
Zinc	6.2E+01

Note: do not use QL's lower than the minimum QL's provided in agency guidance

8/22/2011 4:05:28 PM

Facility = Black Swamp Regional WWTF
Chemical = Ammonia (mg/L)
Chronic averaging period = 30
WLAa = 7.79
WLAc = 1.05
Q.L. = 1 mg/L
# samples/mo. = 1
# samples/wk. = 1

Summary of Statistics:

observations = 1
Expected Value = 3.00
Variance = 3.24
C.V. = 0.6
97th percentile daily values = 7.30025
97th percentile 4 day average = 4.99137
97th percentile 30 day average= 3.61815
< Q.L. = 0
Model used = BPJ Assumptions, type 2 data

A limit is needed based on Chronic Toxicity
Maximum Daily Limit = 2.11855359808713
Average Weekly Limit = 2.11855359808713
Average Monthly Limit = 2.11855359808713

The data are:

3.00

8/22/2011 5:36:55 PM

Facility = Black Swamp Regional WWTF
Chemical = Chlorides (ug/L)
Chronic averaging period = 4
WLAa = 860000
WLAc = 230000
Q.L. = 1
# samples/mo. = 1
# samples/wk. = 1

Summary of Statistics:

observations = 1
Expected Value = 243
Variance = 21257.6
C.V. = 0.6
97th percentile daily values = 591.320
97th percentile 4 day average = 404.301
97th percentile 30 day average= 293.070
< Q.L. = 0
Model used = BPJ Assumptions, type 2 data

No Limit is required for this material

The data are:

243

8/22/2011 5:29:03 PM

Facility = Black Swamp Regional WWTF
Chemical = Dissolved Chromium VI (ug/L)
Chronic averaging period = 4
WLAa = 16
WLAc = 11
Q.L. = 3
# samples/mo. = 1
# samples/wk. = 1

Summary of Statistics:

observations = 1
Expected Value = 3
Variance = 3.24
C.V. = 0.6
97th percentile daily values = 7.30025
97th percentile 4 day average = 4.99137
97th percentile 30 day average= 3.61815
< Q.L. = 0
Model used = BPJ Assumptions, type 2 data

No Limit is required for this material

The data are:

3

8/22/2011 5:30:42 PM

Facility = Black Swamp Regional WWTF
Chemical = Dissolved Copper (ug/L)
Chronic averaging period = 4
WLAa = 18
WLAc = 12
Q.L. = 0.5
# samples/mo. = 1
# samples/wk. = 1

Summary of Statistics:

observations = 1
Expected Value = 4.7
Variance = 7.9524
C.V. = 0.6
97th percentile daily values = 11.4370
97th percentile 4 day average = 7.81981
97th percentile 30 day average= 5.66845
< Q.L. = 0
Model used = BPJ Assumptions, type 2 data

No Limit is required for this material

The data are:

4.7

8/22/2011 5:39:02 PM

Facility = Black Swamp Regional WWTF
Chemical = Hydrogen sulfide (ug/L)
Chronic averaging period = 4
WLAa =
WLAc = 2
Q.L. = 28
# samples/mo. = 1
# samples/wk. = 1

Summary of Statistics:

observations = 1
Expected Value = 110
Variance = 4356
C.V. = 0.6
97th percentile daily values = 267.675
97th percentile 4 day average = 183.016
97th percentile 30 day average= 132.665
< Q.L. = 0
Model used = BPJ Assumptions, type 2 data

A limit is needed based on Chronic Toxicity
Maximum Daily Limit = 2.92514956810646
Average Weekly Limit = 2.92514956810646
Average Monthly Limit = 2.92514956810646

The data are:

110

8/22/2011 5:31:57 PM

Facility = Black Swamp Regional WWTF
Chemical = Dissolved Nickel (ug/L)
Chronic averaging period = 4
WLAa = 240
WLAc = 27
Q.L. = 0.5
# samples/mo. = 1
# samples/wk. = 1

Summary of Statistics:

observations = 1
Expected Value = 2.4
Variance = 2.0736
C.V. = 0.6
97th percentile daily values = 5.84020
97th percentile 4 day average = 3.99309
97th percentile 30 day average= 2.89452
< Q.L. = 0
Model used = BPJ Assumptions, type 2 data

No Limit is required for this material

The data are:

2.4

8/22/2011 5:34:01 PM

Facility = Black Swamp Regional WWTF
Chemical = Total Recoverable Selenium (ug/L)
Chronic averaging period = 4
WLAa = 20
WLAc = 5
Q.L. = 1
# samples/mo. = 1
# samples/wk. = 1

Summary of Statistics:

observations = 1
Expected Value = 2
Variance = 1.44
C.V. = 0.6
97th percentile daily values = 4.86683
97th percentile 4 day average = 3.32758
97th percentile 30 day average= 2.41210
< Q.L. = 0
Model used = BPJ Assumptions, type 2 data

No Limit is required for this material

The data are:

2

8/22/2011 4:01:44 PM

Facility = Black Swamp Regional WWTF
Chemical = TRC (ug/L)
Chronic averaging period = 4
WLAa = 19
WLAc = 11
Q.L. = 1
# samples/mo. = 90
# samples/wk. = 21

Summary of Statistics:

observations = 1
Expected Value = 20000
Variance = 1440000
C.V. = 0.6
97th percentile daily values = 48668.3
97th percentile 4 day average = 33275.8
97th percentile 30 day average= 24121.0
< Q.L. = 0
Model used = BPJ Assumptions, type 2 data

A limit is needed based on Chronic Toxicity
Maximum Daily Limit = 16.0883226245855
Average Weekly Limit = 8.37736286379464
Average Monthly Limit = 7.39793639872119

The data are:

20000

8/22/2011 5:35:22 PM

Facility = Black Swamp Regional WWTF
Chemical = Dissolved Zinc (ug/L)
Chronic averaging period = 4
WLAa = 150
WLAc = 160
Q.L. = 1
# samples/mo. = 1
# samples/wk. = 1

Summary of Statistics:

observations = 1
Expected Value = 78
Variance = 2190.24
C.V. = 0.6
97th percentile daily values = 189.806
97th percentile 4 day average = 129.775
97th percentile 30 day average= 94.0721
< Q.L. = 0
Model used = BPJ Assumptions, type 2 data

No Limit is required for this material

The data are:

78

2006

MSTRANTI DATA SOURCE REPORT

Stream Information (Receiving stream has no sustainable flow except for effluent discharge, effluent data used)	
Mean Hardness	Additional Hardness Data Collected 10/12/2006
90% Temperature (annual)	Application Data
90% Temperature (wet season)	NA
90% Maximum pH	DMR Data
10% Maximum pH	DMR Data
Tier Designation	Flow Frequency Memo
Stream Flows	
All Data	Flow Frequency Memo
Mixing Information	
All Data	No Stream Flows, 100% Mix
Effluent Information	
Mean Hardness	Additional Hardness Data Collected 10/12/2006
90% Temperature (annual)	Application Data
90% Temperature (wet season)	NA
90% Maximum pH	DMR Data
10% Maximum pH	DMR Data
Discharge Flow	Design Flow

Data Location:

Flow Frequency Memo – Attachment 1
DMR Data – Attachment 5
Application Data – Attachment 5
Additional Hardness Data – Attachment 5

2006 MSTRANTI

FRESHWATER
WATER QUALITY CRITERIA / WASTELOAD ALLOCATION ANALYSIS

Facility Name: Black Swamp WWTF Permit No.: VA0088978

Receiving Stream: Unnamed Tributary to Black Swamp Version: OWP Guidance Memo 00-2011 (8/24/00)

Stream Information

Mean Hardness (as CaCO3) =	25	mg/L
90% Temperature (Annual) =	24.4	deg C
90% Temperature (Wet season) =		deg C
90% Maximum pH =	8.72	SU
10% Maximum pH =	7.53	SU
Tier Designation (1 or 2) =	1	
Public Water Supply (PWS) Y/N? =	n	
Trout Present Y/N? =	n	
Early Life Stages Present Y/N? =	n	

Stream Flows

1Q10 (Annual) =	0	MGD
7Q10 (Annual) =	0	MGD
30Q10 (Annual) =	0	MGD
1Q10 (Wet season) =	0	MGD
30Q10 (Wet season)	0	MGD
30Q5 =	0	MGD
Harmonic Mean =		MGD
Annual Average =		MGD

Mixing Information

Annual - 1Q10 Mix =	100	%
- 7Q10 Mix =	100	%
- 30Q10 Mix =	100	%
Wet Season - 1Q10 Mix =	100	%
- 30Q10 Mix =	100	%

Effluent Information

Mean Hardness (as CaCO3) =	316	mg/L
90% Temp (Annual) =	24.4	deg C
90% Temp (Wet season) =		deg C
90% Maximum pH =	8.72	SU
10% Maximum pH =	7.53	SU
Discharge Flow =	0.6	MGD

Parameter	Background	Water Quality Criteria				Wasteload Allocations				Antidegradation Baseline				Antidegradation Allocations				**Most Limiting Allocations**			
(ug/l unless noted)	Conc.	Acute	Chronic	HH (PWS)	HH	Acute	Chronic	HH (PWS)	HH	Acute	Chronic	HH (PWS)	HH	Acute	Chronic	HH (PWS)	HH	**Acute**	**Chronic**	**HH (PWS)**	**HH**
Acenapthene	0	--	--	na	2.7E+03	--	--	na	2.7E+03	--	--	--	--	--	--	--	--	--	--	na	2.7E+03
Acrolein	0	--	--	na	7.8E+02	--	--	na	7.8E+02	--	--	--	--	--	--	--	--	--	--	na	7.8E+02
Acrylonitrile[C]	0	--	--	na	6.6E+00	--	--	na	6.6E+00	--	--	--	--	--	--	--	--	--	--	na	6.6E+00
Aldrin [C]	0	3.0E+00	--	na	1.4E-03	3.0E+00	--	na	1.4E-03	--	--	--	--	--	--	--	--	3.0E+00	--	na	1.4E-03
Ammonia-N (mg/l) (Yearly)	0	2.13E+00	3.98E-01	na	--	2.1E+00	4.0E-01	na	--	--	--	--	--	--	--	--	--	2.1E+00	4.0E-01	na	--
Ammonia-N (mg/l) (High Flow)	0	2.13E+00	1.22E+00	na	--	2.1E+00	1.2E+00	na	--	--	--	--	--	--	--	--	--	2.1E+00	1.2E+00	na	--
Anthracene	0	--	--	na	1.1E+05	--	--	na	1.1E+05	--	--	--	--	--	--	--	--	--	--	na	1.1E+05
Antimony	0	--	--	na	4.3E+03	--	--	na	4.3E+03	--	--	--	--	--	--	--	--	--	--	na	4.3E+03
Arsenic	0	3.4E+02	1.5E+02	na	--	3.4E+02	1.5E+02	na	--	--	--	--	--	--	--	--	--	3.4E+02	1.5E+02	na	--
Barium	0	--	--	na	--	--	--	na	--	--	--	--	--	--	--	--	--	--	--	na	--
Benzene [C]	0	--	--	na	7.1E+02	--	--	na	7.1E+02	--	--	--	--	--	--	--	--	--	--	na	7.1E+02
Benzidine[C]	0	--	--	na	5.4E-03	--	--	na	5.4E-03	--	--	--	--	--	--	--	--	--	--	na	5.4E-03
Benzo (a) anthracene [C]	0	--	--	na	4.9E-01	--	--	na	4.9E-01	--	--	--	--	--	--	--	--	--	--	na	4.9E-01
Benzo (b) fluoranthene [C]	0	--	--	na	4.9E-01	--	--	na	4.9E-01	--	--	--	--	--	--	--	--	--	--	na	4.9E-01
Benzo (k) fluoranthene [C]	0	--	--	na	4.9E-01	--	--	na	4.9E-01	--	--	--	--	--	--	--	--	--	--	na	4.9E-01
Benzo (a) pyrene [C]	0	--	--	na	4.9E-01	--	--	na	4.9E-01	--	--	--	--	--	--	--	--	--	--	na	4.9E-01
Bis2-Chloroethyl Ether	0	--	--	na	1.4E+01	--	--	na	1.4E+01	--	--	--	--	--	--	--	--	--	--	na	1.4E+01
Bis2-Chloroisopropyl Ether	0	--	--	na	1.7E+05	--	--	na	1.7E+05	--	--	--	--	--	--	--	--	--	--	na	1.7E+05
Bromoform [C]	0	--	--	na	3.6E+03	--	--	na	3.6E+03	--	--	--	--	--	--	--	--	--	--	na	3.6E+03
Butylbenzylphthalate	0	--	--	na	5.2E+03	--	--	na	5.2E+03	--	--	--	--	--	--	--	--	--	--	na	5.2E+03
Cadmium	0	1.4E+01	2.8E+00	na	--	1.4E+01	2.8E+00	na	--	--	--	--	--	--	--	--	--	1.4E+01	2.8E+00	na	--
Carbon Tetrachloride [C]	0	--	--	na	4.4E+01	--	--	na	4.4E+01	--	--	--	--	--	--	--	--	--	--	na	4.4E+01
Chlordane [C]	0	2.4E+00	4.3E-03	na	2.2E-02	2.4E+00	4.3E-03	na	2.2E-02	--	--	--	--	--	--	--	--	2.4E+00	4.3E-03	na	2.2E-02
Chloride	0	8.6E+05	2.3E+05	na	--	8.6E+05	2.3E+05	na	--	--	--	--	--	--	--	--	--	8.6E+05	2.3E+05	na	--
TRC	0	1.9E+01	1.1E+01	na	--	1.9E+01	1.1E+01	na	--	--	--	--	--	--	--	--	--	1.9E+01	1.1E+01	na	--
Chlorobenzene	0	--	--	na	2.1E+04	--	--	na	2.1E+04	--	--	--	--	--	--	--	--	--	--	na	2.1E+04

Parameter	Background	Water Quality Criteria				Wasteload Allocations				Antidegradation Baseline				Antidegradation Allocations				Most Limiting Allocations			
(ug/l unless noted)	Conc.	Acute	Chronic	HH (PWS)	HH	Acute	Chronic	HH (PWS)	HH	Acute	Chronic	HH (PWS)	HH	Acute	Chronic	HH (PWS)	HH	Acute	Chronic	HH (PWS)	HH
Chlorodibromomethane[C]	0	--	--	na	3.4E+02	--	--	na	3.4E+02	--	--	--	--	--	--	--	--	--	--	na	3.4E+02
Chloroform [C]	0	--	--	na	2.9E+04	--	--	na	2.9E+04	--	--	--	--	--	--	--	--	--	--	na	2.9E+04
2-Chloronaphthalene	0	--	--	na	4.3E+03	--	--	na	4.3E+03	--	--	--	--	--	--	--	--	--	--	na	4.3E+03
2-Chlorophenol	0	--	--	na	4.0E+02	--	--	na	4.0E+02	--	--	--	--	--	--	--	--	--	--	na	4.0E+02
Chlorpyrifos	0	8.3E-02	4.1E-02	na	--	8.3E-02	4.1E-02	na	--	--	--	--	--	--	--	--	--	8.3E-02	4.1E-02	na	--
Chromium III	0	1.5E+03	1.9E+02	na	--	1.5E+03	1.9E+02	na	--	--	--	--	--	--	--	--	--	1.5E+03	1.9E+02	na	--
Chromium VI	0	1.6E+01	1.1E+01	na	--	1.6E+01	1.1E+01	na	--	--	--	--	--	--	--	--	--	1.6E+01	1.1E+01	na	--
Chromium, Total	0	--	--	na	--	--	--	na	--	--	--	--	--	--	--	--	--	--	--	na	--
Chrysene [C]	0	--	--	na	4.9E-01	--	--	na	4.9E-01	--	--	--	--	--	--	--	--	--	--	na	4.9E-01
Copper	0	4.0E+01	2.4E+01	na	--	4.0E+01	2.4E+01	na	--	--	--	--	--	--	--	--	--	4.0E+01	2.4E+01	na	--
Cyanide	0	2.2E+01	5.2E+00	na	2.2E+05	2.2E+01	5.2E+00	na	2.2E+05	--	--	--	--	--	--	--	--	2.2E+01	5.2E+00	na	2.2E+05
DDD [C]	0	--	--	na	8.4E-03	--	--	na	8.4E-03	--	--	--	--	--	--	--	--	--	--	na	8.4E-03
DDE [C]	0	--	--	na	5.9E-03	--	--	na	5.9E-03	--	--	--	--	--	--	--	--	--	--	na	5.9E-03
DDT [C]	0	1.1E+00	1.0E-03	na	5.9E-03	1.1E+00	1.0E-03	na	5.9E-03	--	--	--	--	--	--	--	--	1.1E+00	1.0E-03	na	5.9E-03
Demeton	0	--	1.0E-01	na	--	--	1.0E-01	na	--	--	--	--	--	--	--	--	--	--	1.0E-01	na	--
Dibenz(a,h)anthracene [C]	0	--	--	na	4.9E-01	--	--	na	4.9E-01	--	--	--	--	--	--	--	--	--	--	na	4.9E-01
Dibutyl phthalate	0	--	--	na	1.2E+04	--	--	na	1.2E+04	--	--	--	--	--	--	--	--	--	--	na	1.2E+04
Dichloromethane (Methylene Chloride) [C]	0	--	--	na	1.6E+04	--	--	na	1.6E+04	--	--	--	--	--	--	--	--	--	--	na	1.6E+04
1,2-Dichlorobenzene	0	--	--	na	1.7E+04	--	--	na	1.7E+04	--	--	--	--	--	--	--	--	--	--	na	1.7E+04
1,3-Dichlorobenzene	0	--	--	na	2.6E+03	--	--	na	2.6E+03	--	--	--	--	--	--	--	--	--	--	na	2.6E+03
1,4-Dichlorobenzene	0	--	--	na	2.6E+03	--	--	na	2.6E+03	--	--	--	--	--	--	--	--	--	--	na	2.6E+03
3,3-Dichlorobenzidine[C]	0	--	--	na	7.7E-01	--	--	na	7.7E-01	--	--	--	--	--	--	--	--	--	--	na	7.7E-01
Dichlorobromomethane [C]	0	--	--	na	4.6E+02	--	--	na	4.6E+02	--	--	--	--	--	--	--	--	--	--	na	4.6E+02
1,2-Dichloroethane [C]	0	--	--	na	9.9E+02	--	--	na	9.9E+02	--	--	--	--	--	--	--	--	--	--	na	9.9E+02
1,1-Dichloroethylene	0	--	--	na	1.7E+04	--	--	na	1.7E+04	--	--	--	--	--	--	--	--	--	--	na	1.7E+04
1,2-trans-dichloroethylene	0	--	--	na	1.4E+05	--	--	na	1.4E+05	--	--	--	--	--	--	--	--	--	--	na	1.4E+05
2,4-Dichlorophenol	0	--	--	na	7.9E+02	--	--	na	7.9E+02	--	--	--	--	--	--	--	--	--	--	na	7.9E+02
2,4-Dichlorophenoxy acetic acid (2,4-D)	0	--	--	na	--	--	--	na	--	--	--	--	--	--	--	--	--	--	--	na	--
1,2-Dichloropropane[C]	0	--	--	na	3.9E+02	--	--	na	3.9E+02	--	--	--	--	--	--	--	--	--	--	na	3.9E+02
1,3-Dichloropropene	0	--	--	na	1.7E+03	--	--	na	1.7E+03	--	--	--	--	--	--	--	--	--	--	na	1.7E+03
Dieldrin [C]	0	2.4E-01	5.6E-02	na	1.4E-03	2.4E-01	5.6E-02	na	1.4E-03	--	--	--	--	--	--	--	--	2.4E-01	5.6E-02	na	1.4E-03
Diethyl Phthalate	0	--	--	na	1.2E+05	--	--	na	1.2E+05	--	--	--	--	--	--	--	--	--	--	na	1.2E+05
Di-2-Ethylhexyl Phthalate [C]	0	--	--	na	5.9E+01	--	--	na	5.9E+01	--	--	--	--	--	--	--	--	--	--	na	5.9E+01
2,4-Dimethylphenol	0	--	--	na	2.3E+03	--	--	na	2.3E+03	--	--	--	--	--	--	--	--	--	--	na	2.3E+03
Dimethyl Phthalate	0	--	--	na	2.9E+06	--	--	na	2.9E+06	--	--	--	--	--	--	--	--	--	--	na	2.9E+06
Di-n-Butyl Phthalate	0	--	--	na	1.2E+04	--	--	na	1.2E+04	--	--	--	--	--	--	--	--	--	--	na	1.2E+04
2,4 Dinitrophenol	0	--	--	na	1.4E+04	--	--	na	1.4E+04	--	--	--	--	--	--	--	--	--	--	na	1.4E+04
2-Methyl-4,6-Dinitrophenol	0	--	--	na	7.65E+02	--	--	na	7.7E+02	--	--	--	--	--	--	--	--	--	--	na	7.7E+02
2,4-Dinitrotoluene [C]	0	--	--	na	9.1E+01	--	--	na	9.1E+01	--	--	--	--	--	--	--	--	--	--	na	9.1E+01
Dioxin (2,3,7,8-tetrachlorodibenzo-p-dioxin) (ppq)	0	--	--	na	1.2E-06	--	--	na	na	--	--	--	--	--	--	--	--	--	--	na	na
1,2-Diphenylhydrazine[C]	0	--	--	na	5.4E+00	--	--	na	5.4E+00	--	--	--	--	--	--	--	--	--	--	na	5.4E+00
Alpha-Endosulfan	0	2.2E-01	5.6E-02	na	2.4E+02	2.2E-01	5.6E-02	na	2.4E+02	--	--	--	--	--	--	--	--	2.2E-01	5.6E-02	na	2.4E+02
Beta-Endosulfan	0	2.2E-01	5.6E-02	na	2.4E+02	2.2E-01	5.6E-02	na	2.4E+02	--	--	--	--	--	--	--	--	2.2E-01	5.6E-02	na	2.4E+02
Endosulfan Sulfate	0	--	--	na	2.4E+02	--	--	na	2.4E+02	--	--	--	--	--	--	--	--	--	--	na	2.4E+02
Endrin	0	8.6E-02	3.6E-02	na	8.1E-01	8.6E-02	3.6E-02	na	8.1E-01	--	--	--	--	--	--	--	--	8.6E-02	3.6E-02	na	8.1E-01
Endrin Aldehyde	0	--	--	na	8.1E-01	--	--	na	8.1E-01	--	--	--	--	--	--	--	--	--	--	na	8.1E-01

Parameter	Background	Water Quality Criteria				Wasteload Allocations				Antidegradation Baseline				Antidegradation Allocations				**Most Limiting Allocations**			
(ug/l unless noted)	Conc.	Acute	Chronic	HH (PWS)	HH	Acute	Chronic	HH (PWS)	HH	Acute	Chronic	HH (PWS)	HH	Acute	Chronic	HH (PWS)	HH	**Acute**	**Chronic**	**HH (PWS)**	**HH**
Ethylbenzene	0	--	--	na	2.9E+04	--	--	na	2.9E+04	--	--	--	--	--	--	--	--	--	--	na	2.9E+04
Fluoranthene	0	--	--	na	3.7E+02	--	--	na	3.7E+02	--	--	--	--	--	--	--	--	--	--	na	3.7E+02
Fluorene	0	--	--	na	1.4E+04	--	--	na	1.4E+04	--	--	--	--	--	--	--	--	--	--	na	1.4E+04
Foaming Agents	0	--	--	na	--	--	--	na	--	--	--	--	--	--	--	--	--	--	--	na	--
Guthion	0	--	1.0E-02	na	--	--	1.0E-02	na	--	--	--	--	--	--	--	--	--	--	1.0E-02	na	--
Heptachlor [C]	0	5.2E-01	3.8E-03	na	2.1E-03	5.2E-01	3.8E-03	na	2.1E-03	--	--	--	--	--	--	--	--	5.2E-01	3.8E-03	na	2.1E-03
Heptachlor Epoxide[C]	0	5.2E-01	3.8E-03	na	1.1E-03	5.2E-01	3.8E-03	na	1.1E-03	--	--	--	--	--	--	--	--	5.2E-01	3.8E-03	na	1.1E-03
Hexachlorobenzene[C]	0	--	--	na	7.7E-03	--	--	na	7.7E-03	--	--	--	--	--	--	--	--	--	--	na	7.7E-03
Hexachlorobutadiene[C]	0	--	--	na	5.0E+02	--	--	na	5.0E+02	--	--	--	--	--	--	--	--	--	--	na	5.0E+02
Hexachlorocyclohexane Alpha-BHC[C]	0	--	--	na	1.3E-01	--	--	na	1.3E-01	--	--	--	--	--	--	--	--	--	--	na	1.3E-01
Hexachlorocyclohexane Beta-BHC[C]	0	--	--	na	4.6E-01	--	--	na	4.6E-01	--	--	--	--	--	--	--	--	--	--	na	4.6E-01
Hexachlorocyclohexane Gamma-BHC[C] (Lindane)	0	9.5E-01	na	na	6.3E-01	9.5E-01	--	na	6.3E-01	--	--	--	--	--	--	--	--	9.5E-01	--	na	6.3E-01
Hexachlorocyclopentadiene	0	--	--	na	1.7E+04	--	--	na	1.7E+04	--	--	--	--	--	--	--	--	--	--	na	1.7E+04
Hexachloroethane[C]	0	--	--	na	8.9E+01	--	--	na	8.9E+01	--	--	--	--	--	--	--	--	--	--	na	8.9E+01
Hydrogen Sulfide	0	--	2.0E+00	na	--	--	2.0E+00	na	--	--	--	--	--	--	--	--	--	--	2.0E+00	na	--
Indeno (1,2,3-cd) pyrene [C]	0	--	--	na	4.9E-01	--	--	na	4.9E-01	--	--	--	--	--	--	--	--	--	--	na	4.9E-01
Iron	0	--	--	na	--	--	--	na	--	--	--	--	--	--	--	--	--	--	--	na	--
Isophorone[C]	0	--	--	na	2.6E+04	--	--	na	2.6E+04	--	--	--	--	--	--	--	--	--	--	na	2.6E+04
Kepone	0	--	0.0E+00	na	--	--	0.0E+00	na	--	--	--	--	--	--	--	--	--	--	0.0E+00	na	--
Lead	0	5.1E+02	5.8E+01	na	--	5.1E+02	5.8E+01	na	--	--	--	--	--	--	--	--	--	5.1E+02	5.8E+01	na	--
Malathion	0	--	1.0E-01	na	--	--	1.0E-01	na	--	--	--	--	--	--	--	--	--	--	1.0E-01	na	--
Manganese	0	--	--	na	--	--	--	na	--	--	--	--	--	--	--	--	--	--	--	na	--
Mercury	0	1.4E+00	7.7E-01	na	5.1E-02	1.4E+00	7.7E-01	na	5.1E-02	--	--	--	--	--	--	--	--	1.4E+00	7.7E-01	na	5.1E-02
Methyl Bromide	0	--	--	na	4.0E+03	--	--	na	4.0E+03	--	--	--	--	--	--	--	--	--	--	na	4.0E+03
Methoxychlor	0	--	3.0E-02	na	--	--	3.0E-02	na	--	--	--	--	--	--	--	--	--	--	3.0E-02	na	--
Mirex	0	--	0.0E+00	na	--	--	0.0E+00	na	--	--	--	--	--	--	--	--	--	--	0.0E+00	na	--
Monochlorobenzene	0	--	--	na	2.1E+04	--	--	na	2.1E+04	--	--	--	--	--	--	--	--	--	--	na	2.1E+04
Nickel	0	4.8E+02	5.4E+01	na	4.6E+03	4.8E+02	5.4E+01	na	4.6E+03	--	--	--	--	--	--	--	--	4.8E+02	5.4E+01	na	4.6E+03
Nitrate (as N)	0	--	--	na	--	--	--	na	--	--	--	--	--	--	--	--	--	--	--	na	--
Nitrobenzene	0	--	--	na	1.9E+03	--	--	na	1.9E+03	--	--	--	--	--	--	--	--	--	--	na	1.9E+03
N-Nitrosodimethylamine[C]	0	--	--	na	8.1E+01	--	--	na	8.1E+01	--	--	--	--	--	--	--	--	--	--	na	8.1E+01
N-Nitrosodiphenylamine[C]	0	--	--	na	1.6E+02	--	--	na	1.6E+02	--	--	--	--	--	--	--	--	--	--	na	1.6E+02
N-Nitrosodi-n-propylamine[C]	0	--	--	na	1.4E+01	--	--	na	1.4E+01	--	--	--	--	--	--	--	--	--	--	na	1.4E+01
Parathion	0	6.5E-02	1.3E-02	na	--	6.5E-02	1.3E-02	na	--	--	--	--	--	--	--	--	--	6.5E-02	1.3E-02	na	--
PCB-1016	0	--	1.4E-02	na	--	--	1.4E-02	na	--	--	--	--	--	--	--	--	--	--	1.4E-02	na	--
PCB-1221	0	--	1.4E-02	na	--	--	1.4E-02	na	--	--	--	--	--	--	--	--	--	--	1.4E-02	na	--
PCB-1232	0	--	1.4E-02	na	--	--	1.4E-02	na	--	--	--	--	--	--	--	--	--	--	1.4E-02	na	--
PCB-1242	0	--	1.4E-02	na	--	--	1.4E-02	na	--	--	--	--	--	--	--	--	--	--	1.4E-02	na	--
PCB-1248	0	--	1.4E-02	na	--	--	1.4E-02	na	--	--	--	--	--	--	--	--	--	--	1.4E-02	na	--
PCB-1254	0	--	1.4E-02	na	--	--	1.4E-02	na	--	--	--	--	--	--	--	--	--	--	1.4E-02	na	--
PCB-1260	0	--	1.4E-02	na	--	--	1.4E-02	na	--	--	--	--	--	--	--	--	--	--	1.4E-02	na	--
PCB Total[C]	0	--	--	na	1.7E-03	--	--	na	1.7E-03	--	--	--	--	--	--	--	--	--	--	na	1.7E-03

Parameter	Background	Water Quality Criteria				Wasteload Allocations				Antidegradation Baseline				Antidegradation Allocations				**Most Limiting Allocations**			
(ug/l unless noted)	Conc.	Acute	Chronic	HH (PWS)	HH	Acute	Chronic	HH (PWS)	HH	Acute	Chronic	HH (PWS)	HH	Acute	Chronic	HH (PWS)	HH	**Acute**	**Chronic**	**HH (PWS)**	**HH**
Pentachlorophenol [C]	0	1.5E+01	1.1E+01	na	8.2E+01	1.5E+01	1.1E+01	na	8.2E+01	--	--	--	--	--	--	--	--	**1.5E+01**	**1.1E+01**	**na**	**8.2E+01**
Phenol	0	--	--	na	4.6E+06	--	--	na	4.6E+06	--	--	--	--	--	--	--	--	**--**	**--**	**na**	**4.6E+06**
Pyrene	0	--	--	na	1.1E+04	--	--	na	1.1E+04	--	--	--	--	--	--	--	--	**--**	**--**	**na**	**1.1E+04**
Radionuclides (pCi/l except Beta/Photon)	0	--	--	na	--	--	--	na	--	--	--	--	--	--	--	--	--	**--**	**--**	**na**	**--**
Gross Alpha Activity	0	--	--	na	1.5E+01	--	--	na	1.5E+01	--	--	--	--	--	--	--	--	**--**	**--**	**na**	**1.5E+01**
Beta and Photon Activity (mrem/yr)	0	--	--	na	4.0E+00	--	--	na	4.0E+00	--	--	--	--	--	--	--	--	**--**	**--**	**na**	**4.0E+00**
Strontium-90	0	--	--	na	8.0E+00	--	--	na	8.0E+00	--	--	--	--	--	--	--	--	**--**	**--**	**na**	**8.0E+00**
Tritium	0	--	--	na	2.0E+04	--	--	na	2.0E+04	--	--	--	--	--	--	--	--	**--**	**--**	**na**	**2.0E+04**
Selenium	0	2.0E+01	5.0E+00	na	1.1E+04	2.0E+01	5.0E+00	na	1.1E+04	--	--	--	--	--	--	--	--	**2.0E+01**	**5.0E+00**	**na**	**1.1E+04**
Silver	0	2.5E+01	--	na	--	2.5E+01	--	na	--	--	--	--	--	--	--	--	--	**2.5E+01**	**--**	**na**	**--**
Sulfate	0	--	--	na	--	--	--	na	--	--	--	--	--	--	--	--	--	**--**	**--**	**na**	**--**
1,1,2,2-Tetrachloroethane[C]	0	--	--	na	1.1E+02	--	--	na	1.1E+02	--	--	--	--	--	--	--	--	**--**	**--**	**na**	**1.1E+02**
Tetrachloroethylene[C]	0	--	--	na	8.9E+01	--	--	na	8.9E+01	--	--	--	--	--	--	--	--	**--**	**--**	**na**	**8.9E+01**
Thallium	0	--	--	na	6.3E+00	--	--	na	6.3E+00	--	--	--	--	--	--	--	--	**--**	**--**	**na**	**6.3E+00**
Toluene	0	--	--	na	2.0E+05	--	--	na	2.0E+05	--	--	--	--	--	--	--	--	**--**	**--**	**na**	**2.0E+05**
Total dissolved solids	0	--	--	na	--	--	--	na	--	--	--	--	--	--	--	--	--	**--**	**--**	**na**	**--**
Toxaphene [C]	0	7.3E-01	2.0E-04	na	7.5E-03	7.3E-01	2.0E-04	na	7.5E-03	--	--	--	--	--	--	--	--	**7.3E-01**	**2.0E-04**	**na**	**7.5E-03**
Tributyltin	0	4.6E-01	6.3E-02	na	--	4.6E-01	6.3E-02	na	--	--	--	--	--	--	--	--	--	**4.6E-01**	**6.3E-02**	**na**	**--**
1,2,4-Trichlorobenzene	0	--	--	na	9.4E+02	--	--	na	9.4E+02	--	--	--	--	--	--	--	--	**--**	**--**	**na**	**9.4E+02**
1,1,2-Trichloroethane[C]	0	--	--	na	4.2E+02	--	--	na	4.2E+02	--	--	--	--	--	--	--	--	**--**	**--**	**na**	**4.2E+02**
Trichloroethylene [C]	0	--	--	na	8.1E+02	--	--	na	8.1E+02	--	--	--	--	--	--	--	--	**--**	**--**	**na**	**8.1E+02**
2,4,6-Trichlorophenol [C]	0	--	--	na	6.5E+01	--	--	na	6.5E+01	--	--	--	--	--	--	--	--	**--**	**--**	**na**	**6.5E+01**
2-(2,4,5-Trichlorophenoxy) propionic acid (Silvex)	0	--	--	na	--	--	--	na	--	--	--	--	--	--	--	--	--	**--**	**--**	**na**	**--**
Vinyl Chloride[C]	0	--	--	na	6.1E+01	--	--	na	6.1E+01	--	--	--	--	--	--	--	--	**--**	**--**	**na**	**6.1E+01**
Zinc	0	3.1E+02	3.1E+02	na	6.9E+04	3.1E+02	3.1E+02	na	6.9E+04	--	--	--	--	--	--	--	--	**3.1E+02**	**3.1E+02**	**na**	**6.9E+04**

Notes:

1. All concentrations expressed as micrograms/liter (ug/l), unless noted otherwise
2. Discharge flow is highest monthly average or Form 2C maximum for Industries and design flow for Municipals
3. Metals measured as Dissolved, unless specified otherwise
4. "C" indicates a carcinogenic parameter
5. Regular WLAs are mass balances (minus background concentration) using the % of stream flow entered above under Mixing Information. Antidegradation WLAs are based upon a complete mix.
6. Antideg. Baseline = (0.25(WQC - background conc.) + background conc.) for acute and chronic
   = (0.1(WQC - background conc.) + background conc.) for human health
7. WLAs established at the following stream flows: 1Q10 for Acute, 30Q10 for Chronic Ammonia, 7Q10 for Other Chronic, 30Q5 for Non-carcinogens, Harmonic Mean for Carcinogens, and Annual Average for Dioxin. Mixing ratios may be substituted for stream flows where appropriate.

Metal	Target Value (SSTV)
Antimony	4.3E+03
Arsenic	9.0E+01
Barium	na
Cadmium	1.7E+00
Chromium III	1.1E+02
Chromium VI	6.4E+00
Copper	1.4E+01
Iron	na
Lead	3.5E+01
Manganese	na
Mercury	5.1E-02
Nickel	3.2E+01
Selenium	3.0E+00
Silver	1.0E+01
Zinc	1.2E+02

Note: do not use QL's lower than the minimum QL's provided in agency guidance

2006 STATS.exe

7/25/2006 9:49:41 AM

Facility = Black Swamp WWTF
Chemical = Ammonia
Chronic averaging period = 30
WLAa = 2.1 mg/l
WLAc = 0.4 mg/l
Q.L. = 0.20 mg/l
# samples/mo. = 1
# samples/wk. = 1

Summary of Statistics:

observations = 1
Expected Value = 6
Variance = 12.96
C.V. = 0.6
97th percentile daily values = 14.6005
97th percentile 4 day average = 9.98274
97th percentile 30 day average= 7.23631
< Q.L. = 0
Model used = BPJ Assumptions, type 2 data

A limit is needed based on Chronic Toxicity
Maximum Daily Limit = 0.807068037366524
Average Weekly limit = 0.807068037366524
Average Monthly LImit = 0.807068037366524

The data are:

6 mg/l	DEQ typically uses a data point of 9 for this application when assessing the need for an ammonia limitation at a municipal facility. However, in order to meet the TKN limitation of 6.0 mg/l included in this permit issuance, ammonia cannot exceed 6.0 mg/l. Therefore, for this application a data point of 6 is used.

2001 MSTRANTI

Water Quality Standards and Wasteload Allocations

5ABLS001.58

Permittee:	Black Swamp WWTF	Flows (MGD):	Design	0.6		90th % stream pH	6.29	MIX% for chronic WLA	100
Permit No.	VA0088978		7Q10	0	(chronic)	10th % stream pH		MIX% for acute WLA	100
Receiving Stream:	UT Black Swamp		1Q10		(acute)	90th % stream temp	28	- PRO default	
WQ Tier	1	(1 or 2)	30Q5		(human health - noncarcinogen)	mean effluent hardness	143	- STP 1-10-00	
Public Water Supply?	2	(1 = yes, 2 = no)	HM		(human health - carcinogen)	mean stream hardness	25	(note: 25 mg/l minimum)	

Parameter	Background	Water Quality Standard				Wasteload Allocations				Antidegradation Baseline				Antidegradation Allocations				Most Limiting Allocations			
(ug/l unless noted)	Conc.	Acute	Chronic	HH (PWS)	HH	Acute	Chronic	HH (PWS)	HH	Acute	Chronic	HH (PWS)	HH	Acute	Chronic	HH (PWS)	HH	Acute	Chronic	HH (PWS)	HH
Acenapthene	0			1.2E+03	2.7E+03			na	2.7E+03			1.2E+03	2.7E+03			na	2.7E+03			na	2.7E+03
Aldrin [C]	0	3.0E+00	3.0E-01	1.3E-03	1.4E-03	3.0E+00	3.0E-01	na	1.4E-03	3.0E+00	3.0E-01	1.3E-03	1.4E-03	3.0E+00	3.0E-01	na	1.4E-03	3.0E+00	3.0E-01	na	1.4E-03
Ammonia-N (mg/l)	0	2.4E+01	2.0E+00			2.4E+01	2.0E+00			2.4E+01	2.0E+00			2.4E+01	2.0E+00			2.4E+01	2.0E+00		
Anthracene	0			9.6E+03	1.1E+05			na	1.1E+05			9.6E+03	1.1E+05			na	1.1E+05			na	1.1E+05
Antimony	0			1.4E+01	4.3E+03			na	4.3E+03			1.4E+01	4.3E+03			na	4.3E+03			na	4.3E
Arsenic	0			5.0E+01				na				5.0E+01				na				na	
Arsenic III	0	3.6E+02	1.9E+02			3.6E+02	1.9E+02			3.6E+02	1.9E+02			3.6E+02	1.9E+02			3.6E+02	1.9E+02		
Barium	0			2.0E+03				na				2.0E+03				na				na	
Benzene [C]	0			1.2E+01	7.1E+02			na	7.1E+02			1.2E+01	7.1E+02			na	7.1E+02			na	7.1E+02
Benzo(a)anthracene [C]	0			4.4E-02	4.9E-01			na	4.9E-01			4.4E-02	4.9E-01			na	4.9E-01			na	4.9E-01
Benzo(b)fluoranthene [C]	0			4.4E-02	4.9E-01			na	4.9E-01			4.4E-02	4.9E-01			na	4.9E-01			na	4.9E-01
Benzo(k)fluoranthene [C]	0			4.4E-02	4.9E-01			na	4.9E-01			4.4E-02	4.9E-01			na	4.9E-01			na	4.9E-01
Benzo(a)pyrene [C]	0			4.4E-02	4.9E-01			na	4.9E-01			4.4E-02	4.9E-01			na	4.9E-01			na	4.9E-01
Bromoform [C]	0			4.4E+01	3.6E+03			na	3.6E+03			4.4E+01	3.6E+03			na	3.6E+03			na	3.6E+03
Butylbenzylphthalate	0			3.0E+03	5.2E+03			na	5.2E+03			3.0E+03	5.2E+03			na	5.2E+03				5.2E+03
Cadmium	0	5.9E+00	1.5E+00			5.9E+00	1.5E+00			5.9E+00	1.5E+00			5.9E+00	1.5E+00			5.9E+00	1.5E+00		
Carbon Tetrachloride [C]	0			2.5E+00	4.5E+01			na	4.5E+01			2.5E+00	4.5E+01			na	4.5E+01			na	4.5E+01
Chlordane [C]	0	2.4E+00	4.3E-03	5.8E-03	5.9E-03	2.4E+00	4.3E-03	na	5.9E-03	2.4E+00	4.3E-03	5.8E-03	5.9E-03	2.4E+00	4.3E-03	na	5.9E-03	2.4E+00	4.3E-03	na	5.9E-03
Chloride	0	8.6E+05	2.3E+05	2.5E+05		8.6E+05	2.3E+05	na		8.6E+05	2.3E+05	2.5E+05		8.6E+05	2.3E+05	na		8.6E+05	2.3E+05	na	
TRC	0	1.9E+01	1.1E+01			1.9E+01	1.1E+01			1.9E+01	1.1E+01			1.9E+01	1.1E+01			1.9E+01	1.1E+01		
Chlorodibromomethane	0			6.9E+02	5.7E+04			na	5.7E+04			6.9E+02	5.7E+04			na	5.7E+04			na	5.7E
Chloroform [C]	0			5.7E+01	4.7E+03			na	4.7E+03			5.7E+01	4.7E+03			na	4.7E+03			na	4.7E+03
2-Chlorophenol	0			1.2E+02	4.0E+02			na	4.0E+02			1.2E+02	4.0E+02			na	4.0E+02			na	4.0E+02
Chlorpyrifos	0	8.3E-02	4.1E-02			8.3E-02	4.1E-02			8.3E-02	4.1E-02			8.3E-02	4.1E-02			8.3E-02	4.1E-02		
Chromium III	0	2.3E+03	2.8E+02			2.3E+03	2.8E+02			2.3E+03	2.8E+02			2.3E+03	2.8E+02			2.3E+03	2.8E+02		
Chromium VI	0	1.6E+01	1.1E+01			1.6E+01	1.1E+01			1.6E+01	1.1E+01			1.6E+01	1.1E+01			1.6E+01	1.1E+01		
Chrysene [C]	0			4.4E-02	4.9E-01			na	4.9E-01			4.4E-02	4.9E-01			na	4.9E-01			na	4.9E-01
Copper	0	2.5E+01	1.6E+01	1.3E+03		2.5E+01	1.6E+01	na		2.5E+01	1.6E+01	1.3E+03		2.5E+01	1.6E+01	na		2.5E+01	1.6E+01	na	
Cyanide	0	2.2E+01	5.2E+00	7.0E+02	2.2E+05	2.2E+01	5.2E+00	na	2.2E+05	2.2E+01	5.2E+00	7.0E+02	2.2E+05	2.2E+01	5.2E+00	na	2.2E+05	2.2E+01	5.2E+00	na	2.2E+05
DDD [C]	0			8.3E-03	8.4E-03			na	8.4E-03			8.3E-03	8.4E-03			na	8.4E-03			na	8.4E-03
DDE [C]	0			5.9E-03	5.9E-03			na	5.9E-03			5.9E-03	5.9E-03			na	5.9E-03			na	5.9E-03
DDT [C]	0	1.0E+00	1.0E-03	5.9E-03	5.9E-03	1.0E+00	1.0E-03	na	5.9E-03	1.0E+00	1.0E-03	5.9E-03	5.9E-03	1.0E+00	1.0E-03	na	5.9E-03	1.0E+00	1.0E-03	na	5.9E-03
Demeton	0		1.0E-01				1.0E-01				1.0E-01				1.0E-01				1.0E-01		

Parameter	Background	Water Quality Standard				Wasteload Allocations				Antidegradation Baseline				Antidegradation Allocations				Most Limiting Allocations			
(ug/l unless noted)	Conc.	Acute	Chronic	HH (PWS)	HH	Acute	Chronic	HH (PWS)	HH	Acute	Chronic	HH (PWS)	HH	Acute	Chronic	HH (PWS)	HH	Acute	Chronic	HH (PWS)	HH
Dibenz(a,h)anthracene [C]	0			4.4E-02	4.9E-01			na	4.9E-01			4.4E-02	4.9E-01			na	4.9E-01			na	4.9E-01
Dibutylphthalate	0			2.7E+03	1.2E+04			na	1.2E+04			2.7E+03	1.2E+04			na	1.2E+04			na	1.2E+04
Dichloromethane [C]	0			4.7E+01	1.6E+04			na	1.6E+04			4.7E+01	1.6E+04			na	1.6E+04			na	1.6E+04
1,2-Dichlorobenzene	0			2.7E+03	1.7E+04			na	1.7E+04			2.7E+03	1.7E+04			na	1.7E+04			na	1.7E+04
1,3-Dichlorobenzene	0			4.0E+02	2.6E+03			na	2.6E+03			4.0E+02	2.6E+03			na	2.6E+03			na	2.6E+03
1,4-Dichlorobenzene	0			4.0E+02	2.6E+03			na	2.6E+03			4.0E+02	2.6E+03			na	2.6E+03			na	2.6E+03
Dichlorobromomethane [C]	0			5.6E+00	4.6E+02			na	4.6E+02			5.6E+00	4.6E+02			na	4.6E+02			na	4.6E+02
1,2-Dichloroethane [C]	0			3.8E+00	9.9E+02			na	9.9E+02			3.8E+00	9.9E+02			na	9.9E+02			na	9.9E+02
1,1-Dichloroethylene	0			3.1E+02	1.7E+04			na	1.7E+04			3.1E+02	1.7E+04			na	1.7E+04			na	1.7E+04
2,4-Dichlorophenol	0			9.3E+01	7.9E+02			na	7.9E+02			9.3E+01	7.9E+02			na	7.9E+02			na	7.9E+
(2,4-Dichlorophenoxy) acetic acid (2,4-D)	0			7.1E+01				na				7.1E+01				na				na	
Dieldrin [C]	0	2.5E+00	1.9E-03	1.4E-03	1.4E-03	2.5E+00	1.9E-03	na	1.4E-03	2.5E+00	1.9E-03	1.4E-03	1.4E-03	2.5E+00	1.9E-03	na	1.4E-03	2.5E+00	1.9E-03	na	1.4E-03
Diethylphthalate	0			2.3E+04	1.2E+05			na	1.2E+05			2.3E+04	1.2E+05			na	1.2E+05			na	1.2E+05
Di-2-ethylhexylphthalate [C]	0			1.8E+01	5.9E+01			na	5.9E+01			1.8E+01	5.9E+01			na	5.9E+01			na	5.9E+01
2,4-Dimethylphenol	0			5.4E+02	2.3E+03			na	2.3E+03			5.4E+02	2.3E+03			na	2.3E+03			na	2.3E+03
2,4-Dinitrotoluene [C]	0			1.1E+00	9.1E+01			na	9.1E+01			1.1E+00	9.1E+01			na	9.1E+01			na	9.1E+01
Dioxin (ppq)	0			1.2E-06	1.2E-06			na	1.2E-06			1.2E-06	1.2E-06			na	1.2E-06			na	1.2E-06
Endosulfan	0	2.2E-01	5.6E-02	1.1E+02	2.4E+02	2.2E-01	5.6E-02	na	2.4E+02	2.2E-01	5.6E-02	1.1E+02	2.4E+02	2.2E-01	5.6E-02	na	2.4E+02	2.2E-01	5.6E-02	na	2.4E+02
Endrin	0	1.8E-01	2.3E-03	7.6E-01	8.1E-01	1.8E-01	2.3E-03	na	8.1E-01	1.8E-01	2.3E-03	7.6E-01	8.1E-01	1.8E-01	2.3E-03	na	8.1E-01	1.8E-01	2.3E-03	na	8.1E-01
Ethylbenzene	0			3.1E+03	2.9E+04			na	2.9E+04			3.1E+03	2.9E+04			na	2.9E+04			na	2.9E+04
Fluoranthene	0			3.0E+02	3.7E+02			na	3.7E+02			3.0E+02	3.7E+02			na	3.7E+02			na	3.7E+02
Fluorene	0			1.3E+03	1.4E+04			na	1.4E+04			1.3E+03	1.4E+04			na	1.4E+04			na	1.4E+04
Foaming Agents	0			5.0E+02				na				5.0E+02				na				na	
Guthion	0		1.0E-02				1.0E-02				1.0E-02				1.0E-02				1.0E-02		
Heptachlor [C]	0	5.2E-01	3.8E-03	2.1E-03	2.1E-03	5.2E-01	3.8E-03	na	2.1E-03	5.2E-01	3.8E-03	2.1E-03	2.1E-03	5.2E-01	3.8E-03	na	2.1E-03	5.2E-01	3.8E-03	na	2.1E-0
Hexachlorocyclohexane (Lindane)	0	2.0E+00	8.0E-02	7.0E+00	2.5E+01	2.0E+00	8.0E-02	na	2.5E+01	2.0E+00	8.0E-02	7.0E+00	2.5E+01	2.0E+00	8.0E-02	na	2.5E+01	2.0E+00	8.0E-02	na	2.5E+
Hydrogen Sulfide	0		2.0E+00				2.0E+00				2.0E+00				2.0E+00				2.0E+00		
Indeno(1,2,3-cd)pyrene C	0			4.4E-02	4.9E-01			na	4.9E-01			4.4E-02	4.9E-01			na	4.9E-01			na	4.9E-01
Iron	0			3.0E+02				na				3.0E+02				na				na	
Isophorone	0			6.9E+03	4.9E+05			na	4.9E+05			6.9E+03	4.9E+05			na	4.9E+05			na	4.9E+05
Kepone	0		0.0E+00				0.0E+00				0.0E+00				0.0E+00				0.0E+00		
Lead	0	1.9E+02	2.1E+01	1.5E+01		1.9E+02	2.1E+01	na		1.9E+02	2.1E+01	1.5E+01		1.9E+02	2.1E+01	na		1.9E+02	2.1E+01	na	
Malathion	0		1.0E-01				1.0E-01				1.0E-01				1.0E-01				1.0E-01		
Manganese	0			5.0E+01				na				5.0E+01				na				na	
Mercury	0	2.4E+00	1.2E-02	5.2E-02	5.3E-02	2.4E+00	1.2E-02	na	5.3E-02	2.4E+00	1.2E-02	5.2E-02	5.3E-02	2.4E+00	1.2E-02	na	5.3E-02	2.4E+00	1.2E-02	na	5.3E-02
Methoxychlor	0		3.0E-02	4.0E+01			3.0E-02	na			3.0E-02	4.0E+01			3.0E-02	na			3.0E-02	na	
Mirex	0		0.0E+00				0.0E+00				0.0E+00				0.0E+00				0.0E+00		
Monochlorobenzene	0			6.8E+02	2.1E+04			na	2.1E+04			6.8E+02	2.1E+04			na	2.1E+04			na	2.1E+04

Parameter	Background	Water Quality Standard				Wasteload Allocations				Antidegradation Baseline				Antidegradation Allocations				Most Limiting Allocations			
(ug/l unless noted)	Conc.	Acute	Chronic	HH (PWS)	HH	Acute	Chronic	HH (PWS)	HH	Acute	Chronic	HH (PWS)	HH	Acute	Chronic	HH (PWS)	HH	Acute	Chronic	HH (PWS)	HH
Nickel	0	2.5E+02	2.8E+01	6.1E+02	4.6E+03	2.5E+02	2.8E+01	na	4.6E+03	2.5E+02	2.8E+01	6.1E+02	4.6E+03	2.5E+02	2.8E+01	na	4.6E+03	2.5E+02	2.8E+01	na	4.6E+03
Nitrate (as N)	0			1.0E+04				na				1.0E+04				na				na	
Nitrobenzene	0			1.7E+01	1.9E+03			na	1.9E+03			1.7E+01	1.9E+03			na	1.9E+03			na	1.9E+03
Parathion	0	6.5E-02	1.3E-02			6.5E-02	1.3E-02			6.5E-02	1.3E-02			6.5E-02	1.3E-02			6.5E-02	1.3E-02		
PCB-1016 [c]	0		1.4E-02	4.4E-04	4.5E-04		1.4E-02	na	4.5E-04		1.4E-02	4.4E-04	4.5E-04		1.4E-02	na	4.5E-04		1.4E-02	na	4.5E-04
PCB-1221 [c]	0		1.4E-02	4.4E-04	4.5E-04		1.4E-02	na	4.5E-04		1.4E-02	4.4E-04	4.5E-04		1.4E-02	na	4.5E-04		1.4E-02	na	4.5E-04
PCB-1232 [c]	0		1.4E-02	4.4E-04	4.5E-04		1.4E-02	na	4.5E-04		1.4E-02	4.4E-04	4.5E-04		1.4E-02	na	4.5E-04		1.4E-02	na	4.5E-04
PCB-1242 [c]	0		1.4E-02	4.4E-04	4.5E-04		1.4E-02	na	4.5E-04		1.4E-02	4.4E-04	4.5E-04		1.4E-02	na	4.5E-04		1.4E-02	na	4.5E-04
PCB-1248 [c]	0		1.4E-02	4.4E-04	4.5E-04		1.4E-02	na	4.5E-04		1.4E-02	4.4E-04	4.5E-04		1.4E-02	na	4.5E-04		1.4E-02	na	4.5E-04
PCB-1254 [c]	0		1.4E-02	4.4E-04	4.5E-04		1.4E-02	na	4.5E-04		1.4E-02	4.4E-04	4.5E-04		1.4E-02	na	4.5E-04		1.4E-02	na	4.5E
PCB-1260 [c]	0		1.4E-02	4.4E-04	4.5E-04		1.4E-02	na	4.5E-04		1.4E-02	4.4E-04	4.5E-04		1.4E-02	na	4.5E-04		1.4E-02	na	4.5E-04
Pentachlorophenol [c]	0	8.0E-03	5.0E-03	2.8E+00	8.2E+01	8.0E-03	5.0E-03	na	8.2E+01	8.0E-03	5.0E-03	2.8E+00	8.2E+01	8.0E-03	5.0E-03	na	8.2E+01	8.0E-03	5.0E-03	na	8.2E+01
Phenol	0			2.1E+04	4.6E+06			na	4.6E+06			2.1E+04	4.6E+06			na	4.6E+06			na	4.6E+06
Pyrene	0			9.6E+02	1.1E+04			na	1.1E+04			9.6E+02	1.1E+04			na	1.1E+04			na	1.1E+04
Radionuclides (pCi/l except Beta/Photon)	0																				
Gross Alpha Activity	0			1.5E+01	1.5E+01			na	1.5E+01			1.5E+01	1.5E+01			na	1.5E+01			na	1.5E+01
Beta and Photon Activity	0			4.0E+00	4.0E+00			na	4.0E+00			4.0E+00	4.0E+00			na	4.0E+00			na	4.0E+00
Strontium-90	0			8.0E+00	8.0E+00			na	8.0E+00			8.0E+00	8.0E+00			na	8.0E+00			na	8.0E+00
Tritium	0			2.0E+04	2.0E+04			na	2.0E+04			2.0E+04	2.0E+04			na	2.0E+04			na	2.0E+04
Selenium	0	2.0E+01	5.0E+00	1.7E+02	1.1E+04	2.0E+01	5.0E+00	na	1.1E+04	2.0E+01	5.0E+00	1.7E+02	1.1E+04	2.0E+01	5.0E+00	na	1.1E+04	2.0E+01	5.0E+00	na	1.1E+04
Silver	0	7.5E+00				7.5E+00				7.5E+00				7.5E+00				7.5E+00			
Sulfate	0			2.5E+05				na				2.5E+05				na				na	
Tetrachloroethylene	0			3.2E+02	3.5E+03			na	3.5E+03			3.2E+02	3.5E+03			na	3.5E+03			na	3.5E+03
Toluene	0			6.8E+03	2.0E+05			na	2.0E+05			6.8E+03	2.0E+05			na	2.0E+05			na	2.0E+05
Total dissolved solids	0			5.0E+05				na				5.0E+05				na				na	
Toxaphene [c]	0	7.3E-01	2.0E-04	7.3E-03	7.3E-03	7.3E-01	2.0E-04	na	7.3E-03	7.3E-01	2.0E-04	7.3E-03	7.3E-03	7.3E-01	2.0E-04	na	7.3E-03	7.3E-01	2.0E-04	na	7.3E
1,2,4-Trichlorobenzene	0			2.6E+02	9.5E+02			na	9.5E+02			2.6E+02	9.5E+02			na	9.5E+02			na	9.5E+02
Trichloroethylene [c]	0			2.7E+01	8.1E+02			na	8.1E+02			2.7E+01	8.1E+02			na	8.1E+02			na	8.1E+02
2,4,6-Trichlorophenol [c]	0			2.1E+01	6.5E+01			na	6.5E+01			2.1E+01	6.5E+01			na	6.5E+01			na	6.5E+01
2-(2,4,5-Trichlorophenoxy) propionic acid (Silvex)	0			5.0E+01				na				5.0E+01				na				na	
Tributyltin	0	4.6E-01	2.6E-02			4.6E-01	2.6E-02			4.6E-01	2.6E-02			4.6E-01	2.6E-02			4.6E-01	2.6E-02		
Vinyl Chloride	0			2.0E+01	5.3E+03			na	5.3E+03			2.0E+01	5.3E+03			na	5.3E+03			na	5.3E+03
Zinc	0	1.6E+02	1.4E+02	5.0E+03		1.6E+02	1.4E+02	na		1.6E+02	1.4E+02	5.0E+03		1.6E+02	1.4E+02	na		1.6E+02	1.4E+02	na	

[c] = carcinogenic

Regular WLA = [WQS((%MIX/100)(stream flow) + design flow) - (streamflow)(background conc.)]/design flow

Antideg. Baseline = (0.25(WQS - background conc.) + bacground conc.) for acute and chronic

= (0.1(WQS - background conc.) + background conc.) for human health

Antideg. WLA = [Baseline(stream flow + design flow) - (stream flow)(background conc.)]/design flow

= data entry cells

= protected cells

Metal	Target Value (SSTV)
Antimony	4.3E+03
Arsenic	na
Arsenic III	1.1E+02
Barium	na
Cadmium	9.0E-01
Chromium III	1.7E+02
Chromium VI	6.4E+00
Copper	9.6E+00
Iron	na
Lead	1.3E+01
Manganese	na
Mercury	7.2E-03
Nickel	1.7E+01
Selenium	3.0E+00
Silver	3.0E+00
Zinc	6.3E+01

Note: do not use QL's lower than the minimum QL's provided in agency guidance

All possible acute and chronic criteria (in mg/l) have been calculated:
Program enters the applicable set of criteria in K149 and K155.

		unionized	total	NH3-N
Acute Criteria:	24.4648			
When pH > 8.0:		0.4518282	330.54213	271.706
When pH < 8.0:		0.0406833	29.762492	24.4648
Chronic Criteria:	2.00771			
When pH > 8.0:		0.1029808	75.337237	61.9272
When 7.7 < pH < 8.0:		0.0092725	6.783474	5.57602
When pH < 7.7:		0.0033387	2.4424655	2.00771

	Regular WLA	Antideg. WLA
Eff. 7Q10	0	0
Eff. 1Q10	0	0
Acute hardness	143	143.0000
Chronic Hardness	143	143.0000

2001 STATS.exe

Analysis of the Black Swamp WWTF effluent data for zinc
Averaging period for standard = 4 days

The statistics for zinc are:

Number of values	=	1
Quantification level	=	10
Number < quantification	=	0
Expected value	=	300
Variance	=	32400.01
C.V.	=	.6
97th percentile	=	730.0254
Statistics used	=	Reasonable potential assumptions - Type 2 data

The WLAs for zinc are:

Acute WLA	=	160
Chronic WLA	=	140
Human Health WLA	=	----

Limits are based on acute toxicity and 1 samples/month, 1 samples/week

Maximum daily limit	=	160
Average weekly limit	=	160
Average monthly limit	=	160

Note: The maximum daily limit applies to industrial dischargers
The average weekly limit applies to POTWs
The average monthly limit applies to both.

The Data are
300

Analysis of the Black Swamp WWTF effluent data for copper
Averaging period for standard = 4 days

The statistics for copper are:

Number of values	=	1
Quantification level	=	1
Number < quantification	=	0
Expected value	=	20
Variance	=	144
C.V.	=	.6
97th percentile	=	48.66835
Statistics used	=	Reasonable potential assumptions - Type 2 data

The WLAs for copper are:

Acute WLA	=	25
Chronic WLA	=	16
Human Health WLA	=	----

Limits are based on chronic toxicity and 1 samples/month, 1 samples/week

Maximum daily limit	=	23.4012
Average weekly limit	=	23.4012
Average monthly limit	=	23.4012

Note: The maximum daily limit applies to industrial dischargers
The average weekly limit applies to POTWs
The average monthly limit applies to both.

The Data are
20

Attachment G

Government Coordination:

VDH-ODW
DCR
VDGIF
USFWS

RECEIVED
JUL 01 2011
PRO

COMMONWEALTH of VIRGINIA

Karen Remley, MD, MBA, FAAP
State Health Commissioner

J.Wesley Kleene, PhD, PE
Director, Office of Drinking Water

DEPARTMENT OF HEALTH
OFFICE OF DRINKING WATER
Southeast Virginia Field Office

830 Southampton Avenue
Suite 2058
Norfolk, VA 23510
Phone (757) 683-2000
Fax (757) 683-2007

MEMORANDUM

TO: Emilee Carpenter
Water Permit Writer
Department of Environmental Quality – Piedmont Regional Office

DATE: JUN 29 2011

FROM: Daniel B. Horne, PE
Engineering Field Director DBH

CITY/COUNTY: Sussex

PROJECT TYPE: ☐ New ☑ Renewal or Revision

☑ VPDES ☐ VPA ☐ VWPP ☐ JPA ☐ Other: _____

☑ Number: VA0088978

OWNER/APPLICANT: Sussex Service Authority

PROJECT: Black Swamp WWTP

☐ There are no public water supply raw water intakes located within 15 miles downstream or within one tidal cycle upstream of the existing project.

☑ The raw water intake for the City of Norfolk waterworks is located at Courtland, approximately 29 miles downstream of the discharge. This should be a sufficient distance to minimize the impacts of the discharge.

☐ The raw water intake for the _____ waterworks is located _____ miles [downstream/upstream (within one tidal cycle)] of the discharge.

☐ Please forward a copy of the Draft Permit for our review and comment.

☐ Comments:

Prepared by: Kendra Hardy
Kendra Hardy
District Engineer

pc: V.D.H. - Office of Drinking Water, Field Services Engineer
Ms. Kristen M. Lentz, PE, Director of Utilities, City of Norfolk

R:\DIST19\Sussex\GENERAL\Black Swamp WWTP VPDES Jun2011.doc

Carpenter, Emilee (DEQ)

From: Carpenter, Emilee (DEQ)
Sent: Wednesday, August 24, 2011 6:14 PM
To: Cason, Gladys (DGIF); 'cindy_kane@fws.gov'
Subject: VA0088978- Reissuance T&E Coordination
Attachments: VA0088978 DGIF.doc; Att2_VaFWIS_report_search.pdf; Att2_ VA0088978.doc

Cindy and Gladys:

Please find the attached coordination form regarding the subject permit reissuance. This is an existing discharge with no changes proposed for the 2011 reissuance. The facility discharges to an intermittent stream, so a mixing zone is not permitted.

If you have any questions, please don't hesitate to contact me.

Best,

Emilee C. Carpenter
Water Permit Writer, Senior
Piedmont Regional Office
Department of Environmental Quality

emilee.carpenter@deq.virginia.gov
t: 804/527-5072
f: 804/527-5106

VIRGINIA DEPARTMENT OF ENVIRONMENTAL QUALITY	**VPDES PERMITS** **Threatened and Endangered Species Coordination**
To: ☒ DGIF, Environmental Review Coordinator ☐ DCR ☒ USFWS, T/E Review Coordinator **From:** Emilee Carpenter, PRO	**Date Sent:** July 12, 2011 **Permit Number:** VA0088978
Facility Name: Black Swamp Regional Wastewater Treatment Facility **Contact:** Robert Gunnell, Director, Sussex County Service Authority **Phone:** (804) 834-8930 **Address:** 4385 Beef Steak Road Waverly, Virginia 23890	**Location:** Sussex County **USGS Quadrangle:** 68-C, Disputanta South Quad **Latitude/Longitude:** 37° 3' 14.2", -77° 8' 23.5" **Receiving Stream:** Unnamed Tributary to Black Swamp **Receiving Stream Flow Statistics used for Permit:** 0.600 MGD design capacity
Effluent Characteristics and Max Daily Flow: See Attachment 1.	**Species Search Results (or attach database report and map):** See Attachment 2.

Attach draft permit effluent limits page if available or attach existing effluent limits page (make sure it is clear in your email which one it is – draft current or existing).

DGIF email: projectreview@dgif.virginia.gov
USFWS email: cindy_kane@fws.gov
DCR: If Natural Heritage Data Explorer (NHDE) has the needed information DCR does not need this form. If you have additional information you wish to add, you may do so in the comments field on the NHDE form. DCR will contact you directly if they need more information.

Virginia Department of Game and Inland Fisheries

6/22/2011 1:02:56 PM

Fish and Wildlife Information Service

VaFWIS Search Report Compiled on 6/22/2011, 1:02:56 PM

Help

Known or likely to occur within a **2 mile radius around point null**
(at 37,03,14.2 -77,08,23.5)
in **183 Sussex County, VA**

View Map of Site Location

154 Known or Likely Species ordered by Status Concern for Conservation
(displaying first 20) (9 species with Status* or Tier I** or Tier II**)

BOVA Code	Status*	Tier**	Common Name	Scientific Name	Confirmed	Database(s)
010214	FESE	I	Logperch, Roanoke	Percina rex	Potential	BOVA,Habitat,HU6
010347	SE	I	Sunfish, blackbanded	Enneacanthus chaetodon	Potential	BOVA,Habitat,HU6
020044	ST	II	Salamander, Mabee's	Ambystoma mabeei	Potential	BOVA,Habitat
020002	ST	II	Treefrog, barking	Hyla gratiosa		HU6
070105	FS	III	Crayfish, Chowanoke	Orconectes virginiensis		BOVA
030063	CC	III	Turtle, spotted	Clemmys guttata		BOVA,HU6
010077		I	Shiner, bridle	Notropis bifrenatus		BOVA
010174		II	Bass, Roanoke	Ambloplites cavifrons		BOVA,HU6
020063		II	Toad, oak	Anaxyrus quercicus	Potential	BOVA,Habitat,HU6
020005		III	Frog, carpenter	Lithobates virgatipes		BOVA,HU6
020082		III	Siren, eastern lesser	Siren intermedia intermedia		BOVA,HU6
020022		III	Waterdog, dwarf	Necturus punctatus		BOVA,HU6
030068		III	Turtle, eastern box	Terrapene carolina carolina		BOVA,HU6
060145		III	Rainbow, notched	Villosa constricta		BOVA
010038		IV	Alewife	Alosa pseudoharengus		BOVA,HU6
010107		IV	Chubsucker, lake	Erimyzon sucetta		BOVA,HU6

010131		IV	Eel, American	Anguilla rostrata	Yes	BOVA,SppObs,HU6
010040		IV	Shad, American	Alosa sapidissima		HU6
010375		IV	Shiner, ironcolor	Notropis chalybaeus		BOVA,HU6
010179		IV	Sunfish, banded	Enneacanthus obesus		BOVA,HU6

To view **All 154 species** View 154

* FE=Federal Endangered; FT=Federal Threatened; SE=State Endangered; ST=State Threatened; FP=Federal Proposed; FC=Federal Candidate; FS=Federal Species of Concern; SC=State Candidate; CC=Collection Concern; SS=State Special Concern (obsolete January 1, 2011)

** I=VA Wildlife Action Plan - Tier I - Critical Conservation Need; II=VA Wildlife Action Plan - Tier II - Very High Conservation Need; III=VA Wildlife Action Plan - Tier III - High Conservation Need; IV=VA Wildlife Action Plan - Tier IV - Moderate Conservation Need

View Map of All Query Results from All Observation Tables

Anadromous Fish Use Streams

N/A

Impediments to Fish Passage

N/A

Colonial Water Bird Survey

N/A

Threatened and Endangered Waters

N/A

Managed Trout Streams

N/A

Bald Eagle Concentration Areas and Roosts

N/A

Bald Eagle Nests

N/A

Species Observations (5 records)

View Map of All Query Results
Species Observations

obsID	class	date_observed	Observer	N Species			View Map
				Different Species	Highest TE*	Highest Tier**	
337967	SppObs	Jan 1 1984	MDN-B-NORMAN	15		IV	Yes
338044	SppObs	Jan 1 1984	MDN-B-NORMAN	2			Yes
365012	SppObs	Dec 30 1899		1			Yes
365032	SppObs	Dec 30 1899		1			Yes
365038	SppObs	Dec 30 1899		1			Yes

Displayed 5 Species Observations

Habitat Predicted for Aquatic WAP Tier I & II Species (3 Reaches)

View Map Combined Reaches from Below of Habitat Predicted for WAP Tier I & II Aquatic Species

Stream Name	Tier Species						View Map
	Highest TE*	BOVA Code, Status*, Tier**, Common & Scientific Name					
Assamoosick Swamp (03010201)	FESE	010214	FESE	I	Logperch, Roanoke	Percina rex	Yes
(03010202)	SE	010347	SE	I	Sunfish, blackbanded	Enneacanthus chaetodon	Yes
Spring Branch (03010202)	SE	010347	SE	I	Sunfish, blackbanded	Enneacanthus chaetodon	Yes

Habitat Predicted for Terrestrial WAP Tier I & II Species (2 Species)

View Map of Combined Terrestrial Habitat Predicted for 2 WAP Tier I & II Species Listed Below

ordered by Status Concern for Conservation

BOVA Code	Status*	Tier**	Common Name	Scientific Name	View Map
020044	ST	II	Salamander, Mabee's	Ambystoma mabeei	Yes

020063		II	Toad, oak	Anaxyrus quercicus	Yes

Virginia Breeding Bird Atlas Blocks

N/A

USFWS Breeding Bird Survey Routes

N/A

Christmas Bird Count Survey

N/A

Public Holdings:

N/A

Summary of BOVA Species Associated with Cities and Counties of the Commonwealth of Virginia:

FIPS Code	City and County Name	Different Species	Highest TE	Highest Tier
183	Sussex	391	FESE	I

USGS 7.5' Quadrangles:
Disputanta South
Waverly

USGS NRCS Watersheds in Virginia:
K31 - BLACKWATER SWAMP/WARWICK SWAMP
K32 - UPPER BLACKWATER RIVER/CYPRESS SWAMP
K29 - ASSAMOOSICK SWAMP

USGS National 6th Order Watersheds Summary of Wildlife Action Plan Tier I, II, III, and IV Species:

HU6 Code	USGS 6th Order Hydrologic Unit	Different Species	Highest TE	Highest Tier
CU44	Assamoosick Swamp-Pigeon Swamp	71	FESE	I
CU54	Warwick Swamp	69	FSSE	I
CU55	Blackwater River-Spring Branch	83	FCSE	I

Terrestrial GAP project

16 GAP Habitat types identified within 8131 acres evaluated

Area	Gap Habitat Type
41%	Montane Yellow Pine
24%	Submontane Yellow Pine
15%	Recent Clear Cut
4%	Sparse Herbaceous/Row Crop
4%	Piedmont/Coastal Plain Forest Complex
3%	Tupelo/Red Maple Wet Forest
3%	Virginia Deciduous Forest Complex
2%	Herbaceous Wetland
1%	Mixed Herbaceous
1%	Mixed Class/Unknown
1%	Pasture/Low Herbaceous
<1%	Non-Vegetated (mines, barren, etc.)
<1%	Open Water
<1%	High Intensity Developed
<1%	High Herbaceous/Field Crop
<1%	Residential/Low Intensity Developed

90 Species designated "Under Represented in Protected Areas" associated with GAP Habitat Types

298 Species associated with GAP Habitat Types

Compiled on 6/22/2011, 1:02:57 PM I345266.0 report= Options searchType= R dist= 3218
poi= 37,03,14.2 -77,08,23.5

audit no. 345266 6/22/2011 1:02:57 PM Virginia Fish and Wildlife Information Service

© 1998-2011 Commonwealth of Virginia Department of Game and Inland Fisheries

Douglas W. Domenech
Secretary of Natural Resources

David A. Johnson
Director

COMMONWEALTH of VIRGINIA

DEPARTMENT OF CONSERVATION AND RECREATION

Division of Natural Heritage
217 Governor Street
Richmond, Virginia 23219-2010
(804) 786-7951

May 2, 2011

Emilee Carpenter
DEQ-PRO
4949-A Cox Road
Glen Allen, VA 23060

Re: VA0088978, Black Swamp Regional WWTP

Dear Ms. Carpenter:

The Department of Conservation and Recreation's Division of Natural Heritage (DCR) has searched its Biotics Data System for occurrences of natural heritage resources from the area outlined on the submitted map. Natural heritage resources are defined as the habitat of rare, threatened, or endangered plant and animal species, unique or exemplary natural communities, and significant geologic formations.

According to the information currently in our files, an Unnamed Tributary of Joseph Swamp 4, which has been designated by the Virginia Department of Game and Inland Fisheries (VDGIF) as a "Threatened and Endangered Species Water", is downstream of the project site. The species associated with this T & E Water is the Blackbanded sunfish (*Enneacanthus chaetodon*, G4/S1/NL/LE).

Due to the legal status of the Blackbanded sunfish, DCR recommends coordination with the VDGIF in order to ensure compliance with protected species legislation.

Under a Memorandum of Agreement established between the Virginia Department of Agriculture and Consumer Services (VDACS) and the Virginia Department of Conservation and Recreation (DCR), DCR represents VDACS in comments regarding potential impacts on state-listed threatened and endangered plant and insect species. The current activity will not affect any documented state-listed plants or insects.

Our files do not indicate the presence of any State Natural Area Preserves under DCR's jurisdiction in the project vicinity.

New and updated information is continually added to Biotics. Please contact DCR for an update on this natural heritage information if a significant amount of time passes before it is utilized.

The Virginia Department of Game and Inland Fisheries maintains a database of wildlife locations, including threatened and endangered species, trout streams, and anadromous fish waters that may contain

information not documented in this letter. Their database may be accessed from http://vafwis.org/fwis/ or contact Shirl Dressler at (804) 367-6913.

Should you have any questions or concerns, feel free to contact me at 804-692-0984. Thank you for the opportunity to comment on this project.

Sincerely,

Alli Baird

Alli Baird, LA, ASLA
Coastal Zone Locality Liaison

CC: Amy Ewing, VDGIF

Literature Cited

Johnson, R.I. 1970. The systematics and zoogeography of the Unionidae (Mullusca: Bilvava) of the southern Atlantic slope region. Bulletin Museum of Comparative Zoology vol 140(6): 362-365.

NatureServe. 2009. NatureServe Explorer: An online encyclopedia of life [web application]. Version 7.1. NatureServe, Arlington, Virginia. Available http://www.natureserve.org/explorer. (Accessed: April 27, 2010).

Ortman, A.E. 1919. A monograph of the naiades of Pennsylvania, Part 3: Systematic account of the genera and species. Mem. Carnegie Mus. 8:1-384.

Riddick, M.B. 1973. Freshwater mussels of the Pamunkey River system, Virginia. M.S. Thesis, Virginia Commonwealth University, Richmond, VA 105pp.

Williams, J.D., M.L. Warren, Jr., K.S. Cummings, J.L. Harris, and R.J. Neves. 1993. Conservation status of freshwater mussels of the United States and Canada. Fisheries 18: 6-9.

Carpenter, Emilee (DEQ)

From: Cindy_Kane@fws.gov
Sent: Tuesday, September 27, 2011 10:33 AM
To: Carpenter, Emilee (DEQ)
Subject: Fw: VA0088978- Reissuance T&E Coordination
Attachments: pic00778.gif; VA0088978 DGIF.doc; Att2_VaFWIS_report_search.pdf; Att2_ VA0088978.doc

Emilee:

At this time the Service has no comment on the VPDES permit reissuance for VA0088978 Black Swamp Regional WWTF. We understand that there is no mixing zone allowed for this discharge to an unnamed tributary to Black Swamp. There is no federally designated critical habitat in the vicinity of the project area and no federally listed species are known to occur proximal to the discharge.

Cindy

Cindy Kane
Environmental Contaminants Biologist
U.S. Fish and Wildlife Service
Virginia Field Office
6669 Short Lane
Gloucester, Virginia 23061

tel: 804 693-6694, ext. 117
fax: 804 693-9032
email: cindy_kane@fws.gov
Visit us at http://www.fws.gov/northeast/virginiafield/

The U.S. Fish and Wildlife Service's mission is, working with others, to conserve, protect and enhance fish, wildlife, and plants and their habitats for the continuing benefit of the American people.

----- Forwarded by Cindy Kane/R5/FWS/DOI on 09/27/2011 10:27 AM -----

"Carpenter, Emilee (DEQ)"
<Emilee.Carpenter@deq.virginia.gov>

08/24/2011 06:14 PM

To"Cason, Gladys (DGIF)"
<Gladys.Cason@dgif.virginia.gov>,
<cindy_kane@fws.gov>

cc

SubjectVA0088978- Reissuance T&E Coordination

Cindy and Gladys:

Please find the attached coordination form regarding the subject permit reissuance. This is an existing discharge with no changes proposed for the 2011 reissuance. The facility discharges to an intermittent stream, so a mixing zone is not permitted.

If you have any questions, please don't hesitate to contact me.

Best,

Emilee C. Carpenter
Water Permit Writer, Senior
Piedmont Regional Office
Department of Environmental Quality

emilee.carpenter@deq.virginia.gov
t: 804/527-5072
f: 804/527-5106
(See attached file: VA0088978 DGIF.doc)(See attached file: Att2_VaFWIS_report_search.pdf)(See attached file: Att2_ VA0088978.doc)

Attachment H

WET Memo

MEMORANDUM

DEPARTMENT OF ENVIRONMENTAL QUALITY
Piedmont Regional Office

4949-A Cox Road Glen Allen, VA 23060 **(804) 527- 5020**

SUBJECT: Whole Effluent Toxicity (WET) Program and WET Test Data Review:

TO: Deborah DeBiasi, CO – State Coordinator for WET and Pretreatment

FROM: Emilee Carpenter, PRO

DATE: September 19, 2011

COPIES: File

Facility Name: Black Swamp WWTP
Permit Number: VA0088978
Receiving Stream: Unnamed Tributary to Black Swamp (7Q10=0)
Facility SIC: 4952 (Municipal STP)

FACILITY DESCRIPTION

Sussex Service Authority owns and operates Black Swamp Regional Wastewater Treatment Plant in Waverly, Virginia. The Standard Industrial Classification (SIC) Code for this operation is 4952-sewerage systems.

The permit for the above referenced facility expires on December 18, 2011. The facility is permitted as a municipal minor facility with a design flow of 0.600 MGD. The facility previously accepted landfill leachate from Atlantic Waste Landfill until May 2009. In the 2006 permit reissuance, WET testing requirements were included to address toxicity potential from the leachate. The permit required that samples be taken concurrent with the acceptance of leachate and also required submittal of a reasonable estimation of the percent concentration of leachate in the final effluent at the time of sampling. Only 3 of the required tests occurred during the period in which leachate was accepted at SSA, and none of the submittals included an estimation of the percent concentration of leachate in the final effluent. In the 2011 reissuance application, the SSA indicated the pending acceptance of pretreated landfill leachate from the Atlantic Waste Landfill during the 2011 permit term. "Pretreated" leachate has not been characterized at this point. Because the WET testing performed during the 2006 permit cycle is not representative of final effluent that includes treated leachate, further WET testing is appropriate to determine the toxicity potential of the final effluent when leachate is being treated at the facility. DEQ proposes WET testing be performed contingent upon the acceptance of landfill leachate. If leachate is accepted testing will be required quarterly concurrent with leachate acceptance until such time that 10 samples have been taken or the permit expires, whichever occurs first.

FACILITY REQUIREMENTS

The current permit was reissued with an effective date of December 19, 2006. The current permit requires ten 48-hour static acute toxicity testing using *Pimephales promelas* and *Ceriodaphnia dubia* with a minimum of one month between each set of tests. Samples for these tests are to be collected only when final effluent contains treated landfill leachate. Five geometric dilutions (Controls, 6.25%, 12.5%, 25%, 50%, and 100%) with a minimum of four replicates and five organisms in each are required for each of the ten tests. An estimation of the percent concentration of landfill leachate in the final effluent at the time of the sample is collected is also required. Compliance is determined by the No Observed Adverse Effect Concentration (NOAEC) =100%

DATA SUMMARY

Outfall 001				
Test Date	**Organism**	**NOAEC**	**Leachate Accepted (Gallons)**	**Laboratory**
03/10/09-03/12/09	*Pimephales promelas*	100%	522,426 (~16,852 gpd)	James R. Reed & Associates
04/22/09-04/24/09	*Pimephales promelas*	100%	358,227 (~11,941 gpd)	James R. Reed & Associates
05/28/09-05/30/09	*Pimephales promelas*	100%	2	James R. Reed & Associates
06/30/09-07/02/09	*Pimephales promelas*	100%	0	James R. Reed & Associates
08/18/09-08/20/09	*Pimephales promelas*	100%	Not Submitted	James R. Reed & Associates
09/21/09-09/23/09	*Pimephales promelas*	100%	0	James R. Reed & Associates
10/28/09-10/30/09	*Pimephales promelas*	100%	Not Submitted	James R. Reed & Associates
12/01/09-12/03/09	*Pimephales promelas*	100%	Not Submitted	James R. Reed & Associates

Outfall 001				
Test Date	**Organism**	**NOAEC**	**Leachate Accepted (Gallons)**	**Laboratory**
03/10/09-03/12/09	*Ceriodaphnia dubia*	100%	522,426 (~16,852 gpd)	James R. Reed & Associates
04/22/09-04/24/09	*Ceriodaphnia dubia*	100%	358,227 (~11,941 gpd)	James R. Reed & Associates
05/28/09-05/30/09	*Ceriodaphnia dubia*	100%	2	James R. Reed & Associates
06/30/09-07/02/09	*Ceriodaphnia dubia*	100%	0	James R. Reed & Associates
08/18/09-08/20/09	*Ceriodaphnia dubia*	100%	Not Submitted	James R. Reed & Associates
09/21/09-09/23/09	*Ceriodaphnia dubia*	100%	0	James R. Reed & Associates
10/28/09-10/30/09	*Ceriodaphnia dubia*	100%	Not Submitted	James R. Reed & Associates
12/01/09-12/03/09	*Ceriodaphnia dubia*	100%	Not Submitted	James R. Reed & Associates

CONCLUSION AND RECOMMENDATION

Results of the whole effluent toxicity (WET) tests performed since the permit reissuance in 2006 indicate compliance with the endpoint in the current permit (NOAEC=100%). Effluent toxicity is not indicated by these results. However, because the WET testing performed during the 2006 permit cycle is not representative of final effluent that includes treated leachate, further WET testing is appropriate to determine the toxicity potential of the final effluent when leachate is being treated at the facility. DEQ proposes WET testing be performed contingent upon the acceptance of landfill leachate. If leachate is accepted testing will be required quarterly concurrent with leachate acceptance until such time that 10 samples have been taken or the permit expires, whichever occurs first. It is recommended that the acute tests assigned in the 2006 permit with *Pimephales promelas* and *Ceriodaphnia dubia* be continued with an NOAEC = 100%.

WET LANGUAGE

<u>Whole Effluent Toxicity Testing</u>

1. Biological Monitoring
   a. Upon acceptance of landfill leachate as an industrial influent and in accordance with the schedule in Part I.E.2 below, the permittee shall conduct acute toxicity tests with two species quarterly until 10 samples have been collected or the permit expires, whichever occurs first. The permittee shall collect 24-hour flow proportioned samples of final effluent from Outfall 001 and shall only collect those samples when the discharge includes treated landfill leachate. The permittee shall provide a reasonable estimation of the percent concentration of landfill leachate in the final effluent at the time of sample collection, daily logs of the volume of leachate accepted, and daily logs of overall influent volume.

      The acute multi-dilution NOAEC tests to use are:

      48-hour static tests using Ceriodaphnia dubia
      48-hour static tests using Pimephales promelas

      These acute tests are to be conducted using five geometric dilutions of effluent with a minimum of four replicates, with five organisms in each. The NOAEC (No Observed Adverse Effect Concentration), as determined by hypothesis testing, shall be reported using the schedule in E.2. Tests in which control survival is less than 90% are not acceptable.

   b. The permittee may provide additional samples to address data variability; these data shall be reported and may be included in the evaluation of effluent toxicity. Test procedures and reporting shall be in accordance with the WET testing methods cited in 40 CFR 136.3.

   c. The test dilutions shall be established such that compliance with an endpoint of an NOAEC of 100% is demonstrated.

   d. The test data will be evaluated by DEQ for reasonable potential at the conclusion of the test period. The data may be evaluated sooner if requested by the permittee, or if toxicity has been noted. Should DEQ evaluation of the data indicate that a limit is needed, the permit may be modified or, alternatively, revoked and reissued to include a WET limit and compliance schedule. Following written notification from DEQ of the need for including a WET limitation, the toxicity tests of Part I.E.1.a may be discontinued.

e. The permit may be modified or revoked and reissued to include pollutant specific limits in lieu of a WET limit should it be demonstrated that toxicity is due to specific parameters. The pollutant specific limits must control the toxicity of the effluent.

2. Reporting
The permittee shall submit a copy of each toxicity test report in accordance with the following schedule. The schedule begins the first full calendar quarter following the permittee's initial acceptance of landfill leachate. If the permittee does not accept landfill leachate as an influent during the term of the permit, the WET testing requirements in Part I.E are not applicable. Calendar quarters are defined as January-March, April- June, July-September, October-December. Reporting due dates associated with each quarter are April 10, July 10, October 10, and January 10, respectively. Tests shall be conducted quarterly concurrent with the acceptance of landfill leachate, until 10 tests have been performed or the permit expires, whichever occurs first.

Carpenter, Emilee (DEQ)

From: DeBiasi, Deborah (DEQ)
Sent: Wednesday, September 21, 2011 4:53 PM
To: Carpenter, Emilee (DEQ)
Subject: RE: VA0088978: WET Memo Review

This looks good. Thanks for sending it!

Deborah L. DeBiasi, Virginia DEQ
Office of Water Permit and Compliance Assistance Programs
Email: **Deborah.DeBiasi@deq.virginia.gov**
PH: 804-698-4028

From: Carpenter, Emilee (DEQ)
Sent: Monday, September 19, 2011 1:06 PM
To: DeBiasi, Deborah (DEQ)
Subject: RE: VA0088978: WET Memo Review

Hi Deborah-

Sorry for the delay in getting back with you. I intended to be in touch last Friday, but spent a little time looking in to the 2 gallon leachate acceptance reported for May 2009. There is a metered direct connection b/w Atlantic Waste and Black Swamp. According to the meter records, 2 gallons were recorded in May, but they probably didn't reach the treatment facility. Because there is a direct connection, I did not include the recommendation to request "time of leachate acceptance." I did however, revise that language to request leachate volume and overall influent volume daily logs. Please let me know if you have further comments.

Thanks,

Emilee C. Carpenter
Water Permit Writer, Senior
Piedmont Regional Office
Department of Environmental Quality

emilee.carpenter@deq.virginia.gov
t: 804/527-5072
f: 804/527-5106

From: DeBiasi, Deborah (DEQ)
Sent: Friday, September 09, 2011 11:34 AM
To: Carpenter, Emilee (DEQ)
Subject: RE: VA0088978: WET Memo Review

I put comments in red/blue colored font. Let me know if you have any questions on anything I wrote. Good job, by the way!

Deborah L. DeBiasi, Virginia DEQ
Office of Water Permit and Compliance Assistance Programs
Email: **Deborah.DeBiasi@deq.virginia.gov**
PH: 804-698-4028

From: Carpenter, Emilee (DEQ)
Sent: Thursday, September 08, 2011 10:57 AM
To: DeBiasi, Deborah (DEQ)
Subject: FW: VA0088978: WET Memo Review

Hey Deborah-

Just wanted to make sure that this request didn't get lost in the storm chaos.

Hope all's well.

Emilee C. Carpenter
Water Permit Writer, Senior
Piedmont Regional Office
Department of Environmental Quality

emilee.carpenter@deq.virginia.gov
t: 804/527-5072
f: 804/527-5106

From: Carpenter, Emilee (DEQ)
Sent: Thursday, August 25, 2011 6:06 PM
To: DeBiasi, Deborah (DEQ)
Subject: VA0088978: WET Memo Review

Hi Deborah-

Attached is the WET memo for the subject facility. Please let me know if you have any questions/comments.

Thanks,

Emilee C. Carpenter
Water Permit Writer, Senior
Piedmont Regional Office
Department of Environmental Quality

emilee.carpenter@deq.virginia.gov
t: 804/527-5072
f: 804/527-5106

Virginia DEQ
Deborah L. DeBiasi
804-698-4028 dldebiasi@deq.virginia.gov

Spreadsheet for determination of WET test endpoints or WET limits

Excel 97
Revision Date: 01/10/05
File: WETLIM10.xls
(MIX.EXE required also)

Acute Endpoint/Permit Limit — **Use as LC_{50} in Special Condition, as TUa on DMR**

ACUTE	100% =	NOAEC	LC_{50} =	NA	% Use as	NA	TUa
ACUTE WLAa		0.3					

Note: Inform the permittee that if the mean of the data exceeds this TUa: 1.0 a limit may result using WLA.EXE

Chronic Endpoint/Permit Limit — **Use as NOEC in Special Condition, as TUc on DMR**

CHRONIC	1.462574684	TU_c	NOEC =	69	% Use as	1.44	TU_c
BOTH*	3.000000074	TU_c	NOEC =	34	% Use as	2.94	TU_c
AML	1.462574684	TU_c	NOEC =	69	% Use as	1.44	TU_c

ACUTE WLAa,c	3	
CHRONIC WLAc	1	

Note: Inform the permittee that if the mean of the data exceeds this TUc: 1.0 a limit may result using WLA.EXE

* Both means acute expressed as chronic

Enter data in the cells with blue type:

Entry Date:	08/25/11	
Facility Name:	Black Swamp WWTF	
VPDES Number:	VA0088978	
Outfall Number:	1	
Plant Flow:	0.6	MGD
Acute 1Q10:	0	MGD
Chronic 7Q10:	0	MGD

% Flow to be used from MIX.EXE

Acute	100	%
Chronic	100	%

Difuser /modeling study?

Enter Y/N N
Acute :1
Chronic :1

Are data available to calculate CV? (Y/N)	N	(Minimum of 10 data points, same species, needed) — Go to Page 2
Are data available to calculate ACR? (Y/N)	N	(NOEC<LC50, do not use greater/less than data) — Go to Page 3

IWC_a	100	%	Plant flow/plant flow + 1Q10
IWC_c	100	%	Plant flow/plant flow + 7Q10
Dilution, acute	1		100/IWCa
Dilution, chronic	1		100/IWCc
WLA_a	0.3		Instream criterion (0.3 TUa) X's Dilution, acute
WLA_c	1		Instream criterion (1.0 TUc) X's Dilution, chronic
$WLA_{a,c}$	3		ACR X's WLA_a - converts acute WLA to chronic units
ACR -acute/chronic ratio	10		LC50/NOEC (Default is 10 - if data are available, use tables Page 3)
CV-Coefficient of variation	0.6		Default of 0.6 - if data are available, use tables Page 2)
Constants eA	0.4109447		Default = 0.41
eB	0.6010373		Default = 0.60
eC	2.4334175		Default = 2.43
eD	2.4334175		Default = 2.43 (1 samp)

NOTE: If the IWCa is >33%, specify the NOAEC = 100% test/endpoint for use

No. of samples 1

****The Maximum Daily Limit is calculated from the lowest LTA, X's eC. The LTAa,c and MDL using it are driven by the ACR.**

$LTA_{a,c}$	1.2328341	WLAa,c X's eA						
LTA_c	0.6010373	WLAc X's eB				Rounded NOEC's		%
MDL** with $LTA_{a,c}$	3.000000074	TU_c	NOEC =	33.333333	(Protects from acute/chronic toxicity)	NOEC =	34	%
MDL** with LTA_c	1.462574684	TU_c	NOEC =	68.372577	(Protects from chronic toxicity)	NOEC =	69	%
AML with lowest LTA	1.462574684	TU_c	NOEC =	68.372577	Lowest LTA X's eD	NOEC =	69	

IF ONLY ACUTE ENDPOINT/LIMIT IS NEEDED, CONVERT MDL FROM TU_c to TU_a

						Rounded LC50's		%
MDL with $LTA_{a,c}$	0.300000007	TU_a	LC50 =	333.333325	% Use NOAEC=100%	LC50 =	NA	%
MDL with LTA_c	0.146257468	TU_a	LC50 =	683.725769	% Use NOAEC=100%	LC50 =	NA	

Virginia DEQ
Deborah L. DeBiasi
804-698-4028 dldebiasi@deq.virginia.gov

Page 2 - Follow the directions to develop a site specific CV (coefficient of variation)

IF YOU HAVE AT LEAST 10 DATA POINTS THAT ARE QUANTIFIABLE (NOT "<" OR ">") FOR A SPECIES, ENTER THE DATA IN EITHER COLUMN "G" (VERTEBRATE) OR COLUMN "J" (INVERTEBRATE). THE 'CV' WILL BE PICKED UP FOR THE CALCULATIONS BELOW. THE DEFAULT VALUES FOR eA, eB, AND eC WILL CHANGE IF THE 'CV' IS ANYTHING OTHER THAN 0.6.

Coefficient of Variation for effluent tests

CV = 0.6 (Default 0.6)

δ^2 = 0.3074847

δ = 0.554513029

Using the log variance to develop eA
(P. 100, step 2a of TSD)

Z = 1.881 (97% probability stat from table

A = -0.88929666

eA = 0.410944686

Using the log variance to develop eB
(P. 100, step 2b of TSD)

δ_4^2 = 0.086177696

δ_4 = 0.293560379

B = -0.50909823

eB = 0.601037335

Using the log variance to develop eC
(P. 100, step 4a of TSD)

δ^2 = 0.3074847

δ = 0.554513029

C = 0.889296658

eC = 2.433417525

Using the log variance to develop eD
(P. 100, step 4b of TSD)

n = 1 This number will most likely stay as "1", for 1 sample/month.

δ_n^2 = 0.3074847

δ_n = 0.554513029

D = 0.889296658

eD = 2.433417525

	Vertebrate IC_{25} Data or LC_{50} Data **********	LN of data		Invertebrate IC_{25} Data or LC_{50} Data **********	LN of data
1			1	0	
2			2		
3			3		
4			4		
5			5		
6			6		
7			7		
8			8		
9			9		
10			10		
11			11		
12			12		
13			13		
14			14		
15			15		
16			16		
17			17		
18			18		
19			19		
20			20		
St Dev	NEED DATA	NEED DATA	St Dev	NEED DATA	NEED DATA
Mean	0	0	Mean	0	0
Variance	0	0.000000	Variance	0	0.000000
CV	0		CV	0	

Virginia DEQ
Deborah L. DeBiasi
804-698-4028 dldebiasi@deq.virginia.gov

Page 3 - Follow directions to develop a site specific ACR (Acute to Chronic Ratio)

To determine Acute/Chronic Ratio (ACR), insert usable data below. Usable data is defined as valid paired test results, acute and chronic, tested at the same temperature, same species. The chronic NOEC must be less than the acute LC_{50}, since the ACR divides the LC_{50} by the NOEC. LC_{50}'s >100% should not be used.

Table 1. ACR using Vertebrate data

Set #	LC_{50}	NOEC	Test ACR	Logarithm	Geomean	Antilog	ACR to Use
1	#N/A	#N/A	#N/A	#N/A	#N/A	#N/A	NO DATA
2	#N/A	#N/A	#N/A	#N/A	#N/A	#N/A	NO DATA
3	#N/A	#N/A	#N/A	#N/A	#N/A	#N/A	NO DATA
4	#N/A	#N/A	#N/A	#N/A	#N/A	#N/A	NO DATA
5	#N/A	#N/A	#N/A	#N/A	#N/A	#N/A	NO DATA
6	#N/A	#N/A	#N/A	#N/A	#N/A	#N/A	NO DATA
7	#N/A	#N/A	#N/A	#N/A	#N/A	#N/A	NO DATA
8	#N/A	#N/A	#N/A	#N/A	#N/A	#N/A	NO DATA
9	#N/A	#N/A	#N/A	#N/A	#N/A	#N/A	NO DATA
10	#N/A	#N/A	#N/A	#N/A	#N/A	#N/A	NO DATA
				ACR for vertebrate data:			0

Table 1. Result:	Vertebrate ACR	0
Table 2. Result:	Invertebrate ACR	0
	Lowest ACR	Default to 10

Table 2. ACR using Invertebrate data

Set #	LC_{50}	NOEC	Test ACR	Logarithm	Geomean	Antilog	ACR to Use
1	#N/A	#N/A	#N/A	#N/A	#N/A	#N/A	NO DATA
2	#N/A	#N/A	#N/A	#N/A	#N/A	#N/A	NO DATA
3	#N/A	#N/A	#N/A	#N/A	#N/A	#N/A	NO DATA
4	#N/A	#N/A	#N/A	#N/A	#N/A	#N/A	NO DATA
5	#N/A	#N/A	#N/A	#N/A	#N/A	#N/A	NO DATA
6	#N/A	#N/A	#N/A	#N/A	#N/A	#N/A	NO DATA
7	#N/A	#N/A	#N/A	#N/A	#N/A	#N/A	NO DATA
8	#N/A	#N/A	#N/A	#N/A	#N/A	#N/A	NO DATA
9	#N/A	#N/A	#N/A	#N/A	#N/A	#N/A	NO DATA
10	#N/A	#N/A	#N/A	#N/A	#N/A	#N/A	NO DATA
				ACR for vertebrate data:			0

Convert LC_{50}'s and NOEC's to Chronic TU's for use in WLA.EXE

Table 3. **ACR used: 10**

	Enter LC_{50}	TUc	Enter NOEC	TUc
1		NO DATA		NO DATA
2		NO DATA		NO DATA
3		NO DATA		NO DATA
4		NO DATA		NO DATA
5		NO DATA		NO DATA
6		NO DATA		NO DATA
7		NO DATA		NO DATA
8		NO DATA		NO DATA
9		NO DATA		NO DATA
10		NO DATA		NO DATA
11		NO DATA		NO DATA
12		NO DATA		NO DATA
13		NO DATA		NO DATA
14		NO DATA		NO DATA
15		NO DATA		NO DATA
16		NO DATA		NO DATA
17		NO DATA		NO DATA
18		NO DATA		NO DATA
19		NO DATA		NO DATA
20		NO DATA		NO DATA

If WLA.EXE determines that an acute limit is needed, you need to convert the TUc answer you get to TUa and then an LC50, enter it here: NO DATA %LC_{50}

NO DATA TUa

DILUTION SERIES TO RECOMMEND

Table 4.

	Monitoring % Effluent	Monitoring TUc	Limit % Effluent	Limit TUc
Dilution series based on data mean	100	1.0		
Dilution series to use for limit			69	1.4492754
Dilution factor to recommend:	0.5		0.8306624	
Dilution series to recommend:	100.0	1.00	100.0	1.00
	50.0	2.00	83.1	1.20
	25.0	4.00	69.0	1.45
	12.5	8.00	57.3	1.74
	6.25	16.00	47.6	2.10
Extra dilutions if needed	3.12	32.05	39.5	2.53
	1.56	64.10	32.9	3.04

Virginia DEQ
Deborah L. DeBiasi
804-698-4028 dldebiasi@deq.virginia.gov

Cell: I9
Comment:
This is assuming that the data are Type 2 data (none of the data in the data set are censored - "<" or ">").

Cell: K18
Comment: This is assuming that the data are Type 2 data (none of the data in the data set are censored - "<" or ">").

Cell: J22
Comment: Remember to change the "N" to "Y" if you have ratios entered, otherwise, they won't be used in the calculations.

Cell: C40
Comment:
If you have entered data to calculate an ACR on page 3, and this is still defaulted to "10", make sure you have selected "Y" in cell E21

Cell: C41
Comment: If you have entered data to calculate an effluent specific CV on page 2, and this is still defaulted to "0.6", make sure you have selected "Y" in cell E20

Cell: L48
Comment:
See Row 151 for the appropriate dilution series to use for these NOEC's

Cell: G62
Comment:
Vertebrates are:
Pimephales promelas
Oncorhynchus mykiss
Cyprinodon variegatus

Cell: J62
Comment:
Invertebrates are:
Ceriodaphnia dubia
Mysidopsis bahia

Cell: C117
Comment: Vertebrates are:

Pimephales promelas
Cyprinodon variegatus

Cell: M119
Comment: The ACR has been picked up from cell C34 on Page 1. If you have paired data to calculate an ACR, enter it in the tables to the left, and make sure you have a "Y" in cell E21 on Page 1. Otherwise, the default of 10 will be used to convert your acute data.

Cell: M121
Comment: If you are only concerned with acute data, you can enter it in the NOEC column for conversion and the number calculated will be equivalent to the TUa. The calculation is the same: 100/NOEC = TUc or 100/LC50 = TUa.

Cell: C138
Comment: Invertebrates are:

Ceriodaphnia dubia
Mysidopsis bahia