VPDES PERMIT PROGRAM FACT SHEET

This document gives pertinent information concerning the reissuance of the VPDES permit listed below. This permit is being processed as a minor, industrial permit. The effluent limitations contained in this permit will maintain the Water Quality Standards of 9 VAC 25-260 et seq. The industrial discharge results from the operation of a 356 megawatt combined cycle cogeneration facility consisting of 3 combustion turbines, 3 heat recovery steam generators, and 2 supplemental boilers. Fuels combusted are natural gas and #2 fuel oil to produce electrical power and process steam. Additionally, the facility has 3 above ground fuel oil storage tanks, each with a storage capacity of 1,250,000 gallons. This permit action consists of revising permit limitations, updating the permit special conditions, evaluating effluent and ambient flow data, and confirming that no toxics limits are necessary for protection of water quality.

1. **Facility Name and Location**:
   Hopewell Cogeneration Ltd. Partnership
   1114 Hercules Road
   Hopewell, Virginia 23860

   Owner / Owner Address:
   Hopewell Cogeneration Ltd. Partnership
   1990 Post Oak Boulevard, Suite 1900
   Houston, TX 77056

2. **Permit No**. VA0079502 **Expiration Date**: June 21, 2009

3. **Facility Contact**: Name: Robert Greene
   Title: Director/Plant Manager
   Telephone: 804-458-0700

4. **Application Complete Date**: 06/10/2009 **Regional Office**: PRO
   Permit Drafted By: Jeremy Kazio **Date**: September 22, 2009

   Reviewed by: Ray Jenkins Date: January 8, 2010
   Curt Linderman Date: April 23, 2010 and October 29, 2010

   Public Comment Period Dates: from: January 18, 2011 to: February 18, 2011 in the *Hopewell News*

5. **Receiving Stream Information:**

Outfall 001		**Outfall 002**	
Receiving Stream Name:	Gravelly Run	Receiving Stream Name:	UT to Gravelly Run
River Mile:	2-GRV000.88	River Mile	2-XGI000.41
Basin:	James River (Lower)	Basin	James River (Lower)
Subbasin:	NA	Subbasin:	NA
Section:	1a	Section:	1a
Class:	III	Class:	III
Special Standards:	None	Special Standards	None
7-Day, 10-Year Low Flow:	61.82 MGD*	7-Day, 10-Year Low Flow	0
1-Day, 10-Year Low Flow:*	61.82 MGD*	1-Day, 10-Year Low Flow	0
30-Day, 5-Year Low Flow:*	61.82 MGD*	30-Day, 5-Year Low Flow	0
Harmonic Mean Flow:*	61.82 MGD*	Harmonic Mean Flow:	0
Tidal:	No	Tidal:	No
On 303(d) list:	No	On 303(d) list:	No

* - Please see Section 13 (Ambient Water Quality Information) for information regarding the source of these ambient flow figures

6. **Operator License Requirements**: III

7. **Reliability Class**: N/A

8. **Permit Characterization**:

( ) Issuance
(X) Reissuance
( ) Revoke & Reissue
( ) Owner Modification
( ) Board Modification
( ) Change of Ownership/Name
Effective Date:
( ) Municipal
SIC Code(s):
(X) Industrial
SIC Code(s): 4911, 4931, 4961
( ) POTW
( ) PVOTW
(X) Private
( ) Federal
( ) State

(X) Existing Discharge
( ) Proposed Discharge
(X) Effluent Limited
(X) Water Quality Limited
( ) WET Limit
( ) Interim Limits in Permit
( ) Interim Limits in Other Document (attached)
( ) Compliance Schedule Required
( ) Site Specific WQ Criteria
( ) Variance to WQ Standards
( ) Water Effects Ratio
( ) Discharge to 303(d) Listed Segment
(X) Toxics Management Program Required
( ) Toxics Reduction Evaluation
( ) Possible Interstate Effect
(X) Storm Water Management Plan

9. **Discharge Description:** See **Attachment A** for a schematic of the wastewater system. The facility is a cogenerator that produces electricity for sale to Dominion-Virginia Power and steam for sale to Hercules Aqualon. Outfall 001 discharges a maximum monthly average flow of 1.45 MGD to Gravelly Run, based on data from this facility's monthly reporting. Contributions to outfall 001 include cooling tower blowdown (internal outfall 101), boiler blowdown, low volume wastes, stormwater collected from various drains and diked areas, gas turbine wash water, neutralization wastes, and demineralizer wastes (internal outfall 102). The maximum monthly average flows from both internal outfalls are listed in the chart below. Outfall 002 discharges an average flow of 0.069 MGD to an unnamed tributary of Gravelly Run, based on the information in CEDS. This outfall consists of stormwater runoff from various paved areas around the plant.

Outfall Number	Discharge Source	Treatment	Maximum Monthly Average Flow
001	Combined outfall	None – Discharge to Surface Water	1.45 MGD (DMR Data)
101	Cooling tower blowdown	Neutralization	0.48 MGD (DMR Data)
102	Boiler blowdown; Low volume wastes; Stormwater runoff; Demineralizer wastes; Neutralization wastes; Gas turbine wash water	Settling Neutralization Oil/water separator Ion Exchange	1.43 MGD (DMR Data)
002	Stormwater runoff	None – Discharge to Surface Water	0.069 MG average monthly flow (DMR Data)

10. **Sewage Sludge Use or Disposal**: N/A

11. **Discharge(s) Location Description**: Topo Map Name - Hopewell (99D) (See **Attachment A**)

12. **Material Storage**:

a. Above ground storage tanks containing fuel oil are located inside bermed areas. The facility has 3 above ground tanks, each rated at a storage capacity of 1.25 million gallons. This facility is regulated by the AST program.
b. Materials used in the treatment process are stored under roof.
c. Waste materials such as used motor oil are stored under roof.

13. **Ambient Water Quality Information**:

During the 2004 re-issuance of this permit, the ambient flow data for the receiving stream for Hopewell Cogeneration's Outfall 001 (Gravelly Run) was assumed to be entirely comprised of the discharge of wastewater from another upstream discharger (Honeywell International Inc. – VA0005291). In order to develop limitations and monitoring for this permit, ambient flow data were needed. The flow data for Honeywell International were compiled from DEQ records covering the previous 10 year period (1994-2004) for this facility. The lowest reported monthly average flow from each outfall (Outfall 001 & Outfall 002) over that 10 year period from 1994-2004 were singled out and then summed together. Although these two monthly average flow values did not occur in the same month, the sum of these values was assumed to be the lowest possible ambient flow of Gravelly Run at any given time.

For this 2011 permit re-issuance, staff began using the same process as explained above to obtain ambient flows for Gravelly Run. During flow data compilation, it was discovered that there was one instance during the last permit cycle in which the combined reported monthly average flow for Honeywell International, Inc. (VA0005291) dropped below the ambient low-flow of 79.04 MGD derived for the 2004 permit re-issuance for Hopewell Cogeneration. As this was one instance in which a MONTHLY AVERAGE was lower than an estimated LOW-FLOW value, staff believed that it may be plausible that the process used in the 2004 permit re-issuance for determining ambient stream flow is not as conservative as previously assumed. This is further enforced by the fact that monthly average flows were used in 2004 to determine minimum flow values.

Since Honeywell International Inc. is not required to report minimum flows, but rather monthly average and monthly maximum flow, minimum flow data was not readily available to DEQ staff in order to make a conservative ambient low-flow determination. Instead, further evaluations for determining ambient low-flows must be based on mathematically derived data. The assumption made in this evaluation is that the deviation between the reported <u>maximum</u> flow and the reported monthly average flow for Honeywell International is the same as the deviation between the monthly <u>minimum</u> flow and the reported monthly average flow. Utilizing this approach produces results in which there may have been 25 months over a ten year period in which the assumed monthly minimum flow dropped below the assumed 2004 ambient low-flow value (79.04 MGD) for Hopewell Cogeneration. Therefore, for this 2011 permit re-issuance, it must be assumed that a more conservative receiving stream ambient low-flow value for Gravelly Run is warranted.

The spreadsheet in **Attachment B** contains reported flow data for Honeywell International (VA0005291) from the December 1998 – December 2008 time period. The data were reported as Monthly Average and Monthly Maximum flows in MGD for each outfall (001 & 002). The third column under each outfall was used to calculate the deviation between the maximum reported monthly flow and the average monthly flow for each outfall. Finally, the two columns located to the right of the outfall columns were used to: 1) sum the monthly average flows from each outfall, and 2) produce an assumed minimum monthly flow value using the abovementioned assumptions.

After the assumed minimum flow values for each month were derived, the 10th percentile values of the monthly average flows, and the 90th percentile values of the deviations between the monthly average flows and the maximum weekly flows were then calculated for each outfall for the entire

10 year time range. These numbers were then used in the formula below to obtain the estimated ambient low-flow value used for the limitation evaluation for Hopewell Cogeneration's Outfall 001.

Estimated Ambient Daily Low Flow = (A - C) + (B - D)

Where:

A = 10th percentile of monthly average flow from Outfall 001
B = 10th percentile of monthly average flow from Outfall 002
C = 90th percentile of deviation between maximum and monthly average flow - Outfall 001
D = 90th percentile of deviation between maximum and monthly average flow - Outfall 002

Other ambient stream properties used to calculate wasteload allocations for Hopewell Cogeneration's Outfall 001 are also derived from DMR's and Application 2C data for Honeywell International (see **Attachment B**).

Hopewell Cogeneration's Outfall 002 discharges to an intermittent tributary of Gravelly Run and therefore the receiving stream is dry at the theoretical low flows used in permit limitation development.

14. **Antidegradation Review & Comments**: Tier 1 __X__ Tier 2 _____ Tier 3 _____

The State Water Control Board's Water Quality Standards includes an antidegradation policy (9 VAC 25-260-30). All state surface waters are provided one of three levels of antidegradation protection. For Tier 1 or existing use protection, existing uses of the water body and the water quality to protect those uses must be maintained. Tier 2 water bodies have water quality that is better than the water quality standards. Significant lowering of the water quality of Tier 2 waters is not allowed without an evaluation of the economic and social impacts. Tier 3 water bodies are exceptional waters and are so designated by regulatory amendment. The antidegradation policy prohibits new or expanded discharges into exceptional waters.

Gravelly Run is considered to be a Tier 1 water body because it is highly influenced by point source discharges. This surface water is part of Honeywell International's (VA0005291) allocated impact zone for ammonia in the James River, and therefore Tier 1 is the most appropriate designation for this water body. The UT to Gravelly Run to which Hopewell Cogenerations's Outfall 002 discharges is considered to be a Tier 1 water body due to its intermittent nature.

15. **Site Inspection**: Date: 02/04/09
Performed by: Mike Dare/Leanne Raynor (see **Attachment C**)

16. **Effluent Screening and Limitation Development**:

Outfall 001, Final Limitations and Monitoring

Maximum Monthly Average Flow: 1.45 MGD (see DMR data, **Attachment E**)

EFFLUENT CHARACTERISTICS		BASIS FOR LIMITS	DISCHARGE LIMITATIONS				MONITORING REQUIREMENTS	
			MONTHLY AVERAGE	WEEKLY AVERAGE	MINIMUM	MAXIMUM	FREQUENCY	SAMPLE TYPE
Flow (MGD)		NA	NL	NA	NA	NL	1 / Month	Estimate
Temperature (°C)		BEJ	NA	NA	NA	75	1 / Month	Immersion Stabilization
pH (SU)		4	NA	NA	6	9	1 / Month	Grab
Total Nitrogen	(mg/L)	BEJ	NL	NA	NA	NA	1 / Year	24 Hour composite
	(g/d)		NL					
Total Phosphorus	(mg/L)	BEJ	NL	NA	NA	NA	1 / Year	24 hour composite
	(g/d)		NL					
Acute 48 hr static *Ceriodaphnia dubia* – (TUa)		NA	NA	NA	NA	NL	1 / Year	24 hour composite
Acute 48 hr static *Pimephales promelas* – (TUa)		NA	NA	NA	NA	NL	1 / Year	24 hour composite
Chronic 3-brood static renewal *Ceriodaphnia dubia* – (TUc)		NA	NA	NA	NA	NL	1 / Year	24 hour composite
Chronic 7-day static renewal *Pimephales promelas* – (TUc)		NA	NA	NA	NA	NL	1 / Year	24 hour composite
Total Residual Chlorine (mg/L)		NA	NA	NA	NA	NL	1/Month	Grab

TECHNOLOGY BASED EFFLUENT LIMITATIONS		
BPT – Best Practical Technology	BAT – Best Available Technology	BCT – Best Conventional Pollutant Control Technology
NSPS – New Source Performance Standard	BEJ – Best Engineering Judgment	

WATER QUALITY BASED EFFLUENT LIMITATIONS		
1. 208 Plan	2. 303(e) Plan	3. 401 Certification
4. Water Quality Standards	5. Policy for Nutirent Enriched Waters (9 VAC 25-40-30 A.)	

Additional Information: Limitations and/or Monitoring (Outfall 001)

Temperature:
The Water Quality Standards (9 VAC 25-260-60) state that a facility's effluent must not cause more than a 3°C change in the natural temperature within a water body. Natural temperature is defined as "that temperature of a body of water due solely to natural conditions without the influence of any point-source discharge". For the purposes of this permit, Gravelly Run's ambient flow conditions are considered entirely comprised of the effluent flows from Honeywell International's Outfalls 001 & 002 (VA0005291). Therefore the temperature requirements in the Water Quality Standards do not apply to this situation.

However, due to previous permit re-issuances in which a temperature limitation has been applied, and compliance with this limitation has been met by the permittee, antibacksliding policies prevent its removal from this permit. Therefore, the following mass balance equation shows the possible temperature impact upon Gravelly Run if the maximum monthly average volume of effluent is emitted at the 2004 permit's temperature limitation of 75°C. Information for the effluent temperatures discharged from Honeywell International (VA0005291) was taken from that facility's application for their 2008 permit re-issuance. See **Attachment B** for data summary.

Lowest Reported Long Term Average Winter Temperature for Honeywell International = 23.4°C
Hopewell Cogeneration's Temperature Limitation = 75°C
Minimum Low Flow of Gravelly Run = 61.82 MGD
Hopewell Cogeneration's Maximum Monthly Average Flow (2004-2008) = 1.45 MGD

$$\frac{23.4°C * (61.82\ MGD) + 75°C * (1.45\ MGD)}{61.82\ MGD + 1.45\ MGD} = 24.6°C$$

$$\Delta T = 24.6°C - 23.4°C = \mathbf{1.2°C}$$

The above result indicates that the temperature impact from Hopewell Cogeneration's effluent will cause Gravelly Run's ambient stream temperature to rise a maximum of 1.2°C during winter at extremely low flows. The temperature limitation determined in the 2004 permit re-issuance does not violate the precedent set by the Water Quality Standards and will be carried forward to the 2011 permit re-issuance.

pH:
The pH limit is derived from 9 VAC 25-260-50 (Water Quality Standards) for discharges to Class III non-tidal waters in the Piedmont and Coastal Zones.

Total Phosphorus (TP) and Total Nitrogen (TN):
During previous permit re-issuances, the Water Quality Standards assigned Special Standards NEW-18 to the receiving water body section, designating it as a Nutrient Enriched Water (NEW). Therefore, in accordance with 9 VAC 25-40-30 A. (Policy for Nutrient Enriched Waters), a limitation for Total Phosphorus was required. For the 2011 re-issuance, the current Water Quality Standards (February 2010) have repealed the NEW designation to the receiving water body section. Therefore, in accordance with Guidance Memo 07-2008, Amendment 2 (Page 15), the former TP limitation has been removed from the 2011 permit reissuance because: a) the facility is a non-significant industrial facility; b) the limit is technology-based, so backsliding is permissible; c) a discharge to the Chesapeake Bay watershed is exempt from the 2.0 mg/L limit per 9VAC 25-40-30.D (Policy for Nutrient Enriched Waters); d) the facility has not installed nutrient control treatment; and e) the facility has not undertaken any process or site management changes in order to comply with the TP limit.

An analysis was conducted for nutrients (see **Attachment F**) during drafting of the 2011 permit. It was discovered that, although this facility does not discharge enough TP or TN annual loads to be

considered a significant discharger of nutrient pollutants, a general upward trend was observed between 2004 and 2008 for Total Phosphorus. In addition, TN loads were observed to be very close to the equivalent load which would warrant coverage under the Chesapeake Bay Watershed Nutrient General Permit. Consequently, it is recommended that monitoring for TP and TN be inserted into the 2011 permit. In consideration of the permittee's VEEP status, monitoring frequencies have been set at 1/Month for TP, and 1/Year for TN, rather than 1/Week as recommended by agency policy.

WET Monitoring:
Whole Effluent Toxicity monitoring is being carried forward from the 2004 to the 2011 permit cycle in accordance with 9 VAC 25-31-210 and 220 I. of the VPDES Permit Regulation and BEJ. The acute endpoints have become slightly more stringent for the 2011 re-issuance due to a lower assumed ambient flow in the receiving stream and slightly higher effluent flows. An evaluation was conducted using the program WETLIM10.exe in order to produce chronic and adjusted acute WLA's. The WET testing results from 2004-2008 for this facility were then compared against these WLA's using the STATS2.0.4 program. It was determined that no limitations were required (see **Attachment D** for WETLIM10 and STATS 2.0.4 printout, as well as guidance from OWP&CA)

Total Residual Chlorine (TRC):
Monitoring for TRC has been added to the 2011 re-issuance for this facility because Free Available Chlorine (FAC) is limited at internal contributing Outfall 101 in accordance with the Federal Effluent Guidelines (see Additional Information: Limitations and/or Monitoring for Outfall 101 in this section, and § 423.15.(j)(1)). The limitations for FAC at internal outfall 101 are 0.2 mg/L monthly average, and 0.5 mg/L maximum. Since there is a Water Quality Standard for TRC, and the FEG's limit FAC from a contributing outfall to this outfall, monitoring for TRC will indicate whether or not the FAC limitation is protective of Water Quality Standards and will allow for evaluation of representative data in future permit reissuances (see **Attachment F** for TRC limitation evaluation conducted on a single data point submitted with Attachment A).

Additional Information: Application 2C and Attachment A Screening (Outfall 001)

Application 2C and Attachment A:

Notes: 1) The permittee marked all parameters in application 2C as "Believed Present" with the exception of radionuclides. The permittee tested for each parameter in accordance with Form 2C requirements, including radionuclides.

2) The results of Attachment A testing were not transcribed from the laboratory reports to the Attachment A form, which was signed and stapled to the reports. All required parameters were tested for in accordance with Attachment A instructions pertaining to test method and minimum QL requirements.

3) The Attachment A form that was provided to the permittee by DEQ did not include required target values for dissolved metals. However, all QL's used by the lab were compared to the dissolved metals target values calculated for the 2011 permit re-issuance, and were found to be in compliance.

Testing results submitted by the permittee for Application 2C and Attachment A have been combined in a summary spreadsheet in **Attachment D** of this fact sheet.

Those test results which were reported above a DEQ-required QL, as well as those parameters for which test results were reported above the laboratory's QL and for which there is a Water Quality Standard, are listed below. Reported total recoverable metal concentrations for which a Water Quality Standard exists only for the dissolved form of that metal concentration were ignored.

POLLUTANTS OF CONCERN			
PARAMETER	CONCENTRATION	PARAMETER	CONCENTRATION
Dissolved Barium	66 µg/L	Total Residual Chlorine	0.13 mg/L
Dissolved Copper	8 µg/L	Nitrate	3.75 mg/L
Dissolved Iron	19 µg/L	Sulfate	2150 mg/L
Dissolved Manganese	11 µg/L	Total Dissolved Solids	2800 mg/L
Dissolved Zinc	25 µg/L	Phenol	0.04 mg/L
Bis-2-ethylhexyl phthalate	7 µg/L	Total Barium	0.218 mg/L
Chloroform	9 µg/L	Total Iron	0.175 mg/L
Ammonia	0.13 mg/L	Total Manganese	0.067 mg/L
Chlorides	254 mg/L	Total Thallium	0.006 mg/L
Foaming Agents	0.6 mg/L	Dissolved Cadmium	0.6 µg/L

A limitation evaluation begins by determining chronic and acute wasteload allocations (WLA's) using the MSTRANTI Excel Spreadsheet. MSTRANTI produces WLA's using data inputs determined by the permit writer and the Virginia Water Quality Standards (9 VAC 25-260 et. seq.). Once determined, the chronic and acute WLA's are entered into the STATS 2.0.4 computer application along with the appropriate quantification level (QL) and at least one data point. The output from the STATS 2.0.4 application will indicate the need for a permit limitation and calculate that limitation if required.

Those Pollutants of Concern evaluated using the method explained above are listed with the results of the evaluation below. See **Attachment F** for MSTRANTI and STATS 2.0.4 printouts.

MSTRANTI & STATS 2.0.4 EVALUATIONS	
Parameter	Limitation Needed?
Ammonia	NO
Cadmium	NO
Chlorides	NO
Copper	NO
Total Residual Chlorine	NO
Zinc	NO

Concentrations for parameters which do not have Aquatic Life water quality criteria are compared against any applicable Human Health criteria. Since the receiving stream to which this facility discharges is not considered a Public Water Supply (PWS) segment, only the respective "All Other Surface Waters" Human Health criteria listed in 9 VAC 25-260-140 B. were used to determine if further evaluation is required. For conservative purposes, the reported pollutant concentrations have been compared to the Human Health criteria without accounting for dilution of the facility's effluent using ambient 30Q5 or Harmonic Mean flow rates.

HUMAN HEALTH EVALUATION			
Parameter	Reported Concentration	Human Health Criteria (non-PWS)	Further Evaluation Required?
Chloroform	9 µg/L	29,000 µg/L	NO
Phenol	40 µg/L	4,600,000 µg/L	NO
Total Thallium	6 µg/L	6.3 µg/L	YES (see below)
Bis-2-ethylhexyl phthalate (di-2-Ethylhexyl Phthalate)	7 µg/L	59 µg/L	NO

All reported concentrations of those Pollutants of Concern with Human Health (non-PWS) water quality criteria are significantly lower than their respective criteria under the assumption of zero ambient flows except Thallium. Although the reported concentration for Total Thallium is less than the Human Health criteria, it was only reported to one significant digit as compared to the two significant digits required by the Human Health criteria. Therefore it may be assumed that the actual concentration may be between 0.55 – 0.64 µg/L. In order to further evaluate the potential impact of this concentration on the receiving stream, the established protocol contained in Guidance Memo 00-2011 for determining a direct comparison between a reported concentration and that WLA which will trigger assigning a Human Health water quality based limitation, has been provided in the MSTRANTI program for this outfall (see **Attachment F**). The Human Health WLA of 260 µg/L indicates that the reported Thallium concentration does not violate Water Quality Standards.

Those remaining Pollutants of Concern (Barium, Iron, Manganese, Foaming Agents, Nitrate, Sulfate, and Total Dissolved Solids) only have Human Health Criteria pertaining to discharges to receiving streams identified as a Public Water Supply segment, which does not apply in this case. Therefore, no further evaluation of these parameters is warranted.

The following table lists other parameter concentrations which were reported greater than the respective QL determined by the laboratory.

OTHER PARAMETERS REPORTED >QL				
Parameter	Reported Concentration	Further Evaluation Needed?	Reason	Notes
Sulfite (mg/L)	10	NO	1	NA
Fecal Coliform (MPN/100)	4	NO	2	14 MPN/100 mL is the WQS for discharges to shellfish waters – not applicable here.
Conductivity (µmhos/cm)	586	NO	1	NA
TSS (mg/L)	2	NO	1	NA
Phosphorus (mg/L)	0.59	NO	2	The reported concentration is below the existing limit of 2.0 mg/L at this outfall.
Organic Nitrogen (mg/L)	1.54	NO	1	With Ammonia, is part of TKN (addressed below)
TOC (mg/L)	18	NO	1	NA
Color (pcu)	15	NO	1	NA
Fluoride (mg/L)	1.02	NO	1	NA
Nitrite (mg/L)	0.022	NO	1	NA
Total Aluminum (mg/L)	0.129	NO	1	NA
Total Boron (mg/L)	0.325	NO	1	NA
Total Magnesium (mg/L)	38	NO	1	NA
Total Molybdenum (mg/L)	0.022	NO	1	NA
Titanium (mg/L)	0.005	NO	1	NA

OTHER PARAMETERS REPORTED >QL				
Parameter	Reported Concentration	Further Evaluation Needed?	Reason	Notes
Strontium-90	1.8 pCi/L	NO	1	NA
BOD (mg/L)	3	NO	1	Although these parameters are not addressed in the WQS, they have an effect on oxygen demand. The receiving stream (Gravelly Run) has not been cited as having issues regarding low dissolved oxygen. No further evaluation is warranted.
COD (mg/L)	46	NO	1	
TKN (mg/L)	1.67	NO	1	

(1) – Parameter is not addressed by current Water Quality Standards. Further numerical comparative evaluation is not feasible.
(2) – Parameter concentration was reported within acceptable levels

Outfall No.101, Final Limitations and/or Monitoring
Maximum Monthly Average Flow: 0.48 MGD (see DMR data, **Attachment E**)

EFFLUENT CHARACTERISTICS		BASIS FOR LIMITS	DISCHARGE LIMITATIONS				MONITORING REQUIREMENTS	
			MONTHLY AVERAGE	WEEKLY AVERAGE	MINIMUM	MAXIMUM	FREQUENCY	SAMPLE TYPE
Flow (MGD)		NA	NL	NA	NA	NL	1 / Month	Estimate
Chromium, Total	(mg/L)	NSPS	0.2	NA	NA	0.2	1 / Month	24 hour composite
	(g/d)		360			2300		
Zinc, Total	(mg/L)	NSPS	1.0	NA	NA	1.0	1 / Month	24 hour composite
	(g/d)		1800			11000		
Free Available Chlorine (mg/L)		NSPS	0.2	NA	NA	0.5	1 / Month	Grab
126 Priority Pollutants		NSPS	NA			Non Detect	1 / Quarter	24 hour composite

TECHNOLOGY BASED EFFLUENT LIMITATIONS		
BPT – Best Practical Technology	BAT – Best Available Technology	BCT – Best Conventional Pollutant Control Technology
NSPS – New Source Performance Standard	BEJ – Best Engineering Judgment	

WATER QUALITY BASED EFFLUENT LIMITATIONS		
1. 208 Plan	2. 303(e) Plan	3. 401 Certification
4. Water Quality Standards	5. Policy for Nutirent Enriched Waters (9 VAC 25-40-30 A.)	

Additional Information: Limitations and/or Monitoring (Outfall 101)

Free Available Chlorine:
Required by Federal Effluent Guidelines (FEG) - 40 CFR 423.15 (i)(1) (see **Attachment H**) The FEG instructs that a loading limitation for this parameter be calculated from a given concentration. Being that free chlorine volatilizes quickly and cannot accumulate under normal conditions, a concentration limitation is more stringent than a loading limit. Therefore, a loading limit has not been applied. When this facility was constructed, The New Source Performance Standards were applied to this outfall. These Standards are being carried forth to the 2011 permit re-issuance because they are the most stringent limits recommended by the FEG's for this facility type.

Total Chromium, Total Zinc, and 126 Priority Pollutants:
Required by Federal Effluent Guidelines - 40 CFR 423.15 (j)(1) (see **Attachment H**). 40 CFR 423.15(j)(3) states that, at the permitting authority's discretion, compliance with the limitations for the 126 priority pollutants may be determined by engineering calculations which demonstrate that the regulated pollutants are not detectable in the final discharge by the analytical methods listed by 40 CFR Part 136 (see **Attachment H**). This facility demonstrates via material balances that no priority pollutants are discharged because no chemicals are used that contain any of the priority pollutants. Please see **Attachment G** for "Hopewell Cogeneration Facility Study of Cooling Tower Blowdown With Respect to 126 Priority Pollutants Chromium and Zinc". The New Source Performance Standards are applied to this outfall. These Standards are being carried forth to the 2011 permit re-issuance because they are the most stringent limits recommended by the FEG's for this facility type. Total Chromium is reflected as one significant digit in order to match the underlying standard contained in the FEG's.

Loading Calculations for Total Chromium & Total Zinc Limitations:

flow MGD x $1.0X10^6$ x 3.785 L/gal x limit concentration mg/l x 1000^{-1} = mass flow rate in g/day

Maximum Monthly Average Flow: 0.48 MGD (DMR Data, **Attachment E**)
Maximum Daily Value: 3.1 MGD (DMR data, **Attachment E**)

Chromium, Total:

Monthly Average= 0.48 MGD * $1.0X10^6$ * 3.785 L/gal * 0.20 mg/L * 1000^{-1} = **360** g/day
Daily Maximum= 3.1 MGD * $1.0X10^6$ * 3.785 L/gal * 0.20 mg/L * 1000^{-1} = **2300** g/day

Zinc, Total:

Monthly Average = 0.48 MGD * $1.0X10^6$ * 3.785 L/gal * 1.0 mg/L * 1000^{-1} =**1800** g/day
Daily Maximum = 3.1 MGD * $1.0X10^6$ * 3.785 L/gal * 1.0 mg/L * 1000^{-1} = **11000** g/day

Outfall No.102 Final Limitations and/or Monitoring
Maximum Monthly Average Flow: 1.43 MGD (see DMR data, **Attachment E**)

EFFLUENT CHARACTERISTICS		BASIS FOR LIMITS	DISCHARGE LIMITATIONS				MONITORING REQUIREMENTS	
			MONTHLY AVERAGE	WEEKLY AVERAGE	MINIMUM	MAXIMUM	FREQUENCY	SAMPLE TYPE
Flow (MGD)		NA	NL	NA	NA	NL	1 / Month	Estimate
TSS	(mg/L)	NSPS	30	NA	NA	100	1 / Month	24 hour composite
	(g/d)		NL			NL		
Oil and Grease	(mg/L)	NSPS	15	NA	NA	20	1 / Month	grab
	(g/d)		NL			NL		

TECHNOLOGY BASED EFFLUENT LIMITATIONS		
BPT – Best Practical Technology	BAT – Best Available Technology	BCT – Best Conventional Pollutant Control Technology
NSPS – New Source Performance Standard	BEJ – Best Engineering Judgment	

WATER QUALITY BASED EFFLUENT LIMITATIONS		
1. 208 Plan	2. 303(e) Plan	3. 401 Certification
4. Water Quality Standards	5. Policy for Nutirent Enriched Waters (9 VAC 25-40-30 A.)	

Additional Information: Limitations and/or Monitoring (Outfall 102)

Total Suspended Solids (TSS) and Oil & Grease:
Required by Federal Effluent Guidelines - 40 CFR 423.15 (c) (see **Attachment H**)

Please note that this Outfall is influenced by storm water. In the interest of maintaining consistency with the 2004 permit, and to prevent impractical multiple loading limitations for the same parameter to account for varying flow scenarios, loading limitations for TSS and O&G have not been applied.

Outfall No.002 Final Limitations and/or Monitoring
Average Monthly Flow: 0.069 MGD (see DMR data, **Attachment E**)

EFFLUENT CHARACTERISTICS	BASIS FOR LIMITS	DISCHARGE LIMITATIONS				MONITORING REQUIREMENTS	
		MONTHLY AVERAGE	WEEKLY AVERAGE	MINIMUM	MAXIMUM	FREQUENCY	SAMPLE TYPE
Flow (MGD)	NA	NL	NA	NA	NL	1 / Quarter	Estimate
Total Recoverable Zinc (mg/L)	BEJ	NA	NA	NA	NL	1 / Quarter	grab
Total Recoverable Copper (mg/L)	BEJ	NA	NA	NA	NL	1 / Quarter	grab
Total Recoverable Iron (mg/L)	BEJ	NA	NA	NA	NL	1 / Year	grab

TECHNOLOGY BASED EFFLUENT LIMITATIONS		
BPT – Best Practical Technology	BAT – Best Available Technology	BCT – Best Conventional Pollutant Control Technology
NSPS – New Source Performance Standard	BEJ – Best Engineering Judgment	

WATER QUALITY BASED EFFLUENT LIMITATIONS		
1. 208 Plan	2. 303(e) Plan	3. 401 Certification
4. Water Quality Standards	5. Policy for Nutirent Enriched Waters (9 VAC 25-40-30 A.)	

Additional Information: Limitations and/or Monitoring (Outfall 002)

Dissolved Zinc, Dissolved Copper, and Total Iron:

Pollutants are assessed against screening criteria developed solely to identify those pollutants that should be given special emphasis during development and assessment of the Storm Water Pollution Prevention Plan (SWPPP).

Each screening criterion is established as the most stringent of either (1) two times the applicable pollutant's acute criterion, (2) the pollutant's waste load allocation, on the basis of the discharge going to a large receiving stream and utilizing conservative assumptions (i.e., Tier 2) or, where applicable, (3) the pollutant's benchmark monitoring concentration as contained in DEQ's VPDES general permit for storm water associated with industrial activity. Any storm water outfall effluent data submitted by the permittee that contained pollutants above the established screening criteria triggered the need for monitoring of that specific pollutant in Part I A of the permit for that outfall. The screening criteria are then utilized in the permit as a comparative value. Based on the above, monitoring was established for the pollutants noted in the table below. In addition, annual toxicity screening was required for these same outfalls.

The SWPPP required in Parts I D 3 & 4 of the permit is designed to reduce pollutants in storm water runoff. Quarterly monitoring for the pollutants noted in the table above and annual toxicity screening is recommended. Pollutant specific monitoring results above the established comparative value or toxicity screening which results in an LC_{50} of less than 100% effluent, will justify the need to reexamine the effectiveness of the SWPPP and any best management practices (BMPs) being utilized. The goal of the SWPPP is to reduce pollutants to the maximum extent practicable. An annual report is to be submitted to the Piedmont Regional office and shall include the data collected the previous year with an indication if the SWPPP or any BMPs were modified based on the monitoring results.

Outfall 002 discharges to a UT of Gravelly Run, which is considered to have a statistical low flow of "zero". Therefore, it is necessary to compare those toxic pollutant concentrations reported in either EPA Form 2F or prior permit monitoring results (see **Attachment E**) to 2X the acute criteria contained in 9 VAC 25-260-140 B. (February 2010 Water Quality Standards). Since the nature of Hopewell Cogeneration's business is categorized as a Duel Fuel Steam Electric Generating Facility (Sector O), the sector specific storm water requirements contained in section IN-4 of the current Permit Manual (rev.January 2010) states that Iron must be monitored and results compared to a benchmark value of 1.0 mg/L.

Dissolved Copper Criteria = WER $[e^{\{0.9422[\ln(\text{hardness})]-1.700\}}](0.960)$
Dissolved Zinc Criteria = WER $[e^{\{0.8473[\ln(\text{hardness})]+0.884\}}](0.978)$

Where:
WER = Water Effect Ratio = 1 unless determined otherwise under 9VAC 25-260-140.F
Hardness = receiving stream hardness as $CaCO_3$ in mg/L
e = base e exponential function
ln = log normal function

Since the receiving stream is dry at the theoretical low flows used in permit limitation development, storm water flow from Hopewell Cogeneration is considered to be representative of the water quality of the receiving stream. A hardness value of 25 mg/L has been used to calculate the above metals criteria because additional hardness data do not exist.

Dissolved Copper Criteria (hardness 25 mg/L)= 1 X $[e^{\{0.9422[\ln(25)]-1.700\}}]$ X (0.960) X 1000^{-1} mg/µg

= 0.0036 mg/L

Dissolved Zinc Criteria (hardness 25 mg/L) = 1 X $[e^{\{0.8473[\ln(25)]+0.884\}}]$ X (0.978) X 1000^{-1} mg/µg

= 0.036 mg/L

STORM WATER SCREENING – OUTFALL 002(1)					
Pollutant		Expected Value of Monitoring Results or Grab Testing Results	Acute Criteria (3)	2XAcute Criteria	Storm Water Management Evaluation Required?
DMR Data(2)	TR Copper (mg/L)	0.042	0.0036	0.0072	YES
	TR Zinc (mg/L)	0.404	0.036	0.072	YES
Form 2F	TR Copper (mg/L)	<0.005	0.0036	0.0072	NO
	TR Zinc (mg/L)	0.213	0.036	0.072	YES

Footnotes:

(1) Please see **Attachment E** for all data pertaining to Outfall 002. Water Quality Standards do not exist for BOD, COD, Total Nitrogen, Total Kjeldahl Nitrogen, Phosphorus (non-elemental), or Total Suspended Solids. A Human Health Standard exists for Nitrate, but only applies to discharges to receiving waters which are considered a Public Water Supply segment, which does not apply to Outfall 002. Therefore, only those reported parameters which are able to be screened according to the aforementioned method have been included in the chart above, while the remaining parameters are considered unquantifiable (i.e. don't have any comparative values) for the purposes of this evaluation.

(2) The expected value (Ex) shown for each DMR parameter above is calculated using the following formula from GM00-2011 (Type 3 Data):

$$Ex = \exp(u_y + 0.5\sigma_y^2)$$

Where: u_y = The mean of the log-transformed data

σ_y^2 = The variance of the log-transformed data

(3) Criteria based on dissolved metals

17. **Antibacksliding Statement**:

All concentration-based limits are at least as stringent as in the previous permit. Mass rate limitations for Total Chromium and Total Zinc at Outfall 101 were increased due to an increase in reported maximum monthly average and maximum daily flow. The Total Phosphorus limit of 2.0 mg/L formerly applied Outfall 001 has been removed in accordance with agency guidance (GM07-2008, Amendment 2, Pg. 15). See Item 16 of this fact sheet for more information regarding removal of this limit.

18. **Special Conditions**:

B1. Notification Levels
Rationale: Required by VPDES Permit Regulation, 9 VAC 25-31-200 A for all manufacturing, commercial, mining, and silvicultural dischargers.

B2. Operations & Maintenance Manual
Rationale: Required by Code of Virginia § 62.1-44.16; VPDES Permit Regulation, 9 VAC 25-31-190 E, and 40 CFR 122.41(e). These require proper operation and maintenance of the permitted facility. Compliance with an approved O&M manual ensures this.

B3. Licensed Operator Requirement.
Rationale: Required by VPDES Permit Regulation, 9 VAC 25-31-200 D and The Code of Virginia § 54.1-2300 et seq, Rules and Regulations for Waterworks and Wastewater Works Operators (18 VAC 160-20-10 et seq.) requires licensure of operators.

B4. Materials Handling & Storage
Rationale: 9 VAC 25-31-50 A prohibits the discharge of any wastes into State waters unless authorized by permit. Code of Virginia § 62.1-44.16 and 62.1-44.17 authorizes the Board to regulate the discharge of industrial waste or other waste.

B5. TMDL/Nutrient Reopener
Rationale: 9VAC 25-40-70.A authorizes DEQ to include technology-based annual concentration limits in the permits of facilities that have installed nutrient control equipment, whether by new construction, expansion or upgrade. 9 VAC 25-31-390 A authorizes DEQ to modify VPDES permits to promulgate amended water quality standards.

B6. Compliance Reporting
Rationale: Authorized by VPDES Permit Regulation, 9 VAC 25-31-190 J 4 and 220 I. This condition is necessary when pollutants are monitored by the permittee and a maximum level of quantification and/or a specific analytical method is required in order to assess compliance with a permit limit or to compare effluent quality with a numeric criterion. The quantification levels (QL's) for all parameters except Total Zinc and Total Chromium are based on agency standards. For Total Zinc and Total

Chromium, the FEG-based limitations were treated as WQBEL's in order to back-calculate a Long Term Average, which was then used as a QL.

B7. Oil Storage Ground Water Monitoring Reopener
Rationale: Facilities with greater than 1,000,000 gallons of regulated aboveground petroleum storage are required to monitor ground water under the Facility and Aboveground Storage Tank Regulation (9 VAC 25-91-10 et seq.). Where potential exists for ground water pollution and that regulation does not require monitoring, the VPDES permit may contain groundwater monitoring under Code of Virginia § 62.1-44.21.

B8. No Discharge of PCBs
Rationale: Required by Federal Effluent Guidelines, 40 CFR 423.15(b).

B9. Free Available Chlorine Requirement
Rationale: Required by Federal Effluent Guidelines, 40 CFR 423.15(h)(2).

B10. No Discharge of Metal Cleaning Wastes
Rationale: Required by Federal Effluent Guidelines, 40 CFR 423.15(d). No effluent containing metal cleaning wastes were indicated in EPA Form 2C. Therefore, no standards were included in the permit and the facility is not permitted to discharge these types of wastes.

B11. Alternative Monitoring for 126 Priority Pollutants, Chromium, and Zinc
Rationale: Allowed by Federal Effluent Guidelines, 40 CFR 423.15(j)(3).

B12. Treatment Works Closure Plan
Rationale: §62.1-44.19 of the State Water Control Law. This condition establishes the requirement to submit a closure plan for the wastewater treatment facility if the treatment facility is being replaced or is expected to close.

Part I.C: WET Monitoring Program
Rationale: VPDES Permit Regulation, 9 VAC 25-31-210 and 220 I, requires monitoring in the permit to provide for and assure compliance with all applicable requirements of the State Water Control Law and the Clean Water Act. WET testing requirements and language were provided by OWP&CA.

Part I.D.
1. Storm Water Management Evaluation
2. General Storm Water Special Conditions
3. General Storm Water Pollution Prevention Plan Requirements
4. Sector Specific Storm Water Requirements
5. Sector Specific Benchmark Monitoring

Rationale: VPDES Permit Regulation, 9 VAC 25-31-10 defines discharges of storm water from industrial activity in 9 industrial categories. 9 VAC 25-31-120 requires a permit for these discharges. The Storm Water Pollution Prevention Plan (SWPPP) requirements of the permit are derived from the VPDES general permit for discharges of storm water associated with industrial activity (VAR05), 9 VAC 25-151-10 et seq. VPDES Permit Regulation, 9 VAC 25-31-220 K, requires use of best management practices where applicable to control or abate the discharge of pollutants when numerical effluent limits are infeasible or the practices are necessary to achieve effluent limits or to carry out the purpose and intent of the Clean Water Act and State Water Control Law. General storm water requirements, SWPPP requirements, monitoring requirements, and toxicity screening requirements have been included in accordance with the current Permit Manual, Section IN-4, revised 2010. A SWPPP is in place for this facility.

Part II: Conditions Applicable to All Permits
Rationale: VPDES Permit Regulation, 9 VAC 25-31-190 requires all VPDES permits to contain or

specifically cite the conditions listed.

19. **NPDES Permit Rating Work Sheet**: Total Score 50 (see **Attachment I**)

20. **Changes to Permit:**

Changes to Part I.A. Effluent Limitations and Monitoring Requirements						
Outfall No.	Parameter Changed	Monitoring Requirement Changed		Effluent Limits Changed		Rationale
		From	To	From	To	
001	Total Residual Chlorine	--	1/Month	--	Monitoring Only	Added for future determination of whether the FAC limit at Outfall 101 is protective of the TRC Water Quality Standards, see Item 16 of this fact sheet for more information.
001	Total Phosphorus	1/Month - 24 hour composite	No Change	2.0 mg/L	Monitoring Only	Limitation removed in accordance with 9 VAC 25-40-30 D. Monitoring only due to an observed increasing trend resulting from nutrient evaluation (See **Attachment F** & Item 16 of this fact sheet).
				NL (kg/d)	NL (g/d)	
001	Total Nitrogen	--	1/Year – 24 hour composite	--	Monitoring Only	See Item 16 of this fact sheet.
					NL (g/d)	
101	Total Chromium	1 / Month	No change	0.24 kg/d	360 g/d	Loading limitations have increased due to increased reported effluent flow rates. Loading limits/monitoring requirements are expressed in grams per day rather than kilograms per day in order to convey these limits as whole numbers in accordance with GM06-2016. Loading limit for total zinc expressed as two significant figures in order to maintain consistency with the 2004 permit re-issuance.
				0.69 kg/d	2300 g/d	
101	Total Zinc	1 / Month	No change	1.2 kg/d	1800 g/d	
				3.4 kg/d	11000 g/d	
002	Zinc	1 / Quarter – Total Recoverable	1 / Quarter-Dissolved	NA	NA	Monitoring for the dissolved form of Zinc, rather than the total recoverable form, is suggested by storm water guidance contained in the Permit Manual (rev.2010) Section IN-4
002	Copper	1 / Quarter – Total Recoverable	1 / Quarter-Dissolved	NA	NA	Monitoring for the dissolved form of Copper, rather than the total recoverable form, is suggested by storm water guidance contained in the Permit Manual (rev.2010) Section IN-4

Changes to Special Conditions and Other Changes		
From	To	Rationale
Cover Page: Receiving Water Body Section 2 (Both Outfalls)	Cover Page: Receiving Water Body Section 1a (Both Outfalls)	Correction for permit writer transcription error in 2004 permit re-issuance.
Cover Page: Receiving Water Body Class II (Both Outfalls)	Cover Page: Receiving Water Body Class III (Both Outfalls)	Correction for permit writer transcription error in 2004 permit re-issuance.
Part I.A.1	Part I.A.1	Permit structure and language revised for acuity purposes.
Part I.A.2.	Part I.A.1.a	"The effluent shall be free of sheens" added due to possibility of oil & grease discharge from internal outfall 102, to which storm water collected within the diked area surrounding the fuel oil AST's flows. Flow to internal outfall 102 is treated via oil/water separators.
--	Part I.A.1.b.	Added for acuity purposes.
--	Part I.A.1.c.	Added in order to clarify TN monitoring requirement.
Part I.A.3	Part I.A.2	Permit structure and language revised for acuity purposes.
Part I.A.3.a.	Part I.A.2.a	Permit structure and language revised for acuity purposes.
Part I.A.3.b	Part I.A.2.b	Permit structure and language revised for acuity purposes.
Part I.A.3.c.	Part I.A.2.c	No change
--	Part I.A.2.d	New, reflects current agency guidance and GM06-2016
Part I.A.4	Part I.A.3	Permit structure and language revised for acuity purposes.
Part I.A.5	Part I.A.4	Permit structure and language revised for acuity purposes.
Part I.A.5.a	Part I.A.4.a.	Reference to storm water monitoring requirements section changed due to change in permit structure.
Part I.A.5.b	Part I.A.4.b	Definition of qualifying storm event (0.1 inches precipitation) has been removed in accordance with current Permit Manual (Section IN-4, rev.2010)
Part I.A.5.c	Removed	No longer applicable
Part I.A.6	Part I.A.4.d	"The effluent shall be free of sheens" added due to the fact that some petroleum products are stored outside.
Part I.B.1	Part I.B.1	No change
Part I.B.2	Part I.B.2	Language changed per current agency guidance (Permit Manual, Section IN-3, rev.2010)
Part I.B.3	Part I.B.3	No change
Part I.B.4	Part I.B.4	No change
Part I.B.5	Part I.B.5	Language changed to incorporate additional TMDL language and nutrient guidance per GM07-2008
Part I.B.6	Part I.B.6	Revised to reflect regional standard language.
Part I.B.7	Part I.B.7	No change
Part I.B.8	Part I.B.8	No change
Part I.B.9	Part I.B.9	No change
Part I.B.10	Part I.B.10	No change
Part I.B.11	Part I.B.11	Changed in order to require permittee to incorporate the most recent data in engineering calculations, as well as to require a schedule for submittal.
--	Part I.B.12	New, reflects current agency guidance (Permit Manual, Section IN-3, rev.2010).
Part I.C	Part I.C	Language added in accordance with guidance from OWP&CA (see

Changes to Special Conditions and Other Changes		
From	To	Rationale
		Attachment D). Acute endpoints changed as a result of lower ambient flows.
Part I.D Part I.E Part I.F Part I.G	Part I.D.1 Part I.D.2 Part I.D.3 Part I.D.4	Changes to storm water language and requirements are in accordance with 2010 revisions to the Permit Manual (Section IN-4) in order to maintain consistency with the 2009 re-issuance of the Industrial Storm Water General Permit (9 VAC 25-151-10 et.al). Additional Toxicity Screening is prompted by the results of the Storm Water Effluent Screening conducted in accordance with the Permit Manual (Section IN-4, rev. 2010) and guidance from OWP&CA (see **Attachment D**)

21. **Variances/Alternate Limits or Conditions**: None

22. **Public Notice Information required by 9 VAC 25-31-280 B**:

Comment period: Start Date: January 18, 2011 End Date: February 18, 2011
Published Dates: January 18, 2011 and January 25, 2011
Name of Newpaper: *Hopewell News*
Public Comments Received: None

All pertinent information is on file and may be inspected or copied by contacting Jeremy Kazio at:
Virginia Department of Environmental Quality (DEQ)
Piedmont Regional Office
4949-A Cox Road
Glen Allen, Virginia 23060-6296

Telephone Number 804/527-5044
Facsimile Number 804/527-5106
Email Jeremy.Kazio@deq.virginia.gov

DEQ accepts comments and requests for public hearing by e-mail, fax or postal mail. All comments and requests must be in writing and be received by DEQ during the comment period. Submittals must include the names, mailing addresses and telephone numbers of the commenter/requester and of all persons represented by the commenter/requester. A request for public hearing must also include: 1) The reason why a public hearing is requested. 2) A brief, informal statement regarding the nature and extent of the interest of the requester or of those represented by the requester, including how and to what extent such interest would be directly and adversely affected by the permit. 3) Specific references, where possible, to terms and conditions of the permit with suggested revisions. A public hearing may be held, including another comment period, if public response is significant and there are substantial, disputed issues relevant to the permit. The public may review the draft permit and application at the DEQ Piedmont Regional Office by appointment.

23. **Additional Comments**:

a. The concentration limitations for Chromium and Zinc assigned according to the Federal Effluent Guidelines to internal outfall 101 were evaluated in order to determine if these concentrations were considered protective of water quality. The FEG limit for chromium was compared against chromium VI as it had the lesser calculated WLA. Using the evaluation method explained in Item 16 of this fact sheet for Outfall 001 utilizing MSTRANTI and STATS 2.0.4, it was determined that the existing FEG limitations are protective of the Water Quality Standards (see **Attachment F**)

b. This facility does not currently have coverage under the Watershed Nutrient General Permit. This facility is not considered a significant discharger of nutrients to the Chesapeake Bay per the definition of "significant discharger" established in 9 VAC 25-720. Please see **Attachment F** for Total Phosphorus and Total Nitrogen calculations for this facility. All loads resulting from this evaluation are less than the equivalent loads of a significant discharger, which are Total Nitrogen ≥ 28,500 lbs/year and Total Phosphorus ≥ 3,800 lbs/year based on a discharge of 500,000 GPD to non-tidal freshwater and a TN concentration of 18.7 mg/L and a TP concentration of 2.5 mg/L. As the facility has not proposed an expansion or upgrade to the facility, coverage under the Chesapeake Bay Watershed Nutrient General Permit is not warranted.

c. This permit is being re-issued subsequent to permit expiration due to agency administrative matters.

d. A reduction in monitoring frequency was not considered for this permit due to occasional appearance of toxicity at Outfall 001.

e. Metal cleaning wastes produced by this facility are NOT discharged. A private company is hired to clean piping by circulating metal cleaning compounds throughout the system. The resulting wastes are collected and transported offsite for proper disposal.

f. Coordination with the Virginia Department of Health –Division of Shellfish Sanitation indicated that the existing discharge would not cause any shellfish closures within this facility's receiving water body.

g. This permit reissuance is non-controversial. The staff believes that the attached effluent limitations will maintain the Water Quality Standards adopted by the Board.

h. The discharge is not addressed in any planning document but will be included when the plan is updated.

i. EPA has waived the right to comment and/or object to the adequacy of the permit.

j. The permittee last paid their annual maintenance fee on September 16. 2010

k. The permittee has been an e-DMR participant since 11/27/2006. The permittee is an E4 participate in the VEEP.

24. **303(d) Listed Segments**:
During the 2008 305(b)/303(d) Water Quality Assessment Report, the tributary was assessed as fully supporting of the Aquatic Life Use and fully supporting with observed effects of the Fish Consumption Use due to the VDH Fish Consumption Advisory for kepone. Therefore it is considered a Category 2B (waters are fully supporting with observed effects).

25. **Attachments:** The following is a list of attachments and their contents:

Attachment A: Topographic Map and Flow Schematic
Attachment B: Honeywell International (VA0005291) Flow/Effluent Data
Attachment C: Site Inspection Report
Attachment D: Hopewell Cogeneration (VA0079502) Effluent Data for All Outfalls
Attachment E: WET Information (Outfall 001 & Outfall 002)
Attachment F: Limitation Evaluations / Nutrient Evaluation
Attachment G "Hopewell Cogeneration Facility Study of Cooling Tower Blowdown With Respect to 126 Priority Pollutants Chromium and Zinc"
Attachment H: Applicable Federal Effluent Guidelines
Attachment I: NPDES Permit Rating Worksheet

Attachment A:

Topographic Map and Flow Schematic

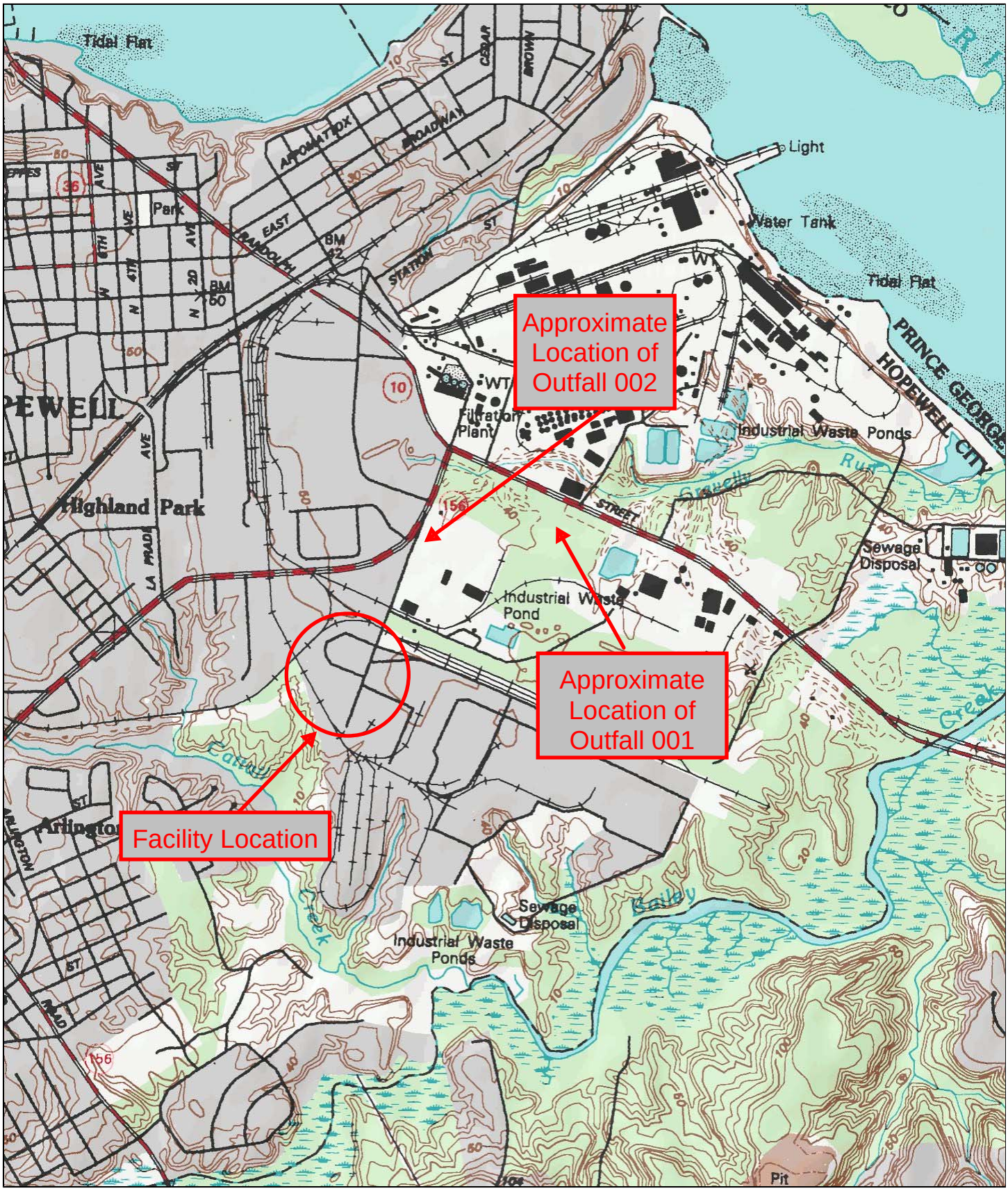

0 0.5 Mi
0 2000 Ft

Map provided by MyTopo.com

N
W
E
S
2D
3D
Road
Aerial
Bird's eye
Labels
Traffic
Hercules Rd
Hercules Rd
bing
© 2009 Microsoft Corporation
© 2009 Pictometry

HOPEWELL COGENERATION FACILITY

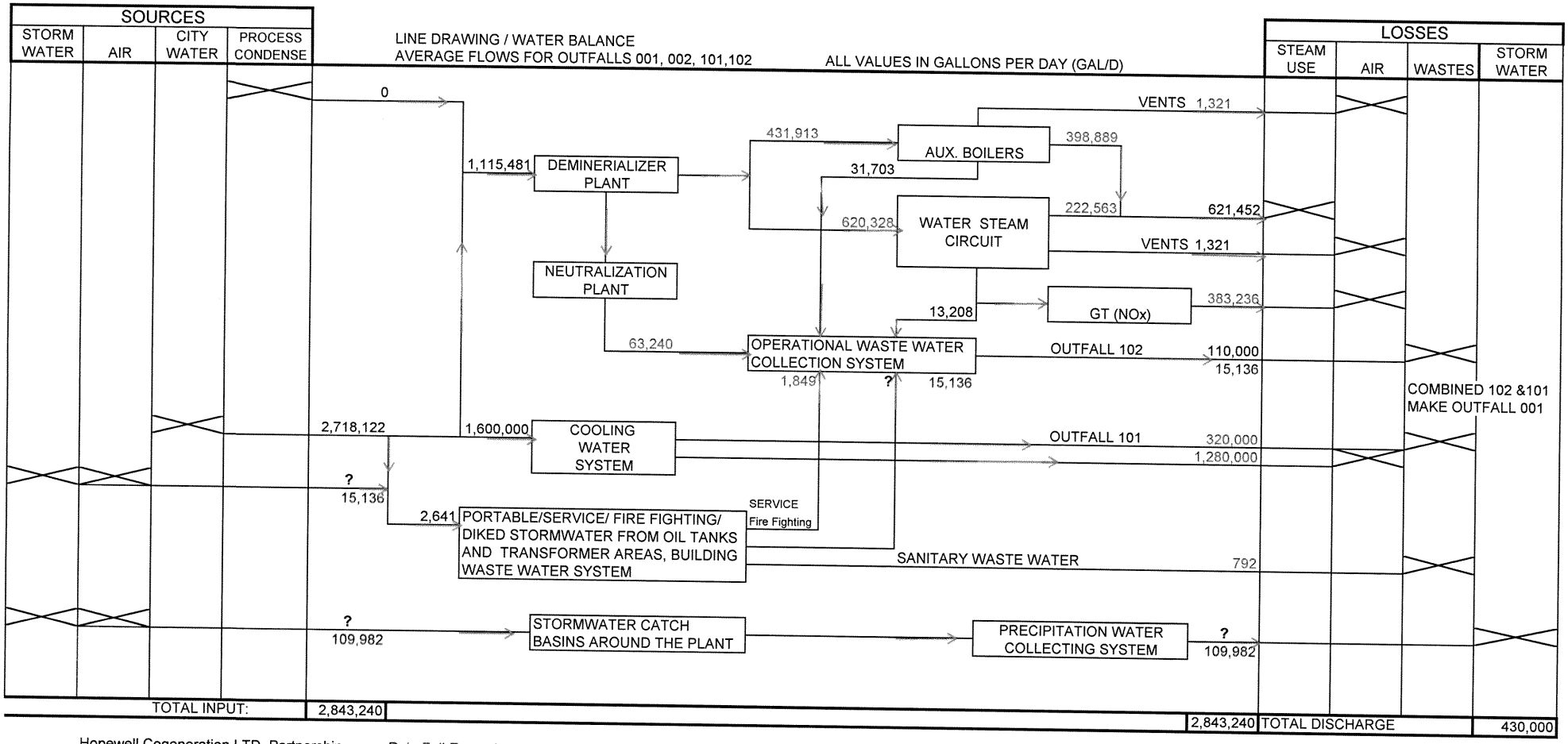

Hopewell Cogeneration LTD. Partnership
1114 Hercules Road
Hopewell, VA 23860
Date 06/28/93
Revised: July 27, 1998

Rain Fall Example

For 1 " of Rain

Total gallons = 125,118 gallons

Stormwater = 109,982

All the remander go through the Oil/Water Seperator

Average Flows Incoming

City Water	2,718,122 Gal/D

Average Flows Outgoing through Outfalls

Outfall 101 Cooling Tower Blow Down	320,000 Gal/D
Outfall 102 Boiler Blowdown	44,911 Gal/D
Outfall 102 Demineralizer	63,240 Gal/D
Outfall 102 All drains & GT washwater	1,849 Gal/D
Outfall 102 **TOTAL FLOW**	110,000 Gal/D
Outfall 001	430,000 Gal/D
Outfall 002 (Stormwater)	? (Depends on the event)

f:\home\cbarnes\env\water\waterbalance.xls

FLOW DIAGRAM OF WASTEWATER FACILITY

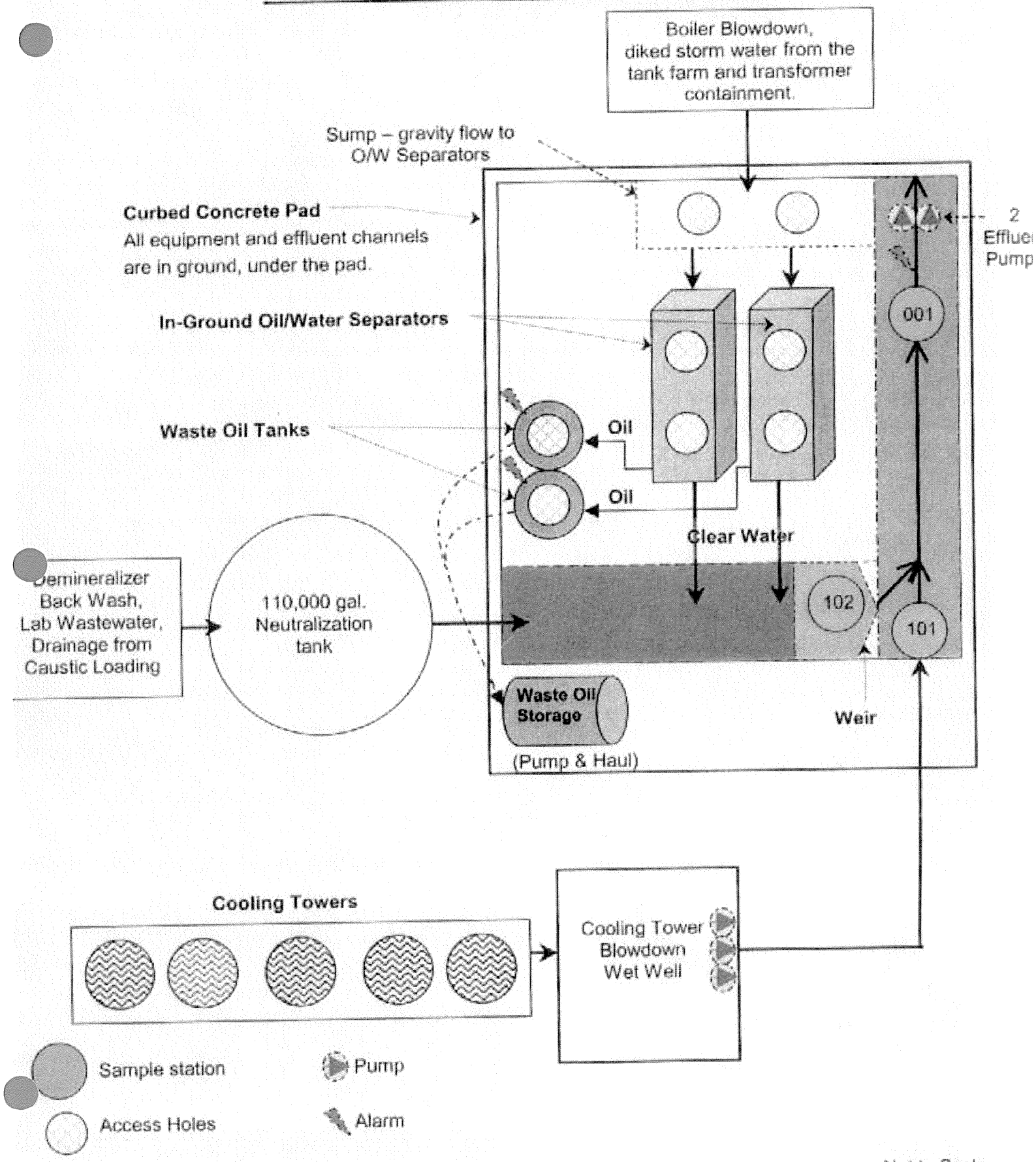

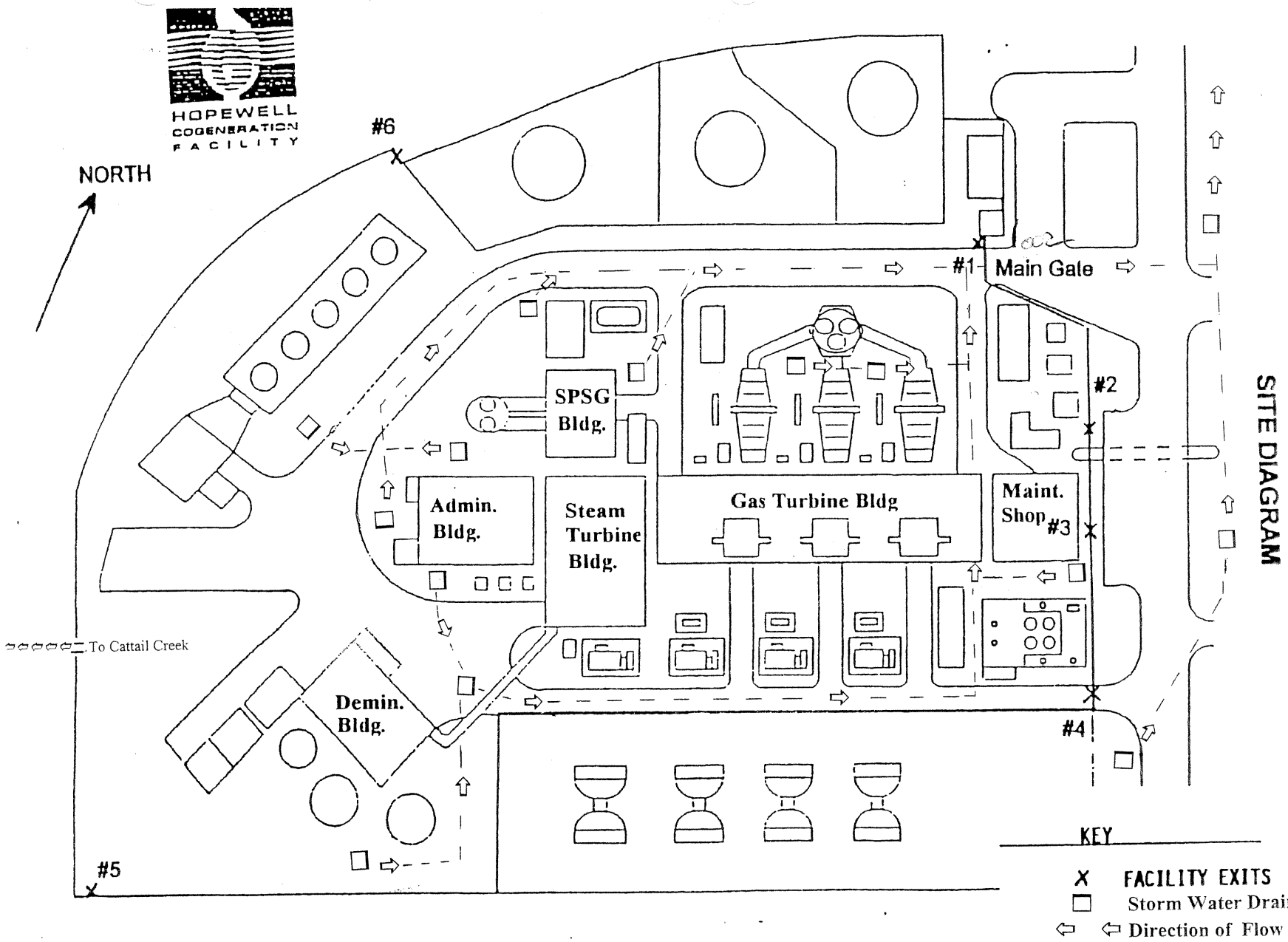

SPSG Bldg. = Auxiliary Boiler Building

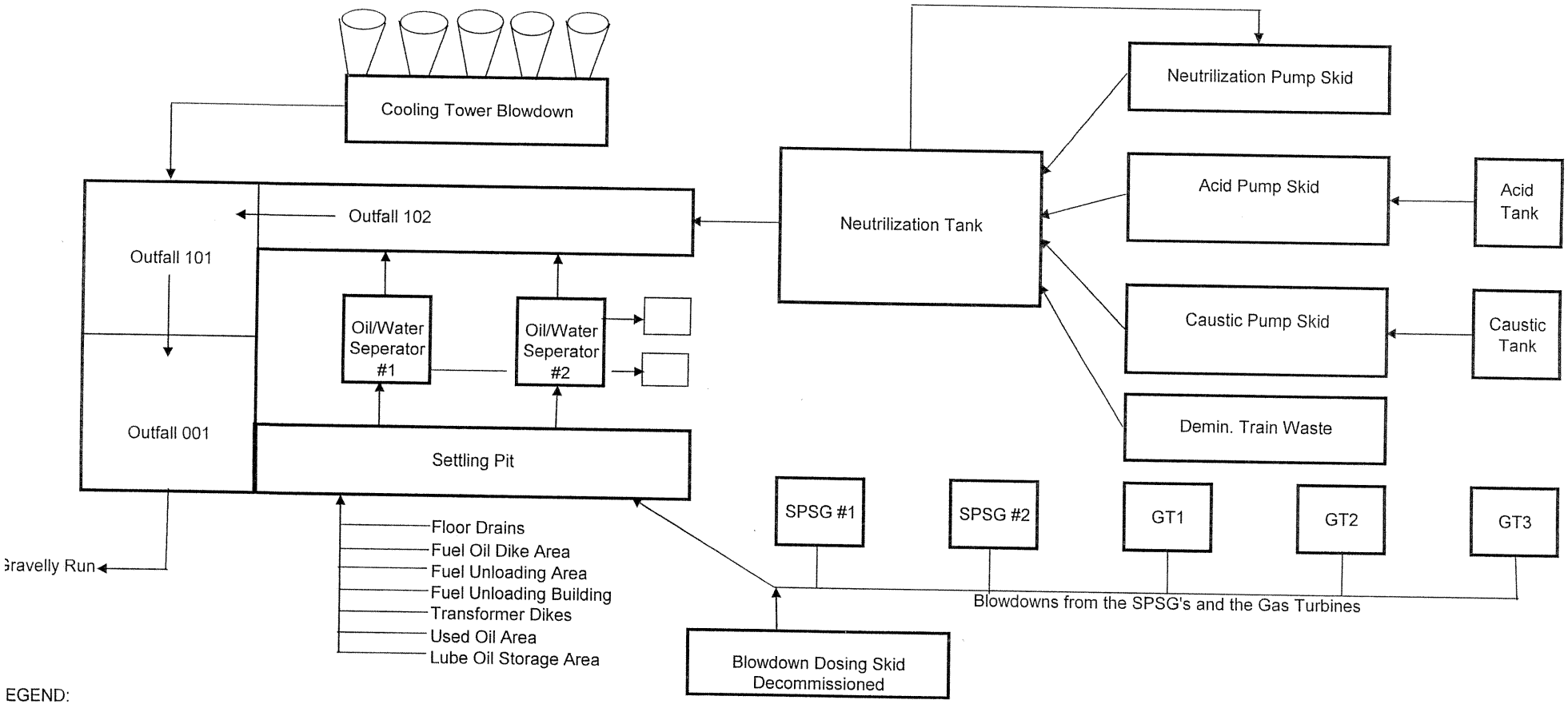

EGEND:

Oily Waste Holding Tank

Direction of Flow

Waste Water Drains and Collection System

VPDES Outfalls

ote: Stormwater is a Separate System

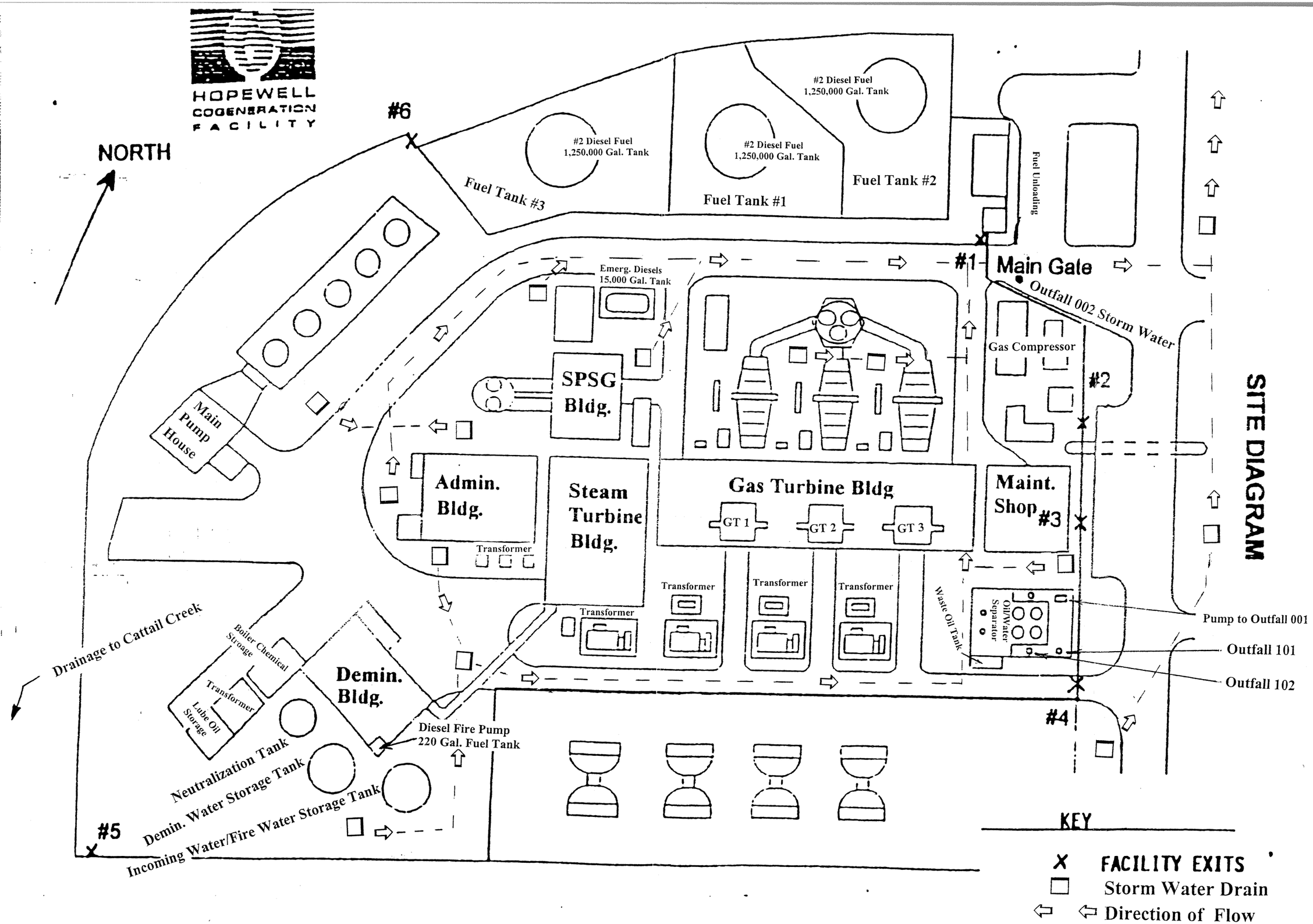
HOPEWELL
COGENERATION
FACILITY
SITE DIAGRAM
NORTH
#6
#2 Diesel Fuel
1,250,000 Gal. Tank
Fuel Tank #3
#2 Diesel Fuel
1,250,000 Gal. Tank
Fuel Tank #1
#2 Diesel Fuel
1,250,000 Gal. Tank
Fuel Tank #2
Fuel Unloading
#1
Main Gate
Outfall 002 Storm Water
Emerg. Diesels
15,000 Gal. Tank
SPSG
Bldg.
Gas Compressor
#2
Main
Pump
House
Admin.
Bldg.
Steam
Turbine
Bldg.
Gas Turbine Bldg
GT 1
GT 2
GT 3
Maint.
Shop
#3
Transformer
Transformer
Transformer
Transformer
Transformer
Waste Oil Tank
Oil/Water
Separator
Pump to Outfall 001
Outfall 101
Outfall 102
Drainage to Cattail Creek
Boiler Chemical
Storage
Transformer
Lube Oil
Storage
Demin.
Bldg.
Diesel Fire Pump
220 Gal. Fuel Tank
#4
Neutralization Tank
Demin. Water Storage Tank
Incoming Water/Fire Water Storage Tank
#5
KEY
FACILITY EXITS
Storm Water Drain
Direction of Flow

Attachment B:

Honeywell International (VA0005291) Flow/Effluent Data

Derivation of Ambient Low-Flow Conditions for Hopewell Cogeneration (VA0079502) from Honeywell International Inc.(VA0005291) Flow Data
December 1998 - December 2008

	DMR Due Date	Outfall 001			Outfall 002			Combined Outfalls Monthly Average Flow	Combined Outfalls Mo.Avg. Flow minus Combined Deviation from Max.	
		Monthly Average (MGD)	Maximum (MGD)	Deviation between Max. & Mo. Avg.	Monthly Average (MGD)	Maximum (MGD)	Deviation between Max. & Mo. Avg.			
1	12/10/1998	66.39	78.79	12.4	40.32	43.8	3.48	106.71	90.83	
2	1/10/1999	63.15	69.36	6.21	37.88	43.3	5.42	101.03	89.4	
3	2/10/1999	60.7	66.5	5.8	34.18	38.49	4.31	94.88	84.77	
4	3/10/1999	64.01	69.11	5.1	34.81	39.55	4.74	98.82	88.98	
5	4/10/1999	64.79	70.79	6	34.57	39.29	4.72	99.36	88.64	
6	5/10/1999	69.67	76.98	7.31	38.77	45	6.23	108.44	94.9	
7	6/10/1999	77.64	86.7	9.06	47.22	52.56	5.34	124.86	110.46	
8	7/10/1999	83.01	90.46	7.45	48.18	52.27	4.09	131.19	119.65	
9	8/10/1999	87.59	94.11	6.52	50.52	53.87	3.35	138.11	128.24	
10	9/10/1999	86.86	93.23	6.37	49.95	54.64	4.69	136.81	125.75	
11	10/10/1999	83.8	99.1	15.3	43.19	51.63	8.44	126.99	103.25	
12	11/10/1999	79.46	88.01	8.55	44.86	50.01	5.15	124.32	110.62	
13	12/10/1999	77.42	84.57	7.15	40.63	46.9	6.27	118.05	104.63	
14	1/10/2000	71.98	82.5	10.52	39.58	46.66	7.08	111.56	93.96	
15	2/10/2000	70.06	78.75	8.69	31.98	37.51	5.53	102.04	87.82	
16	3/10/2000	71.14	77.16	6.02	36.63	43.81	7.18	107.77	94.57	
17	4/10/2000	75.72	84.2	8.48	40.53	46.27	5.74	116.25	102.03	
18	5/10/2000	81.35	86.79	5.44	40.41	45.94	5.53	121.76	110.79	
19	6/10/2000	84.78	93.37	8.59	45.97	52.36	6.39	130.75	115.77	
20	7/10/2000	87.01	94.02	7.01	43.34	53	9.66	130.35	113.68	
21	8/10/2000	84.51	91.69	7.18	50.87	54.17	3.3	135.38	124.9	
22	9/10/2000	87.65	95.71	8.06	48.07	52.42	4.35	135.72	123.31	
23	10/10/2000	87.22	93.77	6.55	48.56	51.73	3.17	135.78	126.06	
24	11/10/2000	80.75	89.17	8.42	43.92	47.02	3.1	124.67	113.15	
25	12/10/2000	76.21	85.75	9.54	40.8	46.58	5.78	117.01	101.69	
26	1/10/2001	71.64	76.85	5.21	32.74	37.18	4.44	104.38	94.73	
27	2/10/2001	68.9	77.63	8.73	31.82	43.62	11.8	100.72	80.19	
28	3/10/2001	64.99	71.36	6.37	34.43	44.24	9.81	99.42	83.24	
29	4/10/2001	70.63	104.97	34.34	38.81	52.95	14.14	109.44	60.96	<--
30	5/10/2001	74.48	83.4	8.92	38.38	51.65	13.27	112.86	90.67	
31	6/10/2001	78.37	85.07	6.7	40.17	50.53	10.36	118.54	101.48	
32	7/10/2001	84.47	91.77	7.3	39.47	49.3	9.83	123.94	106.81	
33	8/10/2001	84.13	92.21	8.08	38.5	45.26	6.76	122.63	107.79	
34	9/10/2001	74.28	83.62	9.34	48.43	53.97	5.54	122.71	107.83	
35	10/10/2001	77.63	88.93	11.3	48.15	55.24	7.09	125.78	107.39	
36	11/10/2001	74.82	89.16	14.34	43.7	56.4	12.7	118.52	91.48	
37	12/10/2001	75.68	95.83	20.15	34.54	46.42	11.88	110.22	78.19	<--
38	1/10/2002	75.16	81.33	6.17	32.88	40.36	7.48	108.04	94.39	
39	2/10/2002	71.72	79.89	8.17	29.67	36.98	7.31	101.39	85.91	
40	3/10/2002	75.99	88.8	12.81	32.68	46.31	13.63	108.67	82.23	
41	4/10/2002	71.04	85.69	14.65	33.13	43.97	10.84	104.17	78.68	<--
42	5/10/2002	75.08	87	11.92	37.89	43.17	5.28	112.97	95.77	
43	6/10/2002	75.22	90.14	14.92	45.53	51.65	6.12	120.75	99.71	
44	7/10/2002	83.81	92.84	9.03	40.87	52	11.13	124.68	104.52	
45	8/10/2002	85.93	95.22	9.29	45.42	52.98	7.56	131.35	114.5	
46	9/10/2002	83.55	96.91	13.36	50.07	52.55	2.48	133.62	117.78	
47	10/10/2002	81.61	92.68	11.07	49.85	53.77	3.92	131.46	116.47	
48	11/10/2002	78.5	89.31	10.81	45.57	57.94	12.37	124.07	100.89	
49	12/10/2002	76.15	96.66	20.51	41.47	55.43	13.96	117.62	83.15	
50	1/10/2003	70.9	85.98	15.08	34.23	40.44	6.21	105.13	83.84	
51	2/10/2003	68.83	91.65	22.82	34.15	56.83	22.68	102.98	57.48	<--
52	3/10/2003	66.17	81.08	14.91	34.16	39.76	5.6	100.33	79.82	
53	4/10/2003	69.15	88.15	19	37.48	51.16	13.68	106.63	73.95	<--
54	5/10/2003	67.55	81.59	14.04	33.94	43.59	9.65	101.49	77.8	<--
55	6/10/2003	74.49	90.91	16.42	40.83	52.42	11.59	115.32	87.31	
56	7/10/2003	78.17	89.7	11.53	44.83	51.76	6.93	123	104.54	
57	8/10/2003	78	87.74	9.74	48.3	53.34	5.04	126.3	111.52	
58	9/10/2003	83.25	98.42	15.17	48.96	77.36	28.4	132.21	88.64	
59	10/10/2003	75.52	105.43	29.91	46.83	62.97	16.14	122.35	76.3	<--
60	11/10/2003	72.61	90.14	17.53	38.67	49.95	11.28	111.28	82.47	
61	12/10/2003	71.99	79.3	7.31	35.23	38.19	2.96	107.22	96.95	
62	1/10/2004	69.65	84.45	14.8	30.83	37.2	6.37	100.48	79.31	
63	2/10/2004	64.31	77.16	12.85	32.62	38.68	6.06	96.93	78.02	<--
64	3/10/2004	64.03	76.2	12.17	34.75	49.05	14.3	98.78	72.31	<--
65	4/10/2004	69.05	83.81	14.76	37.69	43.43	5.74	106.74	86.24	
66	5/10/2004	68.85	85.39	16.54	37.14	43.41	6.27	105.99	83.18	
67	6/10/2004	80.72	93.71	12.99	44.39	49.49	5.1	125.11	107.02	
68	7/10/2004	79.86	91.06	11.2	46.39	53.24	6.85	126.25	108.2	
69	8/10/2004	80.02	91.77	11.75	48.51	64.29	15.78	128.53	101	
70	9/10/2004	81.54	104.46	22.92	47.74	50.8	3.06	129.28	103.3	
71	10/10/2004	79.88	99.47	19.59	44.41	58.47	14.06	124.29	90.64	
72	11/10/2004	77.88	93.27	15.39	44.96	49.76	4.8	122.84	102.65	
73	12/10/2004	72.78	93.45	20.67	42.13	47.46	5.33	114.91	88.91	
74	1/10/2005	67.72	83.79	16.07	37.01	42.84	5.83	104.73	82.83	
75	2/10/2005	65.05	82.95	17.9	35.42	52.85	17.43	100.47	65.14	<--
76	3/10/2005	63.96	74.4	10.44	39.29	43.9	4.61	103.25	88.2	
77	4/10/2005	61.93	98.42	36.49	35.82	43.97	8.15	97.75	53.11	<--
78	5/10/2005	68.75	84.06	15.31	40.25	46.96	6.71	109	86.98	
79	6/10/2005	76.11	91.67	15.56	43.31	49.88	6.57	119.42	97.29	
80	7/10/2005	80.13	96.82	16.69	46.91	51.02	4.11	127.04	106.24	
81	8/10/2005	77.67	91.44	13.77	49.37	51.01	1.64	127.04	111.63	
82	9/10/2005	81.35	92.71	11.36	49.21	54.95	5.74	130.56	113.46	
83	10/10/2005	80.88	89.36	8.48	47.93	57.25	9.32	128.81	111.01	
84	11/10/2005	76.27	90.94	14.67	42.69	50.21	7.52	118.96	96.77	
85	12/10/2005	75.76	84.15	8.39	34.39	44.61	10.22	110.15	91.54	
86	1/10/2006	40.32	84.84	44.52	34.5	46.99	12.49	74.82	17.81	<--
87	2/10/2006	70.79	81.46	10.67	35.09	44.51	9.42	105.88	85.79	
88	3/10/2006	73.06	78.74	5.68	35.5	49.62	14.12	108.56	88.76	
89	4/10/2006	73.61	86.5	12.89	38.36	42.53	4.17	111.97	94.91	
90	5/10/2006	78.74	88.96	10.22	44.73	49.38	4.65	123.47	108.6	
91	6/10/2006	79.8	88.89	9.09	46.75	60.2	13.45	126.55	104.01	
92	7/10/2006	73.69	84.68	10.99	48.48	56.03	7.55	122.17	103.63	
93	8/10/2006	76.74	85.18	8.44	50.4	56.65	6.25	127.14	112.45	
94	9/10/2006	76.17	83.63	7.46	50.25	66.4	16.15	126.42	102.81	
95	10/10/2006	62.69	74.7	12.01	34.28	54.79	20.51	96.97	64.45	<--
96	11/10/2006	56.68	75.8	19.12	35.09	41.9	6.81	91.77	65.84	<--
97	12/10/2006	52.41	61.26	8.85	34.35	40.87	6.52	86.76	71.39	<--
98	1/10/2007	51.23	61.4	10.17	34.32	44.08	9.76	85.55	65.62	<--
99	2/10/2007	51.41	60.89	9.48	36.58	48.35	11.77	87.99	66.74	<--
100	3/10/2007	48.25	55.2	6.95	32.71	40.68	7.97	80.96	66.04	<--
101	4/10/2007	52.24	67.69	15.45	33.66	43.79	10.13	85.9	60.32	<--
102	5/10/2007	57.14	64.99	7.85	38.09	51.21	13.12	95.23	74.26	<--
103	6/10/2007	63	70.04	7.04	47.23	57.74	10.51	110.23	92.68	
104	7/10/2007	69.94	77.13	7.19	50.66	69.77	19.11	120.6	94.3	
105	8/10/2007	67.26	76.92	9.66	51.58	69.09	17.51	118.84	91.67	
106	9/10/2007	65.22	80.72	15.5	43.02	54.26	11.24	108.24	81.5	
107	10/10/2007	72.97	84.65	11.68	43.8	54.47	10.67	116.77	94.42	
108	11/10/2007	72.96	78.69	5.73	45.44	50.68	5.24	118.4	107.43	
109	12/10/2007	65.07	76.82	11.75	41.54	49.97	8.43	106.61	86.43	
110	1/10/2008	60.15	69.67	9.52	34.92	46.81	11.89	95.07	73.66	<--
111	2/10/2008	59.01	70.62	11.61	28.9	32.97	4.07	87.91	72.23	<--
112	3/10/2008	60.12	65.98	5.86	32.35	40.76	8.41	92.47	78.2	<--
113	4/10/2008	59.77	68.38	8.61	36.88	46.19	9.31	96.65	78.73	<--
114	5/10/2008	65.52	75.73	10.21	41.12	49.47	8.35	106.64	88.08	
115	6/10/2008	68.04	83.29	15.25	44.28	50.81	6.53	112.32	90.54	
116	7/10/2008	72.51	77.16	4.65	49.68	53.31	3.63	122.19	113.91	
117	8/10/2008	72.48	85.99	13.51	48.73	53	4.27	121.21	103.43	
118	9/10/2008	71.1	78.54	7.44	47.4	50.8	3.4	118.5	107.66	
119	10/10/2008	67.17	76.18	9.01	46.33	50.01	3.68	113.5	100.81	
120	11/10/2008	59.7	66.6	6.9	45.64	54.19	8.55	105.34	89.89	
121	12/10/2008	56.29	68.71	12.42	37.7	45.9	8.2	93.99	73.37	<--
	Average	72.07	83.96	11.89	41.00	49.37	8.37	113.07	92.81	
	10% tile	60.12	69.36		33.66	40.44		95.23	72.23	
	90% tile			17.90			14.06	130.35	113.48	
	Minimums	40.32	55.2		28.9	32.97		74.82	17.81	
	Maximums			44.52			28.4	138.11	128.24	

Combined Outfall Estimated Monthly Minimum Values Under the 2004 Assumed Low-Flow Value (also indicated by arrows above)

1)	17.81	11)	66.74	21)	78.02
2)	53.11	12)	71.39	22)	78.19
3)	57.48	13)	72.23	23)	78.2
4)	60.32	14)	72.31	24)	78.68
5)	60.96	15)	73.37	25)	78.73
6)	64.45	16)	73.66		
7)	65.14	17)	73.95		
8)	65.62	18)	74.26		
9)	65.84	19)	76.3		
10)	66.04	20)	77.8		

2010 Ambient Flow Derivation Formula		
(A + B) - (C + D) = X		
Where:	A =	10th percentile of monthly average flow from Outfall 001
	B =	10th percentile of monthly average flow from Outfall 002
	C =	90th percentile of deviation between maximum and monthly average flow - Outfall 001
	D =	90th percentile of deviation between maximum and monthly average flow - Outfall 002
	X =	Estimated Ambient Low Flow
(60.12 + 33.66) - (17.90 + 14.06) =		61.82

Data from Honeywell International Inc. Outfalls 001 & 002 (VA0005291)- Used for ambient data in Gravelly Run for Hopewell Cogeneration (VA0079502) Outfall 001

pH Data from DMR's 2004-2008				
	Outfall 001		Outfall 002	
Parameter / Units →	pH (SU)		pH (SU)	
DMR Due Date	**MIN**	**MAX**	**MIN**	**MAX**
10-Aug-04	6.2	7.2	6.1	8.5
10-Sep-04	6	7.3	6.1	7.7
10-Oct-04	6	8.2	6	7.6
10-Nov-04	4.9	7.9	6.4	7.7
10-Dec-04	6	7.2	6.5	7.6
10-Jan-05	6.1	7.2	6.4	7.6
10-Feb-05	6	7.1	6.6	7.6
10-Mar-05	6	7.5	6.7	7.3
10-Apr-05	6	7.9	6.7	7.4
10-May-05	6.1	7.6	6.4	8.1
10-Jun-05	6	7	6.6	8
10-Jul-05	6.5	7.1	6.8	9
10-Aug-05	6.2	7.8	7	8.2
10-Sep-05	5.2	8.8	6.3	8.3
10-Oct-05	6.6	7.6	7	8.1
10-Nov-05	6.2	7.3	6.3	7.9
10-Dec-05	6.1	7.4	6.5	8.2
10-Jan-06	5.9	7.9	6.5	7.2
10-Feb-06	6	7.2	6.6	7.2
10-Mar-06	6.2	6.9	6.6	7.4
10-Apr-06	6	7.4	6.4	8.7
10-May-06	6.2	7.4	6.8	8.2
10-Jun-06	2.8	7.4	6.3	7.8
10-Jul-06	6.4	8.1	6.1	8.2
10-Aug-06	6	7.3	6.6	8
10-Sep-06	6.3	8.5	6.2	8.4
10-Oct-06	6	8	6.5	7.4
10-Nov-06	6	8.7	6.9	7.7
10-Dec-06	6.1	7.9	6.3	7.7
10-Jan-07	6.1	8	6.6	7.7
10-Feb-07	6	8	6.5	7.9
10-Mar-07	6.3	7.6	6.8	8.5
10-Apr-07	6	8	6.6	7.8
10-May-07	6.7	8	6.3	8.1
10-Jun-07	6.6	8.9	6.1	8.3
10-Jul-07	6.8	7.6	6.3	8.5
10-Aug-07	6.8	7.9	6.7	8.6
10-Sep-07	0.5	8.9	6.4	8.2
10-Oct-07	6	8	6.9	8.4
10-Nov-07	6.2	7.7	6.9	8.2
10-Dec-07	6.6	8.2	7	8.8
10-Jan-08	6	8	6.7	8.1
10-Feb-08	6.2	8.7	6.8	8
10-Mar-08	6.6	8.1	6.6	7.8
10-Apr-08	6.5	8.1	6.9	8.3
10-May-08	6.3	7.3	6.9	7.9
10-Jun-08	6	7.5	6.8	7.9
10-Jul-08	6.4	7.5	6.9	8.1
10-Aug-08	6.9	7.8	6.9	8.7
10-Sep-08	6.3	7.7	6.3	8.4
10-Oct-08	6.3	7.4	6.6	7.8
10-Nov-08	6.7	7.6	6.6	7.9
10-Dec-08	6.8	8.2	7.1	8.1
Maximum	**6.9**	**8.9**	**7.1**	**9**
90% tile	**6.68**	**8.44**	**6.9**	**8.5**
10% tile	**6**	**7.2**	**6.22**	**7.44**
Average Max.90%tile	**8.47**			
Average Max.10%tile	**7.32**			

Hardness Data from WET Testing 2004-2008		
	Outfall 001	Outfall 002
Month/Year Received	Hardness as CaCO3 (mg/L)	Hardness as CaCO3 (mg/L)
Aug-04	45	35
Aug-04	38	45
Aug-04	46	48
Jul-05	63	70
Jul-05	64	72
Jul-05	80	66
Jul-06	63	59
Jul-06	63	61
Jul-06	63	62
Jul-07	81	78
Jul-08	DATA UNAVAILABLE	
Average	60.1	

Temperature Data from Application 2C 2008 Re-Issuance

Outfall 001			
Maximum Daily Value	Maximum 30-Day Value	Long Term Average Value	
27	23.4	23.4	Winter Temp. (°C)
44.7	41.6	40.3	Summer Temp. (°C)
Number of Analyses = 90			

Outfall 002			
Maximum Daily Value	Maximum 30-Day Value	Long Term Average Value	
26.7	24.1	23.7	Winter Temp. (°C)
43.1	40.3	38.9	Summer Temp. (°C)
Number of Analyses = 90			

Average of Outfalls 001 & 002 Long Term Average Summer Temperature (°C)	39.6

Attachment C:

Site Inspection Report

Virginia Department of Environmental Quality

WASTEWATER FACILITY INSPECTION REPORT

FACILITY NAME: Hopewell Cogeneration Facility		**INSPECTION DATE:** February 4, 2009	
		INSPECTOR Mike Dare	
PERMIT No.: VA0079502		**REPORT DATE:** February 6, 2009	
TYPE OF FACILITY: ☐ Municipal ☑ Small Minor ☑ Industrial ☐ Federal		**TIME OF INSPECTION:**	Arrival 0900 hrs. / Departure 1330 hrs
		TOTAL TIME SPENT (including prep & travel)	16 hours
PHOTOGRAPHS: ☑ Yes ☐ No		**UNANNOUNCED INSPECTION?** ☐ Yes ☑ No	
REVIEWED BY / Date:			
PRESENT DURING INSPECTION: Chuck Barnes, Leanne Raynor (DEQ)			

TECHNICAL INSPECTION

1. Has there been any new construction? • If so, were plans and specifications approved? Comments:	☐ Yes ☑ No
2. Is the Operations and Maintenance Manual approved and up-to-date? Comments: **Updated at time of most recent permit renewal**	☑ Yes ☐ No
3. Are the Permit and/or Operation and Maintenance Manual specified licensed operator being met? Comments: **Permit requires 1 Class III Op.; There are 3 Class III Ops. at facility**	☑ Yes ☐ No
4. Are the Permit and/or Operation and Maintenance Manual specified operator staffing requirements being met? Comments:	☑ Yes ☐ No
5. Is there an established and adequate program for training personnel? Comments: **Environmental training is performed annually**	☑ Yes ☐ No
6. Are preventive maintenance task schedules being met? Comments: **Computer system generates PM work orders**	☑ Yes ☐ No
7. Does the plant experience any organic or hydraulic overloading? Comments:	☐ Yes ☑ No
8. Has there been any bypassing or overflows since the last inspection? Comments:	☐ Yes ☑ No
9. Is the standby generator (including power transfer switch) operational and exercised regularly? Comments: **Two diesel generators and a UPS system**	☑ Yes ☐ No
10. Is the plant alarm system operational and tested regularly? Comments:	☑ Yes ☐ No

VA DEQ Wastewater Facility Inspection Report

Permit #	VA0079502

TECHNICAL INSPECTION

11. Is sludge disposed of in accordance with the approved sludge management plan? Comments: **N/A**	☐ Yes ☐ No
12. Is septage received? • If so, is septage loading controlled, and are appropriate records maintained? Comments: **N/A**	☐ Yes ☐ No
13. Are all plant records (operational logs, equipment maintenance, industrial waste contributors, sampling and testing) available for review and are records adequate? Comments:	☑ Yes ☐ No
14. Which of the following records does the plant maintain? ☑ Operational logs ☑ Instrument maintenance & calibration ☑ Mechanical equipment maintenance ☐ Industrial Waste Contribution (Municipal facilities) Comments:	
15. What does the operational log contain? ☑ Visual observations ☑ Flow Measurement ☑ Laboratory results ☑ Process adjustments ☑ Control calculations ☐ Other (specify) Comments:	
16. What do the mechanical equipment records contain? ☑ As built plans and specs ☑ Manufacturers instructions ☑ Lubrication schedules ☑ Spare parts inventory ☑ Equipment/parts suppliers ☐ Other (specify) Comments:	
17. What do the industrial waste contribution records contain (Municipal only)? ☐ Waste characteristics ☐ Impact on plant ☐ Locations and discharge types ☐ Other (specify) Comments: **N/A**	
18. Which of the following records are kept at the plant and available to personnel? ☑ Equipment maintenance records ☑ Operational log ☐ Industrial contributor records ☑ Instrumentation records ☑ Sampling and testing records Comments:	
19. List records not normally available to plant personnel and their location: Comments: **N/A**	
20. Are the records maintained for the required time period (three or five years)? Comments:	☑ Yes ☐ No

VA DEQ Wastewater Facility Inspection Report

Permit #	VA0079502

UNIT PROCESS EVALUATION SUMMARY SHEET

UNIT PROCESS	APPLICABLE	PROBLEMS*	COMMENTS
Sewage Pumping	**YES**		*Two effluent pumps*
Flow Measurement (Influent)	**NO**		
Screening/Comminution	**NO**		
Grit Removal	**NO**		
Oil/Water Separator	**YES**		*Two oil/water separators discharge through outfall 102*
Flow Equalization	**NO**		
Ponds/Lagoons	**NO**		
Imhoff Tank	**NO**		
Primary Sedimentation	**NO**		
Trickling Filter	**NO**		
Septic Tank and Sand Filter	**NO**		
Rotating Biological Contactor	**NO**		
Activated Sludge Aeration	**NO**		
Biological Nutrient Removal	**NO**		
Sequencing Batch Reactor	**NO**		
Secondary Sedimentation	**NO**		
Flocculation	**NO**		
Tertiary Sedimentation	**NO**		
Filtration	**NO**		
Micro-Screening	**NO**		
Activated Carbon Adsorption	**NO**		
Chlorination	**YES**		*Added to cooling tower water as biocide (tablet form)*
Dechlorination	**NO**		
Ozonation	**NO**		
Ultraviolet Disinfection	**NO**		
Post Aeration	**NO**		
Flow Measurement (Effluent)	**YES**		*Flow at outfall 001 is sum of flows at outfalls 101 and 102*
Land Application (Effluent)	**NO**		
Plant Outfall	**YES**	**1**	*Permittee should inspect discharge point routinely for proper operation*
Sludge Pumping	**NO**		
Flotation Thickening (DAF)	**NO**		
Gravity Thickening	**NO**		
Aerobic Digestion	**NO**		
Anaerobic Digestion	**NO**		
Lime Stabilization	**NO**		
Centrifugation	**NO**		
Sludge Press	**NO**		
Vacuum Filtration	**NO**		
Drying Beds	**NO**		
Thermal Treatment	**NO**		
Incineration	**NO**		
Composting	**NO**		
Land Application (Sludge)	**NO**		

* Problem Codes

1. Unit Needs Attention
2. Abnormal Influent/Effluent
3. Evidence of Equipment Failure
4. Unapproved Modification or Temporary Repair
5. Evidence of Process Upset
6. Other (explain in comments)

INSPECTION OVERVIEW AND CONDITION OF TREATMENT UNITS

The Hopewell Cogeneration Facility generates electricity for Dominion Virginia Power and steam for a nearby Hercules plant.

OUTFALL 101 – Cooling tower blowdown is discharged through outfall 101 and is analyzed for chlorine, zinc and chromium.

OUTFALL 102 – A 110,000-gallon neutralization tank receives demineralizer backwash water, drainage from the caustic/sulfuric acid loading ramp, containment areas within the demineralization building and lab wastewater. Boiler blowdown flows through an oil-water separator and combines with flow from the neutralization tank prior to discharging through outfall 102. This outfall is analyzed for oil and grease and total suspended solids.

OUTFALL 001 – Outfalls 101 and 102 combine to form outfall 001 and is analyzed for pH, phosphorus and temperature as well as acute and chronic toxicity. The flow at outfall 001 is pumped to Gravelly Run. The flow at outfall 001 is monitored constantly for pH and temperature via an in-line probe. If the pH and/or temperature limits are not met, the outfall pumps shut down. Because outfall 001 is located in an underground vault, it was not observed at the time of inspection. The discharge point on Gravelly Run was not observed due to being inaccessible.

See attached *Flow Diagram of Wastewater Facility*.

STORMWATER OUTFALL 002 – Exposed areas outside the buildings and AST containment are covered with pavement, grass or gravel. Stormwater inlets are in place throughout the facility. Underground stormwater piping combines to form one pipe and leaves the property at outfall 002. This outfall is accessible for sampling via a manhole. The pipe combines offsite with stormwater piping from other locations and discharges adjacent to a nearby railroad track. No impact from local industrial activities was noted.

VA DEQ Wastewater Facility Inspection Report

Permit #	VA0079502

EFFLUENT FIELD DATA: Data via inline probe; * indicates not ascertained

Flow	* MGD	**Dissolved Oxygen**	* mg/L	**TRC (Contact Tank)**	N/A mg/L
pH	6.9 S.U.	**Temperature**	46.1 °C	**TRC (Final Effluent)**	* mg/L

Was a Sampling Inspection conducted? ☐ Yes (see Sampling Inspection Report) ☑ No

CONDITION OF OUTFALL AND EFFLUENT CHARACTERISTICS:

1. Type of outfall: ☐ Shore based ☐ Submerged Diffuser? ☐ Yes ☐ No
2. Are the outfall and supporting structures in good condition? ☐ Yes ☐ No
3. Final Effluent (evidence of following problems): ☐ Sludge bar ☐ Grease ☐ Turbid effluent ☐ Visible foam ☐ Unusual color ☐ Oil sheen
4. Is there a visible effluent plume in the receiving stream? ☐ Yes ☐ No
5. Receiving stream: ☐ No observed problems ☐ Indication of problems (explain below)

Comments: **Outfall 001 point of discharge on Gravelly Run inaccessible at time of inspection**

REQUIRED CORRECTIVE ACTIONS:

1. Outfall 001 point of discharge on Gravelly Run should be routinely inspected by permittee for proper operation.
2. It is recommended that the two floor drains located in the main area of the shop be modified so that they are closed during normal operations. This to prevent discharge of hazardous fluids in the event of a spill or leak.

NOTES and COMMENTS:

None

INSPECTION PHOTOS – VA0079502

Outfall 102 sample point is below circular grate in background. Outfall 101 is below circular grate in foreground.

Outfall 001 sample point is below circular grate at right.

Stormwater outfall 002 is below manway lid at center.

Stormwater from adjoining properties joins stormwater from the cogeneration facility and discharges in a swale next to nearby railroad tracks. (Standing water in swale was clear.)

The discharge from outfall 001 is pumped to Gravelly Run (above). Point of discharge could not be located at time of inspection.

It is recommended that the two floor drains in the main area of the "shop" be modified so that they are closed during normal operations to prevent discharge of hazardous fluids in the event of a spill or leak. (One of two floor drains is pictured above.)

VIRGINIA DEPARTMENT OF ENVIRONMENTAL QUALITY
VIRGINIA POLLUTION DISCHARGE ELIMINATION SYSTEM
Stormwater Management Evaluation

Revised February 2006

FACILITY NAME:	**Hopewell Cogeneration Facility**		PERMIT NO.:	VA0079502	
FACILITY ADDRESS:	1114 Hercules Road, Hopewell, VA 23860				
FACILITY REPRESENTATIVE:	Chuck Barnes	CONTACT INFORMATION:	804-458-0700		
INDUSTRIAL SECTOR:		SIC CODE:			
INSPECTOR:	Mike Dare	INSPECTION DATE and TIME on site:	2/4/09 0900 – 1330 hrs.	UNANNOUNCED? (N)	
REVIEWER:				PHOTOS? (Y)	

I. RECORDS

STORMWATER POLLUTION PREVENTION PLAN (SWPPP)	(Y or N)	NOTES
Pollution prevention team identified and up-to-date?	**Y**	
Site location and drainage map?	**Y**	
Material inventory?	**Y**	
Information regarding Spills & Leaks?	**Y**	
Information addressing SARA Title III Section 313 Chemicals?	***Y**	***See "General Recommendations"**
Non-Storm Water Discharges?	**Y**	
Best Management Practices (BMP)?	**Y**	
Good Housekeeping measures?	**Y**	
Spill Prevention and Response?	**Y**	
Sediment erosion control and runoff?	**Y**	
New and continued employee training?	**Y**	
Certification statement?	**Y**	

MONITORING	(Y or N)	NOTES
Stormwater quarterly visual examinations present and complete?	**Y**	
Stormwater annual Comprehensive Site Compliance Evaluation present and complete, and have the required Certification Statement?	**Y**	**Performed quarterly in-house; performed annually by outside auditor**
Are stormwater samples analyzed annually?	**Y**	
• Do stormwater event records include all required information? **[Part I.2.c. & d.]**	**Y**	
• List stormwater sampling parameters.	**Flow, Total Recoverable: Zinc, Copper, Iron**	
• Are stormwater samples collected properly (e.g. storm event, preservation)?	**Y**	
• Are stormwater DMRs completed and handled according to permit requirements?	**Y**	
• Are the stormwater sampling results in compliance with the benchmark monitoring cutoff concentrations?	****N/A**	****No cutoff concentrations with current permit**
• If sampling benchmark monitoring cutoff concentrations were exceeded were corrective actions (including review/revision of SWPPP) taken and documented?	****N/A**	
Chain of Custody: sample date and time, location, collector, required tests?	**Y**	

MONITORING	(Y or N)	NOTES
Certificate of Analysis: analysis date and time, test methods, analysts name, results	**Y**	
Name of Contract Lab?		**Reed and Associates**
Are records maintained for at least three years?	**Y**	

II. FIELD OBSERVATIONS

SITE CONDITIONS	(Y or N)	NOTES
Is there vehicle maintenance on-site?	**N**	
• Are the associated fluids (oils, fuels, etc) disposed of properly (i.e. not leaking onto the ground or into surface waters)?	**N/A**	
Are chemicals and other materials handled, disposed of, or stored so as to prevent a discharge into surface waters?	**Y**	
If the stormwater discharge enters a municipal separate storm sewer system to surface waters, has the permittee notified the owner of the system?	**N/A**	
Does the facility discharge process waters (wastewaters, SW commingled with any wastewaters, etc)?	**N**	
EFFLUENT DATA	**(Y or N)**	**NOTES**
List number of outfalls onsite:	**One**	
Are all outfalls addressed in the registration statement and is each located to provide representative sampling of the discharge?	**Y**	
Condition of effluent (clear, turbid, floating solids, foam, odor, etc.):	**No stormwater discharge at time of inspection**	
Condition of receiving stream (also note any upstream and downstream differences):	**No industrial impact noted at receiving stormwater ditch**	
Samples collected during inspection:	**N**	

General Recommendations

The section in the SWPPP addressing SARA Title III Section 313 chemicals appears to include materials not required to be in this section. Please investigate and remove materials inappropriately included in this section.

Compliance Recommendations

None

Attachment D:

WET Information (Outfall 001 & Outfall 002)

Spreadsheet for determination of WET test endpoints or WET limits

Excel 97
Revision Date: 01/10/05
File: WETLIM10.xls
(MIX.EXE required also)

Acute Endpoint/Permit Limit — **Use as LC_{50} in Special Condition, as TUa on DMR**

ACUTE	11.5727757	TUa	LC_{50} =	9	%	Use as	11.11	TUa

ACUTE WLAa 13.0903448

Note: Inform the permittee that if the mean of the data exceeds this TUa: 3.25164183 a limit may result using WLA.EXE

Chronic Endpoint/Permit Limit — **Use as NOEC in Special Condition, as TUc on DMR**

CHRONIC	63.81868983	TU_c	NOEC =	2	%	Use as	50.00	TU_c
BOTH*	72.18740763	TU_c	NOEC =	2	%	Use as	50.00	TU_c
AML	63.81868983	TU_c	NOEC =	2	%	Use as	50.00	TU_c

ACUTE WLAa,c 72.1874059
CHRONIC WLAc 43.6344828
* Both means acute expressed as chronic

Note: Inform the permittee that if the mean of the data exceeds this TUc: 26.2259505 a limit may result using WLA.EXE

Enter data in the cells with blue type:

Entry Date:	02/11/10	
Facility Name:	Hopewell Cogeneration	
VPDES Number:	VA0079502	
Outfall Number:	001	
Plant Flow:	1.45	MGD
Acute 1Q10:	61.82	MGD
Chronic 7Q10:	61.82	MGD

% Flow to be used from MIX.EXE

Acute	100	%
Chronic	100	%

Difuser /modeling study?

Enter Y/N	N	
Acute	1	:1
Chronic	1	:1

Are data available to calculate CV? (Y/N)	N	(Minimum of 10 data points, same species, needed)	Go to Page 2
Are data available to calculate ACR? (Y/N)	Y	(NOEC<LC50, do not use greater/less than data)	Go to Page 3

IWC_a	2.29176545	%	Plant flow/plant flow + 1Q10
IWC_c	2.29176545	%	Plant flow/plant flow + 7Q10

NOTE: If the IWCa is >33%, specify the NOAEC = 100% test/endpoint for use

Dilution, acute	43.63448276	100/IWCa
Dilution, chronic	43.63448276	100/IWCc

WLA_a	13.09034483	Instream criterion (0.3 TUa) X's Dilution, acute
WLA_c	43.63448276	Instream criterion (1.0 TUc) X's Dilution, chronic
$WLA_{a,c}$	72.18740586	ACR X's WLA_a - converts acute WLA to chronic units

ACR -acute/chronic ratio	5.514553421		LC50/NOEC (Default is 10 - if data are available, use tables Page 3)
CV-Coefficient of variation	0.6		Default of 0.6 - if data are available, use tables Page 2)
Constants	eA	0.4109447	Default = 0.41
	eB	0.6010373	Default = 0.60
	eC	2.4334175	Default = 2.43
	eD	2.4334175	Default = 2.43 (1 samp) No. of samples 1

****The Maximum Daily Limit is calculated from the lowest LTA, X's eC. The LTAa,c and MDL using it are driven by the ACR.**

$LTA_{a,c}$	29.66503184	WLAa,c X's eA						
LTA_c	26.2259517	WLAc X's eB					Rounded NOEC's	%
MDL** with $LTA_{a,c}$	72.18740763	TU_c	NOEC =	1.385283	(Protects from acute/chronic toxicity)		NOEC =	2 %
MDL** with LTA_c	63.81868983	TU_c	NOEC =	1.566939	(Protects from chronic toxicity)		NOEC =	2 %
AML with lowest LTA	63.81868983	TU_c	NOEC =	1.566939	Lowest LTA X's eD		NOEC =	2

IF ONLY ACUTE ENDPOINT/LIMIT IS NEEDED, CONVERT MDL FROM TU_c to TU_a

						Rounded LC50's	%
MDL with $LTA_{a,c}$	13.09034515	TU_a	LC50 =	7.639218	%	LC50 =	8 %
MDL with LTA_c	11.5727757	TU_a	LC50 =	8.640969	%	LC50 =	9

Page 2 - Follow the directions to develop a site specific CV (coefficient of variation)

IF YOU HAVE AT LEAST 10 DATA POINTS THAT ARE QUANTIFIABLE (NOT "<" OR ">") FOR A SPECIES, ENTER THE DATA IN EITHER COLUMN "G" (VERTEBRATE) OR COLUMN "J" (INVERTEBRATE). THE 'CV' WILL BE PICKED UP FOR THE CALCULATIONS BELOW. THE DEFAULT VALUES FOR eA, eB, AND eC WILL CHANGE IF THE 'CV' IS ANYTHING OTHER THAN 0.6.

Coefficient of Variation for effluent tests

CV = 0.6 (Default 0.6)

δ^2 = 0.3074847

δ = 0.554513029

Using the log variance to develop eA

(P. 100, step 2a of TSD)

Z = 1.881 (97% probability stat from table

A = -0.88929666

eA = 0.410944686

Using the log variance to develop eB

(P. 100, step 2b of TSD)

δ_4^2 = 0.086177696

δ_4 = 0.293560379

B = -0.50909823

eB = 0.601037335

Using the log variance to develop eC

(P. 100, step 4a of TSD)

δ^2 = 0.3074847

δ = 0.554513029

C = 0.889296658

eC = 2.433417525

Using the log variance to develop eD

(P. 100, step 4b of TSD)

n = 1 This number will most likely stay as "1", for 1 sample/month.

δ_n^2 = 0.3074847

δ_n = 0.554513029

D = 0.889296658

eD = 2.433417525

	F	G	H	I	J	K
		Vertebrate IC_{25} Data or LC_{50} Data	LN of data		Invertebrate IC_{25} Data or LC_{50} Data	LN of data
		**********			**********	
	1			1	0	
	2			2		
	3			3		
	4			4		
	5			5		
	6			6		
	7			7		
	8			8		
	9			9		
	10			10		
	11			11		
	12			12		
	13			13		
	14			14		
	15			15		
	16			16		
	17			17		
	18			18		
	19			19		
	20			20		
St Dev	NEED DATA	NEED DATA	St Dev	NEED DATA	NEED DATA	
Mean	0	0	Mean	0	0	
Variance	0	0.000000	Variance	0	0.000000	
CV	0		CV	0		

Page 3 - Follow directions to develop a site specific ACR (Acute to Chronic Ratio)

To determine Acute/Chronic Ratio (ACR), insert usable data below. Usable data is defined as valid paired test results, acute and chronic, tested at the same temperature, same species. The chronic NOEC must be less than the acute LC_{50}, since the ACR divides the LC_{50} by the NOEC. LC_{50}'s >100% should not be used.

Table 1. ACR using Vertebrate data

Set #	LC_{50}	NOEC	Test ACR	Logarithm	Geomean	Antilog	ACR to Use
1	#N/A	#N/A	#N/A	#N/A	#N/A	#N/A	NO DATA
2	#N/A	#N/A	#N/A	#N/A	#N/A	#N/A	NO DATA
3	#N/A	#N/A	#N/A	#N/A	#N/A	#N/A	NO DATA
4	#N/A	#N/A	#N/A	#N/A	#N/A	#N/A	NO DATA
5	#N/A	#N/A	#N/A	#N/A	#N/A	#N/A	NO DATA
6	#N/A	#N/A	#N/A	#N/A	#N/A	#N/A	NO DATA
7	#N/A	#N/A	#N/A	#N/A	#N/A	#N/A	NO DATA
8	#N/A	#N/A	#N/A	#N/A	#N/A	#N/A	NO DATA
9	#N/A	#N/A	#N/A	#N/A	#N/A	#N/A	NO DATA
10	#N/A	#N/A	#N/A	#N/A	#N/A	#N/A	NO DATA
				ACR for vertebrate data:			0

Table 1. Result:	Vertebrate ACR 0
Table 2. Result:	Invertebrate ACR 5.514553421
	Lowest ACR 5.514553421

Table 2. ACR using Invertebrate data

Set #	LC_{50}	NOEC	Test ACR	Logarithm	Geomean	Antilog	ACR to Use
1	35.4	12.5	2.832	1.0409832	1.040983176	2.832	0
2	35.4	2	17.7	2.8735646	1.72954689	5.63809865	0
3	66	12.5	5.28	1.6639261	1.707390674	5.51455342	5.514553421
4	#N/A	#N/A	#N/A	#N/A	#N/A	#N/A	NO DATA
5	#N/A	#N/A	#N/A	#N/A	#N/A	#N/A	NO DATA
6	#N/A	#N/A	#N/A	#N/A	#N/A	#N/A	NO DATA
7	#N/A	#N/A	#N/A	#N/A	#N/A	#N/A	NO DATA
8	#N/A	#N/A	#N/A	#N/A	#N/A	#N/A	NO DATA
9	#N/A	#N/A	#N/A	#N/A	#N/A	#N/A	NO DATA
10	#N/A	#N/A	#N/A	#N/A	#N/A	#N/A	NO DATA
				ACR for vertebrate data:			5.514553421

Convert LC_{50}'s and NOEC's to Chronic TU's for use in WLA.EXE

Table 3. ACR used: **5.5145534**

	Enter LC_{50}	TUc	Enter NOEC	TUc
1	100	5.514553	12.5	8.000000
2	66	8.355384	2	50.000000
3	100	5.514553	12.5	8.000000
4	92.6	5.955241	27	3.703704
5	35.4	15.577835	7.3	13.698630
6		NO DATA		NO DATA
7		NO DATA		NO DATA
8		NO DATA		NO DATA
9		NO DATA		NO DATA
10		NO DATA		NO DATA
11		NO DATA		NO DATA
12		NO DATA		NO DATA
13		NO DATA		NO DATA
14		NO DATA		NO DATA
15		NO DATA		NO DATA
16		NO DATA		NO DATA
17		NO DATA		NO DATA
18		NO DATA		NO DATA
19		NO DATA		NO DATA
20		NO DATA		NO DATA

If WLA.EXE determines that an acute limit is needed, you need to convert the TUc answer you get to TUa and then an LC50,

enter it here: NO DATA %LC_{50}

NO DATA TUa

DILUTION SERIES TO RECOMMEND

Table 4.

	Monitoring % Effluent	Monitoring TUc	Limit % Effluent	Limit TUc
Dilution series based on data mean	3.8	26.22595		
Dilution series to use for limit			2	50
Dilution factor to recommend:	0.1952695		0.1414214	
Dilution series to recommend:	100.0	1.00	100.0	1.00
	19.5	5.12	14.1	7.07
	3.8	26.23	2.0	50.00
	0.7	134.31	0.3	353.55
	0.15	687.80	0.0	2500.00
Extra dilutions if needed	0.03	3522.31	0.0	17677.67
	0.01	18038.22	0.0	125000.00

Cell: I9
Comment:
This is assuming that the data are Type 2 data (none of the data in the data set are censored - "<" or ">").

Cell: K18
Comment: This is assuming that the data are Type 2 data (none of the data in the data set are censored - "<" or ">").

Cell: J22
Comment: Remember to change the "N" to "Y" if you have ratios entered, otherwise, they won't be used in the calculations.

Cell: C40
Comment:
If you have entered data to calculate an ACR on page 3, and this is still defaulted to "10", make sure you have selected "Y" in cell E21

Cell: C41
Comment: If you have entered data to calculate an effluent specific CV on page 2, and this is still defaulted to "0.6", make sure you have selected "Y" in cell E20

Cell: L48
Comment:
See Row 151 for the appropriate dilution series to use for these NOEC's

Cell: G62
Comment:
Vertebrates are:
Pimephales promelas
Oncorhynchus mykiss
Cyprinodon variegatus

Cell: J62
Comment:
Invertebrates are:
Ceriodaphnia dubia
Mysidopsis bahia

Cell: C117
Comment: Vertebrates are:

Pimephales promelas
Cyprinodon variegatus

Cell: M119
Comment: The ACR has been picked up from cell C34 on Page 1. If you have paired data to calculate an ACR, enter it in the tables to the left, and make sure you have a "Y" in cell E21 on Page 1. Otherwise, the default of 10 will be used to convert your acute data.

Cell: M121
Comment: If you are only concerned with acute data, you can enter it in the NOEC column for conversion and the number calculated will be equivalent to the TUa. The calculation is the same: 100/NOEC = TUc or 100/LC50 = TUa.

Cell: C138
Comment: Invertebrates are:

Ceriodaphnia dubia
Mysidopsis bahia

2/17/2010 3:56:36 PM

Facility = Hopewell Cogeneration (VA0079502)
Chemical = Toxicity - C.dubia
Chronic averaging period = 4
WLAa = 72.19
WLAc = 43.63
Q.L. = 1
# samples/mo. = 1
# samples/wk. = 1

Summary of Statistics:

observations = 9
Expected Value = 12.0824
Variance = 52.5547
C.V. = 0.6
97th percentile daily values = 29.4016
97th percentile 4 day average = 20.1026
97th percentile 30 day average= 14.5720
< Q.L. = 0
Model used = BPJ Assumptions, type 2 data

No Limit is required for this material

The data are:

8
50
8
3.704
13.7
5.514
8.355
5.514
5.955

Kazio,Jeremy

From: DeBiasi,Deborah
Sent: Monday, September 14, 2009 11:44 AM
To: Kazio,Jeremy
Subject: RE: Hopewell Cogneration (VA0079502) - WET Concurrence
Attachments: Hopewell cogen.txt

Jeremy,

Thanks for providing a very useful synopsis. Too often I don't get background info and it makes it hard to make a good decision.

When you are looking at the data via stats, you have to evaluate the species separately. In this case, the C. dubia showed more problems than the P. promelas, so I only ran the invertebrate. If it doesn't show any problems, then the P. promelas most likely won't either.

Using the table in WETLIM, you get this which allows you to use the acute data converted to TUc's with the ACR, with the chronic TUc data. You did all this right, but needed to only do it for one species at a time.

Convert LC_{50}'s and NOEC's to Chronic TU's

for use in WLA.EXE

Table 3. **ACR used: 5.5145534**

	Enter LC_{50}	TUc	Enter NOEC	TUc
1	100	5.514553	12.5	8.000000
2	66	8.355384	2	50.000000
3	100	5.514553	12.5	8.000000
4	92.6	5.955241	27	3.703704
5	35.4	15.577835	7.3	13.698630
6		NO DATA		NO DATA

Using just the invertebrate data in STATS, it looks like this:

9/14/2009 11:21:40 AM

Facility = Hopewell cogen
Chemical = toxicity - C. dubia
Chronic averaging period = 4
WLAa = 68.54
WLAc = 41.43
Q.L. = 1
# samples/mo. = 1
# samples/wk. = 1

Summary of Statistics:

observations = 10
Expected Value = 11.9192

Variance = 102.517
C.V. = 0.849475
97th percentile daily values = 36.3406
97th percentile 4 day average = 23.6005
97th percentile 30 day average= 15.3964
< Q.L. = 0
Model used = lognormal

No Limit is required for this material

The data are: (first 5 are chronic C. dubia tests, other 5 are acute C. dubia tests)

8
50
8
3.704
13.7
5.514
8.355
5.514
5.955
15.578

The end result is the same as what you got, in that no limit is required.

I made just a couple of changes in the TMP you have in your email below, in different colored font. Let me know if you have any questions! I'm here all week as far as I know.

Deborah L. DeBiasi
Email: Deborah.DeBiasi@deq.virginia.gov ***(NEW!)***
PH: 804-698-4028

From: Kazio,Jeremy
Sent: Monday, September 14, 2009 10:57 AM
To: DeBiasi,Deborah
Subject: Hopewell Cogneration (VA0079502) - WET Concurrence

Hi Deborah,

I know that we normally do the whole concurrence memo thing, but in the interest of saving you from reading a full story on this facility (I know that you've very busy), I am just going to send you a slimmed down version of what you need via this email in order to do a WET concurrence. If you'd rather have the memo, then it's not a problem, just let me know.

This facility is called Hopewell Cogeneration, Inc. and they're a duel fuel (diesel & natural gas) steam electric generator located in Hopewell. They have two discharging outfalls (001 & 002), they are an E3 facility, and they pipe leftover steam across the road to Hercules Aqualon, Inc.

Flows from Outfall 002 are strictly storm water. Flows from **Outfall 001** have contributions from internal Outfalls 101 & 102. Internal Outfall 102 is boiler blowdown, low volume wastes, storm water, demineralizer wastes, neutralization wastes, and gas turbine wash water (NOT metal washing though). Internal Outfall 101 is cooling tower blowdown.

WET monitoring was required in the 2004 permit re-issuance for **Outfall 001**. This outfall discharges to Gravelly Run, which flows into the James River. Previous permit re-issuances took a somewhat unorthodox method of attaining ambient flows for this facility because of another facility's discharge to

Gravelly Run (Honeywell International). This other facility discharges at a very high rate and it's flows basically comprise Gravelly Run's flows. So, what has been done in the past, AND for this re-issuance, is the other facility's flows were used as the ambient flows for Hopewell Cogeneration. Because of this, both 7Q10 and 1Q10 used in WETLIM are the same, which for the 2009 permit re-issuance is 58.62 MGD.

Please see the below chart for results of the 2004 permit monitoring, and the 2004 permit endpoints that were required.

	WET Monitoring - Outfal							
	Chronic Tests							
	Invertebrate: Chronic 3-brood static renewal - *C.dubia*				Vertebrate: Chronic 7-day static renewal *P.promelas*			
	%NOEC (Survival)	%NOEC (Reproduction or Growth)	TUc	%LC50 @ 48 hours	%NOEC (Survival)	%NOEC (Reproduction or Growth)	TUc	%L
2004 Required Endpoint →	**2%**	**2%**	**50**	**NA**	**2%**	**2%**	**50**	**N**
2004	25	12.5	8	35.4	100	100	1	>1
2005	25	2	50	35.4	100	100	1	>1
2005	50	12.5	8	66	100	100	1	>1
2007	100	27	3.7	>100	100	100	1	>1
2008	27	7.3	13.7	>100	100	27	3.7	>1
	Average TUc		16.68		Average TUc		1.54	

I've utilized WETLIM10 to attain WLA_a and $WLA_{a,c}$ and to attain the TUa → TUc conversion in order to enter the monitoring results into STATS. WETLIM10 is attached to this email. The results of the STATS evaluation is printed below.

```
9/14/2009 8:11:52 AM

 Facility  = Hopewell Cogeneration
 Chemical  = WET Testing
 Chronic averaging period =  4
 WLAa     =  68.53
 WLAc     =  41.4
 Q.L.       = 1
 # samples/mo. = 1
 # samples/wk. = 1

 Summary of Statistics:

 # observations = 24
 Expected Value =  5.75485
 Variance       =  86.3437
 C.V.           = 1.614659
 97th percentile daily values  =  25.5111
 97th percentile 4 day average =  16.9734
```

```
97th percentile 30 day average=  8.94598
# < Q.L.        =  0
Model used      = lognormal

 No Limit is required for this material

The data are:

 8.3
 6
 15.6
 6.5
 4
 4
 2
 1
 3.7
 8
 50
 8
 3.7
 13.7
 1
 1
 1
 1
 1
 1
 1
 1
 1
 3.7
```

I planned to re-use the 2004 language for the 2009 permit re-issuance and just change the endpoints in accordance with the new WETLIM evaluation. Is this OKAY with you? :

C. Whole Effluent Toxicity (WET) Monitoring Program

1. In accordance with the schedule in Part I.C.2 below, the permittee shall conduct annual acute and chronic toxicity tests for the duration of the permit. The permittee shall collect 24-hour time proportioned composite samples of final effluent from outfall 001.

a. The acute tests to use are:

(1) 48 Hour Static Acute Test using *Ceriodaphnia dubia*, and
(2) 48 Hour Static Acute Test using *Pimephales promelas*.

These acute tests shall be performed with a minimum of 5 dilutions derived geometrically, for calculation of a valid LC_{50}. Express the results as TU_a (Acute Toxic Units) by dividing $100/LC_{50}$ for DMR reporting.

b. The chronic tests to use are:

(1) Chronic 3-Brood Static Renewal Survival and Reproduction Test using *Ceriodaphnia dubia,* and
(2) Chronic 7 Day Static Renewal Survival and Growth Test using *Pimephales promelas.*

These chronic tests shall be conducted in such a manner and at sufficient dilutions (minimum of five dilutions, derived geometrically) to determine the "No Observed Effect Concentration" (NOEC) for survival and reproduction or growth. Results which cannot be determined (i.e., a "less than" NOEC value) are not acceptable, and a retest will have to be performed. Express the test NOEC results at TU_c (Chronic Toxic Units), by dividing 100/NOEC for DMR reporting. Report the LC_{50} at

48 hours and the IC_{25} with the NOEC's in the test report.

c. The permittee may provide additional samples to address data variability ~~during the period of initial data generation~~. These data shall be reported and may be included in the evaluation of effluent toxicity. Test procedures and reporting shall be in accordance with the WET testing methods cited in 40CFR 136.3.

d. The test dilutions should be able to determine compliance with the following endpoints:

(1) **Acute LC_{50} of ~~6%~~ 10% equivalent to a TU_a of ~~16.7~~ 10 and**

(2) **Chronic NOEC of ~~2%~~ 2% equivalent to a TU_c of ~~50.0~~ 50%**

e. The test data will be evaluated by STATS.EXE for reasonable potential at the conclusion of the test period. The data may be evaluated sooner if requested by the permittee, or if toxicity has been noted. Should evaluation of the data indicate that a limit is needed, a WET limit and compliance schedule will be required and the toxicity tests of 1.a. may be discontinued.

f. The permit may be modified or revoked and reissued to include pollutant specific limits in lieu of a WET limit should it be demonstrated that toxicity is due to specific parameters. The pollutant specific limits must control the toxicity of the effluent.

2. Reporting Schedule: The permittee shall report the results on the DMR and supply 1 copy of the toxicity test reports specified in this Whole Effluent Toxicity Monitoring Program in accordance with the following schedule:

Period	Compliance Periods	DMR/Report Due Date
1st Annual	12/31/2009	1/10/2010
2nd Annual	12/31/2010	1/10/2011
3rd Annual	12/31/2011	1/10/2012
4th Annual	12/31/2012	1/10/2013
5th Annual	12/31/2013	1/10/2014

Kazio,Jeremy

From: DeBiasi,Deborah
Sent: Thursday, September 17, 2009 1:17 PM
To: Kazio,Jeremy
Subject: RE: Hopewell Cogeneration (VA0079502) - Storm Water Toxicity Screening

I need to talk to Fred Cunningham about this stormwater testing issue, but in the interim, here is the language (I just gave to Elleanore add into the permit manual, too) to add in for this particular section you can use:

b. Toxicity Screening.
With the exception noted in 1.d below, the permittee shall conduct **annual acute toxicity tests** on the outfalls noted in a above using grab samples of the discharge from the storm water outfall. These acute screening tests shall be 48-hour static tests using ***Ceriodaphnia dubia*** **and** ***Pimephales promelas***, conducted in such a manner and at sufficient dilutions for calculation of a valid LC_{50}. The tests shall be conducted on a calendar year basis with one copy of all results and all supporting information submitted with the annual report due by **[*February 10th*]** of each year. **Test procedures and reporting shall be in accordance with the WET testing methods cited in 40 CFR 136.3**. **Additional** technical assistance in developing the procedures for these tests will be provided by the Department of Environmental Quality (DEQ), if requested by the permittee. If any of the biological tests are invalidated, an additional test shall be conducted within thirty (30) days of notification. If there is no discharge during this 30-day period, a sample must be taken during the first qualifying discharge.

Deborah L. DeBiasi
Email: Deborah.DeBiasi@deq.virginia.gov ***(NEW!)***
PH: 804-698-4028

From: Kazio,Jeremy
Sent: Thursday, September 17, 2009 9:05 AM
To: DeBiasi,Deborah
Subject: Hopewell Cogeneration (VA0079502) - Storm Water Toxicity Screening

Hi again,

I'm sorry for not including this before, but I have a question regarding the same (subject) facility as earlier this week.

This facility has an Outfall 002 which is solely storm water and discharges to a UT of Gravelly Run. Statistical low flows (1Q10 and 7Q10) are considered "ZERO". I don't know why, but in 2004 this facility tested for all parameters contained in Attachment A at their storm water outfall 002. We didn't require this, so I guess they did it because they thought it would be a good gesture towards maintaining their E3 status. Anyway, due to that large amount of testing, they got "hits" on Copper and Zinc, and therefore monitoring for these parameters was placed in the 2004 permit. Also, this facility's SIC code places them into Sector O of DEQ's storm water policy. Therefore, they also have benchmark monitoring for Iron.

So I did the screening that we normally do for storm water effluent, which is compare the reported values to 2X the acute Water Quality Criteria. In accordance with the permitting manual (Section IN-4), the screening results are prompting a need for toxicity screening from this storm water outfall. The new permitting manual language developed by Burt Tuxford and Ellenore Daub, **has the below language that is to be placed into storm water special conditions language for facilities which need storm water toxicity screening**.

b. Toxicity Screening.
With the exception noted in 1.d below, the permittee shall conduct **annual acute toxicity tests** using grab sample of the discharge collected by the permittee from the outfalls noted in Part I.D.1.a. above. These acute screening tests shall be 48-hour static tests using ***ENTER SPECIES HERE***, conducted in such a manner and at sufficient dilutions for calculation of a valid LC_{50}. The tests shall be conducted on a calendar year basis with one copy of all results and all supporting information submitted with the annual report due **by February 10th** of each year. Technical assistance in developing the procedures for these tests will be provided by the

Attachment E:

Hopewell Cogeneration (VA0079502) Effluent Data for All Outfalls

Hopewell Cogeneration DMR Data for Outfalls 001, 101, & 102 - August 2004 - December 2008

DMR Received ↓	Outfall 001						Outfall 101				Outfall 102					
Parameter / Units →	Flow (MGD)		Temperature (°C)	pH (SU)	Total Phosphorus		Flow (MGD)		Free Available Chlorine (mg/L)		Flow (MGD)		TSS (mg/L)		Oil & Grease (mg/L)	
	Monthly Average	Maximum			Monthly Average (mg/L)	Loading (kg/d)	Monthly Average	Maximum	Monthly Average	Maximum	Monthly Average	Maximum	Monthly Average (mg/L)	Loading (kg/d)	Maximum (mg/L)	Loading (kg/d)
2004-2009 Limit or Endpoint →	**NL**	**NL**	**75°C**	**6.0-9.0 SU**	**2.0 mg/L**	**NL**	**NL**	**NL**	**0.2 mg/L**	**0.5 mg/L**	**NL**	**NL**	**30 mg/L**	**100 mg/L**	**20 mg/L**	**NL**
4-Aug-04	0.79	2.25	44.7	7.31	0.22	0.03	0.32	1.67	0.18	0.18	0.47	0.97	1.02	0.4	2.55	<1.0
3-Sep-04	0.96	3.75	43.9	7.67	0.27	0.88	0.48	2.77	0.16	0.16	0.47	1.24	13.65	4.5	3.03	<1.0
6-Oct-04	0.48	1.93	43.9	7.09	0.41	0.38	0.19	1.41	0.18	0.18	0.28	0.93	0.02	0.1	1.01	<5.0
3-Nov-04	0.13	0.93	49.3	7.55	0.3	1.05	0.04	0.58	0.04	0.04	0.09	0.58	0.09	0.9	0.52	<5
8-Dec-04	0.12	0.64	23	7.93	0.28	0.1	0.05	0.55	0.02	0.02	0.07	0.35	3.59	10.4	1.72	<5
10-Jan-05	0.13	0.88	46.9	7.28	0.28	0.11	0.03	0.42	0.018	0.018	0.09	0.09	0.84	3.7	1.13	<5
4-Feb-05	0.64	2.3	44.7	7.62	0.46	0.07	0	0.03	0.028	0.028	0.64	2.29	0.08	0.4	0.95	<5
2-Mar-05	0.18	1.83	34.5	7.47	0.69	4.77	0.05	1.48	0.05	0.05	0.13	0.64	18.35	22.5	4.08	<5
5-Apr-05	0.26	1.62	57.2	6.99	0.62	1.47	0.01	0.37	0.09	0.09	0.25	1.61	58.16	11.98	24.28	<5
10-May-05	0.16	0.87	33.5	6.79	0.46	0.1	0	0.01	0.14	0.14	0.16	0.87	1.35	4.7	1.44	<5
8-Jun-05	0.06	0.14	59.7	7.76	0.57	0.29	--	NULL	0.015	0.02	0.06	0.14	0.83	1.6	2.59	<5
7-Jul-05	0.95	2.18	38.6	7.22	0.42	0.1	0.01	0.03	0.01	0.01	0.94	2.18	0.82	5.5	0.75	5
10-Aug-05	1.23	3.27	55.9	8.02	0.57	7.05	0.08	2.23	0.13	0.13	1.15	2.12	0.32	1.2	1.35	<5
6-Sep-05	1.21	1.99	55.8	8.15	0.62	2.89	0.01	0.14	0.14	0.14	1.2	1.98	9.33	2.3	20.29	<5
11-Oct-05	1.02	5.3	47.8	8.43	0.67	13.45	0.11	3.1	0.18	0.18	0.91	2.2	15.49	3.7	20.93	<5
4-Nov-05	0.11	0.82	25.2	6.86	0.39	0.06	0	0.01	0.13	0.13	0.11	0.81	3.44	1.3	13.23	<5
7-Dec-05	0.08	0.84	39.1	7.1	0.35	0.04	0.02	0.76	0.18	0.18	0.05	0.08	1.67	12.44	1.07	8
6-Jan-06	0.51	1.6	50	7.31	1.25	0.23	0	0.05	0.19	0.19	0.51	1.6	17.38	9.2	9.45	<5.0
9-Feb-06	0.07	0.53	43.4	6.54	0.4	0.09	0	0	0.14	0.14	0.07	0.53	3.71	19	0.98	5
7-Mar-06	0.19	1.39	33.3	7.34	0.2	0.04	0	0.01	0.03	0.03	0.19	1.38	1.77	11	0.8	<5
5-Apr-06	0.23	1.39	34.1	7.87	0.33	0.08	0	0.01	0.04	0.04	0.23	1.39	0.77	5	0.77	<5
3-May-06	0.2	1.07	29.9	7.5	0.59	0.06	0	0	0.08	0.08	0.2	1.07	0.06	0.4	0.72	<5
5-Jun-06	0.15	1.08	44.8	7.57	1.13	0.09	0	0	0.06	0.06	0.15	1.07	0.83	3	1.38	<5
7-Jul-06	0.89	2.08	59.1	7.38	0.47	1.1	0.02	0.42	0.02	0.02	0.87	2.07	5.25	<1.0	26.25	<5.0
2-Aug-06	1.21	2.37	55.7	7.47	0.54	2.48	0.02	0.36	0.1	0.1	1.19	2.33	15.61	4	19.51	<5.0
11-Sep-06	1.34	5.26	37.9	8.73	0.5	9.96	0.1	2.74	0.03	0.03	1.24	3.21	48.65	4	60.81	<5.0
10-Oct-06	0.04	0.15	38.3	7.22	0.2	0.11	0	NULL	0.11	0.11	0.04	0.06	0.48	4	0.6	<5.0
3-Nov-06	0.47	2.13	33.2	7.27	0.31	0.01	0	0.05	0.11	0.11	0.47	2.09	1.59	6	1.32	<5.0
10-Dec-06	0.12	1.18	53.9	7.67	0.43	0.09	0	0.01	0.02	0.02	0.12	1.18	2.69	14	0.96	<5.0
10-Jan-07	0.06	0.57	37.2	7.46	0.66	0.13	0	0	0.04	0.04	0.06	0.56	3.22	14	1.15	<5.0
14-Aug-00	0.54	2.35	28.4	7.19	0.51	0.06	0	0.03	0.01	0.01	0.54	2.33	3.54	14	1.26	5
2-Mar-07	1.45	2.92	46.7	7.31	0.67	5.5	0.02	0.39	0.11	0.11	1.43	2.9	4.36	2	10.89	<5
2-Apr-07	0.05	0.11	35.6	7.59	0.6	0.16	NULL	NULL	NULL	NULL	0.05	0.11	1.21	10	0.6	<5
3-May-07	0.1	0.96	26.7	8.73	0.27	0.05	0	0.02	0.06	0.06	0.1	0.95	0.14	<1	0.69	<5
2-Jun-07	0.49	1.21	57.2	7.53	0.27	1.07	0	0.02	0.02	0.02	0.48	1.21	9.51	4	11.89	<5
2-Jul-07	0.71	2.07	54.4	7.53	0.67	5.26	0.03	0.87	0.05	0.05	0.67	1.31	0.24	1	1.18	<5
3-Aug-07	0.89	1.5	51.2	7.76	0.66	2.15	0.02	0.34	0.03	0.03	0.87	1.49	9.15	4	11.44	<5
4-Sep-07	1.28	2.35	36	8.69	0.5	2.88	0.02	0.47	0.03	0.03	1.25	2.34	32.27	6	26.89	<5
2-Oct-07	0.3	0.95	56.9	7.35	0.49	1.28	0.01	0.34	0.12	0.12	0.59	0.94	2.21	7	1.58	<5
2-Nov-07	0.64	1.87	52.8	8.21	0.36	0.81	0.04	1.04	0.03	0.03	0.06	1.42	17.75	5	17.75	<5
6-Dec-07	0.3	1.24	34.2	8.02	0.1	0.21	0	0.02	0.07	0.07	0.3	1.22	1.38	5	1.38	<5
3-Jan-08	0.47	1.7	26.5	8.52	0.58	1.97	0.02	0.42	0	0	0.46	1.67	1.44	1.2	5.99	<5.0
4-Feb-08	0.77	1.91	40.9	6.98	0.7	0.12	0.01	0.02	0.05	0.05	0.77	1.89	16.63	4	20.79	<5.0
3-Mar-08	0.47	1.87	20	8.5	0.35	0.33	0.01	0.16	0.04	0.04	0.46	1.86	0.57	3.2	0.89	<5
1-Apr-08	0.17	1.55	30.9	7.95	1.09	0.31	0	0.02	0.04	0.04	0.17	1.53	0.28	1.7	0.83	<5.0
1-May-08	0.23	1.19	33.3	7.3	0.76	0.11	0	0.01	0.18	0.18	0.23	1.18	1.23	6.3	0.98	<5
2-Jun-08	0.23	0.92	26.4	7.25	1.36	0.23	0	0.01	0.15	0.15	0.23	0.92	3.66	12	1.52	<5
2-Jul-08	0.95	2.02	38.9	7.56	0.8	2.68	0.02	0.49	0.06	0.06	0.92	2	21.63	8.1	13.35	<5.0
4-Aug-08	0.83	1.5	51.9	8.11	1.04	0.27	0.01	0.05	0.04	0.04	0.82	1.46	10.23	2.7	18.94	<5
2-Sep-08	0.77	1.39	55.6	7.89	0.48	1.84	0.01	0.06	0.05	0.05	0.76	1.37	14.02	3.7	18.94	<5.0
8-Oct-08	0.51	1.9	54.4	7.49	0.65	4.66	0.04	0.98	0.09	0.09	0.47	1.23	3.52	1.1	16.01	< 5.0
7-Nov-08	0.19	1.16	41	7.45	0.32	0.07	0	0.02	0.08	0.08	0.18	1.16	0.69	7.1	0.49	<5.0
8-Dec-08	0.42	1.38	33.4	7.16	0.76	0.07	0	0.02	0.08	0.08	0.41	1.35	0.19	1.1	0.86	<5.0
Maximum	**1.45**	**5.3**	**59.7**	**8.73**	**1.36**	**13.45**	**0.48**	**3.1**	**0.19**	**0.19**	**1.43**	**3.21**	**58.16**	**22.5**	**60.81**	**8**
90% tile	**1.172**	**2.366**	**55.88**	**8.386**	**0.792**	**4.748**	**0.08**	**1.499**	**0.178**	**0.178**	**1.108**	**2.272**	**17.676**	**12.44**	**20.69**	**7.1**
10% tile	**0.084**	**0.676**	**27.04**	**7.092**	**0.27**	**0.06**	**0**	**0.01**	**0.02**	**0.02**	**0.062**	**0.386**	**0.2**	**1**	**0.726**	**5**
Average	**0.50**	**1.67**	**42.03**	**7.60**	**0.54**	**1.50**	**0.04**	**0.50**	**0.08**	**0.08**	**0.46**	**1.35**	**7.30**	**5.71**	**7.75**	**5.75**

Note: Concentrations for TR Zinc, TR Chromium, and 126 Priority Pollutants applied to Outfall 101 have not been included in this sheet because these parameters were not tested or reported during the 2004-2009 permit cycle.

WET Monitoring - Outfall 001

	Chronic Tests								Acute Tests			
	Invertebrate: Chronic 3-brood static renewal - *C.dubia*				Vertebrate: Chronic 7-day static renewal - *P.promelas*				Invertebrate: Acute 48 hr static - *C.dubia*		Vertebrate: Acute 48 hr static - *P.promelas*	
	%NOEC (Survival)	%NOEC (Reproduction or Growth)	TUc	%LC50	%NOEC (Survival)	%NOEC (Reproduction or Growth)	TUc	%LC50	%LC50	TUa	%LC50	TUa
2004 Required Endpoint-->	**2%**	**2%**	**50**	**NA**	**2%**	**2%**	**50**	**NA**	**6%**	**16.7**	**6%**	**16.7**
2004	25	12.5	8	35.4	100	100	1	>100	>100	>1	>100	>1
2005	25	2	50	35.4	100	100	1	>100	66	1.52	>100	>1
2005	50	12.5	8	66	100	100	1	>100	>100	>1	>100	>1
2007	100	27	3.7	>100	100	100	1	>100	92.6	1.08	>100	>1
2008	27	7.3	13.7	>100	100	27	3.7	>100	35.4	2.82	85.2	1.17
	Average TUc		16.68		Average TUc		1.54		Average TUa	1.81	Average TUa	1.17

Hardness Values From WET Tests (mg/L) - Outfall 001

	Chronic Tests			Acute Tests
	Minimum	Maximum	Average	Value
2004	72	410	241	72
2005	530	580	555	530
2005	84	280	182	84
2007	210	380	295	210
2008	55	320	187.5	300

Minimum Hardness Value (mg/L)	**55**

Stormwater Data Reported in Form 2F - Hopewell Cogen
2009 Permit Re-Issuance

Outfall 002

Parameter	Maximum Values (collected 11/10/2007)		Average Values		Number of Storm Events Sampled
	Grab Sample	Flow Weighted Composite	Grab Sample	Flow Weighted Composite	
Oil & Grease (mg/L)	<5				1
Biological Oxygen Demand (mg/L)	<2				1
Chemical Oxygen Demand (mg/L)	<10				1
Total Suspended Solids (mg/L)	1.0				1
Total Nitrogen (mg/L)	1.9				1
Total Phosphorus (mg/L)	0.15				1
pH (SU)	6.97		7.29		16
Total Kjeldahl Nitrogen (mg/L)	0.51				1
Nitrate/Nitrite (mg/L)	1.37				1
Total Recoverable Copper (mg/L)	<0.005		0.067		15
Total Recoverable Zinc (mg/L)	0.213		0.39		15

Storm Event Date	October 27, 2007	November 10, 2007
Duration	3 Hours, 20 Minutes	1 Hour, 20 Minutes
Total Rainfall	0.25 inches	0.12 inches
Flow Rate	437.9 GPM	16.9 GPM
Total Flow	38786 Gallons	15014 Gallons

Note: The application 2F for the 2004 permit re-issuance for this facility included extensive stormwater testing, and included results for 132 pollutants. Eight (8) of these pollutants were reported at concentrations greater than the QL used for the test. These pollutants are listed below. The permit writer for the 2004 re-issuance evaluated the data by comparing test results to 2X the acute standard. The results of the evaluation concluded that monitoring was necessary for TR Copper and TR Zinc. Monitoring for TR Iron was also added to the 2004 permit due to attaining consistency with the industrial stormwater general permit (VAR05).

Parameter	Concentration	Acute Standard
TR Chromium	0.002 mg/L	0.032 mg/L
TR Copper	0.011 mg/L	0.007 mg/L
TR Nickel	0.006 mg/	0.112 mg/L
TR Zinc	0.570 mg/L	0.072 mg/L
Nitrogen	4.9 mg/L	N/A
Nitrate/Nitrite	1.44 mg/L	N/A
TKN	3.5 mg/L	N/A
Bis(2-ethylhexyl) phthalate	9 µg/L	No acute standard

DMR Data for Outfall 002:
October 2004 - December 2008

DMR Received Date	Event Flow (MGD)	Total Copper (mg/L)	Total Zinc (mg/L)	Total Iron (mg/L)
10/06/04	0.035	0.003	0.184	0.105
03/02/05	0.027	0.003	0.095	***
05/10/05	0.095	0.0039	0.055	***
08/10/05	0.028	0.721	0.034	10.6
12/07/05	0.17	0.005	0.476	***
02/09/06	0.069	0.024	0.629	***
05/03/06	0.036	0.017	0.417	***
08/02/06	0.05	0.011	0.345	0.685
12/10/06	0.05	0.016	0.344	***
02/12/07	0.069	0.007	0.236	***
05/09/07	0.158	0.035	0.642	***
08/16/07	0.06	0.14	1.3	***
09/11/07	***	***	***	3.91
12/17/07	0.015	<0.005	0.213	***
02/04/08	0.059	0.013	0.514	***
05/08/08	0.132	0.012	0.364	***
08/04/08	0.051	0.021	0.233	0.318
12/08/08	0.071	0.007	0.192	***
Averages	0.0691	0.065	0.369	3.124
Expected value		0.042	0.404	5.670

Note: The expected value (Ex) shown for each DMR parameter above is calculated using the following formula from GM00-2011 (Type 3 Data):

$$Ex = \exp(u_y + 0.5\sigma_y^2)$$

Where:

u_y = The mean of the log-transformed data

σ_y^2 = The variance of the log-transformed data

Hopewell Cogeneration (VA0079502): Outfall 001 Summary of Attachment A and 2C Test Results

METALS

CASRN#	CHEMICAL	EPA ANALYSIS USED	LAB QL (µg/L)	REQUIRED QL	REPORTING RESULTS (µg/L) Grab	REPORTING RESULTS (µg/L) Composite	REQUIRED SAMPLE TYPE
7440-36-0	Antimony, dissolved	200.7 *	5	NA	<5		G or C
7440-38-2	Arsenic, dissolved	200.7 *	5	NA	<5		G or C
7440-39-3	Barium, dissolved	200.7 *	5	NA	66		G or C
7440-43-9	Cadmium, dissolved	200.7 *	0.5	NA	0.6		G or C
16065-83-1	Chromium III, dissolved	200.7 *	3	NA	<3		G or C
18540-29-9	Chromium VI, dissolved	3500CrB *	3	NA	<3		G or C
7440-50-8	Copper, dissolved	200.7 *	5	NA	8		G or C
7439-89-6	Iron, dissolved	200.7 *	10	NA	19		G or C
7439-92-1	Lead, dissolved	200.7 *	5	NA	<5		G or C
7439-96-5	Manganese, dissolved	200.7 *	5	NA	11		G or C
7439-97-6	Mercury, dissolved	245.1 *	0.2	NA	<0.2		G or C
7440-02-0	Nickel, dissolved	200.7 *	5	NA	<5		G or C
7782-49-2	Selenium, dissolved	200.7 *	5	NA	<5		G or C
7782-49-2	Selenium, Total Recoverable	200.7 *	5	NA	<5		G or C
7440-22-4	Silver, dissolved	200.7 *	1	NA	<1		G or C
7440-28-0	Thallium, dissolved	200.7 *	5	NA	<5		G or C
7440-66-6	Zinc, dissolved	200.7 *	5	NA	25		G or C

PESTICIDES/PCB'S

CASRN#	CHEMICAL	EPA ANALYSIS USED	REQUIRED QUANTIFICATION LEVEL(µg/L)	REPORTING RESULTS (µg/L) Grab	REPORTING RESULTS (µg/L) Composite	REQUIRED SAMPLE TYPE
309-00-2	Aldrin	608	0.05	<0.05	<5 **	G or C
57-74-9	Chlordane	608	0.2	<0.2	<5 **	G or C
2921-88-2	Chlorpyrifos (synonym = Dursban)	622		<0.2		G or C
72-54-8	DDD	608	0.1	<0.05	<5 **	G or C
72-55-9	DDE	608	0.1	<0.05	<5 **	G or C
50-29-3	DDT	608	0.1	<0.05	<5 **	G or C
8065-48-3	Demeton	622*		<1		G or C
333-41-5	Diazinon		NOT REQUIRED			G or C
60-57-1	Dieldrin	608	0.1	<0.05	<5 **	G or C
959-98-8	Alpha-Endosulfan	608	0.1	<0.05	<5 **	G or C
33213-65-9	Beta-Endosulfan	608	0.1	<0.05	<5 **	G or C
1031-07-8	Endosulfan Sulfate	608	0.1	<0.05	<5 **	G or C
72-20-8	Endrin	608	0.1	<0.05	<5 **	G or C
7421-93-4	Endrin Aldehyde	608*		<0.05	<5 **	G or C
86-50-0	Guthion	622		<1		G or C
76-44-8	Heptachlor	608	0.05	<0.05	<5 **	G or C
1024-57-3	Heptachlor Epoxide	608*		<0.05	<5 **	G or C
319-84-6	Hexachlorocyclohexane Alpha-BHC	608		<0.05	<5 **	G or C
319-85-7	Hexachlorocyclohexane Beta-BHC	608		<0.05	<5 **	G or C
58-89-9	Hexachlorocyclohexane Gamma-BHC or Lindane	608		<0.05	<5 **	G or C
143-50-0	Kepone	8270C*		<5		G or C
121-75-5	Malathion	622*		<1		G or C
72-43-5	Methoxychlor	608*		<0.05		G or C
2385-85-5	Mirex	608*		<0.05		G or C
56-38-2	Parathion	622*		<1		G or C
11096-82-5	PCB 1260	608	1	<0.2	<5 **	G or C
11097-69-1	PCB 1254	608	1	<0.2	<5 **	G or C
12672-29-6	PCB 1248	608	1	<0.5	<5 **	G or C
53469-21-9	PCB 1242	608	1	<0.5	<5 **	G or C
11141-16-5	PCB 1232	608	1	<0.5	<5 **	G or C
11104-28-2	PCB 1221	608	1	<0.5	<5 **	G or C
12674-11-2	PCB 1016	608	1	<0.5	<5 **	G or C
1336-36-3	PCB Total	608	7	<2.9	<35 **	G or C
8001-35-2	Toxaphene	608	5	<0.5		G or C

BASE NEUTRAL EXTRACTABLES

CASRN#	CHEMICAL	EPA ANALYSIS USED	REQUIRED QUANTIFICATION LEVEL(µg/L)	REPORTING RESULTS (µg/L) Grab	REPORTING RESULTS (µg/L) Composite	REQUIRED SAMPLE TYPE
83-32-9	Acenaphthene	625	10	<5	<5	G or C
120-12-7	Anthracene	625	10	<5	<5	G or C
92-87-5	Benzidine	625*		<5	<5	G or C
56-55-3	Benzo (a) anthracene	625	10	<5	<5	G or C
205-99-2	Benzo (b) fluoranthene	625	10	<5	<5	G or C
207-08-9	Benzo (k) fluoranthene	625	10	<5	<5	G or C
50-32-8	Benzo (a) pyrene	625	10	<5	<5	G or C
111-44-4	Bis 2-Chloroethyl Ether	625*		<5	<5	G or C
108-60-1	Bis 2-Chloroisopropyl Ether	625*		<5	<5	G or C
85-68-7	Butyl benzyl phthalate	625	10	<5	<5	G or C
91-58-7	2-Chloronaphthalene	625*		<5	<5	G or C
218-01-9	Chrysene	625	10	<5	<5	G or C
53-70-3	Dibenz(a,h)anthracene	625	20	<5	<5	G or C
84-74-2	Dibutyl phthalate (synonym = Di-n-Butyl	625	10	<5	<5	G or C
95-50-1	1,2-Dichlorobenzene	624	10	<5		G or C
541-73-1	1,3-Dichlorobenzene	624	10	<5		G or C
106-46-7	1,4-Dichlorobenzene	624	10	<5		G or C
91-94-1	3,3-Dichlorobenzidine	625*		<5	<5	G or C
84-66-2	Diethyl phthalate	625	10	<5	<5	G or C
117-81-7	Bis-2-ethylhexyl phthalate	625	10	<5	7	G or C
131-11-3	Dimethyl phthalate	625*		<5	<5	G or C
121-14-2	2,4-Dinitrotoluene	625	10	<5	<5	G or C
122-66-7	1,2-Diphenylhydrazine	625*		<5	<5	G or C
206-44-0	Fluoranthene	625	10	<5	<5	G or C
86-73-7	Fluorene	625	10	<5	<5	G or C
118-74-1	Hexachlorobenzene	625*		<5	<5	G or C
87-68-3	Hexachlorobutadiene	625*		<5	<5	G or C
77-47-4	Hexachlorocyclopentadiene	625*		<5	<5	G or C
67-72-1	Hexachloroethane	625*		<5	<5	G or C
193-39-5	Indeno(1,2,3-cd)pyrene	625	20	<5	<5	G or C
78-59-1	Isophorone	625	10	<5	<5	G or C
98-95-3	Nitrobenzene	625	10	<5	<5	G or C
62-75-9	N-Nitrosodimethylamine	625*		<5	<5	G or C
621-64-7	N-Nitrosodi-n-propylamine	625*		<5	<5	G or C
86-30-6	N-Nitrosodiphenylamine	625*		<5	<5	G or C
129-00-0	Pyrene	625	10	<5	<5	G or C
120-82-1	1,2,4-Trichlorobenzene	625	10	<5	<5	G or C

VOLATILES

CASRN#	CHEMICAL	EPA ANALYSIS USED	REQUIRED QUANTIFICATION LEVEL (µg/L)	REPORTING RESULTS (µg/L) Grab	REPORTING RESULTS (µg/L) Composite	REQUIRED SAMPLE TYPE
107-02-8	Acrolein	624*		<50		G
107-13-1	Acrylonitrile	625*		<50		G
71-43-2	Benzene	624	10	<5		G
75-25-2	Bromoform	624	10	<5		G
56-23-5	Carbon Tetrachloride	624	10	<5		G
108-90-7	Chlorobenzene (synonym =	624	50	<5		G
124-48-1	Chlorodibromomethane	624	10	<5		G
67-66-3	Chloroform	624	10	9		G
75-09-2	Dichloromethane (synonym = methylene	624	20	<5		G
75-27-4	Dichlorobromomethane	624	10	<5		G
107-06-2	1,2-Dichloroethane	624	10	<5		G
75-35-4	1,1-Dichloroethylene	624	10	<5		G
156-60-5	1,2-trans-dichloroethylene	624*		<5		G
78-87-5	1,2-Dichloropropane	624*		<5		G
542-75-6	1,3-Dichloropropene	624*		<5		G
100-41-4	Ethylbenzene	624	10	<5		G
74-83-9	Methyl Bromide	624*		<10		G
79-34-5	1,1,2,2-Tetrachloroethane	624*		<5		G
127-18-4	Tetrachloroethylene	624	10	<5		G
10-88-3	Toluene	624	10	<5		G
79-00-5	1,1,2-Trichloroethane	624*		<5		G
79-01-6	Trichloroethylene	624	10	<5		G
75-01-4	Vinyl Chloride	624	10	<10		G

RADIONUCLIDES

CASRN#	CHEMICAL	EPA ANALYSIS USED	REQUIRED QUANTIFICATION LEVEL	REPORTING RESULTS (pCi/L) Grab	REPORTING RESULTS (pCi/L) Composite	REQUIRED SAMPLE TYPE
	Strontium 90 (pCi/L)	905*			1.8	G or C
	Tritium (pCi/L)	906*			<139	G or C
	Uranium (pCi/L)		NOT REQUIRED			G or C
	Radium 226 (pCi/L)	903.1			0.3	G or C
	Radium 228 (pCi/L)	Ra-05			<0.9	G or C
	Combined Ra226 & Ra228	900*			<0.9	G or C
	Beta Particle & Photon Activity (mrem/yr)	900*			33.3 pCi/L ***	G or C
	Gross Alpha Particle Activity (pCi/L)	900*			<12.8 ***	G or C

ACID EXTRACTABLES

CASRN#	CHEMICAL	EPA ANALYSIS USED	REQUIRED QUANTIFICATION LEVEL(µg/L)	REPORTING RESULTS (µg/L) Grab	REPORTING RESULTS (µg/L) Composite	REQUIRED SAMPLE TYPE
95-57-8	2-Chlorophenol	625	10	<5		G or C
120-83-2	2,4 Dichlorophenol	625	10	<5	<5	G or C
105-67-9	2,4 Dimethylphenol	625	10	<5	<5	G or C
51-28-5	2,4-Dinitrophenol	625*		<20	<20	G or C
534-52-1	2-Methyl-4,6-Dinitrophenol	625*		<5	<5	G or C
25154-52-3	Nonylphenol		NOT REQUIRED			G or C
87-86-5	Pentachlorophenol	625	50	<10	<10	G or C
108-95-2	Phenol	625	10	<5	<5	G or C
88-06-2	2,4,6-Trichlorophenol	625	10	<5	<5	G or C

MISCELLANEOUS

CASRN#	CHEMICAL	EPA ANALYSIS USED	REQUIRED QUANTIFICATION LEVEL(mg/L)	REPORTING RESULTS (mg/L) Grab	REPORTING RESULTS (mg/L) Composite	REQUIRED SAMPLE TYPE
776-41-7	Ammonia as NH3-N	350.1	0.2		0.13	C
16887-00-6	Chlorides	4500Cl-C*			254	C
7782-50-5	Chlorine, Total Residual	4500Cl-G*	0.1	0.13		G
57-12-5	Cyanide, Free	335.4*	0.01	<0.005		G
94-75-7	2,4 Dichlorophenoxy acetic (synonym = 2,4-D)		NOT REQUIRED			G
1746-01-6	Dioxin (2,3,7,8-tetrachlorodibenzo-p-dioxin)	1613	0.00000001		Not Detected	G
N/A	*E. coli* / *Enterococcus* (N/CML)	9221F*		<2 MPN		G
N/A	Foaming Agents (as MBAS)	5540C*		0.06		G
6/4/7783	Hydrogen Sulfide	4500S2-H*		<0.06		G
14797-55-8	Nitrate as N (mg/L)	353.2*			3.75	C
N/A	Sulfate (mg/L)	SM15/426C*			2150	C
N/A	Total Dissolved Solids (mg/L)	2540C*			2800	C
60-10-5	Tributyltin (7)	NBSR 85-3295		<0.04 µg/L		G or C
93-72-1	2-(2,4,5-Trichlorophenoxy) propionic acid (synonym =		NOT REQUIRED			G
	Hardness (mg/L as $CaCO_3$)		NOT REQUIRED			G or C

* An asterick beside the listed test method means that the test method was left to the discretion of the permittee. The method number listed in this chart is the method used by the lab. Otherwise, all test methods used by the permittee's laboratory were checked against the required test method and are in compliance.

** Note: Composites were tested using EPA Method 625.

*** Note from Florida Radiochemistry Services, Inc.: "Sample 0709161-01 had an elevated detection limit and/or counting error due to a low volume of sample used. The sample had high TDS (Total Dissolved Solids). The high TDS interferes with the sample counting efficiency. This is caused by the solids absorbing the sample activity (Sample self-absorption). The sample counting efficiency is decreased because of this. Therefore, the counting time was increased (the sample was counted overnight or as long as possible) to help reduce the detection limit and counting error."

General Note: The permittee's laboratory reported multiple test results for a single parameter in a number of instances due to the utilization of several test methods capable of detecting the same parameters. For the purposes of this evaluation, only those results of which the required test method was used, or, if the test method was left to the discretion of the permittee, the test method which resulted in the lowest calculated QL, were considered by DEQ to be viable data points.

Parameters That Were Reported Greater than Laboratory Quantification Level for Outfall 001

Chemical	LAB ANALYSIS	Lab QL	REPORTING RESULTS Grab	REPORTING RESULTS Composite	UNITS
pH (field)	4500H B	N/A	7.5		SU
Temperature (field)	2550B	N/A	46		°C
Sulfite	HACH8071	2	10		mg/L
Phenols	420.4	0.02	0.04		mg/L
Fecal Coliform	9221E	2/100	4		MPN
Conductivity	2510B	2	586		umhos/c
BOD	5210B	2		3	mg/L
TSS	2540D	1		2	mg/L
TKN	351.2	0.5		1.67	mg/L
Nitrate/Nitrite	353.2	0.05		3.78	mg/L
COD	8000	10		46	mg/L
Ammonia	4500NH3D	0.1		0.13	mg/L
Phosphorus	365.1	0.1		0.59	mg/L
Nitrate	353.2	0.05		3.75	mg/L
Organic Nitrogen	351.2/4500NH	0.5		1.54	mg/L
TOC	5310B	0.5		18	mg/L
Color (pcu)	2120B	5		15	pcu
Fluoride	4500FC	0.1		1.02	mg/L
Nitrite	4500NO2B	0.005		0.022	mg/L
Total Aluminum	200.7	0.05		0.129	mg/L
Total Barium	200.7	0.005		0.218	mg/L
Total Iron	200.7	0.01		0.175	mg/L
Total Boron	200.7	0.005		0.325	mg/L
Total Magnesium	200.7	0.025		38	mg/L
Total Molybdenum	200.7	0.005		0.022	mg/L
Total Manganese	200.7	0.005		0.067	mg/L
Total Cadmium	200.7	0.0005		0.0057	mg/L
Total Chromium	200.7	0.001		0.014	mg/L
Total Copper	200.7	0.005		0.019	mg/L
Total Nickel	200.7	0.005		0.016	mg/L
Total Thallium	200.7	0.005		0.006	mg/L
Total Zinc	200.7	0.005		0.066	mg/L
Titanium	SM3113B	0.004		0.005	mg/L

Attachment F:

Limitation Evaluations / Nutrient Evaluation

MSTRANTI DATA SOURCE REPORT
Outfall 001 – Hopewell Cogeneration (VA0079502)

Stream Information	
Mean Hardness	Hardness data taken from WET lab reports for Honeywell International (VA0005291)
90% Temperature (annual)	Temperature data from Application 2C for 2008 permit re-issuance of Honeywell International (VA0005291). The average of the two long term average summer temperatures taken from Outfalls 001 & 002.
90% Temperature (wet season)	
90% Maximum pH	pH data from DMR's for Honeywell International (VA0005291)
10% Maximum pH	
Tier Designation	BPJ – See Item 14 of this fact sheet
Stream Flows	
All Data	See Item 13 of this fact sheet for ambient flow determination.
Mixing Information	
All Data	MIX.exe
Effluent Information	
Mean Hardness	Hardness data taken from WET lab reports 2004-2008
90% Temperature (annual)	Data from DMR's 2004-2008
90% Maximum pH	
10% Maximum pH	
Discharge Flow	

Mixing Zone Predictions for Hopewell Cogen (VA0079502)-Outfall 001 (2010 Permit Re-issuance)

Effluent Flow = 1.45 MGD
Stream 7Q10 = 61.82 MGD
Stream 30Q10 = 61.82 MGD
Stream 1Q10 = 61.82 MGD
Stream slope = 0.167 ft/ft
Stream width = 30 ft
Bottom scale = 3
Channel scale = 1

Mixing Zone Predictions @ 7Q10

Depth = .7427 ft
Length = 1066.23 ft
Velocity = 4.3958 ft/sec
Residence Time = .0028 days

Recommendation:

A complete mix assumption is appropriate for this situation and the entire 7Q10 may be used.

Mixing Zone Predictions @ 30Q10

Depth = .7427 ft
Length = 1066.23 ft
Velocity = 4.3958 ft/sec
Residence Time = .0028 days

Recommendation:

A complete mix assumption is appropriate for this situation and the entire 30Q10 may be used.

Mixing Zone Predictions @ 1Q10

Depth = .7427 ft
Length = 1066.23 ft
Velocity = 4.3958 ft/sec
Residence Time = .0674 hours

Recommendation:

A complete mix assumption is appropriate for this situation and the entire 1Q10 may be used.

Virginia DEQ Mixing Zone Analysis Version 2.1

FRESHWATER
WATER QUALITY CRITERIA / WASTELOAD ALLOCATION ANALYSIS

Facility Name: Hopewell Cogeneration (001) Permit No.: VA0079502

Receiving Stream: Gravelly Run Version: OWP Guidance Memo 00-2011 (8/24/00)

Stream Information		
Mean Hardness (as CaCO3) =	60.1	mg/L
90% Temperature (Annual) =	39.6	deg C
90% Temperature (Wet season) =	39.6	deg C
90% Maximum pH =	8.5	SU
10% Maximum pH =	7.5	SU
Tier Designation (1 or 2) =	1	
Public Water Supply (PWS) Y/N? =	n	
Trout Present Y/N? =	n	
Early Life Stages Present Y/N? =	y	

Stream Flows		
1Q10 (Annual) =	61.82	MGD
7Q10 (Annual) =	61.82	MGD
30Q10 (Annual) =	61.82	MGD
1Q10 (Wet season) =	61.82	MGD
30Q10 (Wet season)	61.82	MGD
30Q5 =	61.82	MGD
Harmonic Mean =	61.82	MGD

Mixing Information		
Annual - 1Q10 Mix =	100	%
- 7Q10 Mix =	100	%
- 30Q10 Mix =	100	%
Wet Season - 1Q10 Mix =	100	%
- 30Q10 Mix =	100	%

Effluent Information		
Mean Hardness (as CaCO3) =	55	mg/L
90% Temp (Annual) =	55.88	deg C
90% Temp (Wet season) =	55.88	deg C
90% Maximum pH =	8.4	SU
10% Maximum pH =	7.1	SU
Discharge Flow =	1.45	MGD

Parameter	Background	Water Quality Criteria				Wasteload Allocations				Antidegradation Baseline				Antidegradation Allocations				**Most Limiting Allocations**				Lowest LTA
(ug/l unless noted)	Conc.	Acute	Chronic	HH (PWS)	HH	Acute	Chronic	HH (PWS)	HH	Acute	Chronic	HH (PWS)	HH	Acute	Chronic	HH (PWS)	HH	**Acute**	**Chronic**	**HH (PWS)**	**HH**	
Acenapthene	0	--	--	na	9.9E+02	--	--	na	4.3E+04	--	--	--	--	--	--	--	--	**--**	**--**	**na**	**4.3E+04**	--
Acrolein	0	--	--	na	9.3E+00	--	--	na	4.1E+02	--	--	--	--	--	--	--	--	**--**	**--**	**na**	**4.1E+02**	--
Acrylonitrile[C]	0	--	--	na	2.5E+00	--	--	na	1.1E+02	--	--	--	--	--	--	--	--	**--**	**--**	**na**	**1.1E+02**	--
Aldrin [C]	0	3.0E+00	--	na	5.0E-04	1.3E+02	--	na	2.2E-02	--	--	--	--	--	--	--	--	**1.3E+02**	**--**	**na**	**2.2E-02**	5.38E+01
Ammonia-N (mg/l) (Yearly)	0	3.22E+00	2.12E-01	na	--	1.40E+02	9.25E+00	na	--	--	--	--	--	--	--	--	--	**1.40E+02**	**9.25E+00**	**na**	**--**	5.56E+00
Ammonia-N (mg/l) (High Flow)	0	3.22E+00	2.12E-01	na	--	1.4E+02	9.2E+00	na	--	--	--	--	--	--	--	--	--	**1.4E+02**	**9.2E+00**	**na**	**--**	5.56E+00
Anthracene	0	--	--	na	4.0E+04	--	--	na	1.7E+06	--	--	--	--	--	--	--	--	**--**	**--**	**na**	**1.7E+06**	--
Antimony	0	--	--	na	6.4E+02	--	--	na	2.8E+04	--	--	--	--	--	--	--	--	**--**	**--**	**na**	**2.8E+04**	--
Arsenic	0	3.4E+02	1.5E+02	na	--	1.5E+04	6.5E+03	na	--	--	--	--	--	--	--	--	--	**1.5E+04**	**6.5E+03**	**na**	**--**	3.93E+03
Barium	0	--	--	na	--	--	--	na	--	--	--	--	--	--	--	--	--	**--**	**--**	**na**	**--**	--
Benzene [C]	0	--	--	na	5.1E+02	--	--	na	2.2E+04	--	--	--	--	--	--	--	--	**--**	**--**	**na**	**2.2E+04**	--
Benzidine[C]	0	--	--	na	2.0E-03	--	--	na	8.7E-02	--	--	--	--	--	--	--	--	**--**	**--**	**na**	**8.7E-02**	--
Benzo (a) anthracene [C]	0	--	--	na	1.8E-01	--	--	na	7.9E+00	--	--	--	--	--	--	--	--	**--**	**--**	**na**	**7.9E+00**	--
Benzo (b) fluoranthene [C]	0	--	--	na	1.8E-01	--	--	na	7.9E+00	--	--	--	--	--	--	--	--	**--**	**--**	**na**	**7.9E+00**	--
Benzo (k) fluoranthene [C]	0	--	--	na	1.8E-01	--	--	na	7.9E+00	--	--	--	--	--	--	--	--	**--**	**--**	**na**	**7.9E+00**	--
Benzo (a) pyrene [C]	0	--	--	na	1.8E-01	--	--	na	7.9E+00	--	--	--	--	--	--	--	--	**--**	**--**	**na**	**7.9E+00**	--
Bis2-Chloroethyl Ether[C]	0	--	--	na	5.3E+00	--	--	na	2.3E+02	--	--	--	--	--	--	--	--	**--**	**--**	**na**	**2.3E+02**	--
Bis2-Chloroisopropyl Ether	0	--	--	na	6.5E+04	--	--	na	2.8E+06	--	--	--	--	--	--	--	--	**--**	**--**	**na**	**2.8E+06**	--
Bis 2-Ethylhexyl Phthalate[C]	0	--	--	na	2.2E+01	--	--	na	9.6E+02	--	--	--	--	--	--	--	--	**--**	**--**	**na**	**9.6E+02**	--
Bromoform [C]	0	--	--	na	1.4E+03	--	--	na	6.1E+04	--	--	--	--	--	--	--	--	**--**	**--**	**na**	**6.1E+04**	--
Butylbenzylphthalate	0	--	--	na	1.9E+03	--	--	na	8.3E+04	--	--	--	--	--	--	--	--	**--**	**--**	**na**	**8.3E+04**	--
Cadmium	0	2.2E+00	7.6E-01	na	--	9.6E+01	3.3E+01	na	--	--	--	--	--	--	--	--	--	**9.6E+01**	**3.3E+01**	**na**	**--**	1.99E+01
Carbon Tetrachloride [C]	0	--	--	na	1.6E+01	--	--	na	7.0E+02	--	--	--	--	--	--	--	--	**--**	**--**	**na**	**7.0E+02**	--
Chlordane [C]	0	2.4E+00	4.3E-03	na	8.1E-03	1.0E+02	1.9E-01	na	3.5E-01	--	--	--	--	--	--	--	--	**1.0E+02**	**1.9E-01**	**na**	**3.5E-01**	1.13E-01
Chloride	0	8.6E+05	2.3E+05	na	--	3.8E+07	1.0E+07	na	--	--	--	--	--	--	--	--	--	**3.8E+07**	**1.0E+07**	**na**	**--**	6.03E+06
TRC	0	1.9E+01	1.1E+01	na	--	8.3E+02	4.8E+02	na	--	--	--	--	--	--	--	--	--	**8.3E+02**	**4.8E+02**	**na**	**--**	2.89E+02
Chlorobenzene	0	--	--	na	1.6E+03	--	--	na	7.0E+04	--	--	--	--	--	--	--	--	**--**	**--**	**na**	**7.0E+04**	--
Chlorodibromomethane[C]	0	--	--	na	1.3E+02	--	--	na	5.7E+03	--	--	--	--	--	--	--	--	**--**	**--**	**na**	**5.7E+03**	--

Parameter	Background	Water Quality Criteria				Wasteload Allocations				Antidegradation Baseline				Antidegradation Allocations				**Most Limiting Allocations**				Lowest LTA
(ug/l unless noted)	Conc.	Acute	Chronic	HH (PWS)	HH	Acute	Chronic	HH (PWS)	HH	Acute	Chronic	HH (PWS)	HH	Acute	Chronic	HH (PWS)	HH	**Acute**	**Chronic**	**HH (PWS)**	**HH**	
Chloroform	0	--	--	na	1.1E+04	--	--	na	4.8E+05	--	--	--	--	--	--	--	--	**--**	**--**	**na**	**4.8E+05**	--
2-Chloronaphthalene	0	--	--	na	1.6E+03	--	--	na	7.0E+04	--	--	--	--	--	--	--	--	**--**	**--**	**na**	**7.0E+04**	--
2-Chlorophenol	0	--	--	na	1.5E+02	--	--	na	6.5E+03	--	--	--	--	--	--	--	--	**--**	**--**	**na**	**6.5E+03**	--
Chlorpyrifos	0	8.3E-02	4.1E-02	na	--	3.6E+00	1.8E+00	na	--	--	--	--	--	--	--	--	--	**3.6E+00**	**1.8E+00**	**na**	**--**	1.08E+00
Chromium III	0	3.7E+02	4.9E+01	na	--	1.6E+04	2.1E+03	na	--	--	--	--	--	--	--	--	--	**1.6E+04**	**2.1E+03**	**na**	**--**	1.28E+03
Chromium VI	0	1.6E+01	1.1E+01	na	--	7.0E+02	4.8E+02	na	--	--	--	--	--	--	--	--	--	**7.0E+02**	**4.8E+02**	**na**	**--**	2.87E+02
Chromium, Total	0	--	--	1.0E+02	--	--	--	na	--	--	--	--	--	--	--	--	--	**--**	**--**	**na**	**--**	--
Chrysene [C]	0	--	--	na	1.8E-02	--	--	na	7.9E-01	--	--	--	--	--	--	--	--	**--**	**--**	**na**	**7.9E-01**	--
Copper	0	8.3E+00	5.8E+00	na	--	3.6E+02	2.5E+02	na	--	--	--	--	--	--	--	--	--	**3.6E+02**	**2.5E+02**	**na**	**--**	1.49E+02
Cyanide, Free	0	2.2E+01	5.2E+00	na	1.6E+04	9.6E+02	2.3E+02	na	7.0E+05	--	--	--	--	--	--	--	--	**9.6E+02**	**2.3E+02**	**na**	**7.0E+05**	1.36E+02
DDD [C]	0	--	--	na	3.1E-03	--	--	na	1.4E-01	--	--	--	--	--	--	--	--	**--**	**--**	**na**	**1.4E-01**	--
DDE [C]	0	--	--	na	2.2E-03	--	--	na	9.6E-02	--	--	--	--	--	--	--	--	**--**	**--**	**na**	**9.6E-02**	--
DDT [C]	0	1.1E+00	1.0E-03	na	2.2E-03	4.8E+01	4.4E-02	na	9.6E-02	--	--	--	--	--	--	--	--	**4.8E+01**	**4.4E-02**	**na**	**9.6E-02**	2.62E-02
Demeton	0	--	1.0E-01	na	--	--	4.4E+00	na	--	--	--	--	--	--	--	--	--	**--**	**4.4E+00**	**na**	**--**	2.62E+00
Diazinon	0	1.7E-01	1.7E-01	na	--	7.4E+00	7.4E+00	na	--	--	--	--	--	--	--	--	--	**7.4E+00**	**7.4E+00**	**na**	**--**	3.05E+00
Dibenz(a,h)anthracene [C]	0	--	--	na	1.8E-01	--	--	na	7.9E+00	--	--	--	--	--	--	--	--	**--**	**--**	**na**	**7.9E+00**	--
1,2-Dichlorobenzene	0	--	--	na	1.3E+03	--	--	na	5.7E+04	--	--	--	--	--	--	--	--	**--**	**--**	**na**	**5.7E+04**	--
1,3-Dichlorobenzene	0	--	--	na	9.6E+02	--	--	na	4.2E+04	--	--	--	--	--	--	--	--	**--**	**--**	**na**	**4.2E+04**	--
1,4-Dichlorobenzene	0	--	--	na	1.9E+02	--	--	na	8.3E+03	--	--	--	--	--	--	--	--	**--**	**--**	**na**	**8.3E+03**	--
3,3-Dichlorobenzidine[C]	0	--	--	na	2.8E-01	--	--	na	1.2E+01	--	--	--	--	--	--	--	--	**--**	**--**	**na**	**1.2E+01**	--
Dichlorobromomethane [C]	0	--	--	na	1.7E+02	--	--	na	7.4E+03	--	--	--	--	--	--	--	--	**--**	**--**	**na**	**7.4E+03**	--
1,2-Dichloroethane [C]	0	--	--	na	3.7E+02	--	--	na	1.6E+04	--	--	--	--	--	--	--	--	**--**	**--**	**na**	**1.6E+04**	--
1,1-Dichloroethylene	0	--	--	na	7.1E+03	--	--	na	3.1E+05	--	--	--	--	--	--	--	--	**--**	**--**	**na**	**3.1E+05**	--
1,2-trans-dichloroethylene	0	--	--	na	1.0E+04	--	--	na	4.4E+05	--	--	--	--	--	--	--	--	**--**	**--**	**na**	**4.4E+05**	--
2,4-Dichlorophenol	0	--	--	na	2.9E+02	--	--	na	1.3E+04	--	--	--	--	--	--	--	--	**--**	**--**	**na**	**1.3E+04**	--
2,4-Dichlorophenoxy acetic acid (2,4-D)	0	--	--	na	--	--	--	na	--	--	--	--	--	--	--	--	--	**--**	**--**	**na**	**--**	--
1,2-Dichloropropane[C]	0	--	--	na	1.5E+02	--	--	na	6.5E+03	--	--	--	--	--	--	--	--	**--**	**--**	**na**	**6.5E+03**	--
1,3-Dichloropropene [C]	0	--	--	na	2.1E+02	--	--	na	9.2E+03	--	--	--	--	--	--	--	--	**--**	**--**	**na**	**9.2E+03**	--
Dieldrin [C]	0	2.4E-01	5.6E-02	na	5.4E-04	1.0E+01	2.4E+00	na	2.4E-02	--	--	--	--	--	--	--	--	**1.0E+01**	**2.4E+00**	**na**	**2.4E-02**	1.47E+00
Diethyl Phthalate	0	--	--	na	4.4E+04	--	--	na	1.9E+06	--	--	--	--	--	--	--	--	**--**	**--**	**na**	**1.9E+06**	--
2,4-Dimethylphenol	0	--	--	na	8.5E+02	--	--	na	3.7E+04	--	--	--	--	--	--	--	--	**--**	**--**	**na**	**3.7E+04**	--
Dimethyl Phthalate	0	--	--	na	1.1E+06	--	--	na	4.8E+07	--	--	--	--	--	--	--	--	**--**	**--**	**na**	**4.8E+07**	--
Di-n-Butyl Phthalate	0	--	--	na	4.5E+03	--	--	na	2.0E+05	--	--	--	--	--	--	--	--	**--**	**--**	**na**	**2.0E+05**	--
2,4 Dinitrophenol	0	--	--	na	5.3E+03	--	--	na	2.3E+05	--	--	--	--	--	--	--	--	**--**	**--**	**na**	**2.3E+05**	--
2-Methyl-4,6-Dinitrophenol	0	--	--	na	2.8E+02	--	--	na	1.2E+04	--	--	--	--	--	--	--	--	**--**	**--**	**na**	**1.2E+04**	--
2,4-Dinitrotoluene [C]	0	--	--	na	3.4E+01	--	--	na	1.5E+03	--	--	--	--	--	--	--	--	**--**	**--**	**na**	**1.5E+03**	--
Dioxin 2,3,7,8-tetrachlorodibenzo-p-dioxin	0	--	--	na	5.1E-08	--	--	na	2.2E-06	--	--	--	--	--	--	--	--	**--**	**--**	**na**	**2.2E-06**	--
1,2-Diphenylhydrazine[C]	0	--	--	na	2.0E+00	--	--	na	8.7E+01	--	--	--	--	--	--	--	--	**--**	**--**	**na**	**8.7E+01**	--
Alpha-Endosulfan	0	2.2E-01	5.6E-02	na	8.9E+01	9.6E+00	2.4E+00	na	3.9E+03	--	--	--	--	--	--	--	--	**9.6E+00**	**2.4E+00**	**na**	**3.9E+03**	1.47E+00
Beta-Endosulfan	0	2.2E-01	5.6E-02	na	8.9E+01	9.6E+00	2.4E+00	na	3.9E+03	--	--	--	--	--	--	--	--	**9.6E+00**	**2.4E+00**	**na**	**3.9E+03**	1.47E+00
Alpha + Beta Endosulfan	0	2.2E-01	5.6E-02	--	--	9.6E+00	2.4E+00	--	--	--	--	--	--	--	--	--	--	**9.6E+00**	**2.4E+00**	**--**	**--**	1.47E+00
Endosulfan Sulfate	0	--	--	na	8.9E+01	--	--	na	3.9E+03	--	--	--	--	--	--	--	--	**--**	**--**	**na**	**3.9E+03**	--
Endrin	0	8.6E-02	3.6E-02	na	6.0E-02	3.8E+00	1.6E+00	na	2.6E+00	--	--	--	--	--	--	--	--	**3.8E+00**	**1.6E+00**	**na**	**2.6E+00**	9.44E-01
Endrin Aldehyde	0	--	--	na	3.0E-01	--	--	na	1.3E+01	--	--	--	--	--	--	--	--	**--**	**--**	**na**	**1.3E+01**	--
Ethylbenzene	0	--	--	na	2.1E+03	--	--	na	9.2E+04	--	--	--	--	--	--	--	--	**--**	**--**	**na**	**9.2E+04**	--
Fluoranthene	0	--	--	na	1.4E+02	--	--	na	6.1E+03	--	--	--	--	--	--	--	--	**--**	**--**	**na**	**6.1E+03**	--
Fluorene	0	--	--	na	5.3E+03	--	--	na	2.3E+05	--	--	--	--	--	--	--	--	**--**	**--**	**na**	**2.3E+05**	--

Parameter	Background	Water Quality Criteria				Wasteload Allocations				Antidegradation Baseline				Antidegradation Allocations				**Most Limiting Allocations**				Lowest LTA
(ug/l unless noted)	Conc.	Acute	Chronic	HH (PWS)	HH	Acute	Chronic	HH (PWS)	HH	Acute	Chronic	HH (PWS)	HH	Acute	Chronic	HH (PWS)	HH	**Acute**	**Chronic**	**HH (PWS)**	**HH**	
Foaming Agents	0	--	--	na	--	--	--	na	--	--	--	--	--	--	--	--	--	**--**	**--**	**na**	**--**	--
Guthion	0	--	1.0E-02	na	--	--	4.4E-01	na	--	--	--	--	--	--	--	--	--	**--**	**4.4E-01**	**na**	**--**	2.62E-01
Heptachlor [C]	0	5.2E-01	3.8E-03	na	7.9E-04	2.3E+01	1.7E-01	na	3.4E-02	--	--	--	--	--	--	--	--	**2.3E+01**	**1.7E-01**	**na**	**3.4E-02**	9.97E-02
Heptachlor Epoxide[C]	0	5.2E-01	3.8E-03	na	3.9E-04	2.3E+01	1.7E-01	na	1.7E-02	--	--	--	--	--	--	--	--	**2.3E+01**	**1.7E-01**	**na**	**1.7E-02**	9.97E-02
Hexachlorobenzene[C]	0	--	--	na	2.9E-03	--	--	na	1.3E-01	--	--	--	--	--	--	--	--	**--**	**--**	**na**	**1.3E-01**	--
Hexachlorobutadiene[C]	0	--	--	na	1.8E+02	--	--	na	7.9E+03	--	--	--	--	--	--	--	--	**--**	**--**	**na**	**7.9E+03**	--
Hexachlorocyclohexane Alpha-BHC[C]	0	--	--	na	4.9E-02	--	--	na	2.1E+00	--	--	--	--	--	--	--	--	**--**	**--**	**na**	**2.1E+00**	--
Hexachlorocyclohexane Beta-BHC[C]	0	--	--	na	1.7E-01	--	--	na	7.4E+00	--	--	--	--	--	--	--	--	**--**	**--**	**na**	**7.4E+00**	--
Hexachlorocyclohexane Gamma-BHC[C] (Lindane)	0	9.5E-01	na	na	1.8E+00	4.1E+01	--	na	7.9E+01	--	--	--	--	--	--	--	--	**4.1E+01**	**--**	**na**	**7.9E+01**	1.70E+01
Hexachlorocyclopentadiene	0	--	--	na	1.1E+03	--	--	na	4.8E+04	--	--	--	--	--	--	--	--	**--**	**--**	**na**	**4.8E+04**	--
Hexachloroethane[C]	0	--	--	na	3.3E+01	--	--	na	1.4E+03	--	--	--	--	--	--	--	--	**--**	**--**	**na**	**1.4E+03**	--
Hydrogen Sulfide	0	--	2.0E+00	na	--	--	8.7E+01	na	--	--	--	--	--	--	--	--	--	**--**	**8.7E+01**	**na**	**--**	5.25E+01
Indeno (1,2,3-cd) pyrene [C]	0	--	--	na	1.8E-01	--	--	na	7.9E+00	--	--	--	--	--	--	--	--	**--**	**--**	**na**	**7.9E+00**	--
Iron	0	--	--	na	--	--	--	na	--	--	--	--	--	--	--	--	--	**--**	**--**	**na**	**--**	--
Isophorone[C]	0	--	--	na	9.6E+03	--	--	na	4.2E+05	--	--	--	--	--	--	--	--	**--**	**--**	**na**	**4.2E+05**	--
Kepone	0	--	0.0E+00	na	--	--	0.0E+00	na	--	--	--	--	--	--	--	--	--	**--**	**0.0E+00**	**na**	**--**	0.00E+00
Lead	0	6.2E+01	7.0E+00	na	--	2.7E+03	3.1E+02	na	--	--	--	--	--	--	--	--	--	**2.7E+03**	**3.1E+02**	**na**	**--**	1.85E+02
Malathion	0	--	1.0E-01	na	--	--	4.4E+00	na	--	--	--	--	--	--	--	--	--	**--**	**4.4E+00**	**na**	**--**	2.62E+00
Manganese	0	--	--	na	--	--	--	na	--	--	--	--	--	--	--	--	--	**--**	**--**	**na**	**--**	--
Mercury	0	1.4E+00	7.7E-01	- -	- -	6.1E+01	3.4E+01	- -	- -	--	--	--	--	--	--	--	--	**6.1E+01**	**3.4E+01**	**- -**	**- -**	2.02E+01
Methyl Bromide	0	--	--	na	1.5E+03	--	--	na	6.5E+04	--	--	--	--	--	--	--	--	**--**	**--**	**na**	**6.5E+04**	--
Methylene Chloride [C]	0	--	--	na	5.9E+03	--	--	na	2.6E+05	--	--	--	--	--	--	--	--	**--**	**--**	**na**	**2.6E+05**	--
Methoxychlor	0	--	3.0E-02	na	--	--	1.3E+00	na	--	--	--	--	--	--	--	--	--	**--**	**1.3E+00**	**na**	**--**	7.87E-01
Mirex	0	--	0.0E+00	na	--	--	0.0E+00	na	--	--	--	--	--	--	--	--	--	**--**	**0.0E+00**	**na**	**--**	0.00E+00
Nickel	0	1.2E+02	1.3E+01	na	4.6E+03	5.2E+03	5.7E+02	na	2.0E+05	--	--	--	--	--	--	--	--	**5.2E+03**	**5.7E+02**	**na**	**2.0E+05**	3.45E+02
Nitrate (as N)	0	--	--	na	--	--	--	na	--	--	--	--	--	--	--	--	--	**--**	**--**	**na**	**--**	--
Nitrobenzene	0	--	--	na	6.9E+02	--	--	na	3.0E+04	--	--	--	--	--	--	--	--	**--**	**--**	**na**	**3.0E+04**	--
N-Nitrosodimethylamine[C]	0	--	--	na	3.0E+01	--	--	na	1.3E+03	--	--	--	--	--	--	--	--	**--**	**--**	**na**	**1.3E+03**	--
N-Nitrosodiphenylamine[C]	0	--	--	na	6.0E+01	--	--	na	2.6E+03	--	--	--	--	--	--	--	--	**--**	**--**	**na**	**2.6E+03**	--
N-Nitrosodi-n-propylamine[C]	0	--	--	na	5.1E+00	--	--	na	2.2E+02	--	--	--	--	--	--	--	--	**--**	**--**	**na**	**2.2E+02**	--
Nonylphenol	0	2.8E+01	6.6E+00	--	--	1.2E+03	2.9E+02	na	--	--	--	--	--	--	--	--	--	**1.2E+03**	**2.9E+02**	**na**	**--**	1.73E+02
Parathion	0	6.5E-02	1.3E-02	na	--	2.8E+00	5.7E-01	na	--	--	--	--	--	--	--	--	--	**2.8E+00**	**5.7E-01**	**na**	**--**	3.41E-01
PCB Total[C]	0	--	1.4E-02	na	6.4E-04	--	6.1E-01	na	2.8E-02	--	--	--	--	--	--	--	--	**--**	**6.1E-01**	**na**	**2.8E-02**	3.67E-01
Pentachlorophenol [C]	0	1.4E+01	1.1E+01	na	3.0E+01	6.2E+02	4.8E+02	na	1.3E+03	--	--	--	--	--	--	--	--	**6.2E+02**	**4.8E+02**	**na**	**1.3E+03**	2.55E+02
Phenol	0	--	--	na	8.6E+05	--	--	na	3.8E+07	--	--	--	--	--	--	--	--	**--**	**--**	**na**	**3.8E+07**	--
Pyrene	0	--	--	na	4.0E+03	--	--	na	1.7E+05	--	--	--	--	--	--	--	--	**--**	**--**	**na**	**1.7E+05**	--
Radionuclides	0	--	--	na	--	--	--	na	--	--	--	--	--	--	--	--	--	**--**	**--**	**na**	**--**	--
Gross Alpha Activity (pCi/L)	0	--	--	na	--	--	--	na	--	--	--	--	--	--	--	--	--	**--**	**--**	**na**	**--**	--
Beta and Photon Activity (mrem/yr)	0	--	--	na	4.0E+00	--	--	na	1.7E+02	--	--	--	--	--	--	--	--	**--**	**--**	**na**	**1.7E+02**	--
Radium 226 + 228 (pCi/L)	0	--	--	na	--	--	--	na	--	--	--	--	--	--	--	--	--	**--**	**--**	**na**	**--**	--
Uranium (ug/l)	0	--	--	na	--	--	--	na	--	--	--	--	--	--	--	--	--	**--**	**--**	**na**	**--**	--
Selenium, Total Recoverable	0	2.0E+01	5.0E+00	na	4.2E+03	8.7E+02	2.2E+02	na	1.8E+05	--	--	--	--	--	--	--	--	**8.7E+02**	**2.2E+02**	**na**	**1.8E+05**	1.31E+02
Silver	0	1.4E+00	--	na	--	6.2E+01	--	na	--	--	--	--	--	--	--	--	--	**6.2E+01**	**--**	**na**	**--**	2.57E+01
Sulfate	0	--	--	na	--	--	--	na	--	--	--	--	--	--	--	--	--	**--**	**--**	**na**	**--**	--
1,1,2,2-Tetrachloroethane[C]	0	--	--	na	4.0E+01	--	--	na	1.7E+03	--	--	--	--	--	--	--	--	**--**	**--**	**na**	**1.7E+03**	--

Parameter	Background	Water Quality Criteria				Wasteload Allocations				Antidegradation Baseline				Antidegradation Allocations				**Most Limiting Allocations**				Lowest LTA
(ug/l unless noted)	Conc.	Acute	Chronic	HH (PWS)	HH	Acute	Chronic	HH (PWS)	HH	Acute	Chronic	HH (PWS)	HH	Acute	Chronic	HH (PWS)	HH	**Acute**	**Chronic**	**HH (PWS)**	**HH**	
Tetrachloroethylene[C]	0	--	--	na	3.3E+01	--	--	na	1.4E+03	--	--	--	--	--	--	--	--	**--**	**--**	**na**	**1.4E+03**	--
Thallium	0	--	--	na	4.7E-01	--	--	na	2.1E+01	--	--	--	--	--	--	--	--	**--**	**--**	**na**	**2.1E+01**	--
Toluene	0	--	--	na	6.0E+03	--	--	na	2.6E+05	--	--	--	--	--	--	--	--	**--**	**--**	**na**	**2.6E+05**	--
Total dissolved solids	0	--	--	na	--	--	--	na	--	--	--	--	--	--	--	--	--	**--**	**--**	**na**	**--**	--
Toxaphene [C]	0	7.3E-01	2.0E-04	na	2.8E-03	3.2E+01	8.7E-03	na	1.2E-01	--	--	--	--	--	--	--	--	**3.2E+01**	**8.7E-03**	**na**	**1.2E-01**	5.25E-03
Tributyltin	0	4.6E-01	7.2E-02	na	--	2.0E+01	3.1E+00	na	--	--	--	--	--	--	--	--	--	**2.0E+01**	**3.1E+00**	**na**	**--**	1.89E+00
1,2,4-Trichlorobenzene	0	--	--	na	7.0E+01	--	--	na	3.1E+03	--	--	--	--	--	--	--	--	**--**	**--**	**na**	**3.1E+03**	--
1,1,2-Trichloroethane[C]	0	--	--	na	1.6E+02	--	--	na	7.0E+03	--	--	--	--	--	--	--	--	**--**	**--**	**na**	**7.0E+03**	--
Trichloroethylene [C]	0	--	--	na	3.0E+02	--	--	na	1.3E+04	--	--	--	--	--	--	--	--	**--**	**--**	**na**	**1.3E+04**	--
2,4,6-Trichlorophenol [C]	0	--	--	na	2.4E+01	--	--	na	1.0E+03	--	--	--	--	--	--	--	--	**--**	**--**	**na**	**1.0E+03**	--
2-(2,4,5-Trichlorophenoxy) propionic acid (Silvex)	0	--	--	na	--	--	--	na	--	--	--	--	--	--	--	--	--	**--**	**--**	**na**	**--**	--
Vinyl Chloride[C]	0	--	--	na	2.4E+01	--	--	na	1.0E+03	--	--	--	--	--	--	--	--	**--**	**--**	**na**	**1.0E+03**	--
Zinc	0	7.6E+01	7.7E+01	na	2.6E+04	3.3E+03	3.3E+03	na	1.1E+06	--	--	--	--	--	--	--	--	**3.3E+03**	**3.3E+03**	**na**	**1.1E+06**	1.36E+03

Notes:

1. All concentrations expressed as micrograms/liter (ug/l), unless noted otherwise
2. Discharge flow is highest monthly average or Form 2C maximum for Industries and design flow for Municipals
3. Metals measured as Dissolved, unless specified otherwise
4. "C" indicates a carcinogenic parameter
5. Regular WLAs are mass balances (minus background concentration) using the % of stream flow entered above under Mixing Information.
   Antidegradation WLAs are based upon a complete mix.
6. Antideg. Baseline = (0.25(WQC - background conc.) + background conc.) for acute and chronic
   = (0.1(WQC - background conc.) + background conc.) for human health
7. WLAs established at the following stream flows: 1Q10 for Acute, 30Q10 for Chronic Ammonia, 7Q10 for Other Chronic, 30Q5 for Non-carcinogens and Harmonic Mean for Carcinogens. To apply mixing ratios from a model set the stream flow equal to (mixing ratio - 1), effluent flow equal to 1 and 100% mix.

Metal	Target Value (SSTV)
Antimony	2.8E+04
Arsenic	3.9E+03
Barium	na
Cadmium	2.0E+01
Chromium III	1.3E+03
Chromium VI	2.8E+02
Copper	1.4E+02
Iron	na
Lead	1.8E+02
Manganese	na
Mercury	2.0E+01
Nickel	3.4E+02
Selenium	1.3E+02
Silver	2.5E+01
Zinc	1.3E+03

Note: do not use QL's lower than the minimum QL's provided in agency guidance

2/17/2010 2:41:56 PM

Facility = Hopewell Cogeneration (VA0079502)
Chemical = Ammonia
Chronic averaging period = 30
WLAa = 140
WLAc = 9.2
Q.L. = 0.1
# samples/mo. = 1
# samples/wk. = 1

Summary of Statistics:

observations = 1
Expected Value = .13
Variance = .006084
C.V. = 0.6
97th percentile daily values = .316344
97th percentile 4 day average = .216292
97th percentile 30 day average= .156786
< Q.L. = 0
Model used = BPJ Assumptions, type 2 data

No Limit is required for this material

The data are:

0.13

2/17/2010 2:45:06 PM

Facility = Hopewell Cogeneration (VA0079502)
Chemical = Chlorides
Chronic averaging period = 4
WLAa = 38000000
WLAc = 1000000
Q.L. = 1
# samples/mo. = 1
# samples/wk. = 1

Summary of Statistics:

observations = 1
Expected Value = 254000
Variance = 2322576
C.V. = 0.6
97th percentile daily values = 618088.
97th percentile 4 day average = 422602.
97th percentile 30 day average= 306337.
< Q.L. = 0
Model used = BPJ Assumptions, type 2 data

No Limit is required for this material

The data are:

254000

9/8/2010 12:55:04 PM

Facility = Hopewell Cogeneration (VA0079502
Chemical = Cadmium
Chronic averaging period = 4
WLAa = 96
WLAc = 33
Q.L. = 0.3
# samples/mo. = 1
# samples/wk. = 1

Summary of Statistics:

observations = 1
Expected Value = .6
Variance = .1296
C.V. = 0.6
97th percentile daily values = 1.46005
97th percentile 4 day average = .998274
97th percentile 30 day average= .723631
< Q.L. = 0
Model used = BPJ Assumptions, type 2 data

No Limit is required for this material

The data are:

0.6

9/8/2010 12:56:52 PM

Facility = Hopewell Cogeneration (VA0079502
Chemical = Copper
Chronic averaging period = 4
WLAa = 360
WLAc = 250
Q.L. = 0.5
# samples/mo. = 1
# samples/wk. = 1

Summary of Statistics:

observations = 1
Expected Value = 8
Variance = 23.04
C.V. = 0.6
97th percentile daily values = 19.4673
97th percentile 4 day average = 13.3103
97th percentile 30 day average= 9.64842
< Q.L. = 0
Model used = BPJ Assumptions, type 2 data

No Limit is required for this material

The data are:

8

2/17/2010 3:39:48 PM

Facility = Hopewell Cogeneration (VA0079502)
Chemical = TRC (actual)
Chronic averaging period = 4
WLAa = 830
WLAc = 480
Q.L. = 100
# samples/mo. = 1
# samples/wk. = 1

Summary of Statistics:

observations = 1
Expected Value = 130
Variance = 6084
C.V. = 0.6
97th percentile daily values = 316.344
97th percentile 4 day average = 216.292
97th percentile 30 day average= 156.786
< Q.L. = 0
Model used = BPJ Assumptions, type 2 data

No Limit is required for this material

The data are:

0.13

9/8/2010 12:58:24 PM

Facility = Hopewell Cogeneration (VA0079502
Chemical = Zinc
Chronic averaging period = 4
WLAa = 3300
WLAc = 3300
Q.L. = 2.0
# samples/mo. = 1
# samples/wk. = 1

Summary of Statistics:

observations = 1
Expected Value = 25
Variance = 225
C.V. = 0.6
97th percentile daily values = 60.8354
97th percentile 4 day average = 41.5947
97th percentile 30 day average= 30.1513
< Q.L. = 0
Model used = BPJ Assumptions, type 2 data

No Limit is required for this material

The data are:

25

2/17/2010 4:27:43 PM

Facility = Hopewell Cogeneration (Outfall 101)
Chemical = Chromium VI
Chronic averaging period = 4
WLAa = 700
WLAc = 480
Q.L. = 0.5
# samples/mo. = 1
# samples/wk. = 1

Summary of Statistics:

observations = 1
Expected Value = 200
Variance = 14400
C.V. = 0.6
97th percentile daily values = 486.683
97th percentile 4 day average = 332.758
97th percentile 30 day average= 241.210
< Q.L. = 0
Model used = BPJ Assumptions, type 2 data

No Limit is required for this material

The data are:

200

9/8/2010 1:13:29 PM

Facility = Hopewell Cogeneration (Outfall 101)
Chemical = Zinc
Chronic averaging period = 4
WLAa = 3300
WLAc = 3300
Q.L. = 2.0
# samples/mo. = 1
# samples/wk. = 1

Summary of Statistics:

observations = 1
Expected Value = 1000
Variance = 360000
C.V. = 0.6
97th percentile daily values = 2433.41
97th percentile 4 day average = 1663.79
97th percentile 30 day average= 1206.05
< Q.L. = 0
Model used = BPJ Assumptions, type 2 data

No Limit is required for this material

The data are:

1000

Total Phosphorus & Total Nitrogen - Hopewell Cogeneration (VA0079502) November 2004 - December 2008

Total Phosporus (TP) Calculations (Outfall 001)

Total Phosphorus (lbs/mo) = Monthly Average flow GPD X 3.785 L/gal X TP Concentration mg/L / 453592.4 mg/lb X days/month

DMR Received	Reported TP - Monthly Average (mg/L)	Reported Flow - Monthly Average (MGD)	Total Phosphorus Monthly Load (lbs)	Total Phosphorus Year Sum (lbs)
3-Nov-04	0.3	0.13	9.76	864
8-Dec-04	0.28	0.12	8.69	
10-Jan-05	0.28	0.13	9.42	
4-Feb-05	0.46	0.64	68.78	
2-Mar-05	0.69	0.18	32.13	
5-Apr-05	0.62	0.26	40.35	
10-May-05	0.46	0.16	19.04	
8-Jun-05	0.57	0.06	8.56	
7-Jul-05	0.42	0.95	103.20	
10-Aug-05	0.57	1.23	181.34	
6-Sep-05	0.62	1.21	187.79	
11-Oct-05	0.67	1.02	176.77	
4-Nov-05	0.39	0.11	10.74	
7-Dec-05	0.35	0.08	7.24	
6-Jan-06	1.25	0.51	164.89	770
9-Feb-06	0.4	0.07	6.54	
7-Mar-06	0.2	0.19	9.83	
5-Apr-06	0.33	0.23	19.00	
3-May-06	0.59	0.2	30.52	
5-Jun-06	1.13	0.15	42.43	
7-Jul-06	0.47	0.89	108.20	
2-Aug-06	0.54	1.21	169.01	
11-Sep-06	0.5	1.34	167.71	
10-Oct-06	0.2	0.04	2.07	
3-Nov-06	0.31	0.47	36.47	
10-Dec-06	0.43	0.12	13.35	
10-Jan-07	0.66	0.06	10.24	912
4-Feb-07	0.51	0.54	64.34	
2-Mar-07	0.67	1.45	251.29	
2-Apr-07	0.6	0.05	7.51	
3-May-07	0.27	0.1	6.98	
2-Jun-07	0.27	0.49	33.12	
2-Jul-07	0.67	0.71	123.04	
3-Aug-07	0.66	0.89	151.94	
4-Sep-07	0.5	1.28	160.20	
2-Oct-07	0.49	0.3	38.02	
2-Nov-07	0.36	0.64	57.67	
6-Dec-07	0.1	0.3	7.76	
3-Jan-08	0.58	0.47	70.51	1105
4-Feb-08	0.7	0.77	125.92	
3-Mar-08	0.35	0.47	42.55	
1-Apr-08	1.09	0.17	46.38	
1-May-08	0.76	0.23	45.21	
2-Jun-08	1.36	0.23	78.30	
2-Jul-08	0.8	0.95	196.58	
4-Aug-08	1.04	0.83	223.27	
2-Sep-08	0.48	0.77	92.52	
8-Oct-08	0.65	0.51	85.75	
7-Nov-08	0.32	0.19	15.22	
8-Dec-08	0.76	0.42	82.56	

Total Nitrogen (TN) Calculations (Outfall 001)

Total Nitrogen = Nitrate/Nitrite + Total Kjeldahl Nitrogen (TKN)

Total Nitrogen = 3.78 mg/L + 1.67 mg/L = 5.45 mg/L TN

Total Nitrogen (lbs/yr) = Max.Monthly Average flow GPD X 3.785 L/gal X TN Concentration mg/L / 453592.4 mg/lb X 365 days months

Total Nitrogen (lbs/yr) = 1450000 GPD X 3.785 L/gal X 5.45 mg/L / 453592.4 mg/lb X 365 days

Total Nitrogen (lbs/yr) =	24069

EQUIVALENT MUNICIPAL NUTRIENT LOADS FOR INDUSTRIAL DISCHARGERS WHICH WARRANT COVERAGE UNDER THE CHESAPEAKE BAY WATERSHED NUTRIENT GENERAL PERMIT

2,300 lbs/year TN	or	300 lbs/year TP	=	STP with a design capacity of 0.04 MGD;
5,700 lbs/year TN	or	760 lbs/year TP	=	STP with a design capacity of 0.1 MGD;
28,500 lbs/year TN	or	3,800 lbs/year TP	=	STP with a design capacity of 0.5 MGD.

Attachment G:

"Hopewell Cogeneration Facility Study of Cooling Tower Blowdown With Respect to 126 Priority Pollutants Chromium and Zinc"

Hopewell Cogeneration Facility
Study of Cooling Tower Blowdown
With Respect to 126 Priority Pollutants
Chromium and Zinc

Index

Purpose 2

Procedures 2

Results. 3

Conclusions and Recommendations 6

Appendix

A. VPDES permit sections
B. Virginia American Water test results
C. Additives' MSDS sheets
D. Cooling System Manual and System Drawings
E. System Materials
   1. Cooling Tower
   2. Cooling Tower Pump house and Pumps
   3. Main Condenser
   4. Closed Cooling Water Heat Exchangers
   5. Steam Turbine Lube oil Cooling System
   6. Gas Turbines lube oil Coolers
   7. GT Generators Cooling System
   8. System Piping
   9. Stainless Steel Data
   10. Corrosion Coupon Data
F. Testing Results (VPDES actual)

Hopewell Cogeneration Facility
Study of Cooling Tower Blowdown
With Respect to 126 Priority Pollutants
Chromium and Zinc

Purpose

In accordance with water permit number VA0079502 for outfall 101, Hopewell Cogeneration Facility is required to test for chromium and zinc monthly and the 126 priority pollutants quarterly. Special Condition E.2. of that permit states that as an alternative to routine monitoring by sampling and analysis for the 126 priority pollutants including chromium and zinc, compliance may be determined by engineering calculations submitted by the permittee. These conditions can be found in Appendix A. It is the purpose of this study to provide information and calculations to satisfy this condition.

Procedures

First, determine what is coming into the cooling tower from the city water lines. Check the Virginia American Water records to see if any of the 126 pollutants are present, and if there are any levels of chromium, zinc or other metals coming into the plant.

Second action is to check all additives going into the cooling tower to see if there is anything that would yield any of the pollutants, chromium, or zinc. This can be done by checking the MSDS sheets for each item that is used for corrosion control, pH balance, and foam control

The last area is to trace the entire cooling loop, noting parts that are exposed to the cooling water and find all items that could contribute to the pollutant, chromium, or zinc. Each pump, valve, and section of piping, as well as the makeup of the cooling tower itself would need to be reviewed for chemical composition. At the same time the cooling loop must be checked for any area in which it may be able to induct something from outside into the cooling loop.

A balance of the system would say that whatever comes in, plus whatever is added directly or indirectly, in the form of corrosion or induction, must equal what is going out.

Results

Virginia American Water Company supplies incoming water. This water which is used in the industrial sector of Hopewell, meets all drinking water standards. Test results from Virginia American can be found in Appendix B. Talking with the water company chemist, it was noted that traces of metals do appear from time to time, but all are well below limits required by drinking water standards. Based on the results from the testing and the standards that drinking water imposes, it can be expected that there would be none of the 126 priority pollutants. However, minor traces of chromium or zinc can not be ruled out. Yet, these traces would be well below the outfall discharge standards and would be infrequent. An example of metal traces can be found on the report sheets in Appendix B.

A list of all MSDS sheets for additives to the cooling tower can be found in Appendix C. There are no ingredients within the additives that will contribute to the 126 Priority Pollutants, Chromium or Zinc.

In Appendix D. there is a description of the cooling and secondary cooling system. These two systems make up the entire cooling loop. Description and use of the drawings studied the following areas:

- Starting with the water in the cooling tower, the cooling tower's construction and all components that come in contact with the water. These components which can be found in Appendix E1., consist of the corrugation panels made of glass reinforced plastic (GRP), lumber, stainless steel bolts, stainless steel screw shank nails, polyvinyl chloride (PVC) film fill, PVC eliminators, PVC nozzles / diffusers, concrete and PVC pipe. Of these components, only the wood, (see MSDS sheet in Appendix E1), contains Chromated Copper Arsenate, that the company lists as non-leachable.

- The water flows by gravity through the concrete flue into the cooling tower pump house's concrete sump. From there it is picked up by the cooling water pumps and is propelled through the remainder of the loop until its return to the cooling tower. The pumps' see Appendix E2, drawing shows all components that come in contact with the cooling water. These are listed on the pump drawing, numbers 1 through 29, none of which would add pollutants or zinc, but the stainless steel could add traces of chromium.

- The pumps propel the water through large fiberglass pipes into the steam turbine building. At this point the cooling water branches into main and secondary cooling water. The main cooling water enters the main condenser and returns to the cooling tower by way of fiberglass piping. Appendix E3, shows the main condenser and the material specification sheet. The tubes are stainless steel and the tube sheets are epoxy coated.

- The secondary cooling water branch winds through the steam turbine building feeding the close cooling water heat exchanger and the steam turbine lube oil cooler heat exchanger, before going on to the gas turbines. The close cooling water heat exchanger specification sheet can be found in Appendix E4. The Heat exchanger is comprised of steel and poses no pollution problems.

- The other heat exchanger in the steam turbine building is the lube oil heat exchanger for the steam turbine lube oil system. This exchanger can be found in appendix E5. Again, this heat exchanger presents no problem areas. After the cooling water passes through these two heat exchangers it ties into the main condenser outlet and returns to the cooling tower.

- The secondary cooling system leaves the steam turbine building and runs along the outside of the gas turbine building and services the three gas turbines. Each gas turbine has a lube oil cooler and its generator has a heat exchanger for cooling. Once through these coolers the water returns by a separate pipe and ties in to the cooling tower. The gas turbine lube oil cooler specifications are listed in Appendix E6, and the generator heat exchanger is listed in Appendix E7. From the composition of these heat exchangers, there would be no pollution, chromium or zinc problems.

- The last part of the system is the piping, which puts it all together. Appendix E8 shows drawings of the different types of pipe and valves, which are used. The large piping is a resin type and the smaller sizes are carbon steel. The valves in the system have a stainless steel disk but the remanding parts of the valves, which contact the water, are rubber.

- Additional inspection of the system indicates that there are no known areas in which the water could draw pollutants into the system. The system inside pressure is greater than the outside pressure.

- In Appendix E9, data on Stainless Steel Density, Chromium content and corrosion factors can be found. Appendix E10 shows the corrosion coupon testing results.

- Three case studies were constructed using the data from Appendix E9.
  - From the corrosion coupons the worst case would be if there were no corrosion inhibitor and we use the worst results of carbon steel in city water. The second worst case is the highest corrosion level found at Hopewell with corrosion inhibitor. The third case is the normal or least amount of corrosion seen at Hopewell.
  - The chromium content for 316 Stainless Steel can range from 16 to 18%; we will use the worst case of 18%.
  - 316 Stainless Steel is close in density to 304 Stainless Steel, with 316 being the lesser density.
  - The amount of cooling water used in 1998 is average to below average for most years.
  - The salt water study by the Hendrix Group indicates that under salt water conditions 316 Stainless Steel is at least 1000 times less corrosive than the 400 series Stainless Steel, therefore 316 would be more than a 1000 times less corrosive than Carbon Steel.
  - After working the conversions, one can see that the first study is still within the 0.2 PPM limit. Likewise the second and third cases are even less. Comparisons with the lab results from the previous years' case studies reflect the high end of the Stainless Steel corrosion.

- Zinc was not easily found in the study of the cooling loop, yet it appears in the testing. It is believed that there may be some anodes of zinc not listed in the drawings, but could come from the water source. Regardless of the source, the levels have been low over the past nine years as shown in the testing in Appendix F.

- Of the 126 Priority Pollutants none are brought in, added, or absorbed by the water in the cooling loop. Again, testing in Appendix F would indicate minor spikes that can be attributed to the high chemical concentration in the area.

Conclusions and Recommendations

1. **Chromium** Based on the information in Appendix E10, the following would have to take place before the corrosion rate would be high enough to exceed the limit of the permit. It can be seen that the highest corrosion rates would occur only when there was no corrosion inhibitor used. Also there was a rise in corrosion rate when pH went out of limits in May of 1998. At the same time the cycles in the tower would have to be low in order to keep scaling from protecting the metal. Therefore, corrosion inhibitors would have to be at zero and the pH would have to be at the extremes to create a corrosion rate of greater than 9.5 mils per year, and cycles would have to be zero. In ten years of operation the plant has run out of corrosion inhibitor twice for a total of less than 4 days of operation. There have been three pH excursions each lasting less than a day. Based on these numbers, the odds of running out of inhibitor is 0.001096 and the odds of having a pH excursion are 0.000822. The odds of having both at the same time are 0.0000009 or literally less than one in a million. To have the cycles in the cooling tower low enough to keep from having scale prevent corrosion would require the tower to be drained and refilled, this has happened only three times in the life of the plant. This would drive the odds too less than one in a billion. Actual data in Appendix F shows that Chromium has never exceeded 20% of the permit limit. The actual data appears to run at a lower rate than the test cases would predict.

2. **Zinc** Corrosion, which would create high zinc levels, would have to be the same conditions as chromium. The first page of Appendix F is a summary of Chromium and Zinc. Though not identical, the trend is the same. As one metal goes up the other it usually higher as well. It would logically follow that the same conditions required to make chromium exceed the permit limit would also apply to Zinc.

3. **126 Priority Pollutants** Knowing that the water coming into the plant and the additives do not contribute to any pollutants, the water leaving the plant will not distribute any pollutants to the area. Appendix F, test results demonstrate this fact.

4. **Recommendation** Based on the data, Hopewell Cogeneration Facility should not be required to test for Chromium or Zinc on a monthly bases. In part I D, of the permit, substance monitoring requirement, Chromium and Zinc are covered as a periodic check.

Henry, Steve

From: Henry, Steve
Sent: Tuesday, February 26, 2008 12:54 PM
To: Hopewell-Plant
Subject: Cleaning Day

1. Clean Control Room. Wipe down, Mop, stow. (Jeff, Ken)
2. Move plywood and cribbing into Gt1 bay. (Jamie, Tim)
3. Stow heat trace parts between gt2 and 3. (Tim)
4. Clean-up oil on floor by closed cooling water pumps, find source. (Rudy, Chris)
5. Check in parts. (Mike)
6. Clean-up c/t pump house. (Joe, Dex, Dave)
7. Check-out loading Ramp. (Steve)
8. Paint rust spots on emergency diesel tank. (Scott, Chuck)
9. Stow pallet of TSP in demin annex. (Andrew, Enrique, Greg)
10. Wash down acid and caustic skids. (Andrew, Enrique, Greg)
11. Cut-up barrels in demin annex. (Jamie, Tim)
12. Clean-up oil around raw water pumps. (Steve)
13. Wash down area around regen pumps. (Andrew, Enrique, Greg)
14. Set-up shelves by gt1 breaker. (Mike, Steve)
15. Clean-up waste basin. (Tim, Jamie)

Steve Henry

Production Support Manager
Suez Energy Generation NA
Hopewell Cogeneration Facility
1114 Hercules Rd. Hopewell, VA 23860
804-458-0700 ext. 303 fax 804-458-0794
steve.henry@suezenergyna.com

A. EFFLUENT LIMITATIONS AND MONITORING REQUIREMENTS -- Outfall 101

1. During the period beginning with the permit's effective date and lasting until the permit's expiration date the permittee is authorized to discharge from outfall serial number 101 (cooling tower blowdown)

Such discharges shall be limited and monitored at Outfall 101 by the permittee as specified below.

EFFLUENT CHARACTERISTICS	DISCHARGE LIMITATIONS						MONITORING REQUIREMENTS	
	MONTHLY AVERAGE		WEEKLY AVG.	MINIMUM	MAXIMUM		FREQUENCY	SAMPLE TYPE
	mg/l	kg/d			mg/l	kg/d		
Flow (MGD)	NL		NA	NA	NL		1/Month	Estimate
Chromium, Total	0.2	0.24	NA	NA	0.2	0.36	1/Month	24 Hour Composite
Zinc, Total	1.0	1.21	NA	NA	1.0	1.80	1/Month	24 Hour Composite
Free Available Chlorine[2]	0.2	NA	NA	NA	0.5	NA	1/Month	Grab
The 126 priority pollutants contained in chemicals added for cooling tower maintenance shall be non-detectable except chromium and zinc.[3]							1/Quarter	24 Hour Composite*

* Except that grab samples shall be collected for total cyanide, total phenols, and volatile organics.

2. See Special Condition E.7.

3. See Special Condition E.2.

E. Other Requirements or Special Conditions

1. This permit shall be modified, or alternatively, revoked and reissued, to comply with any applicable effluent standard, limitation or prohibition for a pollutant which is promulgated or approved under Section 307(a)(2) of the Clean Water Act, if the effluent standard, limitation or prohibition so promulgated or approved:

   a. Is more stringent than any effluent limitation on the pollutant already in the permit; or

   b. Controls any pollutant not limited in the permit.

2. As an alternative to routine monitoring by sampling and analysis for the 126 priority pollutants (including chromium and zinc) on Outfall 101, compliance may be determined by engineering calculations submitted by the permittee. The engineering calculations must demonstrate that the regulated pollutants are not detectable in the final discharge by the analytical methods in 40 CFR Part 136.

3. Any and all product, materials, industrial wastes, and/or other wastes resulting from the purchase, sale, mining, extraction, transport, preparation, and/or storage of raw or intermediate materials, final product, by-product or wastes, shall be handled, disposed of, and/or stored in such a manner so as not to permit a discharge of such product, materials, industrial wastes, and/or other wastes to State waters, except as expressly authorized.

4. A class III operator is required for the wastewater treatment facilities.

5. There shall be no discharge of polychlorinated biphenyl compounds in amounts equal to or greater than that detectable by EPA test methods specified in Federal Register 40 CFR Part 136 Guidelines for Establishing Test Procedures for the Analysis of Pollutants.

6. The permittee shall notify the Department as soon as they know or have reason to believe:

   a. That any activity has occurred or will occur which would result in the discharge, on a routine or frequent basis, of any toxic pollutant which is not limited in this permit, if that discharge will exceed the highest of the following notification levels:
      (1) One hundred micrograms per liter (100 ug/l);
      (2) Two hundred micrograms per liter (200 ug/l) for acrolein and acrylonitrile; five hundred micrograms per liter (500 ug/l) for 2,4-dinitrophenol and for 2-methyl-4,6-dinitrophenol; and one milligram per liter (1 mg/l) for antimony;
      (3) Five (5) times the maximum concentration value reported for that pollutant in the permit application; or
      (4) The level established by the Board.

   b. That any activity has occurred or will occur which would result in any discharge, on a non-routine or infrequent basis, of a toxic pollutant which is not limited in this permit, if that discharge will exceed the highest of the following notification levels:
      (1) Five hundred micrograms per liter (500 ug/l);
      (2) One milligram per liter (1 mg/l) for antimony;
      (3) Ten (10) times the maximum concentration value reported for that pollutant in the permit application.
      (4) The level established by the Board

RECEIVED JUL 27 1999

American Water Works Service Company, Inc.

Quality Control and Research Laboratory – 1115 South Illinois Street – Belleville, Illinois 62220-3102
Phone: (618)235-3600 - Fax: (618)235-6349

Inorganic Chemical Analysis Report

VIRGINIA-AMERICAN WATER CO
HOPEWELL DISTRICT
900 INDUSTRIAL STREET
PO BOX 60
HOPEWELL VA 23860-0060

Date of Report: 07/21/99
Certfification Number: 00001
PWS ID: 3670800
County:

Send Report to: J. HANCHAK
B. FRYE
E. LOWTHER
LAB DOCUMENT

Report Summary

Location:	IND	Collection Date:	06/23/99	Received Date:	06/24/99
Sample Type	EFF	CollectionTime:	14:20	Received Time:	10:00
Sampler:	B. FRYE			Received Temp:	5

Disclosures:

Results are at or above the reporting limit for the following analytes:

SULFATE	CHLORIDE	SODIUM
POTASSIUM	MAGNESIUM	CALCIUM
BARIUM	MOLYBDENUM	STRONTIUM
NICKEL	ALUMINUM	

No deviations from the method criteria were noted unless listed below.

Note: This report may not be reproduced, except in full, without written approval from American Water Works Service Co., Inc.
If you have any questions, concerning this report, please don't hesitate to call us at (618) 235-3600.

Reviewed By: Cindy S. Nettrour, QA/QC Officer **Finalized By**: John T. Pivinski, Laboratory Director

Report Number: CC23119

See back of page for explanation of terms used.

RECEIVED JUL 2 7 1999

Report Details

Sample Status: VALIDAT QUEU

Sample Number: CC23119	Method	State Code	MCL	Reporting Limit	Result	Unit	Analyst	Analysis Date
Minerals								
CHLORIDE	300.0		250(s)	1.0	22.3	mg/l	TSP	06/30/99
FLUORIDE	300.0		4p/2s	0.10	ND	mg/l	TSP	06/30/99
SULFATE	300.0		250(s)	0.5	46.9	mg/l	TSP	06/30/99

Sample Status: VALIDAT QUEU

Sample Number: CC23120	Method	State Code	MCL	Reporting Limit	Result	Unit	Analyst	Analysis Date
CYANIDE	335.4		0.2	0.02	ND	mg/l	PW	06/29/99

Sample Status: VALIDAT QUEU

Sample Number: CC23121	Method	State Code	MCL	Reporting Limit	Result	Unit	Analyst	Analysis Date
ICP Metals								
IRON	200.7		0.3(s)	0.1	ND	mg/l	JZ	06/30/99
CALCIUM	200.7			1	18	mg/l	JZ	06/30/99
MAGNESIUM	200.7			1	4	mg/l	JZ	06/30/99
POTASSIUM	200.7			1	4	mg/l	JZ	06/30/99
SODIUM	200.7			1	20	mg/l	JZ	06/30/99
SILICA	200.7			10	ND	mg/l	JZ	06/30/99

Sample Status: VALIDAT QUEU

Sample Number: CC23121	Method	State Code	MCL	Reporting Limit	Result	Unit	Analyst	Analysis Date
ICP/MS Metals								
ALUMINUM	200.8		0.20(s)	0.010	0.015	mg/l	TA	07/14/99
ANTIMONY	200.8		0.006	0.0004	ND	mg/l	TA	07/14/99
ARSENIC	200.8		0.05	0.001	ND	mg/l	TA	07/14/99
BARIUM	200.8		2	0.001	0.038	mg/l	TA	07/14/99
BERYLLIUM	200.8		0.004	0.0003	ND	mg/l	TA	07/14/99
CADMIUM	200.8		0.005	0.001	ND	mg/l	TA	07/14/99
CHROMIUM	200.8		0.1	0.010	ND	mg/l	TA	07/14/99
COPPER	200.8		1.3	0.010	ND	mg/l	TA	07/14/99
LEAD	200.8		0.015	0.001	ND	mg/l	TA	07/14/99
MANGANESE	200.8		0.05(s)	0.010	ND	mg/l	TA	07/14/99
NICKEL	200.8			0.0005	0.0018	mg/l	TA	07/14/99
SELENIUM	200.8		0.05	0.002	ND	mg/l	TA	07/14/99
SILVER	200.8		0.1(s)	0.001	ND	mg/l	TA	07/14/99
THALLIUM	200.8		0.002	0.0003	ND	mg/l	TA	07/14/99
ZINC	200.8		5.0(s)	0.010	ND	mg/l	TA	07/14/99
BORON	200.8			0.050	ND	mg/l	TA	07/14/99
COBALT	200.8			0.010	ND	mg/l	TA	07/14/99
MOLYBDENUM	200.8			0.001	0.002	mg/l	TA	07/14/99
STRONTIUM	200.8			0.050	0.087	mg/l	TA	07/14/99
URANIUM	200.8			0.010	ND	mg/l	TA	07/14/99
VANADIUM	200.8			0.050	ND	mg/l	TA	07/14/99

Sample Status: VALIDAT QUEU

Sample Number: CC23122	Method	State Code	MCL	Reporting Limit	Result	Unit	Analyst	Analysis Date
MERCURY	245.2		0.002	0.0005	ND	mg/l	SE	07/01/99

Report Number: CC23119

See back of page for explanation of terms used.

RECEIVED APR 1 1999

Chemical Analysis Report
American Water Works Service Company, Inc.

Quality Control and Research Laboratory - 1115 South Illinois Street - Belleville, Illinois 62220-3102
(618)235-3600 - Fax: (618) 235-6349

VIRGINIA-AMERICAN WATER COMPANY
HOPEWELL DISTRICT
900 INDUSTRIAL STREET
PO BOX 60
HOPEWELL VA 23860-0060

Date of Report: 3/25/99
Certification Number: 00001
PWS ID: 3670800
County:

Send Report to

J. HANCHAK
B. FRYE
E. LOWTHER
LAB DOCUMENT

Sample Information

Location: INDUSTRIAL-D
Sample Type EFF
Sampler: FRYE

Collection Date: 2/23/99
CollectionTime: 14:00
* Hits: 0

Received Date: 2/24/99
Received Time: 10:00
Received Temp: 3

Report Number 02241627
Sample Number CC06274

Sample Status: REPORT QUEUE

Regulated Semi Volatiles	Method	State Code	MCL	Reporting Limit	Result	Unit	Analyst	Analysis Date
ALACHLOR	525.2		2	0.2	ND	ug/l	WM	3/9/99
ATRAZINE	525.2		3	0.1	ND	ug/l	WM	3/9/99
BENZO(A)PYRENE	525.2		0.2	0.02	ND	ug/l	WM	3/9/99
LORDANE	525.2		2	0.1	ND	ug/l	WM	3/9/99
2-ETHYLHEXYL)ADIPATE	525.2		400	0.6	ND	ug/l	WM	3/9/99
DI(2-ETHYLHEXYL)PHTHALATE	525.2		6	0.6	ND	ug/l	WM	3/9/99
ENDRIN	525.2		2	0.01	ND	ug/l	WM	3/9/99
HEPTACHLOR	525.2		0.4	0.01	ND	ug/l	WM	3/9/99
HEPTACHLOR EPOXIDE	525.2		0.2	0.01	ND	ug/l	WM	3/9/99
HEXACHLOROBENZENE	525.2		1	0.1	ND	ug/l	WM	3/9/99
HEXACHLOROCYCLOPENTADIENE	525.2		50	0.1	ND	ug/l	WM	3/9/99
LINDANE	525.2		0.2	0.02	ND	ug/l	WM	3/9/99
METHOXYCHLOR	525.2		40	0.1	ND	ug/l	WM	3/9/99
SIMAZINE	525.2		4	0.07	ND	ug/l	WM	3/9/99
TOXAPHENE	525.2		3	1.0	ND	ug/l	WM	3/9/99
ALDRIN	525.2			0.075	ND	ug/l	WM	3/9/99
BROMACIL	525.2			01.0	ND	ug/l	WM	3/9/99
BUTACHLOR	525.2			0.3	ND	ug/l	WM	3/9/99
4,4'-DDT	525.2			0.02	ND	ug/l	WM	3/9/99
DIELDRIN	525.2			0.02	ND	ug/l	WM	3/9/99
METOLACHLOR	525.2			0.8	ND	ug/l	WM	3/9/99
METRIBUZIN	525.2			0.2	ND	ug/l	WM	3/9/99
PROPACHLOR	525.2			0.5	ND	ug/l	WM	3/9/99
TRIFLURALIN	525.2			2.0	ND	ug/l	WM	3/9/99

Cindy S. Nettrour, Quality Control Manager
John T. Pivinski, Laboratory Director

ND = Not Detected Above Reporting Limit

RECEIVED APR 1 1999

Sample Information					
Location:	INDUSTRIAL	Collection Date:	2/23/99	Received Date:	2/24/99
Sample Type	EFF	CollectionTime:	14:00	Received Time:	10:00
Sampler:	FRYE	* Hits:	0	Received Temp:	3

Report Number 02241627
Sample Number CC06275
Sample Status: REPORT QUEUE

Carbamates	Method	State Code	MCL	Reporting Limit	Result	Unit	Analyst	Analysis Date
ALDICARB	531.1		3	0.5	ND	ug/l	LZ	2/25/99
ALDICARB SULFONE	531.1		2	0.5	ND	ug/l	LZ	2/25/99
ALDICARB SULFOXIDE	531.1		4	0.5	ND	ug/l	LZ	2/25/99
CARBOFURAN	531.1		40	0.2	ND	ug/l	LZ	2/25/99
OXAMYL (VYDATE)	531.1		200	2.0	ND	ug/l	LZ	2/25/99
CARBARYL	531.1			0.7	ND	ug/l	LZ	2/25/99
3-HYDROXYCARBOFURAN	531.1			0.8	ND	ug/l	LZ	2/25/99
METHIOCARB	531.1			4	ND	ug/l	LZ	2/25/99
METHOMYL	531.1			0.5	ND	ug/l	LZ	2/25/99

Report Number 02241627
Sample Number CC06277
Sample Status: REPORT QUEUE

	Method	State Code	MCL	Reporting Limit	Result	Unit	Analyst	Analysis Date
DIQUAT	549.1		20	0.4	ND	ug/l	LH	3/3/99

Report Number 02241627
Sample Number CC06278
Sample Status: REPORT QUEUE

	Method	State Code	MCL	Reporting Limit	Result	Unit	Analyst	Analysis Date
ENDOTHALL	548.1		100	9.0	ND	ug/l	SAM	3/1/99

Report Number 02241627
Sample Number CC06279
Sample Status: REPORT QUEUE

	Method	State Code	MCL	Reporting Limit	Result	Unit	Analyst	Analysis Date
GLYPHOSATE	547		700	6.0	ND	ug/l	LH	3/2/99

Report Number 02241627
Sample Number CC06280
Sample Status: REPORT QUEUE

PCB's	Method	State Code	MCL	Reporting Limit	Result	Unit	Analyst	Analysis Date
PCB 1016	508		0.5	0.08	ND	ug/l	JG	3/12/99
PCB 1221	508		0.5	0.4	ND	ug/l	JG	3/12/99
PCB 1232	508		0.5	0.4	ND	ug/l	JG	3/12/99
PCB 1242	508		0.5	0.3	ND	ug/l	JG	3/12/99
PCB 1248	508		0.5	0.1	ND	ug/l	JG	3/12/99
PCB 1254	508		0.5	0.1	ND	ug/l	JG	3/12/99
PCB 1260	508		0.5	0.2	ND	ug/l	JG	3/12/99
PCB 1262	508		0.5	0.1	ND	ug/l	JG	3/12/99

Cindy S. Nettrour, Quality Control Manager
John T. Pivinski, Laboratory Director

ND = Not Detected Above Reporting Limit

RECEIVED APR 1 1999

Sample Information

Location: INDUSTRIAL
Sample Type EFF
Sampler: FRYE

Collection Date: 2/23/99
CollectionTime: 14:00
* Hits: 0

Received Date: 2/24/99
Received Time: 10:00
Received Temp: 3

Report Number 02241627
Sample Number CC06282

Sample Status: REPORT QUEUE

Herbicides	Method	State Code	MCL	Reporting Limit	Result	Unit	Analyst	Analysis Date
DALAPON	515.1		200	1.0	ND	ug/l	MM	3/10/99
2,4-D	515.1		70	0.1	ND	ug/l	MM	3/10/99
DINOSEB	515.1		7	0.2	ND	ug/l	MM	3/10/99
PENTACHLOROPHENOL	515.1		1	0.04	ND	ug/l	MM	3/10/99
PICLORAM	515.1		500	0.1	ND	ug/l	MM	3/10/99
2,4,5-TP (SILVEX)	515.1		50	0.2	ND	ug/l	MM	3/10/99
ACIFLUORFEN	515.1			1	ND	ug/l	MM	3/10/99
2,4-DB	515.1			1	ND	ug/l	MM	3/10/99
DACTHAL	515.1			1	ND	ug/l	MM	3/10/99
DICAMBA	515.1			0.08	ND	ug/l	MM	3/10/99
3,5-DICHLOROBENZOIC ACID	515.1			1	ND	ug/l	MM	3/10/99
DICHLORPROP	515.1			1	ND	ug/l	MM	3/10/99
2,4,5-T	515.1			1	ND	ug/l	MM	3/10/99

Report Number 02241627
Sample Number CC06284

Sample Status: REPORT QUEUE

Nematocides	Method	State Code	MCL	Reporting Limit	Result	Unit	Analyst	Analysis Date
DIBROMOCHLOROPROPANE (DBCP)	504.1		0.2	0.01	ND	ug/l	LG	3/9/99
ETHYLENE DIBROMIDE (EDB)	504.1		0.05	0.01	ND	ug/l	LG	3/9/99

Cindy S. Nettrour, Quality Control Manager
John T. Pivinski, Laboratory Director

ND = Not Detected Above Reporting Limit

RECEIVED APR 1 1999

Chemical Analysis Report
American Water Works Service Company, Inc.

Quality Control and Research Laboratory - 1115 South Illinois Street - Belleville, Illinois 62220-3102
(618)235-3600 - Fax: (618) 235-6349

VIRGINIA-AMERICAN WATER COMPANY
HOPEWELL DISTRICT
900 INDUSTRIAL STREET
PO BOX 60
HOPEWELL VA 23860-0060

Date of Report: 3/25/99
Certfification Number: 00001
PWS ID: 3670800
County:

Send Report to

J. HANCHAK
B. FRYE
E. LOWTHER
LAB DOCUMENT

Sample Information
Location: INDUSTRIAL
Sample Type EFF
Sampler: FRYE

Collection Date: 2/23/99
CollectionTime: 14:00
* Hits: 0

Received Date: 2/24/99
Received Time: 10:00
*** Received Temp: 3

Report Number 02241627
Sample Number CC06276

Sample Status: INACTIVE

	Method	State Code	MCL	Reporting Limit	Result	Unit	Analyst	Analysis Date
CYANAZINE	525.2			0.1	ND	ug/L	WM	3/3/03

Cindy S. Nettrour, Quality Control Manager
John T. Pivinski, Laboratory Director

ND = Not Detected Above Reporting Limit

RECEIVED
DEC 11 1998

Chemical Analysis Report
American Water Works Service Company, Inc.

Quality Control and Research Laboratory - 1115 South Illinois Street - Belleville, Illinois 62220-3102
(618)235-3600 - Fax: (618) 235-6349

VIRGINIA AMERICAN WATER COMPANY
HOPEWELL DISTRICT
PO BOX 60
900 INDUSTRIAL STREET
HOPEWELL VA 23860

Date of Report: 12/8/98
Certfification Number: 00001
PWS ID: 3670800
County:

Send Report to

E. LOWTHER
B. FRYE
J. HANCHAK
J. WATSON
LAB DOCUMENT

Sample Information

Report Number 11181917
Sample Number CB41288
Sample Status: INACTIVE

Location: INDUSTRIAL
Sample Type EFF
Sampler: FRYE

Collection Date: 11/17/98
CollectionTime: 12:15

Received Date: 11/18/98
Received Time: 10:00
Received Temp: 5

Component Name	Method	State Code	MCL	Reporting Limit	Result	Unit	Analyst	Analysis Date
BENZENE	524.2		5	0.5	ND	ug/l	JMB	11/21/98
CARBON TETRACHLORIDE	524.2		5	0.5	ND	ug/l	JMB	11/21/98
CHLOROBENZENE (MONO)	524.2		100	0.5	ND	ug/l	JMB	11/21/98
cis-1,2-DICHLOROETHYLENE	524.2		70	0.5	ND	ug/l	JMB	11/21/98
1,2-DICHLOROBENZENE (ORTHO)	524.2		600	0.5	ND	ug/l	JMB	11/21/98
1,4-DICHLOROBENZENE (PARA)	524.2		75	0.5	ND	ug/l	JMB	11/21/98
1,2-DICHLOROETHANE	524.2		5	0.5	ND	ug/l	JMB	11/21/98
1,1-DICHLOROETHYLENE	524.2		7	0.5	ND	ug/l	JMB	11/21/98
1,2-DICHLOROPROPANE	524.2		5	0.5	ND	ug/l	JMB	11/21/98
ETHYLBENZENE	524.2		700	0.5	ND	ug/l	JMB	11/21/98
METHYLENE CHLORIDE (DICHLOROMETHANE	524.2		5	0.5	ND	ug/l	JMB	11/21/98
STYRENE	524.2		100	0.5	ND	ug/l	JMB	11/21/98
TETRACHLOROETHYLENE (PCE)	524.2		5	0.5	ND	ug/l	JMB	11/21/98
TOLUENE	524.2		1000	0.5	ND	ug/l	JMB	11/21/98
trans-1,2-DICHLOROETHYLENE	524.2		100	0.5	ND	ug/l	JMB	11/21/98
1,2,4-TRICHLOROBENZENE	524.2		70	0.5	ND	ug/l	JMB	11/21/98
1,1,1-TRICHLOROETHANE	524.2		200	0.5	ND	ug/l	JMB	11/21/98
1,1,2-TRICHLOROETHANE	524.2		5	0.5	ND	ug/l	JMB	11/21/98
TRICHLOROETHYLENE (TCE)	524.2		5	0.5	ND	ug/l	JMB	11/21/98
VINYL CHLORIDE	524.2		2	0.5	ND	ug/l	JMB	11/21/98
XYLENES, TOTAL	524.2		10000	0.5	ND	ug/l	JMB	11/21/98
ACETONE	524.2			0.5	ND	ug/l	JMB	11/21/98
ACRYLONITRILE	524.2			0.5	ND	ug/l	JMB	11/21/98
ALLYL CHLORIDE	524.2			0.5	ND	ug/l	JMB	11/21/98
BROMOBENZENE	524.2			0.5	ND	ug/l	JMB	11/21/98
BROMOCHLOROMETHANE	524.2			0.5	ND	ug/l	JMB	11/21/98

* **NOTE: RESAMPLE OF CB37920-21 AS REQUESTED BY UTILITY.**

Cindy S. Nettrour, Quality Control Manager
John T. Pivinski, Laboratory Director

ND = Not Detected Above Reporting Limit

Sample Information

Report Number 11181917
Sample Number CB41288

Sample Status: INACTIVE

Location: INDUSTRIAL
Sample Type EFF
Sampler: FRYE

Collection Date: 11/17/98
CollectionTime: 12:15

Received Date: 11/18/98
Received Time: 10:00
Received Temp: 5

Component Name	Method	State Code	MCL	Reporting Limit	Result	Unit	Analyst	Analysis Date
BROMODICHLOROMETHANE	524.2			0.5	11.6	ug/l	JMB	11/21/98
BROMOFORM	524.2			0.5	ND	ug/l	JMB	11/21/98
BROMOMETHANE	524.2			0.5	ND	ug/l	JMB	11/21/98
2-BUTANONE (MEK)	524.2			0.5	0.8	ug/l	JMB	11/21/98
CARBON DISULFIDE	524.2			0.5	ND	ug/l	JMB	11/21/98
CHLOROACETONITRILE	524.2			0.5	ND	ug/l	JMB	11/21/98
1-CHLOROBUTANE	524.2			0.5	ND	ug/l	JMB	11/21/98
CHLOROETHANE	524.2			0.5	ND	ug/l	JMB	11/21/98
CHLOROFORM	524.2			0.5	17.7	ug/l	JMB	11/21/98
CHLOROMETHANE	524.2			0.5	ND	ug/l	JMB	11/21/98
2-CHLOROTOLUENE	524.2			0.5	ND	ug/l	JMB	11/21/98
4-CHLOROTOLUENE	524.2			0.5	ND	ug/l	JMB	11/21/98
cis-1,3-DICHLOROPROPENE	524.2			0.5	ND	ug/l	JMB	11/21/98
DIBROMOCHLOROMETHANE	524.2			0.5	3.8	ug/l	JMB	11/21/98
DIBROMOMETHANE	524.2			0.5	ND	ug/l	JMB	11/21/98
1,3-DICHLOROBENZENE (META)	524.2			0.5	ND	ug/l	JMB	11/21/98
DICHLORODIFLUOROMETHANE	524.2			0.5	ND	ug/l	JMB	11/21/98
1,1-DICHLOROETHANE	524.2			0.5	ND	ug/l	JMB	11/21/98
1,3-DICHLOROPROPANE	524.2			0.5	ND	ug/l	JMB	11/21/98
2,2-DICHLOROPROPANE	524.2			0.5	ND	ug/l	JMB	11/21/98
',1-DICHLOROPROPANONE	524.2			0.5	ND	ug/l	JMB	11/21/98
1,1-DICHLOROPROPENE	524.2			0.5	ND	ug/l	JMB	11/21/98
DIETHYL ETHER	524.2			0.5	ND	ug/l	JMB	11/21/98
ETHYL METHACRYLATE	524.2			0.5	ND	ug/l	JMB	11/21/98
FLUOROTRICHLOROMETHANE	524.2			0.5	ND	ug/l	JMB	11/21/98
HEXACHLOROBUTADIENE	524.2			0.5	ND	ug/l	JMB	11/21/98
HEXACHLOROETHANE	524.2			0.5	ND	ug/l	JMB	11/21/98
2-HEXANONE	524.2			0.5	ND	ug/l	JMB	11/21/98
ISOPROPYLBENZENE	524.2			0.5	ND	ug/l	JMB	11/21/98
4-ISOPROPYLTOLUENE	524.2			0.5	ND	ug/l	JMB	11/21/98
METHYLACRYLATE	524.2			0.5	ND	ug/l	JMB	11/21/98
METHYLACRYLONITRILE	524.2			0.5	ND	ug/l	JMB	11/21/98
METHYL IODIDE	524.2			0.5	ND	ug/l	JMB	11/21/98
METHYL METHACRYLATE	524.2			0.5	ND	ug/l	JMB	11/21/98
4-METHYL-2-PENTANONE (MIBK)	524.2			0.5	ND	ug/l	JMB	11/21/98
METHYL tert-BUTYL ETHER (MTBE)	524.2			0.5	0.8	ug/l	JMB	11/21/98
NAPHTHALENE	524.2			0.5	ND	ug/l	JMB	11/21/98
NITROBENZENE	524.2			0.5	ND	ug/l	JMB	11/21/98
2-NITROPROPANE	524.2			0.5	ND	ug/l	JMB	11/21/98
n-BUTYLBENZENE	524.2			0.5	ND	ug/l	JMB	11/21/98
n-PROPYLBENZENE	524.2			0.5	ND	ug/l	JMB	11/21/98
PENTACHLOROETHANE	524.2			0.5	ND	ug/l	JMB	11/21/98
PROPRIONITRILE	524.2			0.5	ND	ug/l	JMB	11/21/98
sec-BUTYLBENZENE	524.2			0.5	ND	ug/l	JMB	11/21/98
tert-BUTYLBENZENE	524.2			0.5	ND	ug/l	JMB	11/21/98

Cindy S. Nettrour, Quality Control Manager
John T. Pivinski, Laboratory Director

ND = Not Detected Above Reporting Limit

Sample Information

Report Number 11181917
Sample Number CB41288

Sample Status: INACTIVE

Location: INDUSTRIAL
Sample Type EFF
Sampler: FRYE

Collection Date: 11/17/98
CollectionTime: 12:15

Received Date: 11/18/98
Received Time: 10:00
Received Temp: 5

Component Name	Method	State Code	MCL	Reporting Limit	Result	Unit	Analyst	Analysis Date
1,1,1,2-TETRACHLOROETHANE	524.2			0.5	ND	ug/l	JMB	11/21/98
1,1,2,2-TETRACHLOROETHANE	524.2			0.5	ND	ug/l	JMB	11/21/98
TETRAHYDROFURAN	524.2			0.5	ND	ug/l	JMB	11/21/98
trans-1,3-DICHLOROPROPENE	524.2			0.5	ND	ug/l	JMB	11/21/98
trans-1,4-DICHLORO-2-BUTENE	524.2			0.5	ND	ug/l	JMB	11/21/98
1,2,3-TRICHLOROBENZENE	524.2			0.5	ND	ug/l	JMB	11/21/98
1,2,3-TRICHLOROPROPANE	524.2			0.5	ND	ug/l	JMB	11/21/98
1,2,4-TRIMETHYLBENZENE	524.2			0.5	ND	ug/l	JMB	11/21/98
1,3,5-TRIMETHYLBENZENE	524.2			0.5	ND	ug/l	JMB	11/21/98

Cindy S. Nettrour, Quality Control Manager
John T. Pivinski, Laboratory Director

ND = Not Detected Above Reporting Limit

RECEIVED JUL 19 1999

American Water Works Service Company, Inc.

Quality Control and Research Laboratory – 1115 South Illinois Street – Belleville, Illinois 62220-3102
Phone: (618)235-3600 - Fax: (618)235-6349

Disinfection By-Products (DBP) Analysis Report

VIRGINIA-AMERICAN WATER COMPANY
HOPEWELL DISTRICT
900 INDUSTRIAL STREET
PO BOX 60
HOPEWELL VA 23860-0060

Date of Report: 07/15/99
Certfification Number: 00001
PWS ID: 3670800
County:

Send Report to: J. HANCHAK
B. FRYE
E. LOWTHER
LAB DOCUMENT

Report Summary

Location:	IND	Collection Date:	06/23/99	Received Date:	06/25/99
Sample Type	EFF	CollectionTime:	14:20	Received Time:	10:00
Sampler:	B. FRYE		-	Received Temp:	5

Disclosures:

Results are at or above the reporting limit for the following analytes:

TRICHLOROACETIC ACID
DICHLOROACETIC ACID
MONOCHLOROACETIC ACID

No deviations from the method criteria were noted unless listed below.

Note: This report may not be reproduced, except in full, without written approval from American Water Works Service Co., Inc.
If you have any questions, concerning this report, please don't hesitate to call us at (618) 235-3600.

Reviewed By: Cindy S. Nettrour, QA/QC Officer

Finalized By: John T. Pivinski, Laboratory Director

Report Number: CC23211

See back of page for explanation of terms used.

Report Details

RECEIVED JUL 1 9 1999

Sample Number: ***CC23211***

Sample Status: ***REPORT QUEUE***

gulated Haloacetic Acids	Method	State Code	MCL	Reporting Limit	Result	Unit	Analyst	Analysis Date
DIBROMOACETIC ACID	SM6251B			1.0	ND	ug/l	TS	07/13/99
DICHLOROACETIC ACID	SM6251B			1.0	20.8	ug/l	TS	07/13/99
MONOBROMOACETIC ACID	SM6251B			1.0	ND	ug/l	TS	07/13/99
MONOCHLOROACETIC ACID	SM6251B			2.0	4.1	ug/l	TS	07/13/99
TRICHLOROACETIC ACID	SM6251B			1.0	21.2	ug/l	TS	07/13/99
TOTAL HAA (5)			60		46.1			

Sample Number: ***CC23211***

Sample Status: ***REPORT QUEUE***

Unregulated Haloacetic Acids	Method	State Code	MCL	Reporting Limit	Result	Unit	Analyst	Analysis Date
BROMOCHLOROACETIC ACID	SM6251B			1.0	ND	ug/l	TS	07/13/99

Report Number: CC23211

See back of page for explanation of terms used.

RECEIVED JUL 20 1999

American Water Works Service Company, Inc.

Quality Control and Research Laboratory – 1115 South Illinois Street – Belleville, Illinois 62220-3102
Phone: (618)235-3600 - Fax: (618)235-6349

Disinfection By-Products (DBP) Analysis Report

VIRGINIA-AMERICAN WATER COMPANY
HOPEWELL DISTRICT
900 INDUSTRIAL STREET
PO BOX 60
HOPEWELL VA 23860-0060

Date of Report: 07/15/99
Certfification Number: 00001
PWS ID: 3670800
County:

Send Report to: J. HANCHAK
B. FRYE
E. LOWTHER
LAB DOCUMENT

Report Summary

Location:	IND	Collection Date:	06/23/99	Received Date:	06/24/99
Sample Type	EFF	CollectionTime:	14:20	Received Time:	10:00
Sampler:	B FRYE			Received Temp:	6

Disclosures:

Results are at or above the reporting limit for the following analytes:

1,1,1-TRICHLOROPROPANONE
CHLOROPICRIN
1,1-DICHLOROACETONITRILE
BROMOCHLOROACETONITRILE
1,1-DICHLOROPROPANONE
CHLORAL HYDRATE

No deviations from the method criteria were noted unless listed below.

Note: This report may not be reproduced, except in full, without written approval from American Water Works Service Co., Inc.
If you have any questions, concerning this report, please don't hesitate to call us at (618) 235-3600.

Reviewed By: Cindy S. Nettrour, QA/QC Officer

Finalized By: John T. Pivinski, Laboratory Director

Report Number: CC22902

See back of page for explanation of terms used.

Report Details

RECEIVED JUL 2 0 1999

Sample Number: ***CC22902***

Sample Status: ***REPORT QUEUE***

Halogenated DBP	Method	State Code	MCL	Reporting Limit	Result	Unit	Analyst	Analysis Date
BROMOCHLOROACETONITRILE	551			0.5	1.7	ug/l	LG	06/30/99
CHLOROPICRIN	551			0.5	1.0	ug/l	LG	06/30/99
DIBROMOACETONITRILE	551			0.5	ND	ug/l	LG	06/30/99
1,1-DICHLOROACETONITRILE	551			0.5	15.9	ug/l	LG	06/30/99
1,1-DICHLOROPROPANONE	551			0.5	4.2	ug/l	LG	06/30/99
TRICHLOROACETONITRILE	551			0.5	ND	ug/l	LG	06/30/99
1,1,1-TRICHLOROPROPANONE	551			0.5	7.1	ug/l	LG	06/30/99

Sample Number: ***CC22906***

Sample Status: ***REPORT QUEUE***

	Method	State Code	MCL	Reporting Limit	Result	Unit	Analyst	Analysis Date
CHLORAL HYDRATE	551			0.5	15.2	ug/l	LG	07/06/99

Report Number: CC22902

See back of page for explanation of terms used.

RECEIVED FEB 1 6 1999

Chemical Analysis Report
American Water Works Service Company, Inc.

Quality Control and Research Laboratory - 1115 South Illinois Street - Belleville, Illinois 62220-3102
(618)235-3600 - Fax: (618) 235-6349

VIRGINIA-AMERICAN WATER COMPANY
HOPEWELL DISTRICT
900 INDUSTRIAL STREET
PO BOX 60
HOPEWELL VA 23860-0060

Date of Report: 2/10/99
Certfification Number: 00001
PWS ID: 3670800
County:

Send Report to

J. HANCHAK
B. FRYE
E. LOWTHER
LAB DOCUMENT

Sample Information
Location: HRWTF
Sample Type DIST
Sampler: B FRYE

Collection Date: 1/26/99
CollectionTime: 8:55
* Hits: 3

Received Date: 1/27/99
Received Time: 11:00
*** Received Temp: 6

Report Number 01271701
Sample Number CC02620

Sample Status: REPORT QUEUE

Trihalomethanes	Method	State Code	MCL	Reporting Limit	Result	Unit	Analyst	Analysis Date
BROMOFORM	502.2			0.5	ND	ug/l	GA	1/29/99
BROMODICHLOROMETHANE	502.2			0.5	6.6	ug/l	GA	1/29/99
* CHLORODIBROMOMETHANE	502.2			0.5	0.8	ug/l	GA	1/29/99
* CHLOROFORM	502.2			0.5	51.5	ug/l	GA	1/29/99
Total THM			80		58.9			

Cindy S. Nettrour, Quality Control Manager
John T. Pivinski, Laboratory Director

ND = Not Detected Above Reporting Limit

RECEIVED FEB 1 6 1999

Chemical Analysis Report
American Water Works Service Company, Inc.

Quality Control and Research Laboratory - 1115 South Illinois Street - Belleville, Illinois 62220-3102
(618)235-3600 - Fax: (618) 235-6349

VIRGINIA-AMERICAN WATER COMPANY
HOPEWELL DISTRICT
900 INDUSTRIAL STREET
PO BOX 60
HOPEWELL VA 23860-0060

Date of Report: 2/10/99
Certfification Number: 00001
PWS ID: 3670800
County:

Send Report to

J. HANCHAK
B. FRYE
E. LOWTHER
LAB DOCUMENT

Sample Information

Location: HERCULES
Sample Type DIST
Sampler: B FRYE

Collection Date: 1/26/99
CollectionTime: 9:10
* Hits: 3

Received Date: 1/27/99
Received Time: 11:00
*** Received Temp: 6

Report Number 01271701
Sample Number CC02624

Sample Status: REPORT QUEUE

Trihalomethanes	Method	State Code	MCL	Reporting Limit	Result	Unit	Analyst	Analysis Date
BROMOFORM	502.2			0.5	ND	ug/l	GA	1/29/99
BROMODICHLOROMETHANE	502.2			0.5	5.6	ug/l	GA	1/29/99
CHLORODIBROMOMETHANE	502.2			0.5	0.7	ug/l	GA	1/29/99
* CHLOROFORM	502.2			0.5	48.3	ug/l	GA	1/29/99
Total THM			80		54.6			

Cindy S. Nettrour, Quality Control Manager
John T. Pivinski, Laboratory Director

ND = Not Detected Above Reporting Limit

RECEIVED FEB 16 1999

Chemical Analysis Report

American Water Works Service Company, Inc.

Quality Control and Research Laboratory - 1115 South Illinois Street - Belleville, Illinois 62220-3102
(618)235-3600 - Fax: (618) 235-6349

VIRGINIA-AMERICAN WATER COMPANY
HOPEWELL DISTRICT
900 INDUSTRIAL STREET
PO BOX 60
HOPEWELL VA 23860-0060

Date of Report: 2/10/99
Certification Number: 00001
PWS ID: 3670800
County:

Send Report to

J. HANCHAK
B. FRYE
E. LOWTHER
LAB DOCUMENT

Sample Information

Location: STONE
Sample Type DIST
Sampler: B FRYE

Collection Date: 1/26/99
CollectionTime: 10:10
* Hits: 3

Received Date: 1/27/99
Received Time: 11:00
*** Received Temp: 6

Report Number 01271701
Sample Number CC02618

Sample Status: REPORT QUEUE

Trihalomethanes	Method	State Code	MCL	Reporting Limit	Result	Unit	Analyst	Analysis Date
BROMOFORM	502.2			0.5	ND	ug/l	GA	1/29/99
BROMODICHLOROMETHANE	502.2			0.5	6.3	ug/l	GA	1/29/99
* CHLORODIBROMOMETHANE	502.2			0.5	0.8	ug/l	GA	1/29/99
* CHLOROFORM	502.2			0.5	50.3	ug/l	GA	1/29/99
Total THM			80		57.4			

Cindy S. Nettrour, Quality Control Manager
John T. Pivinski, Laboratory Director

ND = Not Detected Above Reporting Limit

RECEIVED FEB 1 6 1999

Chemical Analysis Report
American Water Works Service Company, Inc.

Quality Control and Research Laboratory - 1115 South Illinois Street - Belleville, Illinois 62220-3102
(618)235-3600 - Fax: (618) 235-6349

VIRGINIA-AMERICAN WATER COMPANY
HOPEWELL DISTRICT
900 INDUSTRIAL STREET
PO BOX 60
HOPEWELL VA 23860-0060

Date of Report: 2/10/99
Certification Number: 00001
PWS ID: 3670800
County:

Send Report to

J. HANCHAK
B. FRYE
E. LOWTHER
LAB DOCUMENT

Sample Information

Location: ALLIED
Sample Type DIST
Sampler: B FRYE

Collection Date: 1/26/99
CollectionTime: 9:05
* Hits: 3

Received Date: 1/27/99
Received Time: 11:00
*** Received Temp: 6

Report Number 01271701
Sample Number CC02622

Sample Status: REPORT QUEUE

Trihalomethanes	Method	State Code	MCL	Reporting Limit	Result	Unit	Analyst	Analysis Date
BROMOFORM	502.2			0.5	ND	ug/l	GA	1/29/99
BROMODICHLOROMETHANE	502.2			0.5	5.7	ug/l	GA	1/29/99
* CHLORODIBROMOMETHANE	502.2			0.5	0.6	ug/l	GA	1/29/99
* CHLOROFORM	502.2			0.5	47.8	ug/l	GA	1/29/99
Total THM			80		54.1			

Cindy S. Nettrour, Quality Control Manager
John T. Pivinski, Laboratory Director

ND = Not Detected Above Reporting Limit

NUCLEAR ENVIRONMENTAL LABORATORIES | P. O. BOX 11165 | LYNCHBURG, VIRGINIA 24506-1165

LEVEL 1 RADIOCHEMISTRY DATA REPORT

MULTIPLE SAMPLES OR MULTIPLE ANALYTES

Report Date: December 3, 1997	Report No.: 9710087R	NEL Contract No.: 431-2049-00	COC No.: 017502
Customer: Virginia American Water Co.		Customer Site: Hopewell VA	Customer SDG No.: NA
Customer Representative: Brenda Frye		Customer Authorization No.: PO#HPBF00622	
Sample Description: Water Samples			
No. of Samples: 2	Sample Receipt Date: October 30, 1997	Reference Date: October 29, 1997	

Customer's Sample ID	NEL's Sample No.	Analytical Method	Analyte	Results	1 Sigma Uncertainty	MDA	Units
Domestic - New Plant	9710087-01	TP-316	Gross Alpha	-0.83	0.38	1.33	pCi/L
		TP-316	Gross Beta (R)	4.55	0.28	0.81	pCi/L
Industrial - Old Plant	9710087-02	TP-316	Gross Alpha	-0.86	0.32	1.13	pCi/L
		TP-316	Gross Beta (R)	5.85	0.29	0.80	pCi/L

Gross Alpha MDA's are best achievable.
(R) Revised results.

Data Reviewed By:	Date:	12-3-97
Data Approved By:	Date:	12-3-97

BetzDearborn

BETZDEARBORN MATERIAL SAFETY DATA SHEET

EFFECTIVE DATE: 28-APR-1997
PRINTED DATE: 16-DEC-1997

1) CHEMICAL PRODUCT AND COMPANY IDENTIFICATION

PRODUCT NAME : CONTINUUM AT3206

PRODUCT APPLICATION AREA: WATER-BASED CORROSION INHIBITOR/DEPOSIT CONTROL AGENT.

COMPANY ADDRESS:
BetzDearborn Inc., Water Management Group
200 Witmer Road, Horsham, PA 19044
Information phone number (215) - 773-6131

EMERGENCY TELEPHONE (HEALTH/ACCIDENT): (800)-877-1940 (USA)

2) COMPOSITION / INFORMATION ON INGREDIENTS

Information for specific product ingredients as required by the U.S. OSHA HAZARD COMMUNICATION STANDARD is listed. Refer to additional sections of this MSDS for our assessment of the potential hazards of this formulation.

HAZARDOUS INGREDIENTS:

CAS#	CHEMICAL NAME
2809-21-4	PHOSPHONIC ACID,(1-HYDROXYETHYLIDINE)BIS- (HEDP) Corrosive (eyes)
1310-73-2	SODIUM HYDROXIDE (CAUSTIC SODA) Corrosive; toxic (by ingestion)
29385-43-1	1-H-BENZOTRIAZOLE,METHYL- (TOLYLTRIAZOLE: TTA) Solid is an irritant (by all routes); liquid is corrosive

No component is considered to be a carcinogen by the National Toxicology Program, the International Agency for Research on Cancer, or the Occupational Safety and Health Administration at OSHA thresholds for carcinogens.

CONTINUED

3) HAZARDS IDENTIFICATION

****

EMERGENCY OVERVIEW

DANGER

May cause moderate irritation to the skin. Corrosive to the eyes.
Mists/aerosols cause irritation to the upper respiratory tract.

DOT hazard: Corrosive to aluminum, RQ
Emergency Response Guide #154
Odor: Mild; Appearance: Yellow, Liquid

Fire fighters should wear positive pressure self-contained breathing apparatus(full face-piece type). Proper fire-extinguishing media: dry chemical, carbon dioxide, foam or water

****

POTENTIAL HEALTH EFFECTS

ACUTE SKIN EFFECTS:
Primary route of exposure; May cause moderate irritation to the skin.

ACUTE EYE EFFECTS:
Corrosive to the eyes.

ACUTE RESPIRATORY EFFECTS:
Mists/aerosols cause irritation to the upper respiratory tract.

INGESTION EFFECTS:
May cause gastrointestinal irritation with possible nausea, vomiting, abdominal discomfort and diarrhea.

TARGET ORGANS:
Prolonged or repeated exposures may cause primary irritant dermatitis.

MEDICAL CONDITIONS AGGRAVATED:
Not known.

SYMPTOMS OF EXPOSURE:
May cause redness or itching of skin.

CONTINUED

4) FIRST AID MEASURES

SKIN CONTACT:
Remove contaminated clothing. Wash exposed area with a large quantity of soap solution or water for 15 minutes.

EYE CONTACT:
Immediately flush eyes with water for 15 minutes. Immediately contact a physician for additional treatment.

INHALATION:
Remove victim from contaminated area to fresh air. Apply appropriate first aid treatment as necessary.

INGESTION:
Do not feed anything by mouth to an unconscious or convulsive victim. Do not induce vomiting. Immediately contact physician. Dilute contents of stomach using 3-4 glasses milk or water.

5) FIRE FIGHTING MEASURES

FIRE FIGHTING INSTRUCTIONS:
Fire fighters should wear positive pressure self-contained breathing apparatus (full face-piece type).

EXTINGUISHING MEDIA:
dry chemical, carbon dioxide, foam or water

HAZARDOUS DECOMPOSITION PRODUCTS:
Thermal decomposition (destructive fires) yields elemental oxides.

FLASH POINT:
> 200F P-M(CC)

MISCELLANEOUS:
Corrosive to aluminum, RQ
UN3266;Emergency Response Guide #154

6) ACCIDENTAL RELEASE MEASURES

PROTECTION AND SPILL CONTAINMENT:
Ventilate area. Use specified protective equipment. Contain and absorb on absorbent material. Place in waste disposal container. Flush area with water. Wet area may be slippery. Spread sand/grit.

DISPOSAL INSTRUCTIONS:
Water contaminated with this product may be sent to a sanitary sewer treatment facility,in accordance with any local agreement,a permitted waste treatment facility or discharged under a permit. Product as is - Incinerate or land dispose in an approved landfill.

7) HANDLING AND STORAGE

HANDLING:
Alkaline. Corrosive(Eyes). Do not mix with acidic material.

STORAGE:
Keep containers closed when not in use. Do not freeze. If frozen, thaw and mix completely prior to use.

CONTINUED

8) EXPOSURE CONTROLS/PERSONAL PROTECTION

EXPOSURE LIMITS

CHEMICAL NAME

PHOSPHONIC ACID,(1-HYDROXYETHYLIDINE)BIS- (HEDP)
PEL (OSHA): NOT DETERMINED
TLV (ACGIH): NOT DETERMINED

SODIUM HYDROXIDE (CAUSTIC SODA)
PEL (OSHA): 2 MG/M3
TLV (ACGIH): 2 MG/M3(CEILING)

1-H-BENZOTRIAZOLE,METHYL- (TOLYLTRIAZOLE; TTA)
PEL (OSHA): NOT DETERMINED
TLV (ACGIH): NOT DETERMINED

ENGINEERING CONTROLS:
Adequate ventilation to maintain air contaminants below exposure limits.

PERSONAL PROTECTIVE EQUIPMENT:
Use protective equipment in accordance with 29CFR 1910 Subpart I

RESPIRATORY PROTECTION:
A RESPIRATORY PROTECTION PROGRAM THAT MEETS OSHA'S 29 CFR 1910.134 AND ANSI Z88.2 REQUIREMENTS MUST BE FOLLOWED WHENEVER WORKPLACE CONDITIONS WARRANT A RESPIRATOR'S USE.
USE AIR PURIFYING RESPIRATORS WITHIN USE LIMITATIONS ASSOCIATED WITH THE EQUIPMENT OR ELSE USE SUPPLIED AIR-RESPIRATORS.
If air-purifying respirator use is appropriate, use a respirator with dust/mist filters.

SKIN PROTECTION:
rubber gloves-- Wash off after each use. Replace as necessary.

EYE PROTECTION:
splash proof chemical goggles

9) PHYSICAL AND CHEMICAL PROPERTIES

Specific Grav. (70F)	1.202	Vapor Pressure (mmHG)	~ 18.0
Freeze Point (F)	14.00	Vapor Density (air=1)	< 1.00
Viscosity (cps 70F)	36	% Solubility (water)	100.0

Odor	Mild	
Appearance	Yellow	
Physical State	Liquid	
Flash Point (F)	> 200	P-M(CC)
pH As Is (approx.)	13.1	
Evaporation Rate (Ether=1)	< 1.00	

N = not applicable ND = not determined

CONTINUED

10) STABILITY AND REACTIVITY

STABILITY:
Stable under normal storage conditions.
HAZARDOUS POLYMERIZATION:
Will not occur.
INCOMPATIBILITIES:
May react with strong oxidizers.
DECOMPOSITION PRODUCTS:
Thermal decomposition (destructive fires) yields elemental oxides.
BETZ INTERNAL PUMPOUT/CLEANOUT CATEGORIES:
"B"

11) TOXICOLOGICAL INFORMATION

Oral LD50 RAT:	2,300 mg/kg
NOTE - Estimated value	
Dermal LD50 RABBIT:	>5,000 mg/kg
NOTE - Estimated value	

12) ECOLOGICAL INFORMATION

AQUATIC TOXICOLOGY
No Data Available.

BIODEGRADATION

COD (mg/gm):	201 Calculated
TOC (mg/gm):	66 Calculated
BOD-5 (mg/gm):	0 Calculated
BOD-28 (mg/gm):	2 Calculated

13) DISPOSAL CONSIDERATIONS

If this undiluted product is discarded as a waste, the US RCRA hazardous waste identification number is :
D002 = Corrosive(pH).

Please be advised; however, that state and local requirements for waste disposal may be more restrictive or otherwise different from federal regulations. Consult state and local regulations regarding the proper disposal of this material.

14) TRANSPORT INFORMATION

DOT HAZARD:	Corrosive to aluminum, RQ
UN / NA NUMBER:	UN3266
DOT EMERGENCY RESPONSE GUIDE #:	154

CONTINUED

15) REGULATORY INFORMATION

TSCA:
All components of this product are listed in the TSCA inventory.
CERCLA AND/OR SARA REPORTABLE QUANTITY (RQ):
1,998 gallons due to SODIUM HYDROXIDE (CAUSTIC SODA);
SARA SECTION 312 HAZARD CLASS:
Immediate(acute);Delayed(Chronic)
SARA SECTION 302 CHEMICALS:
No regulated constituent present at OSHA thresholds
SARA SECTION 313 CHEMICALS:
No regulated constituent present at OSHA thresholds

CALIFORNIA REGULATORY INFORMATION

CALIFORNIA SAFE DRINKING WATER AND TOXIC ENFORCEMENT ACT (PROPOSITION 65) CHEMICALS PRESENT:

No regulated constituent present at OSHA thresholds

MICHIGAN REGULATORY INFORMATION

No regulated constituent present at OSHA thresholds

16) OTHER INFORMATION

NFPA/HMIS		CODE TRANSLATION
Health	3	Serious Hazard
Fire	1	Slight Hazard
Reactivity	0	Minimal Hazard
Special	ALK	pH above 12.0
(1) Protective Equipment	B	Goggles,Gloves

(1) refer to section 8 of MSDS for additional protective equipment recommendations.

CHANGE LOG

	EFFECTIVE DATE	REVISIONS TO SECTION:	SUPERCEDES
MSDS status:	29-JAN-1997		** NEW **
	28-APR-1997	3,5,14	29-JAN-1997

MATERIAL SAFETY DATA SHEET

12/9/98

SECTION I - IDENTIFICATION

TRADE NAME:	BLEACH
CHEMICAL NAME:	Sodium Hypochlorite
FORMULA:	NaOCl
DOT SHIPPING NAME:	Hypochlorite Solution
DOT HAZARD CLASS:	8
UN/NA NUMBER:	UN 1791
DOT LABEL:	Corrosive
DOT PLACARD:	Corrosive
PACKING GROUP:	III
REPORTABLE QUANTITY:	Sodium Hypochlorite: 100 Pounds/45.4 Kilograms
CAS NUMBER:	7681-52-9
NFPA DESIGNATION:	The NFPA has not rated sodium hypochlorite.

SECTION II - HAZARDOUS INGREDIENTS

MATERIAL	% BY WEIGHT	CAS NO.	OSHA PEL	ACGIH TLV
Sodium Hypochlorite	12.5-15.6	7681-52-9	Not Applicable	Not Applicable
Sodium Hydroxide	0.1-2.0	1310-73-2	2mg/m^3 ceiling	STEL/CEIL(c) 2mg/m^3 ceiling
Inert Ingredients	Balance	Not Applicable	Not Applicable	Not Applicable

CARCINOGENICITY STATUS: NTP - No, IARC - No, OSHA - No.

SECTION III - PHYSICAL DATA

APPEARANCE:	Yellow-green liquid
BOILING POINT:	219°F (104°C) for 12.5% NaOCl by wt.
FREEZING POINT:	- 11°F (- 24°C) for 12.5% NaOCl by wt.
ODOR:	Chlorine
pH:	12.5 - 13.5 s.u. @ 25°C
VISCOSITY (Cs):	2.15 @ 23°C for 12.5% NaOCl by wt.
% VOLATILE BY VOLUME:	Variable water plus products of decomposition
SOLUBILITY IN WATER:	Complete
SPECIFIC GRAVITY (Water=1):	1.218 @ 20°C for 13.79 % NaOCl by wt.
VAPOR DENSITY (AIR=1):	Not available
VAPOR PRESSURE (mm Hg):	Variable water plus products of decomposition .

Industrial Chemicals, Inc.
2540 Bellwood Road • Richmond, VA 23237
Richmond (804) 275-9292 Norfolk (804) 624-5369
Fax (804) 275-6366

SECTION IV - FIRE AND EXPLOSION DATA

FLASH POINT (Test method): Not applicable
AUTO IGNITION TEMPERATURE: Not applicable
FLAMMABLE LIMITS IN AIR (Volume %): Not applicable
EXTINGUISHING MEDIA: Flood with water or carbon dioxide (CO_2)
SPECIAL FIRE FIGHTING PROCEDURES: Use National Institute of Occupational Safety & Health (NIOSH) approved respirator with acid type canister or use self-contained breathing apparatus.
Unusual fire and explosion hazards: material is a strong oxidizer. Contact with combustibles may initiate or promote combustion. Acid and heat accelerate decomposition. Decomposition products may include chlorine.

SECTION V - HEALTH HAZARD INFORMATION

MEDICAL CONDITIONS AGGRAVATED BY EXPOSURE

No medical conditions are known to be aggravated by exposure.

ROUTES OF EXPOSURE

- INHALATION: Fumes from spills can cause severe irritation and chemical burns to the nose, throat, and lungs. Very little hazard from properly stored solution.
- SKIN CONTACT: Severe irritant, reddening of skin, can cause chemical burns to skin.
- SKIN ABSORPTION: Same as skin contact.
- EYE CONTACT: Severe irritant, corrosive, can severely burn eyes.
- INGESTION: Causes irritation of membranes of the mouth, throat, and stomach pain and possible ulceration. LD50 (oral, rat) for 12.5% NaOCl is approximately 5 g/kg body weight.

EFFECTS OF OVEREXPOSURE

ACUTE OVEREXPOSURE (see Routes of Exposure above)

- SWALLOWING: See "ingestion" under routes of exposure.
- SKIN CONTACT: severe Irritant, reddening of skin, skin damage, chemical burns.
- INHALATION: Fumes from spills are very irritating to mucous membranes.
- EYE CONTACT: Extreme irritant, corrosive.

CHRONIC OVEREXPOSURE (see Routes of Exposure above)

- EYE: Can cause damage.
- SKIN: Can cause damage, chemical burns.

EMERGENCY AND FIRST AID PROCEDURES

IF CONTACT WITH EYES OCCURS: flush with water for at least fifteen (15) minutes. Get medical attention. IF CONTACT WITH SKIN OCCURS: wash with plenty of soap and water. INHALATION: Remove to fresh air. Call a physician if exposure is severe. IF SWALLOWED: drink large amounts of water. Do NOT induce vomiting. Call a physician or poison control center immediately.

SECTION VI - REACTIVITY DATA

CONDITIONS CONTRIBUTING TO INSTABILITY

Solutions are fairly stable in concentrations below 10%. Stability decreases with concentration, heat, light, exposure, decrease in pH, and contamination with heavy metals, such as nickel, cobalt, copper, and iron.

INCOMPATIBILITY

Acids, alcohols, amines, ammonia, chlorinated isocyanurates, combustibles, cyanides, detergents, ethers, hydrocarbons, oxidizable materials, reducing agents. Corrosive to most metals.

DECOMPOSITION PRODUCTS

Hypochlorous Acid (HOCl), chlorine, hydrochloric acid. Composition depends upon temperature and decrease in pH. Additional decomposition products, which depend upon pH, temperature and time, are sodium chloride, sodium chlorate and oxygen.

CONDITIONS CONTRIBUTING TO HAZARDOUS POLYMERIZATION

Will not occur.

SECTION VII - SPILL OR LEAK PROCEDURES

IN THE EVENT OF A TRANSPORTATION EMERGENCY, CALL CHEMTREC: (800) 424-9300

STEPS TO BE TAKEN IF MATERIAL IS RELEASED OR SPILLED

Cleanup personnel must wear proper protective equipment (See Section VIII). Contain in diked area. Neutralize with sodium bisulfite or ferrous salt solutions. Place neutralized material in DOT specification approved container(s). Flush area with large amounts of water. Comply with all Federal, State and Local reporting requirements.

WASTE DISPOSAL

Contact Federal, State, County, and Local environmental regulators for guidance regarding proper disposal.

SECTION VIII - SPECIAL PROTECTION INFORMATION

VENTILATION REQUIREMENTS: Local exhaust is recommended.

SPECIFIC PERSONAL PROTECTIVE EQUIPMENT

- RESPIRATORY: Use National Institute of Occupational Safety and Health (NIOSH) or Mine Safety and Health Administration (MSHA) approved respirator appropriate for this product when permissible exposure limits are exceeded.
- EYES: Use chemical goggles and face shield.
- GLOVES: Use chemical resistant rubber, plastic, or neoprene gloves.
- OTHER: Use chemical resistant splash apron and boots. Safety shower and eye wash fountain should be located nearby.

SECTION IX - SPECIAL PRECAUTIONS

PRECAUTIONS TO BE TAKEN IN HANDLING

DANGER: This product is corrosive and may cause severe skin irritation or chemical burns to broken skin. Causes eye damage. Do not get in eyes, on skin or on clothing. Wear goggles and face shield and chemical resistant gloves when handling this product. Wash after handling. Avoid breathing vapors. Vacate poorly ventilated areas as soon as possible. Do not return until odors have dissipated.

PROPER STORAGE AND DISPOSAL REQUIREMENTS

Store this product in a cool, dry area away from direct sunlight and heat to avoid deterioration. In case of spill, flood areas with large quantities of water.

Disposal for domestic use: Do not reuse container. Rinse thoroughly before discarding in trash. Disposal for all other uses: Triple rinse (or equivalent). Then offer for recycling or reconditioning, or puncture and dispose of in a sanitary landfill, or incineration, or, if allowed by state and local authorities, by burning. If burned, stay out of smoke.

Do not contaminate water, food, or feed by storage, disposal or cleaning of equipment.

STORE IN AN UPRIGHT POSITION

OTHER PRECAUTIONS

STRONG OXIDIZING AGENT: Mix only with water according to label directions. Mixing this product with gross filth such as feces, urine, etc., or with ammonia, acids, detergents or other chemicals may release hazardous gases irritating to eyes, lungs and mucous membranes.

ADDITIONAL REGULATORY CONCERNS

- EPA: May not be used for disinfection or sanitization without prior approval by EPA. Repackagers must obtain EPA registration and establishment numbers.
- FIFRA: This product is regulated under the Federal Insecticide, Fungicide, and Rodenticide Act (FIFRA) if used as a disinfectant or sanitizer.
- TSCA: Included in the Toxic Substances Control Act (TSCA) Inventory Of Chemical Substances.

MSDS PREPARED BY: Jones Chemicals, Inc.
100 Sunny Sol Blvd.
Caledonia, NY 14423
Phone: 716-538-2314

ISSUE DATE: 12/09/98
SUPERSEDES ISSUE DATED: 12/05/94

The information herein is given in good faith but no warranty, expressed or implied is made.

BetzDearborn

ZDEARBORN MATERIAL
SAFETY DATA SHEET

EFFECTIVE DATE: 29-NOV-1995
PRINTED DATE: 1-AUG-1998

1) CHEMICAL PRODUCT AND COMPANY IDENTIFICATION

PRODUCT NAME : FOAM-TROL CT

PRODUCT APPLICATION AREA: ANTIFOAM.

COMPANY ADDRESS:
BetzDearborn Inc., Water Management Group
200 Witmer Road, Horsham, PA 19044
Information phone number (215) - 773-6131

EMERGENCY TELEPHONE (HEALTH/ACCIDENT): (800)-877-1940 (USA)

2) COMPOSITION / INFORMATION ON INGREDIENTS

Information for specific product ingredients as required by the U.S. OSHA HAZARD COMMUNICATION STANDARD is listed. Refer to additional sections of this MSDS for our assessment of the potential hazards of this formulation.

HAZARDOUS INGREDIENTS:

CAS#	CHEMICAL NAME
64742-30-9	MINERAL OIL (MILDLY SOLVENT-REFINED OR HYDROTREATED OILS) Human carcinogen (IARC-1; NTP-known; chronic animal skin painting studies caused tumors)

CONTINUED

3) HAZARDS IDENTIFICATION

****

EMERGENCY OVERVIEW

CAUTION

May cause slight irritation to the skin. May cause dermatitis. May cause slight irritation to the eyes. Vapors, gases, mists and/or aerosols may cause irritation to upper respiratory tract.

DOT hazard is not applicable
Emergency Response Guide is not applicable
Odor: Mild; Appearance: Off-White To Amber, Liquid

Fire fighters should wear positive pressure self-contained breathing apparatus(full face-piece type). Proper fire-extinguishing media: dry chemical/CO2/foam or water--Slippery condition; use sand/grit.

****

POTENTIAL HEALTH EFFECTS

ACUTE SKIN EFFECTS:
Primary route of exposure; May cause slight irritation to the skin. May cause dermatitis.

ACUTE EYE EFFECTS:
May cause slight irritation to the eyes.

ACUTE RESPIRATORY EFFECTS:
Vapors, gases, mists and/or aerosols may cause irritation to upper respiratory tract.

INGESTION EFFECTS:
May cause slight gastrointestinal irritation. Small amounts aspirated during ingestion or vomiting may cause lung injury, possibly leading to death.

TARGET ORGANS:
Prolonged or repeated exposures may cause defatting-type dermatitis. Lifetime skin painting studies in mice have produced skin tumors.

MEDICAL CONDITIONS AGGRAVATED:
Not known.

SYMPTOMS OF EXPOSURE:
Prolonged exposure may cause drying and cracking of skin.

CONTINUED

4) FIRST AID MEASURES

SKIN CONTACT:
Remove contaminated clothing. Wash exposed area with a large quantity of soap solution or water for 15 minutes.

EYE CONTACT:
Immediately flush eyes with water for 15 minutes. Immediately contact a physician for additional treatment.

INHALATION:
Remove victim from contaminated area to fresh air. Apply appropriate first aid treatment as necessary.

INGESTION:
Do not feed anything by mouth to an unconscious or convulsive victim. Do not induce vomiting. Immediately contact physician. Dilute contents of stomach using 3-4 glasses milk or water.

5) FIRE FIGHTING MEASURES

FIRE FIGHTING INSTRUCTIONS:
Fire fighters should wear positive pressure self-contained breathing apparatus (full face-piece type).

EXTINGUISHING MEDIA:
dry chemical/CO2/foam or water--Slippery condition; use sand/grit.

HAZARDOUS DECOMPOSITION PRODUCTS:
Thermal decomposition (destructive fires) yields elemental oxides.

FLASH POINT:
> 200F SETA(CC)

6) ACCIDENTAL RELEASE MEASURES

PROTECTION AND SPILL CONTAINMENT:
Ventilate area. Use specified protective equipment. Contain and absorb on absorbent material. Place in waste disposal container. Flush area with water. Wet area may be slippery. Spread sand/grit.

DISPOSAL INSTRUCTIONS:
Water contaminated with this product may be sent to a sanitary sewer treatment facility,in accordance with any local agreement,a permitted waste treatment facility or discharged under a permit. Product as is - Incinerate or land dispose in an approved landfill.

7) HANDLING AND STORAGE

HANDLING:
Normal chemical handling.

STORAGE:
Keep containers closed when not in use. Store between 90-110F to prevent crystallization. If storage is below 90F, warm and mix prior to use to ensure homogeneity. Store away from oxidizers.

CONTINUED

8) EXPOSURE CONTROLS/PERSONAL PROTECTION

EXPOSURE LIMITS

CHEMICAL NAME

MINERAL OIL (MILDLY SOLVENT-REFINED OR HYDROTREATED OILS)
PEL (OSHA): 5 MG/M3
TLV (ACGIH): 5 MG/M3

ENGINEERING CONTROLS:
Adequate ventilation to maintain air contaminants below exposure limits.

PERSONAL PROTECTIVE EQUIPMENT:
Use protective equipment in accordance with 29CFR 1910 Subpart I

RESPIRATORY PROTECTION:
A RESPIRATORY PROTECTION PROGRAM THAT MEETS OSHA'S 29 CFR 1910.134 AND ANSI Z88.2 REQUIREMENTS MUST BE FOLLOWED WHENEVER WORKPLACE CONDITIONS WARRANT A RESPIRATOR'S USE.
USE AIR PURIFYING RESPIRATORS WITHIN USE LIMITATIONS ASSOCIATED WITH THE EQUIPMENT OR ELSE USE SUPPLIED AIR-RESPIRATORS.
If air-purifying respirator use is appropriate, use a respirator with organic vapor cartridges.

SKIN PROTECTION:
neoprene gloves-- Wash off after each use. Replace as necessary.

EYE PROTECTION:
splash proof chemical goggles

9) PHYSICAL AND CHEMICAL PROPERTIES

Specific Grav. (70F)	0.850	Vapor Pressure (mmHG)	< 10.0
Freeze Point (F)	ND	Vapor Density (air-1)	> 1.00
Viscosity (cps 70F)	30	% Solubility (water)	0.0

Odor	Mild
Appearance	Off-White To Amber
Physical State	Liquid
Flash Point (F)	> 200 SETA(CC)
pH 50% Sol. (approx.)	6.8
Evaporation Rate (Ether-1)	< 1.00

NA = not applicable ND = not determined

CONTINUED

10) STABILITY AND REACTIVITY

STABILITY:
Stable under normal storage conditions.
HAZARDOUS POLYMERIZATION:
Will not occur.
INCOMPATIBILITIES:
May react with strong oxidizers.
DECOMPOSITION PRODUCTS:
Thermal decomposition (destructive fires) yields elemental oxides.
BETZ INTERNAL PUMPOUT/CLEANOUT CATEGORIES:
"B"

11) TOXICOLOGICAL INFORMATION

Oral LD50 RAT:	>5,000 mg/kg
NOTE - Estimated value	
Dermal LD50 RABBIT:	>3,000 mg/kg
NOTE - Estimated value	
Eye Irritation Score RABBIT:	3.3

NOTE - According to OECD Protocol #405; completely reversible by 24 hours

CONTINUED

12) ECOLOGICAL INFORMATION

AQUATIC TOXICOLOGY

Bluegill Sunfish 48 Hour Static Screen

0% Mortality: 1000 mg/L

Daphnia magna 48 Hour Static Acute Bioassay
Low water solubility resulted in precipitation. The properties of this product caused physical stress to the organisms in the lowest concentration tested.

LC50: 1030 mg/L
0% Mortality: 232 mg/L

Fathead Minnow 96 Hour Static Acute Bioassay
Low water solubility resulted in precipitation. Mortality was observed in lowest concentration tested.

LC50: 665 mg/L
15% Mortality: 232 mg/L

Rainbow Trout 96 Hour Static Acute Bioassay
Low water solubility resulted in precipitation.

LC50: 405 mg/L
No Effect Level: 230 mg/L

BIODEGRADATION

COD (mg/gm):	764 Calculated
TOC (mg/gm):	540 Calculated
BOD-5 (mg/gm):	110 Calculated
BOD-28 (mg/gm):	243 Calculated

13) DISPOSAL CONSIDERATIONS

If this undiluted product is discarded as a waste, the US RCRA hazardous waste identification number is :
Not applicable.

Please be advised; however, that state and local requirements for waste disposal may be more restrictive or otherwise different from federal regulations. Consult state and local regulations regarding the proper disposal of this material.

14) TRANSPORT INFORMATION

DOT HAZARD:	Not Applicable
UN / NA NUMBER:	Not applicable
DOT EMERGENCY RESPONSE GUIDE #:	Not applicable

CONTINUED

15) REGULATORY INFORMATION

TSCA:
All components of this product are listed in the TSCA inventory.
CERCLA AND/OR SARA REPORTABLE QUANTITY (RQ):
Treat as oil spill
SARA SECTION 312 HAZARD CLASS:
Immediate(acute);Delayed(Chronic)
SARA SECTION 302 CHEMICALS:
No regulated constituent present at OSHA thresholds
SARA SECTION 313 CHEMICALS:
No regulated constituent present at OSHA thresholds

CALIFORNIA REGULATORY INFORMATION

CALIFORNIA SAFE DRINKING WATER AND TOXIC ENFORCEMENT ACT (PROPOSITION 65) CHEMICALS PRESENT:
This product contains these chemicals known to the state of California to cause cancer or reproductive toxicity:

CAS#	CHEMICAL NAME
64742-30-9	MINERAL OIL (MILDLY SOLVENT-REFINED OR HYDROTREATED OILS)

HIGAN REGULATORY INFORMATION

No regulated constituent present at OSHA thresholds

16) OTHER INFORMATION

NFPA/HMIS

		CODE TRANSLATION
Health	1	Slight Hazard
Fire	1	Slight Hazard
Reactivity	0	Minimal Hazard
Special	NONE	No special Hazard
(1) Protective Equipment	B	Goggles,Gloves

(1) refer to section 8 of MSDS for additional protective equipment recommendations.

CHANGE LOG

	EFFECTIVE DATE	REVISIONS TO SECTION:	SUPERCEDES
MSDS status:	22-AUG-1995	REVISED FORMAT	** NEW **
	29-NOV-1995	3	22-AUG-1995

DuPont Chemicals

4950CR

Revised 8-MAY-1998

Printed 5-JUN-1998

Sulfuric Acid, 77 to 100%

CHEMICAL PRODUCT/COMPANY IDENTIFICATION

Material Identification

Corporate MSDS Number	DU000051
CAS Number	7664-93-9
Formula	H2SO4
Molecular Weight	98.08
CAS Name	SULFURIC ACID
Grade	77 to 100% TECHNICAL

Tradenames and Synonyms

CC0036

Company Identification

MANUFACTURER/DISTRIBUTOR

DuPont
1007 Market Street
Wilmington, DE 19898

PHONE NUMBERS

Product Information	1-800-441-7515
Transport Emergency	CHEMTREC: 1-800-424-9300
Medical Emergency	1-800-441-3637

COMPOSITION/INFORMATION ON INGREDIENTS

Components

Material	CAS Number	%
SULFURIC ACID	7664-93-9	
60 DEG TECHNICAL		77.7
66 DEG TECHNICAL		93.2

(Continued)

COMPOSITION/INFORMATION ON INGREDIENTS (Continued)

1.835 ELECTROLYTE		93.2
98% TECHNICAL		98
99% TECHNICAL		99
100% TECHNICAL		100
WATER	7732-18-5	0-22

HAZARDS IDENTIFICATION

Potential Health Effects

INHALATION

Exposure to mists may cause: Irritation of the nose and throat with sneezing, sore throat or runny nose. Non-specific effects such as headache, nausea and weakness. Gross overexposure may cause: Irritation of nose, throat, and lungs with cough, difficulty breathing or shortness of breath. Pulmonary edema (body fluid in the lungs) with cough, wheezing, abnormal lung sounds, possibly progressing to severe shortness of breath and bluish discoloration of the skin; symptoms may be delayed. Repeated and/or prolonged exposure to mists may cause: Corrosion of teeth.

SKIN CONTACT

Contact with liquid may cause: Skin corrosion, burns or ulcers. Contact with a 1 % solution may cause-- Slight irritation with itching, redness or swelling. Repeated and/or prolonged exposure to mists may cause: Irritation with itching, burning, redness, swelling or rash.

EYE CONTACT

Contact with liquid may cause: Eye corrosion or ulceration - blindness may result. Repeated and/or prolonged exposure to mists may cause: Eye irritation with tearing, pain or blurred vision.

INGESTION

Immediate effects of overexposure may include: Burns of the mouth, throat, esophagus and stomach, with severe pain, bleeding, vomiting, diarrhea and collapse of blood pressure - damage may appear days after exposure.

ADDITIONAL HEALTH EFFECTS

The International Agency for Research on Cancer (IARC) classified "strong inorganic acid mists containing sulfuric acid" as a Category 1 carcinogen, a substance that is "carcinogenic to humans". This classification is for strong inorganic acid mists only and does not apply to sulfuric acid or sulfuric acid solutions. The basis for the IARC classification rests on several

(Continued)

HAZARDS IDENTIFICATION (Continued)

epidemiology studies which have several deficiencies. These studies did not account for exposure to other substances, some known to be animal or potential human carcinogens, social influences (smoking, etc.) and included small numbers of subjects. Based on the overall weight of evidence from all human and chronic animal studies, no definitive causal relationship between sulfuric acid mist exposure and respiratory tract tumors has been shown.

Increased susceptibility to the effects of this material may be observed in persons with pre-existing disease of the: lungs.

Carcinogenicity Information

None of the components present in this material at concentrations equal to or greater than 0.1% are listed by IARC, NTP, OSHA or ACGIH as a carcinogen.

FIRST AID MEASURES

First Aid

INHALATION

If inhaled, immediately remove to fresh air. If not breathing, give artificial respiration. If breathing is difficult, give oxygen. Please note: Symptoms may be delayed; prompt medical attention may be required. Call a physician.

SKIN CONTACT

In case of contact, immediately flush skin with plenty of water for at least 15 minutes, while removing contaminated clothing and shoes. Call a physician. Wash contaminated clothing before reuse.

While the patient is being transported to a medical facility, continue the application of cold, wet compresses. If medical treatment must be delayed, repeat the flushing with cold water or soak the affected area with cold water to help remove the last traces of sulfuric acid. Creams or ointments should not be applied before or during the washing phase of treatment.

EYE CONTACT

In case of contact, immediately flush eyes with plenty of water for at least 15 minutes. Call a physician.

INGESTION

If swallowed, do not induce vomiting. Give large quantity of water. Call a physician immediately. Never give anything by mouth to an unconscious person.

Notes to Physicians

Continued washing of the affected area with cold or iced water will be helpful in removing the last traces of sulfuric acid. Creams or ointments should not be applied before or during the washing phase of the treatment.

(Continued)

FIRE FIGHTING MEASURES

Flammable Properties

Will not burn.

Fire and Explosion Hazards:

Reacts with most metals, especially when dilute, to give flammable, potentially explosive hydrogen gas. Follow appropriate National Fire Protection Association (NFPA) codes.

Extinguishing Media

Use media appropriate for surrounding material.

Use water spray to cool containers exposed to fire; do not get water inside containers.

Fire Fighting Instructions

Evacuate personnel to a safe area. Keep personnel removed and upwind of fire. Generates heat upon addition of water, with possible spattering. Wear full protective clothing. Runoff from fire control may cause pollution. Neutralize run-off with lime, soda ash, etc., to prevent corrosion of metals and formation of hydrogen gas. Wear self-contained breathing apparatus if fumes or mists are present.

ACCIDENTAL RELEASE MEASURES

Safeguards (Personnel)

NOTE: Review FIRE FIGHTING MEASURES and HANDLING (PERSONNEL) sections before proceeding with clean-up. Use appropriate PERSONAL PROTECTIVE EQUIPMENT during clean-up.

Accidental Release Measures

Stop flow if possible. Review "Fire and Explosion Hazards" and "Safety Precautions" before proceeding with clean up. Use appropriate protective equipment during clean up. Soak up small spills with dry sand, clay or diatomaceous earth. Dike large spills, and cautiously dilute and neutralize with lime or soda ash, and transfer to waste water treatment system. Prevent liquid from entering sewers, waterways, or low areas.

If this product is spilled and not recovered, or is recovered as a waste for treatment or disposal, the Reportable Quantity is 1,000 lbs. (based on the sulfuric acid content of the solution spilled). Comply with Federal, State, and local regulations on reporting releases.

DuPont Emergency Exposure Limits (EEL) are established to facilitate site or plant emergency evacuation and specify airborne concentrations of brief durations which should not result in permanent adverse health effects or interfere with escape. EEL's are expressed as airborne concentration

(Continued)

ACCIDENTAL RELEASE MEASURES (Continued)

multiplied by time (CxT) for up to a maximum of 60 minutes and as a ceiling airborne concentration. These limits are used in conjunction with engineering controls/monitoring and as an aid in planning for episodic releases and spills. For more information on the applicability of EEL's, contact DuPont.

The DuPont Emergency Exposure Limit (EEL) for Sulfuric Acid is 10 mg/m3 for 15 to 60 minutes and 20 mg/m3 for up to 15 minutes with a not-to-exceed ceiling of 20 mg/m3.

HANDLING AND STORAGE

Handling (Personnel)

Do not get in eyes, on skin, or on clothing. Avoid breathing vapors or mist. Wash thoroughly after handling.

Keep containers closed. Do not add water to contents while in container because of violent reaction.

Storage

Keep out of sun and away from heat, sparks, and flame. Keep container tightly closed and (drum) closure up to prevent leakage. Loosen closure carefully. Relieve internal pressure when received and at least weekly thereafter. Do not use pressure to empty. Be sure closure is securely fastened before moving container. Do not wash out container or use it for other purposes; replace closure after each withdrawal and return it with empty container.

EXPOSURE CONTROLS/PERSONAL PROTECTION

Engineering Controls

Good general ventilation should be provided to keep vapor and mist concentrations below the exposure limits.

 # Personal Protective Equipment

Have available and wear as appropriate for exposure conditions when handling containers or operating equipment containing sulfuric acid: chemical splash goggles; full-length face shield/chemical splash goggles combination; acid-proof gauntlet gloves, apron, and boots; long sleeve wool, acrylic, or polyester clothing; acid proof suit and hood; and appropriate NIOSH respiratory protection. In case of emergency or where there is a strong possibility of considerable exposure, wear a complete acid suit with hood, boots, and gloves. If acid vapor or mist are present and exposure limits may be exceeded, wear appropriate NIOSH respiratory protection.

(Continued)

EXPOSURE CONTROLS/PERSONAL PROTECTION (Continued)

Exposure Guidelines

Exposure Limits

Sulfuric Acid, 77 to 100%

PEL (OSHA)	1 mg/m3, 8 Hr. TWA
TLV (ACGIH)	1 mg/m3, 8 Hr. TWA, A2 STEL 3 mg/m3, A2 A2 (Sulfuric acid contained in strong inorganic acid mists)
AEL * (DuPont)	1 mg/m3, 8 & 12 Hr. TWA 3 mg/m3, 15 minute TWA

* AEL is DuPont's Acceptable Exposure Limit. Where governmentally imposed occupational exposure limits which are lower than the AEL are in effect, such limits shall take precedence.

PHYSICAL AND CHEMICAL PROPERTIES

Physical Data

Boiling Point	193-327 C (379-621 F) @ 760 mm Hg
Vapor Pressure	<0.3 mm Hg @ 25 C (77 F) <0.6 mm Hg @ 38 C (100 F)
Vapor Density	3.4
Melting Point	-35 to 11 C (-31 to 52 F)
Evaporation Rate	<1 (Butyl Acetate=1.0)
Solubility in Water	100 WT%
pH	<1
Odor	Odorless.
Form	Oily; clear to turbid liquid
Color	Colorless to light gray

GRADE	BOILING PT. DEG C	BOILING PT. DEG F	MELTING PT. DEG C	MELTING PT. DEG F	SPECIFIC GRAVITY
60 DEG TECHNICAL	193	380	-12	10	1.706
66 DEG TECHNICAL	279	535	-35	-31	1.835
1.835 ELECTROLYTE	279	535	-35	-31	1.835
98% TECHNICAL	327	621	-2	29	1.844
99% TECHNICAL	310	590	4	40	1.842
100% TECHNICAL	274	526	11	51	1.839

(Continued)

STABILITY AND REACTIVITY

Chemical Stability
Stable, but reacts violently with water and organic materials with evolution of heat.

Incompatibility with Other Materials
Vigorous reactions with water; alkaline solutions; metals, metal powder; carbides; chlorates; fuminates; nitrates; picrates; strong oxidizing, reducing, or combustible organic materials. Hazardous gases are evolved on contact with chemicals such as cyanides, sulfides, and carbides.

Decomposition
Releases sulfur dioxide at extremely high temperatures.

Polymerization
Polymerization will not occur.

TOXICOLOGICAL INFORMATION

Animal Data
EYE:

Animal testing indicates this material is corrosive to the eye, when tested undiluted. Animal testing indicates this material is a moderate eye irritant, when tested as 10 % solution.

SKIN:

The concentrated compound is corrosive. Animal testing indicates this material is a slight skin irritant, when tested as 10 % solution.

INGESTION:

LD50, rat: 2,140 mg/kg.

INHALATION:

8 hour, LC50, guinea pigs: 30 mg/m3.
Single and repeated exposure caused: Irritation of the respiratory tract. Corrosion of the respiratory tract. Lung damage. Labored breathing. Altered respiratory rate. Pulmonary edema. Repeated exposure caused: Altered red blood cell count.

CARCINOGENIC, DEVELOPMENTAL, REPRODUCTIVE, MUTAGENIC EFFECTS:

No adequate animal data are available to define the carcinogenic potential of this material. Limited studies do not suggest effects. In animal testing this material has not caused developmental toxicity. No animal data are available to define the following effects of this material: reproductive toxicity. This material has not produced genetic damage in bacterial cultures. It has not been tested for genetic toxicity in mammalian cell cultures or in animals.

(Continued)

ECOLOGICAL INFORMATION

Ecotoxicological Information

AQUATIC TOXICITY:
Slightly to moderately toxic.
96 hour LC50 - Bluegill sunfish: 10.5 ppm.
48 hour TLm - Flounder: 100-300 ppm

DISPOSAL CONSIDERATIONS

Waste Disposal

Cleaned-up material may be an RCRA Hazardous Waste on disposal due to the corrosivity characteristic. Do not flush to surface water or sanitary sewer system. Comply with Federal, State, and local regulations. If approved, neutralize and transfer to waste treatment system.

TRANSPORTATION INFORMATION

Shipping Information

DOT/IMO

Proper Shipping Name	SULFURIC ACID
Hazard Class	8
UN No.	1830
DOT/IMO Label	CORROSIVE
Packing Group	II
Reportable Quantity	1000 lb (454 kg)

Shipping Containers

Tank Cars.
Tank Trucks.
Barge.

REGULATORY INFORMATION

 # U.S. Federal Regulations

TSCA Inventory Status Reported/Included.

TITLE III HAZARD CLASSIFICATIONS SECTIONS 311, 312

Acute : Yes
Chronic : Yes
Fire : No
Reactivity : Yes
Pressure : No

HAZARDOUS CHEMICAL LISTS

SARA Extremely Hazardous Substance: Yes
CERCLA Hazardous Substance : Yes
SARA Toxic Chemical : No

(Continued)

OTHER INFORMATION

NFPA, NPCA-HMIS

NFPA Rating

Health	3
Flammability	0
Reactivity	2

Water Reactive.

NPCA-HMIS Rating

Health	3
Flammability	0
Reactivity	2

Personal Protection rating to be supplied by user depending on use conditions.

 # Additional Information

For further information, see DuPont Sulfuric Acid "Storage and Handling Bulletin".

Because of its corrosive characteristics and inherent hazards, Sulfuric Acid should not be used in sewer or drain cleaners or any similar application; regardless of whether they are formulated for residential, commercial or industrial use. DuPont will not knowingly sell sulfuric acid to individuals or companies who repackage the product for sale as sewer or drain cleaners, or any other similar use.

The data in this Material Safety Data Sheet relates only to the specific material designated herein and does not relate to use in combination with any other material or in any process.

Responsibility for MSDS	DuPont Chemicals Engineering & Product Safety
Address	Barley Mill Plaza, BMP 23 Wilmington DE 19880
Telephone	(302) 892-7113

# Indicates updated section.

End of MSDS

ABB

Main Cooling Water System

Description of System PA

HTDA 601 427 E

A

1

Q 200015 P 101 Ae3 2-88

ABB

Table of Contents

Section	Title	Page	Rev.
V	General Description		
V.1	System purpose	V 1	A
V.2	System layout	V 1	
V.3	Operating mode	V 2	
X	Operation		
X.1	General information	X 1	
X.2	Operating and auxiliary media	X 1	A
X.3	Measures and checks before start-up	X 1	
X.4	Filling of the system	X 1	
X.5	Normal operation - start-up	X 2	
X.6	Emergency operation	X 3	A
X.7	Cooling tower operation	X 3	A
X.8	Shutdown	X 4	
X.9	Process monitoring	X 4	A
Y	Technical Data		
Y.1	System design data	Y 1	
Y.2	Flow diagram	Y 1	
Y.3	Legend - system components	Y 1	
Y.4	System diagram	Y 3	
Y.5	Hydraulic gradient diagram	Y 4	+

V.1 System purpose

A The task of the main cooling water system is to cool the steam turbine condenser and to supply the water into the secondary cooling water system.

V.2 System layout

The cooling water requirements for the main cooling water system is taken from the cooling water pump basin.

The return flow of the cooling water to the cooling tower is routed via main line 19PAB40 BR001 with the connected return lines from the secondary cooling water system:

19PCB20 - outlet of ST coolers
19PCB50 - outlet of GT coolers

The system design is characterized by the environ data on site and the operating conditions of the plant.

The major components of the system are:

- 3 x 50 % main cooling water pumps and
- 1 x 100 % auxiliary cooling water pump with a common pump basin
- piping system - with one inlet and one outlet lines between pump station and turbine building.
- counterflow mechanical draught wet cooling tower with 5 cells
- cooling tower bottom (like basin with water flow without water level with connection canal to the cooling water pump basin)
- the hydraulic layout of the system is based on the following levels:

reference level	+0.0	= 49.7' a.MSL
turbine building ground floor	+0.0	
top of secondary cooling water system	+18'	
top of cooling tower basin wall	+2.0'	
cooling tower - cooling water inlet	+18'1"	
bottom of cooling tower basin	+0.0'	
bottom of cooling tower canal	-4'3 3/4" till 5'3"	
water level at cooling water pump basin:		
max. normal (alarm)	-6'	
operating level - design	-9'	
operating level - MIN (alarm)	-11'	
trip of main cooling water pumps	-13'	
trip of auxiliary c.w.pump	-14'	

V.3 Operating mode

V.3.1 Operating conditions

The system is designed for the following operating conditions:

V.3.1.1 Standstill

The states of the individual components and the measures for their standstill preservation are specified in the relevant instructions.

V.3.1.2 Standby

Standby of individual components is defined in the relevant operating instructions and is an essential condition for operational standby of the system.

V.3.1.3 Normal operation

Operation of two main cooling water pumps via both condenser halves and the secondary cooling water system against 5 (at least 4) cooling tower cells.
All pumps must be operated alternately.

V.3.1.4 Emergency operation

This is a situation requiring emergency operation of one main cooling water pump and is only admissible with limited steam turbine output via one condenser half and the secondary cooling water system over a limited period of time (see also the relevant instructions for the components).

V.3.1.5 Change-over operation of the main cooling water pumps

For a short period one pump can deliver through:
- both condenser halves during the change-over process and
- cooling tower bypass valve and/or at least 3 cooling tower cells

In case of failure of one main cooling water pump the reserve standby pump starts automatically.

V.3.1.6 Inadmissible operation

- Pump operation against closed system
- Two pumps against one condenser half
- Two pumps against cooling tower bypass
- All three pumps in operation
- System operation against cooling tower cells at low air and cooling water temperature (freezing protection).

X Operation

X.1 General information

X.1.1 Operational readiness

Operational readiness of the system components and of the city water dosing and blowdown systems is to be provided in compliance with the relevant operating and maintenance instructions and it is to be checked before start of operation.

X.1.2 Long-term outages of entire plant

For long-term outages the instructions for standstill preservation for the individual components must be adhered to.

X.1.3 Operating instructions of components

To ensure operational reliability of the individual system components, the relevant operating instructions must be adhered to.

X.2 Operating and auxiliary media

X.2.1 Cooling water

A Cooling water quality: see water chemistry/cooling systems HTDA 601 456.

X.3 Measures and checks before start-up

- Pump valves (motor operated valves) 19PAB11/12/13 AA001 - disc closed but free to move
- Condenser valves 14PAB21/22/31/32 AA001- open
- Secondary cooling water system: ready for operation
- All drainage valves - closed
- Cooling tower bypass valve 19PAB40 AA001 - closed
- Cooling tower cell valves 19PAD 10/20/30/40/50 AA001 -closed
- Cooling tower bypass valve of water-water cooler outlet 19PCB16 AA001
  - at a cooling water temperature below 54 °F - open
  - at a cooling water temperature above 54 °F - closed

X.4 Filling of the system

The system will be filled with inhibited city water via 19 PAR 10 BR001, 19PAR10 BR002 and 19PAB20 BR203, 19 PAR 20 BR202.

The cooling water pump basin will be filled via valve 19PCB16 AA001.
Valve 19PAR10 AA003 will automatically be closed at a water level of -7.5'for start release of first cooling water pump.

The main cooling water system with the condenser will be completely filled, the secondary cooling water system will be filled up to the highest level on the outlet side.

After the system has been filled, the piping and components are vented manually.

The two condenser sections are provided with independent continuous venting by means of riser tubes through the machine house roof.

X.5 Normal operation

X.5.1 Start-up of the first main cooling water pump

State 0 - System full, ready for operation, pump valves in Pos. 1.
- Condenser valves 14PAB21/31 or 22/32AA001 open

Operating sequence	Pump valve	Pump	Cooling tower bypass valve
1	Pos. 1	Ready for op.	Closed
2	Pos. 1	Ready for op.	Pos. 1
3	Pos. 1	Start	Move Pos. 1 to Pos. 2
4	Move to Pos. 2	In operation	Move Pos. 1 to Pos. 2
5	Pos. 2, steady load	In operation	Move Pos. 1 to Pos. 2
6	Move to open	In operation	Pos. 2
7	Fully open or setting	In operation at Q_{max}=34000gpm	Pos. 2 Pos. 2

At a cooling water temperature of 59 °F (15 °C) or higher follow

	cooling tower cell valves	cooling tower bypass valves
8	at least 3 of 5 open	Pos.2
9	at least 3 of 5 open	Move to closed
10	at least 3 of 5 open	Closed

Follow operating states X.5.2 or X.6

X.5.2 Start-up of the second main cooling water pump

State 0 - All condenser valves 14PAB21/3122/32AA001 open
Cooling tower bypass valve closed

Operating sequence	Pump valve	Pump	Cooling tower cell valves
1	Pos. 1	Ready for op.	At least 4 open
2	Pos. 1	Less 60 sec past X $5^1/_{10}$ start	At least 4 open
3	Move to Pos. 2	In operation	At least 4 open
4	Pos. 2	Steady load	At least 4 open
5	Move to open	In operation	At least 4 open
6	Fully open or setting of pump flow	In operation	At least 4 open

Follow: Normal operation of system V.3.1.3.

X.6 Emergency operation

Refer to V.3.1.4 Follow on Op. X.5.1.
A One condenser half will be closed. First of all close inlet valve
A 14PAB21 AA001 or 14PAB22 AA001 and then close outlet valve 14PAB31AA001 or 14PAB32 AA001.

X.7 Cooling tower operation

A - Up to the cooling water temperature of 59 °F the system is on pump operation via cooling tower bypass.
A - Each time the cooling water temperature sinks to 59 °F the cooling tower fan is switched to half speed. When the cooling water temperature sinks further, one fan after the other are switched off successively.
A - The reverse order applies to the cooling tower fans on reaching a water temperature of 64 °F at first all fans are started at half speed and then at full speed.

A

X.8 Shutdown from normal operating conditions

Operating sequence:

0 Cooling tower bypass valve closed
1 First main cooling water pump switched off
Main cooling water pump valve closed automatically,
but free to move to Pos. 1.
Operating conditions V.3.1.5

Either 2a One condenser half closed
Operating conditions V.3.1.4

Or 2b Second main cooling water pump switched off
Main cooling water pump valves closed automatically,
but free to move to Pos. 1
Cooling tower cell valves closed
Condenser valve 14PAB21/31 open
14PAB21/32 open.
Operating conditions V.3.1.2 - Standby of main cooling water system

3 Auxiliary cooling water pump start-up
Description of closed cooling water system PG

X.9 Process monitoring

X.9.1 Indication - see flow diagram HTDM 050 041

X.9.2 Alarm

Pump basin - water level	MIN : -11' MAX : - 6'
Main cooling water pumps	
- Motor winding temperature	high
- Bearing temperature	high
- Discharge pressure	MIN : 50' MAX : 90'
A Main cooling water temperature	MIN : 59 °F A MAX : 86 °F

X.9.3 Protective function of main cooling water pump

A X.9.3.1 Main cooling water pumps are automatically switched off at:

- Water level		less than	-13'
- Discharge pressure	10 sec	less than	55'
	20 sec	more than	100'
- Motor winding temperature		too high	
- Motor bearing temperature		too high	

A

Q 200015 P 101 Ae3 2-88

X.9.3.2 The first of two operating main cooling water pumps are switched off if

- One of the condenser valves are not fully open
- Less than 4 cooling tower cell valves are not fully open

X.9.3.3 One operating main cooling water pump is switched off if:

- One of the condenser valves of the operating condenser half is not fully open
- Less than 3 cooling tower cell valves or bypass valve of cooling tower is not open.

X.9.4 Cooling tower fans

In case of extreme vibrations the relevant fan will automatically be switched off.

Q 200015 P 101 Ae3 2-88

Y Technical data

Y.1 System design data

Design conditions	
Site elevation	52 feet above sea level
Ambient temperature	59 °F
Atm. pressure	14.7 psia
Relative humidity	60 %
Cooling water temperature	
Nominal	71 °F
Max. operating	95 °F
Cooling tower min.	54 °F
Cooling tower automatic operating program	59-65 °F
Cooling water system flow	
Nominal	55000 gpm
Operating range of one main cooling water pump	15000-34000 gpm
Max. expected cooling water flow of two main cooling water pumps	60000 gpm
System levels	See sect. V.2

Y.2 Main cooling water system flow diagram HTDM 050 041

Y.3 Legend to main cooling water system (System components)

19PAD01 BB001	Pump basin
19PAD01 AT001	Intake water bar screen
19PAC10/20/30 AT001	Pump suction strainer
19PAC10/20/30 AP001	Main cooling water pump (MCWP) Type: Byron Jackson 48 RXL 1 VCT
19PAB11/12/13 AA001	Combined (non-return, throttling and tight shut) valve Type: ADAMS A 21 (AGF) 30"
14PAB21/31 AA001	First condenser half shut-off valves
14PAB22/32 AA001	Second condenser half shut-off valves
14MAG02 AC001	Condenser
19PAD10/20/30/40/50 AA001	Cooling tower cell valves
19PAD10/20/30/40/50 AC001	Cooling tower cells
19PAD10/20/30/40/50 AN001	Cooling tower fans

Cooling tower supplier: MARLEY
Type: Counterflow - Model 477-45-05

19PAB40 AA001	Cooling tower bypass valve Type: ADAMS OSK 30"
19PAR10 AA001	Backflow preventer
19PAR10 AA002	Filling water throttling valve
19PAR10 AA003	Filling water shut-off valve
19PAB20 AA201	Blowdown valve
19PAB20 AA203	Filling and flush valve
19PAD60 AP001	Drain pump (sump pump) HOMA A4/4-280E/304B

System diagram
Main cooling water system
HOPEWELL

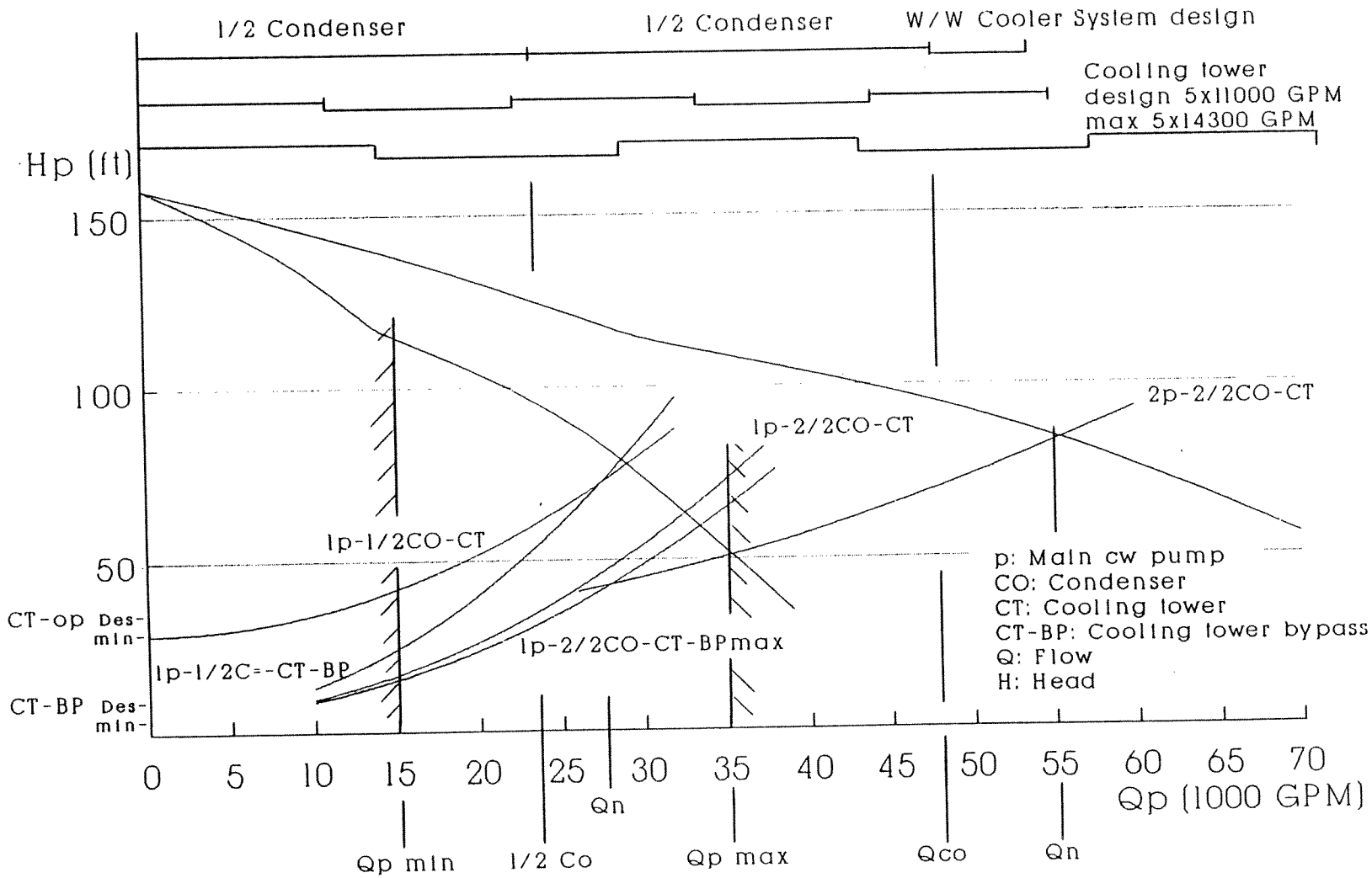

Hydraulic gradient diagram
Main cooling water system
HOPEWELL

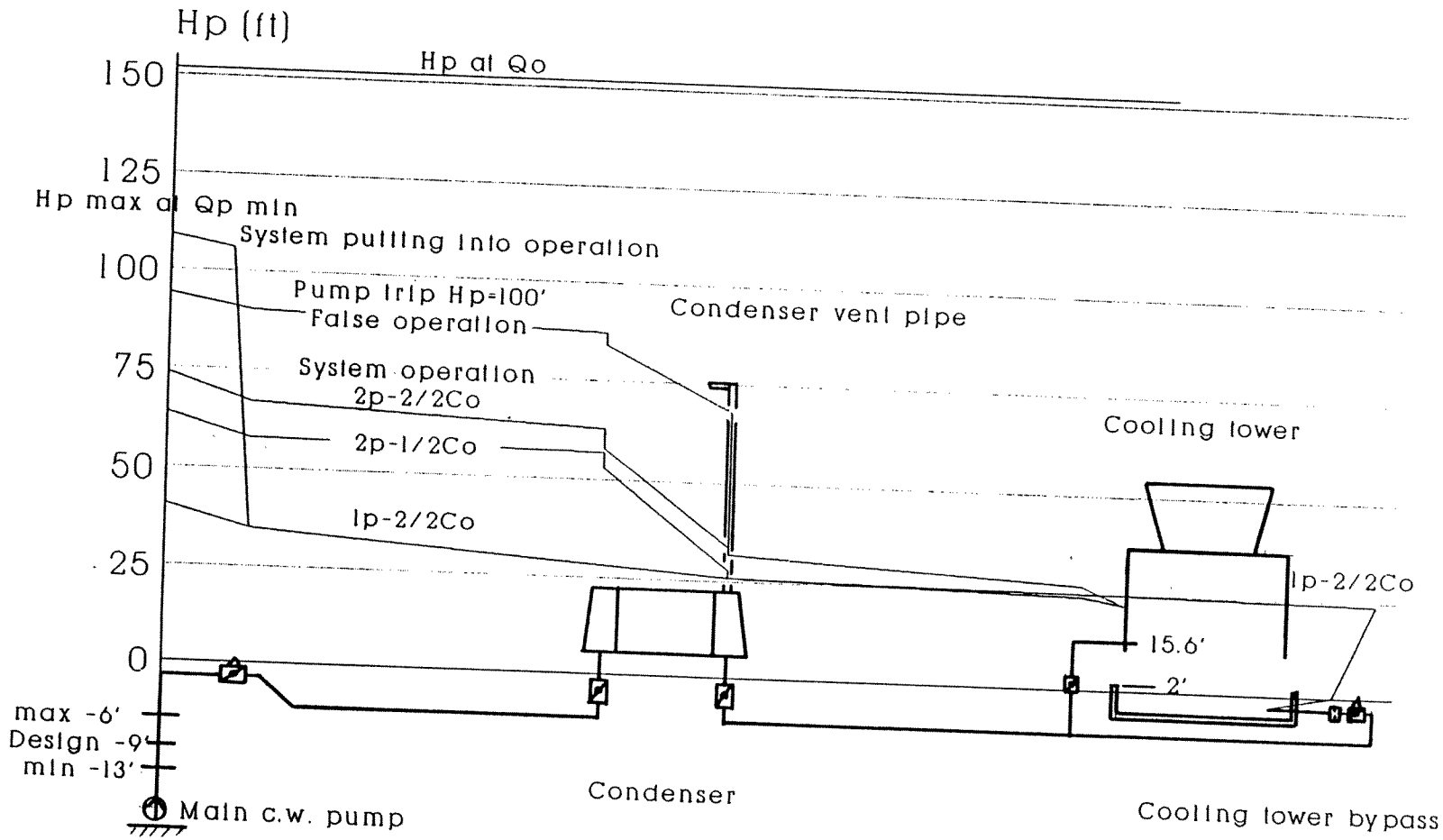

HTDA 601 427 E
Y 4

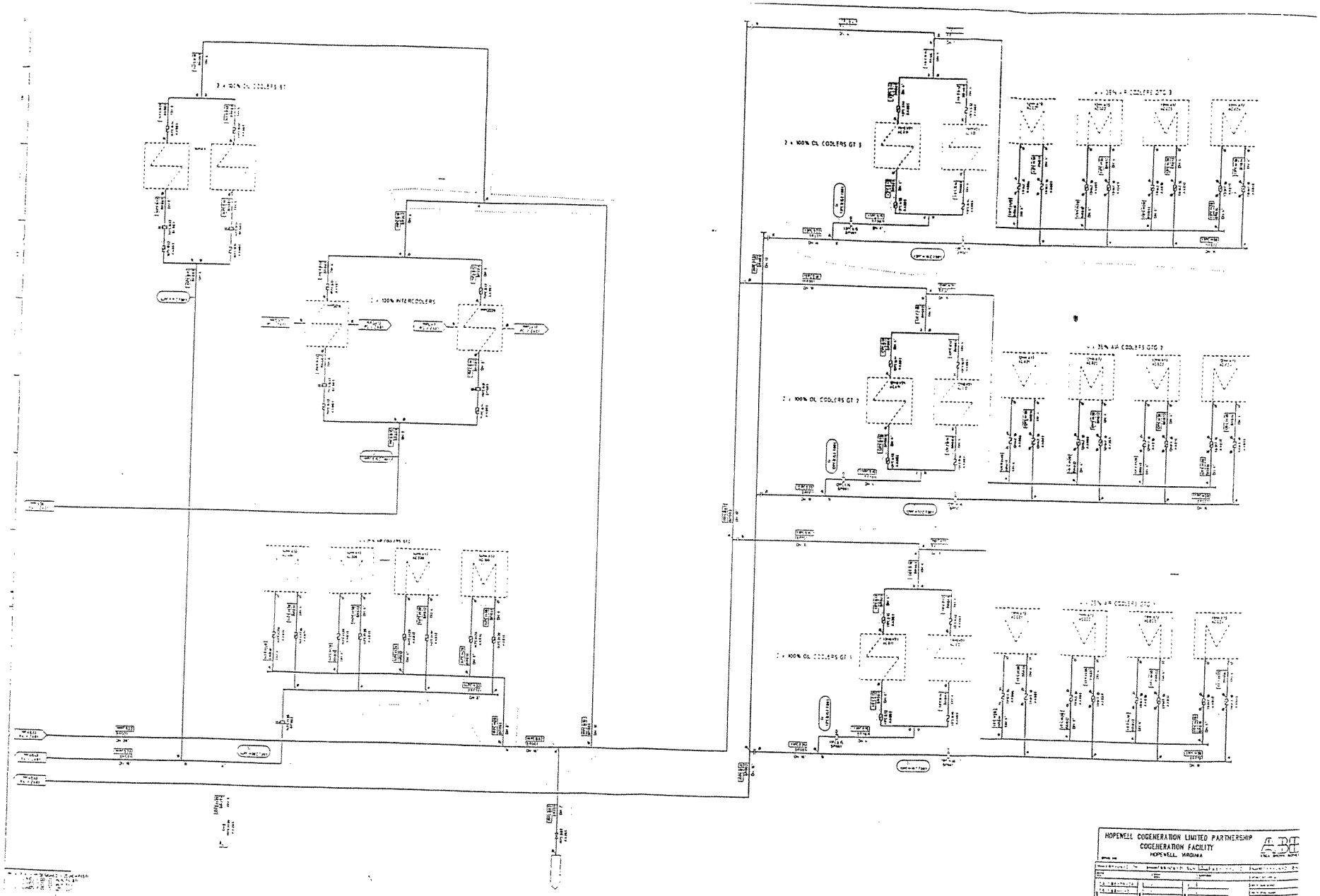
2 x 100% OIL COOLERS GT 3
2 x 100% OIL COOLERS GT 2
2 x 100% OIL COOLERS GT 1
2 x 100% INTERCOOLERS
HOPEWELL COGENERATION LIMITED PARTNERSHIP
COGENERATION FACILITY
HOPEWELL, VIRGINIA
PC / IA01
SECONDARY COOLING WATER SYSTEM

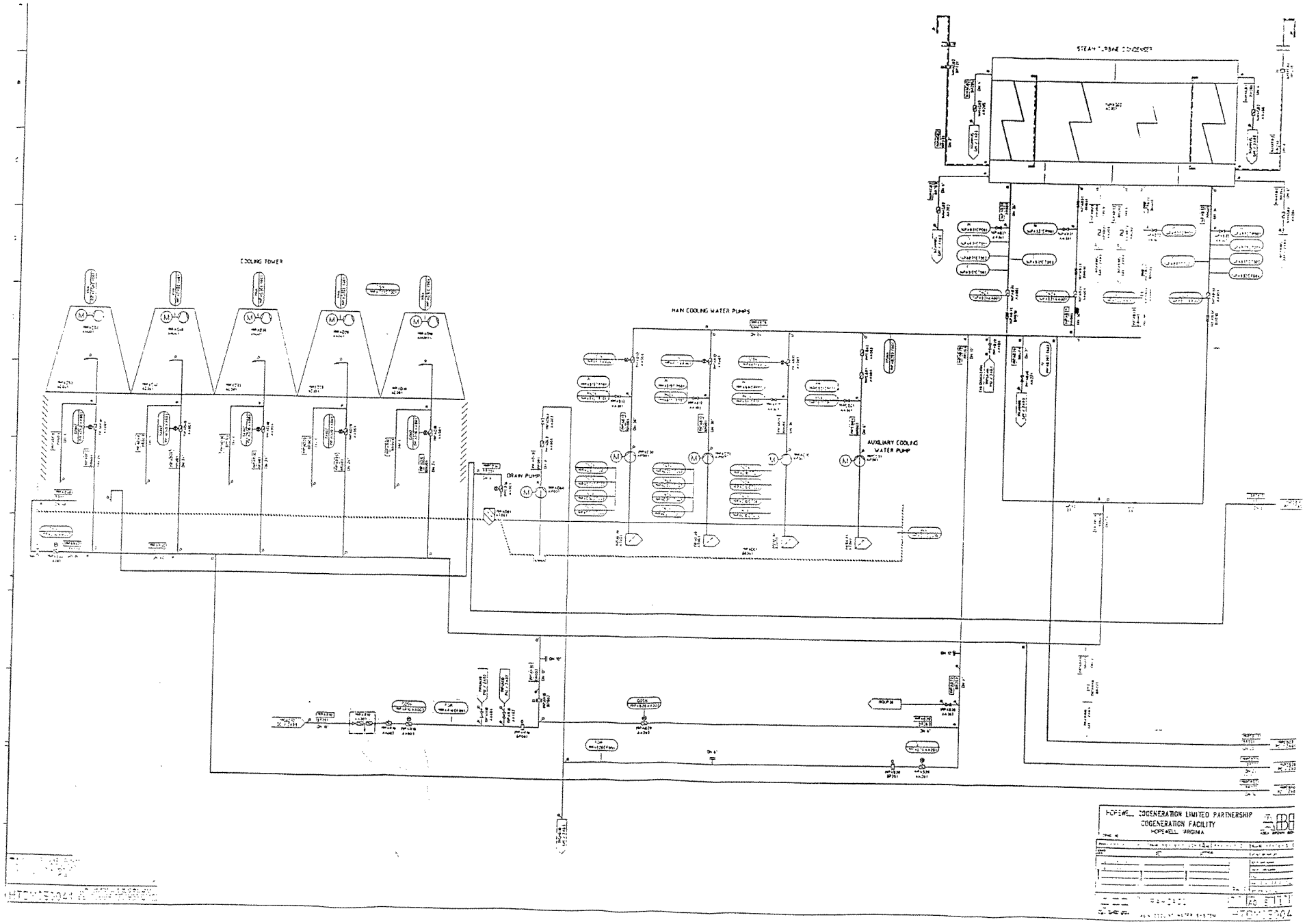
STEAM TURBINE CONDENSER
COOLING TOWER
MAIN COOLING WATER PUMPS
AUXILIARY COOLING WATER PUMP
DRAIN PUMP
HOPEWELL COGENERATION LIMITED PARTNERSHIP
COGENERATION FACILITY
HOPEWELL, VIRGINIA

ABB

Secondary Cooling Water System

Description of System PC

ABB

Table of Contents

Section	Title	Page	Rev.
V	General Description		
V.1	System purpose	V 1	
V.2	System layout	V 1	
V.3	Operating mode	V 1	
X	Operation		
X.1	General information	X 1	A
X.2	Operating and auxiliary media	X 1	A
X.3	Normal operation	X 1	
X.4	Auxiliary operation	X 2	
X.5	Changeover of the pump	X 2	
X.6	Changeover of the outlet line	X 2	A
X.7	Process monitoring	X 2	A
Y	Technical Data		
Y.1	Secondary cooling water system flow diagram	Y 1	
Y.2	Main cooling water system flow diagram	Y 1	
Y.3	Legend to secondary cooling water system	Y 1	
Y.4	Consumer list	Y 1	
Y.5	System components	Y 1	
Y.6	Auxiliary cooling water pump	Y 1	+

V General description

V.1 System purpose

The task of the secondary cooling water system is to supply the following consumers with cooling water:

- ST generator air coolers
- ST oil coolers
- GT generator air coolers
- GT oil coolers
- Intercoolers = water/water cooler for closed cooling water system.

V.2 System layout

The cooling water required by the secondary cooling water system is taken from the main cooling water supply line.

The return flow of the cooling water to the cooling tower is routed via the following 3 lines:

- Discharge line of the ST cooling water system - line 19PCB20
- Discharge line of GT cooling water system - line 19PCB50
- Discharge line from the cooling sections of the water/water coolers directly to the cooling tower basin or to the sump of the main cooling water pumps - line 19 PCB 15.

V.3 Operating mode

V.3.1 Operating conditions

The system is designed for the following operating conditions:

V.3.1.1 Standstill

The states of the individual components and the measures for their standstill preservation are specified in the relevant instructions.

V.3.1.2 Standby

Standby of individual components is defined in the relevant operating instructions and is an essential condition for operational standby of the system.

V.3.1.3 Normal operation

- Combined cycle in operation
- Operation of secondary cooling water system in parallel operation to ST condenser.

V.3.1.4 Auxiliary operation

- Supplementary process steam generator (SPSG) in operation. +

X Operation

X.1 General information

X.1.1 Operational readiness

Operational readiness of the system components and of the dosing system is to be provided in compliance with the relevant operating and maintenance instructions and it is to be checked before start of operation.

X.1.2 Long-term outages of entire plant

For long-term outages the instructions for standstill preservation for the individual components must be adhered to.

X.1.3 Operating instructions of components

To ensure operational reliability of the individual system components, the relevant operating instructions must be adhered to.

X.2 Operating and auxiliary media

X.2.1 Cooling water

A Cooling water quality: see water chemistry/cooling systems HTDA 601 4

X.3 Normal operation

X.3.1 Measures and checks before start-up

- Open shut-off inlet and outlet valves of all coolers
- Drainage valves must be closed
- Pump valve 19PCB01 AA002 open

X.3.2 Filling of the system

The secondary cooling water system will be filled in parallel to the main cooling water system with inhibited city water.
The pipe system and coolers must be vented during filling.

X.3.3 Start-up/operation/shutdown

Start-up, operation and shutdown refer to the main cooling water system. The auxiliary cooling water pump serves as standby.

A

X.4 Auxiliary operation

One water/water cooler and auxiliary cooling water pump are in operation.

X.4.1 Measures and checks before start-up:

- Main cooling water pumps are out of operation
- Auxiliary cooling water pump is ready for operation
- Cooling tower cells are closed
- Cooling tower bypass valve is closed
- Blow-down system is closed
- Water level in pump sump is equal or higher than -9'
- Pump valve 19PCB01 AA002 open.

X.4.2 Secondary and main cooling water systems

are filled, drainage and vent valves are closed (see sect. X.3.2).

X.4.3 Start-up operation, shutdown

Auxiliary cooling water pump
- is started by switch-on command
- works continuously
- shutdown by switch-off command.

X.5 Changeover from auxiliary cooling water pump to main cooling water pump

On breakdown of the auxiliary cooling water pump one of the main cooling water pumps starts automatically according to own starting programme. On changeover of the pumps the water flow velocity in the system will also change and after a short period of time the flow will stagnate.

X.6 Changeover of the outlet line

Changeover valve 19PCB16 AA001 is controlled by the cooling water outlet temperature of the water/water coolers 19PCB15 CT001:

A - It is closed for temperatures higher than 54 °F.
A - It is open for temperatures lower than 54 °F.

X.7 Process monitoring

X.7.1 Indication - local

Temperature:
All cooling water outlet temperatures of the consumer group.

X.7.2 Alarm

Cooling water outlet temperature of the intercooler group (19PCB15 CT001):

A - Alarm for minimum temperature lower than 54 °F.
A - Alarm for maximum temperature higher than 106 °F.

X.7.3 Protective function

A Auxiliary cooling water pump is automatically switched off at:
- Water level less than -14 '.

A

Y Technical data

Y.1 Secondary cooling water system flow diagram HTDM 050 042

Y.2 Main cooling water system flow diagram HTDM 050 041

Y.3 Legend to secondary cooling water system

PC	Secondary cooling water system
19PCB02 BR001	Supply line to PC system
19PCB15 BR001	Discharge line from water/water cooler
19PCB20 BR001	Discharge line from ST coolers
19PCB50 BR002	Discharge line from GT coolers
19PCC01 AP001	Auxiliary cooling water pump
19PCB16 AA001	Motor drive bypass valve
19PGD10/20	2 x 100% intercoolers (water/water cooler)
14 MAV	2 x 100% ST oil coolers
14 MKA 13	4 x 25% ST generator air coolers
11/12/13 MBV 21	3 x (2 x 100%) GT oil coolers
11/12/13 MKA 13	3 x (4 x 25%) GT generator air coolers

Y.4 Consumer list

	Consumption
ST oil cooler	500 gpm
ST generator air cooler	1000 gpm
GT oil cooler	160 gpm
GT generator air cooler	630 gpm
Intercooler (w/w cooler)	620 gpm

Y.5 System components

See components' operating manual

Y.6 Auxiliary cooling water pump

Manufacturer	Byron Jackson
Pump type end size	10 GH - 2 stg

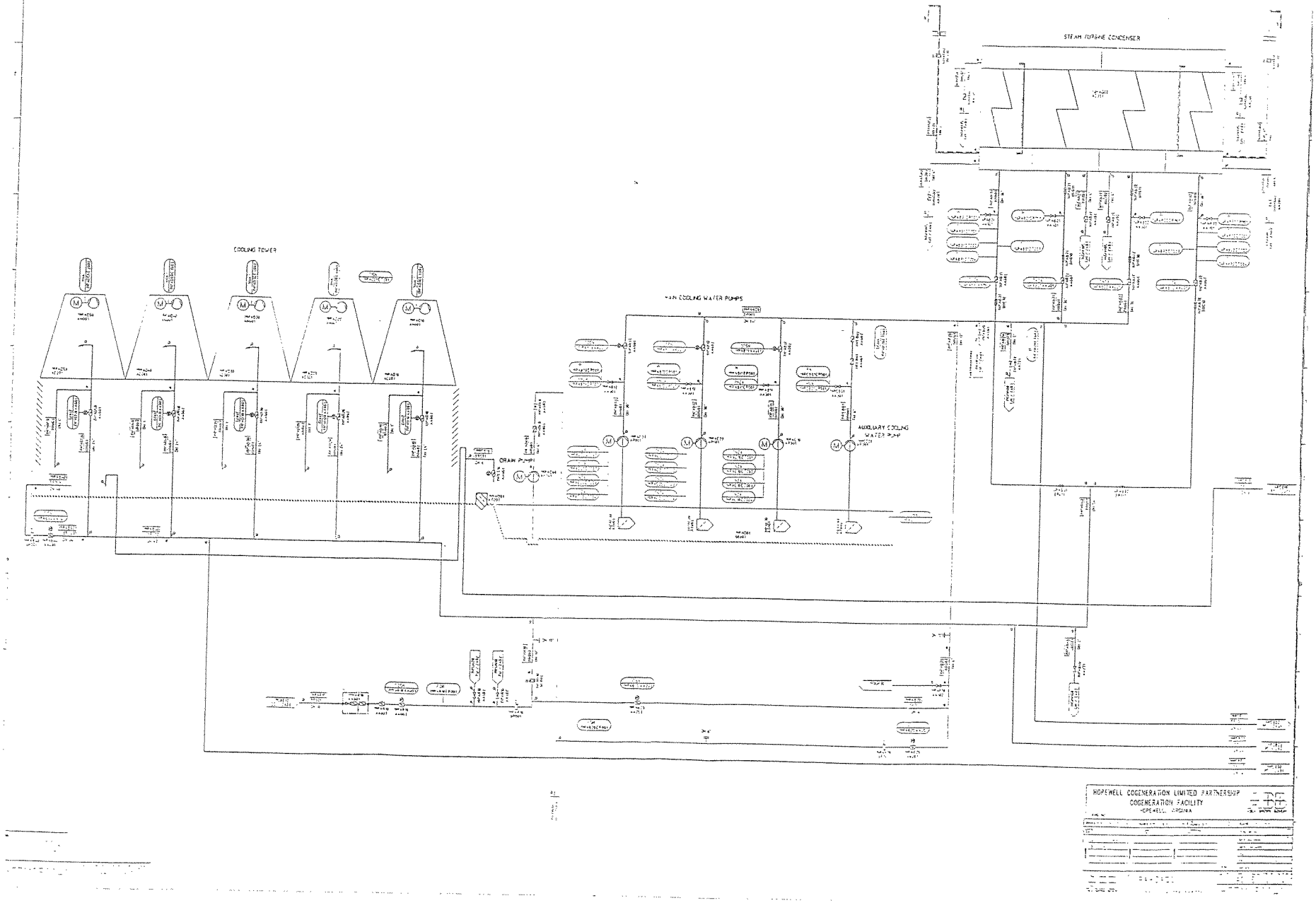
STEAM TURBINE CONDENSER
COOLING TOWER
MAIN COOLING WATER PUMPS
DRAIN PUMP
AUXILIARY COOLING WATER PUMP
HOPEWELL COGENERATION LIMITED PARTNERSHIP
COGENERATION FACILITY
HOPEWELL, VIRGINIA

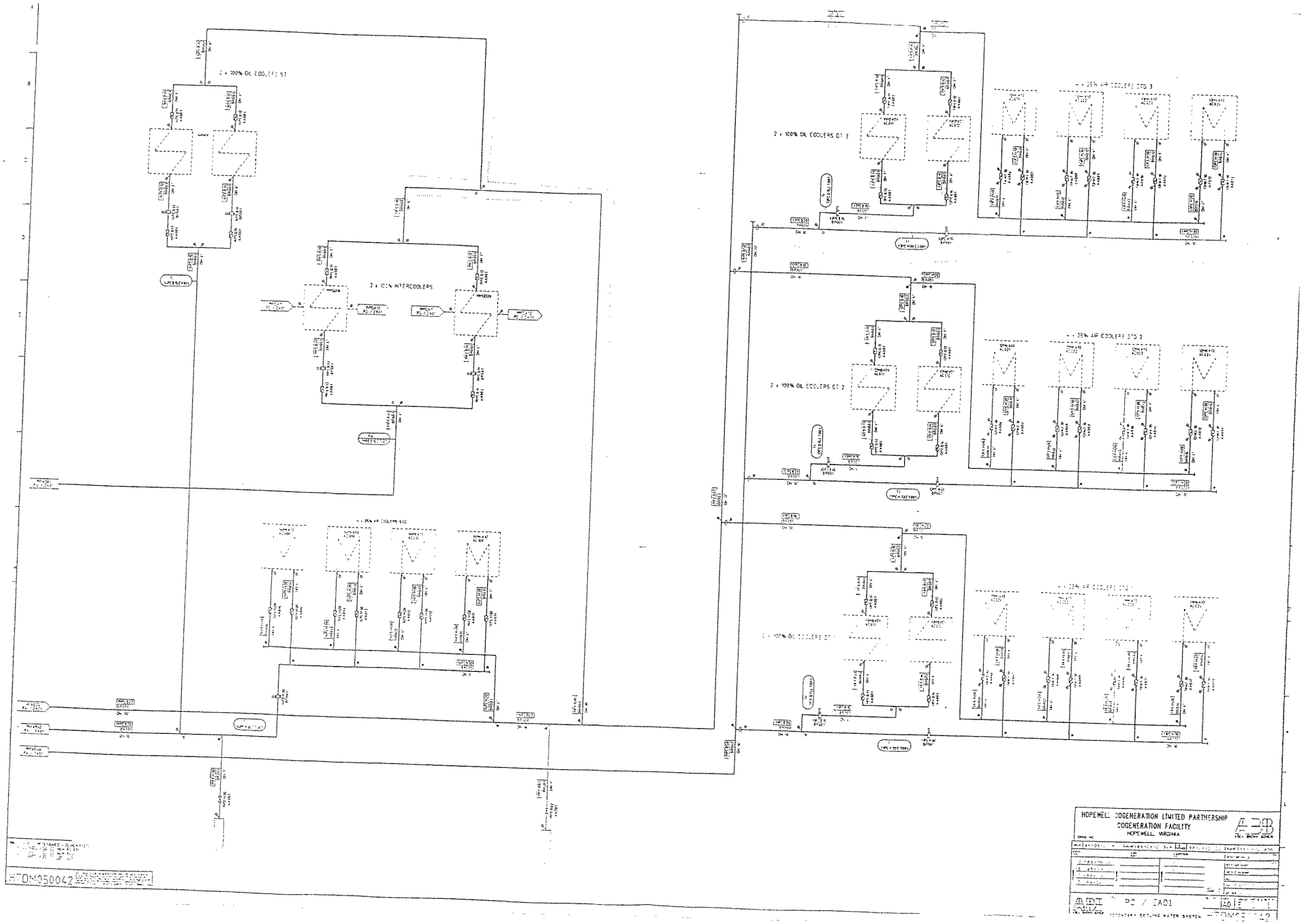
2 x 100% OIL COOLERS GT 1
2 x 100% INTERCOOLERS
2 x 100% OIL COOLERS GT 3
2 x 100% OIL COOLERS GT 2
HOPEWELL COGENERATION LIMITED PARTNERSHIP
COGENERATION FACILITY
HOPEWELL VIRGINIA
ABB
PC / EA01
HTDM050042

MARLEY

cooling tower OPERATING MANUAL

PREPARED FOR Hopewell Cogeneration Limited Partnership

Cogeneration Facility

Hopewell, VA

SPECIFICATION NO. HTDA 601 199

GPM 55,000 HW 94 CW 71 WB 51

Tower Model No.	477-4.5-05
Tower Serial No.	477-12-425-89
Customer Order No.	MSMPG-21031
Marley Order No.	12-425-89
Geareducer & Ratio	12.98/1, Series 36
Fan Diameter	HM, 336"
Trial Fan Pitch	13°
Fan R.P.M.	137
Contract Brake Horse Power	168
Driveshaft	301, Class II
Flow Control Valve Size	N/A
Float Valve Size	N/A
Specials	---

Please refer to Marley Order Number and Tower Serial Number in correspondence concerning this tower.

THE MARLEY COOLING TOWER COMPANY

5800 Foxridge Drive — Mission, Kansas 66202

MARLEY

MANUAL

Marley Class 400 Counterflow Cooling Tower

Operation and Maintenance Instructions

DECEMBER, 1986

OM-400A

5800 Foxridge Drive — P.O. Box 2912 — Mission, Kansas 66201

OPERATION & MAINTENANCE INSTRUCTIONS — CLASS 400 COUNTERFLOW COOLING TOWER

NTED IN U.S.A.

TABLE OF CONTENTS

	Page
General	3
Pre-Starting Procedure	3
Starting Procedure	3
Operation	3
Unit Maintenance	4
Water Treatment	5
Spare Parts	6
Seasonal Shutdown Instructions	6
Tower Trouble Tips	7
Safety First	8
Inspection & Maintenance Schedule — Table 1	9
Cooling Tower Inspection Check List	10
Isometric View	12
Transverse Cross Section	13

CLASS 400 COUNTERFLOW COOLING TOWER

Operation and Maintenance Instructions

GENERAL

These instructions assist in obtaining efficient, long life from Marley counterflow cooling towers. Direct questions concerning cooling tower operation and maintenance to your Marley sales office or representative. Always include your tower serial number when writing for information or ordering parts. Look for this number on the sidewall casing.

PRE-STARTING PROCEDURE

CLEANING—Remove any dirt and trash which has accumulated in the cold water basin. Remove any sediment from the cold water collection basin, sump, and screens. Use a water hose to flush cold water collection basins.

OPERATE WATER SYSTEM—Start the circulating water pumps. Increase the flow of circulating water gradually to match design water flow rate. Circulate water over the cooling tower continuously for several days before starting the mechanical equipment and placing the cooling tower into continuous operation.

When starting in cold weather, follow procedures outlined in Cold Weather Operation.

INSPECTION—It is imperative that all operating assemblies be inspected before they are placed in operation. The following is a list of components to be checked before starting the tower:

1. Check drive shaft alignment. Realign if necessary. See Marley Drive Shaft Service Manual.
2. Check tightness of bolts that attach mechanical equipment support to the tower framing. Check tightness of bolts in fan cylinder joints and fan cylinder anchorage. Do not pull washers into the wood.
3. Check tightness of bolts at diagonals and columns, and at girts and columns in the area between fan and cold water basin.
4. Check tightness of the following bolted joints in the fan and drive assemblies:
   a. Fan hub clamp bolts (see Marley Fan Service Manual for correct torque setting).
   b. Fan hub cover bolts.
   c. Geareducer® and motor mounting bolts.
   d. Drive shaft coupling and guard bolts.
5. Check Geareducer oil for sludge or water by draining off and testing a sample as outlined in the Geareducer Service Manual. Check Geareducer oil level at "oil level" mark on the side of the case. Add oil as required. The oil level placard must be adjusted so that its "full" mark is at the same elevation as the "full" mark on the side of the Geareducer case. Check oil lines to be sure there are no leaks and all joints are tight. See Geareducer Service Manual for oil filling procedure and list of recommended lubricants.
6. Rotate fan by hand to be sure of free rotation and ample tip clearance. See Fan Service Manual.
7. Check motor insulation with a "Megger". See Maintenance Section of Marley Service Manual on Electric Motors.
8. Lubricate the motor according to motor manufacturer's instructions.
9. Test run each fan separately for a short time. Check for excessive vibration or unusual noise. If either is present, see Tower Trouble Tips on pages & of this manual. Fan must rotate clockwise when viewed from above. Recheck Geareducer oil level.
10. Check functioning of make-up water supply.
11. Make sure the blowdown or bleed-off will carry the proper amount of water.

STARTING PROCEDURE

FILL THE WATER SYSTEM—Fill the cold water collection basin and circulating water system until the operating water level is reached. See Operation Section, below. Prime and start the circulating water pumps. Increase the flow of circulating water gradually to design water flow rate to avoid surges of water hammer which could damage the distribution piping system.

Clean the sump screens several times during the first weeks of operation. After this, clean sump screens weekly.

When starting in cold weather, follow procedures outlined in Cold Weather Operation.

STARTING FAN—Start the fan. After 30 minutes of operating time to permit Geareducer oil to come up to operating temperature, check motor load with watt meter, or take operating volt and ampere readings and calculate motor HP. Refer to Marley Fan Service Manual for instructions. Pitch fans to pull correct contract horsepower when circulating design water rate at design hot water temperature.

OPERATION

TOWER PERFORMANCE—*Keep the cooling tower clean* and water distribution uniform to obtain continued maximum cooling capacity.

The capacity of a cooling tower to cool water to a given cold water temperature varies with the wet-bulb temperature and the heat load applied to the cooling tower.

As the wet-bulb temperature drops, the cold water temperature also drops. However, the cold water temperatures does not drop linearly with the wet-bulb temperature.

A cooling tower will not control heat load. The flow rate of water circulated through the cooling tower will deter-

mine the temperature range of cooling in conjunction with a given heat load. The hot water and cold water temperatures will increase with higher heat loads and/or high flow rates.

HOT WATER DISTRIBUTION SYSTEM—Maintain uniform water distribution at the nozzles (uniform spray cone). The amount of water circulated should approximate the contract requirements and the nozzle pressure should be kept constant. Lower pressures may indicate excessive losses in the piping system and/or insufficient pump capacity; greater pressures might indicate clogged nozzles and/or overpumping. If a greatly reduced water flow rate is desired, it may be advisable to change nozzle sizes to obtain the desired pressure and maintain proper water distribution.

COLD WATER COLLECTION BASIN—A suitable depth must be maintained to keep the pumps from pulling air into the line. The amount of "make-up" water required to keep the water in the collection basin at the required depth depends upon the "evaporation loss" and "blowdown".

FAN DRIVE—When using two-speed motors, allow a time delay of a minimum of 20 seconds after de-energizing the high-speed winding and before energizing the low-speed winding. Tremendous stresses are placed on driven machinery and motors unless the motors are allowed to slow to low-speed RPM or less before the low-speed winding is energized. When changing fan direction of rotation, allow a minimum of two minutes time delay before energizing the fan motor.

COLD WEATHER OPERATION—During periods of low temperature operation, 35°F to 40°F or below, ice will form on the relatively dry parts of the cooling tower that are in contact with the incoming air. Primarily, this includes the air inlet and adjacent structural framing.

Ice forming characteristics on any given cooling tower will vary, depending on velocity and direction of wind, circulating water rate, and heat load. Excessive ice formation may be controlled by regulating air and water flow through the tower by one or more of the following procedures:

1. Shut the fan down. This reduces the cooling air rate to a minimum and increases the quantity of warm water at the air inlet to a maximum. However, normal "fan off" operation causes reverse air flow by aspiration and may cause water blowout and therefore must be done *with caution and monitoring*. For automatic operation, a timer switch can be provided to shut the fan down for a few minutes each hour.
2. When a cooling tower has two-speed motors, operate the fans at half speed forward. This reduces the cooling air rate (heat transfer) and increases the quantity of warm water at the air inlet.
3. With no heat load on the circulating water, icing cannot be controlled. Towers *must not* be operated with reduced water rate and/or no heat load during freezing weather. If a by-pass directly into the cold water basin is used, all water must be by-passed.

   CAUTION: Reverse operation of fans is not recommended.

See "Fan Drive" for fan speed change precautions.

INTERMITTENT OPERATION—When the unit is operated intermittently during winter weather, it is necessary that the water be drained from the tower piping to insure protection against freezing and possible rupture.

UNIT MAINTENANCE

Well-maintained equipment gives the best oprating results and the least maintenance cost. Marley recommends setting up a regular inspection schedule to insure effective, safe operation of the cooling tower. Use the schedule in Table I to obtain continuously good performance with least tower maintenance. See Cooling Tower Inspection Check List in this manual. Keep a continuous lubrication and maintenance record for each cooling tower. Regular inspection and repair of personnel safety items, indicated by an asterisk in Table I, and a *record of same* is especially important.

HOT WATER DISTRIBUTION SYSTEM—Keep the circulating water and distribution system (piping and nozzles) clean and free of dirt, algae, and scale. Algae and scale may clog nozzles, eliminators, fill, and piping, and may collect on the equipment served thus reducing its performance. NOTE: See warning under "Water Treatment" section.

The access door in the fan deck with a short ladder to a small platform provides means for inspection of the plenum area above the eliminators.

Removal of an access hatch allows access to the spray chamber for inspection and maintenance of the nozzles and top fill.

Provide top surface protection before walking on the fill.

DRIFT ELIMINATORS—Eliminators should be kept clean. Do not walk or step on the eliminators without planking and safety harness.

COLD WATER COLLECTION BASIN (SUPPLIED BY OTHERS)—Inspect collection basin occasionally for leaks and repair if necessary. Keep cold water outlets clean and free of debris. Make-up and circulating water controls must operate freely and maintain the desired water quantity in the system.

TOWER FRAMEWORK—Keep framework bolts tightened. Pay particular attention to bolts in the mechanical equipment supports. Do not pull washers into the wood.

DRIVE SHAFT—Check drive shaft alignment and condition of couplings every six months. See the Drive Shaft Service Manual for correcting misalignment, balancing, or replacing parts.

ELECTRIC MOTOR—Lubricate and maintain each electric motor in accordance with the manufacturer's instructions. If repair work is necessary, contact the nearest representative of the motor manufacturer. See Warranty Section of Marley Service Manual on Electric Motors.

FAN—Inspect fan blade surfaces every six months. For

:ailed maintenance information, refer to Marley Fan Service Manual.

GEAREDUCER—Make weekly and monthly oil checks. Inspect internal parts during seasonal oil change. Refer to the Geareducer Service Manual for detailed maintenance instructions.

PAINTING—Periodically clean and, if necessary, recoat all metal parts subject to corrosion.

COOLING TOWER WOOD DETERIORATION—Treated wood in cooling towers could be damaged by decay anytime after the first year or two of service. If decay is discovered and corrected in its early stages, serious wood damage can be prevented. Routine inspections should be made to assure that decay is discovered before it is heavily advanced.

Decay is commonly of two very general types, soft rot and internal rot. Soft rot is easier to detect because it is almost always on the surface of wood members. It makes the surface soft and weak and in its more advanced stages the decayed wood can be easily removed. This type of rot occurs primarily in the flooded areas of the tower. Internal rot, as the name implies, occurs inside the wood members. For this reason it is more difficult to detect than is soft rot. Internal rot is most commonly found in the heavier members in the plenum areas of the tower. One of the best methods of inspection for internal rot is "sounding" with hammer blows. Members which have internal rot sound "dead" while non-rotted members have a "ring" or "live" sound. Areas which sound "dead" can be probed with a screwdriver or other pointed tool to verify the presence of internal rot.

Marley maintains a laboratory for detailed wood inspections and has personnel on its staff experienced in all aspects of wood deterioration and preservative treatment. In addition, several Marley publications are available which give detailed information on the subject of wood deterioration and treatment. Contact the nearest Marley sales office or representataive for more information about wood inspection services and for copies of publications.

WATER TREATMENT

BLOWDOWN—Blowdown, or bleed-off, is the continuous removal of a portion of the water from the circulating system. Blowdown is used to prevent the dissolved solids from concentrating to the point where they will form scale. The amount of blowdown required depends upon the cooling range (the difference between the hot and cold water temperatures) and the composition of the make-up water (water added to the system to compensate for losses by blowdown, evaporation and drift). The following table shows the amount of blowdown required to maintain different concentrations with various cooling ranges:

BLOWDOWN—% OF CIRCULATING RATE

COOLING RANGE—°F	1.5X	2.0X	2.5X	3.0X	4.0X	5.0X	6.0X
5	.78	.38	.25	.18	.11	.08	.06
10	1.58	.78	.51	.38	.25	.18	.14
15	2.38	1.18	.78	.58	.38	.28	.22
20	3.18	1.58	1.05	.78	.51	.38	.30
25	3.98	1.98	1.32	.98	.64	.48	.38

EXAMPLE: 7000 GPM circulating rate, 15° cooling range. To maintain 4 concentrations, the required blowdown is .38% or .0038 times 7000 GPM which is 26.6 GPM.

If tower is operated at 4 concentrations, circulating water will contain four times as much dissolved solid as the make-up water, providing none of the solids form scale or are otherwise removed from the system.

CHEMICAL TREATMENT—In some cases chemical treatment of the circulating water is not required if adequate blowdown is maintained. In most cases, however, chemical treatment is required to prevent scale formation and corrosion. Sulfuric acid or one of the polyphosphates is most generally used to control calcium carbonate scale. Various proprietary materials containing chromates, phosphates or other compounds are available for corrosion control. When water treatment chemicals are required, the services of reliable water treating companies should be obtained.

Slime, a gelatinous organic growth, and algae, a green moss, may grow in the cooling tower or heat exchangers. Their presence can interfere with cooling efficiencies. Proprietary compounds are available from water treating companies for the control of slime and/or algae; however, compounds which contain copper are not recommended. Chlorine and chlorine containing compounds are effective algaecides and slimicides but excess chlorine can damage wood and other organic materials of construction. If used, chlorine should be added as intermittent (or shock) treatment only as frequently as needed to control the slime and algae, and free residual levels should not exceed one part per million parts water (1 ppm). Chlorine and chlorine containing compounds should be added carefully since very high levels of chlorine may occur at or near the point of entry into the circulating water system.

FOAMING—Heavy foaming sometimes occurs when a new tower is put into operation. This type of foaming generally subsides after a relatively short period of operation. Persistent foaming can be caused by the concentrations of certain combinations of dissolved solids or by contamination of the circulating water with foam-causing compounds. This type of foaming can sometimes be minimized by increasing the blowdown, but in some cases foam depressant chemicals must be added to the system. Foam depressants are available from a number of chemical companies.

WATER DISCOLORATION—Woods contain some water soluble substances and these commonly discolor the circulating water on a new tower. This discoloration is not harmful to any of the components in the system and can be ignored. However, a combination of foaming and

discolored water can result in staining of adjacent structures if foam is picked up by air being pulled through the tower and discharged out the fan cylinders. Avoid operation of fans until the foaming is controlled.

MAINTENANCE OF FILL PERFORMANCE—

WARNING: Owner must keep water clean by treatment, screening, or filtering to avoid the possibility of fill clogging and loss of thermal performance.

Potential Causes of Fill Clogging:

Suspended materials—trash, etc.

Scale — Can be sulfates, silicates, carbonates, or oxides. Scaling effects can be accentuated by suspended muds.

Algae and/or Slime—Can control with chlorine or non-oxidizing biocides.

Possible Sources of Scale:

Calcium Sulfate—From make-up and sulfates produced by sulfuric acid for pH adjustment. Calcium sulfate should be kept below 1000 ppm expressed as $CaCO_3$.

Calcium Carbonate—Generally will not form scale in the cooling tower if carbonate scaling does not occur in the condenser.

Exceptions: If make-up water contains surplus free carbon dioxide, scaling may be inhibited in the condenser, but may occur in the tower fill because of CO_2 stripping.

Silicates and Oxides—Silica scale is virtually impossible to remove. Silica scale is unlikely if SiO_2 is held below 150 ppm. Oxides, such as iron oxide, can coat all parts of the system if soluble iron is present in concentrations above 0.5 ppm. Iron oxides do not usually develop into thick scales but can accentuate the development of other scales.

SPARE PARTS

Marley manufactures and maintains a stock of replacement parts for all cooling tower mechanical equipment. Shipment of these parts are normally made within ten days after an order is received. If emergency service is necessary, contact the local Marley sales office or representative for assistance.

To prevent prolonged shutdown periods in case of damage to the mechanical equipment, it is suggested that the following parts be carried in the owner's stock:

1. One fan assembly.
2. One Geareducer assembly.
3. One drive shaft assembly.

Be sure to furnish the tower serial number when ordering any parts.

SEASONAL SHUTDOWN INSTRUCTIONS

Tower—Drain all tower piping.
During shutdown, clean the tower and make any necessary repairs. Apply protective coating as required to all metal parts. Particular attention should be given to mechanical equipment supports, drive shaft and drive shaft guards.

Mechanical Equipment—
Geareducer (3 months or less shutdown).

1. Each month, drain water condensate from the lowest point of the Geareducer and its oil system. Check oil level and add oil if necessary. Operate to recoat all interior surfaces with oil.
2. At start-up, drain water condensate and check oil level. Add oil if necessary.

Refer to Geareducer Service Manual for maintenance and lubrication instructions.

Geareducer (3 months or more shutdown).

1. If the motors have space heaters, operate mechanical equipment one hour each month.
2. If the motors do not have space heaters, operate mechanical equipment one hour each week.
3. At start-up, operate mechanical equipment one hour or until oil is warm, then shut the equipment down. Drain the oil and refill with new oil.

Refer to Geareducer Manual for instruction on changing oil. Refer to Downtime Instruction Manual for more than 6 months downtime.

Electric Motors—

1. Do not start motor without determining that there will be no interference with free rotation of the fan drive.
2. Refer to Marley Cooling Towers Motor Operation and Maintenance instructions.
3. If shutdown period is longer than seasonal, contact your Marley sales office or representative for additional information.

TOWER TROUBLE TIPS

TROUBLE	CAUSE	REMEDY
Motor Will Not Start	Power not available at motor terminals	1. Check power at starter. Correct any bad connections between the control apparatus and the motor. 2. Check starter contacts and control circuit. Reset overloads, close contacts, reset tripped switches or replace failed control switches. 3. If power is not on all leads at starter make sure overload and short circuit devices are in proper condition.
	Wrong connections	Check motor and control connections against wiring diagrams.
	Low voltage	Check nameplate voltage against power supply. Check voltage at motor terminals.
	Open circuit in motor winding	Check stator windings for open circuits.
	Motor or fan drive stuck	Disconnect motor from load and check motor and Geareducer for cause of problem.
	Rotor defective	Look for broken bars or rings.
Unusual Motor Noise	Motor running single-phase	Stop motor and attempt to start it. Motor will not start if single-phased. Check wiring, controls and motor.
	Motor leads connected incorrectly	Check motor connections against wiring diagram on motor.
	Ball bearings	Check lubrication. Replace bade bearings.
	Electrical unbalance	Check voltages and currents of all three lines. Correct if required.
	Air gap not uniform	Check and correct bracket fits or bearing.
	Rotor unbalance	Rebalance.
	Cooling fan hitting guard	Reinstall or replace fan.
Motor Runs Hot	Wrong voltage or unbalanced voltage	Check voltage and current of all three lines against nameplate values.
	Overload	Check fan blade pitch. See Fan Service Manual. Check for drag in fan drive train as from damaged bearings.
	Wrong motor rpm	Check nameplate against power supply. Check rpm of motor and gear ratio.
	Bearings overgreased	Remove grease reliefs. Run motor up to speed to purge excessive grease.
	Rotor rubs stator bore	If not poor machining, replace worn bearing.
	Wrong lubricant in bearings	Change to proper lubricant. See motor manufacturer's instruction.
	One phase open	Stop motor and attempt to start it. Motor will not start if single-phased. Check wiring, controls and motor.
	Poor ventilation	Clean motor and check ventilation openings. Allow ample ventilation around motor.
	Winding fault	Check with Ohmmeter
	Bent motor shaft	Straighten or replace shaft.
	Insufficient grease	Remove plugs and regrease bearings.
	Deterioration of or foreign material in grease	Flush bearings and relubricate.
	Bearings damaged	Replace bearings.
	Incorrect fan blade pitch	See Fan Service Manual for blade pitching instrucitons.
Motor Does Not Come Up To Speed	Voltage too low at motor terminals because of line drop	Check transformer and setting of taps. Use higher voltage on transformer terminals or reduce loads. Increase wire size or reduce inertia.
	Broken rotor bars	Look for cracks near the rings. A new rotor may be required. Have motor service man check motor.
Wrong Rotation (Motor)	Wrong sequence of phases	Change any two of the three motor leads.
Geareducer Noise	Geareducer bearings	If new, see if noise disappears after one week of operation. Drain, flush and refill Geareducer. See Geareducer Service Manual. If still noisy, replace.
	Gears	Correct tooth engagement. Replace badly worn gears. Replace gears with imperfect tooth spacing or form.
Unusual Fan Drive Vibration	Loose bolts and cap screws	Tighten all bolts and cap screws on all mechanical equipment and supports.

TOWER TROUBLE TIPS (continued)

TROUBLE	CAUSE	REMEDY
Unusual Fan Drive Vibration (continued)	Unbalanced drive shaft or worn couplings	Make sure motor and Geareducer shafts are in proper alignment and "match marks" properly matched. Repair or replace worn couplings. Rebalance drive shaft by adding or removing weights from balancing cap screws. See Drive Shaft Service Manual.
	Fan	Be sure blades are properly positioned in correct sockets. Check match numbers. Make certain all blades are as far from center of fan as safety devices permit. All blades must be pitched the same. See Fan Service Manual. Clean off deposit build-up on blades.
	Worn Geareducer bearings	Check fan and pinion shaft endplay. Replace bearings as necessary.
	Unbalanced motor	Disconnect load and operate motor. If motor still vibrates, rebalance rotor.
	Bent Geareducer shaft	Check fan and pinion shaft with dial indicator. Replace if necessary.
Fan Noise	Loose fan hub cover	Tighten hub cover fasteners.
	Blade rubbing inside of fan cylinder	Adjust cylinder to provide blade tip clearance.
	Loose bolts in blade clamps	Check and tighten if necessary.

SAFETY FIRST

The tower has been designed to provide a safe working environment while either operating or shut down. The ultimate responsibility for safety rests with the Operator and Owner. When flow to the tower is shut off or when portions of the tower require maintenance, temporary safety barricades may be required around openings, and other safety precautions such as safety harnesses should be utilized where appropriate for compliance with OSHA regulations and standards and good safety practices.

Routine periodic maintenance must be performed on all personnel access and material handling accessories in accordance with the following schedule:

	Ladders, Stairways, Walkways, Handrails, Covers, Decks & Access Doors	Davits Derricks Hoists
1. Inspect for General Condition	Semi-Annually	Semi-Annually
2. Inspect & Repair for Safe Use	Yearly	
3. Inspect & Repair Before Each Use		As Required

INSPECTION & MAINTENANCE SCHEDULE

General Recommendations *(More frequent inspection and maintenance may be desirable)*	FAN & FAN GUARD	MOTOR	DRIVESHAFT & GUARDS	GEAREDUCER	ELIMINATOR	FILL	COLD WATER BASIN	HOT WATER BASIN	FLOAT VALVE	SUCTION SCREEN	CONTROL VALVES	STRUCTURAL MEMBERS	CASING	FAN CYLINDER	STAIRS, LADDERS, WALKWAYS, DOORS, HANDRAILS	DAVITS, DERRICKS, HOISTS
1. Inspect for clogging					M	M		W		W						
2. Check for unusual noise or vibration	D	D	D	D												
3. Inspect keys, keyways and set screws	S	S	S	S												
4. Make sure vents are open				S												
5. Lubricate (grease)		R									S					
6. Check oil seals				M												
7. Check operating oil level				D												
8. Check static oil level				M												
9. Check oil for water and sludge				M												
10. Change oil, at least				S												
11. Check fan blade tip clearance	S															
12. Check water level							D	D								
13. Check for leakage				W			S	S	S							
14. Inspect general condition	S	S	S	S	Y	S	Y	S	Y	S	S	S	Y	S	S	S
15. Tighten loose bolts	S	S	S	S								Y	R	S		
16. Clean	R	R	R	R	R	R	S	R	R	R	R					
17. Repaint	R	R	R	R												
18. Rebalance	R		R													
19. Completely open and close											S					
*20. Inspect/repair for safe use	Y		Y												Y	
*21. Inspect and repair before each use																R

D—daily; W—weekly; M—monthly; Q—quarterly; S—semi-annually; Y—yearly; R—as required

TABLE I

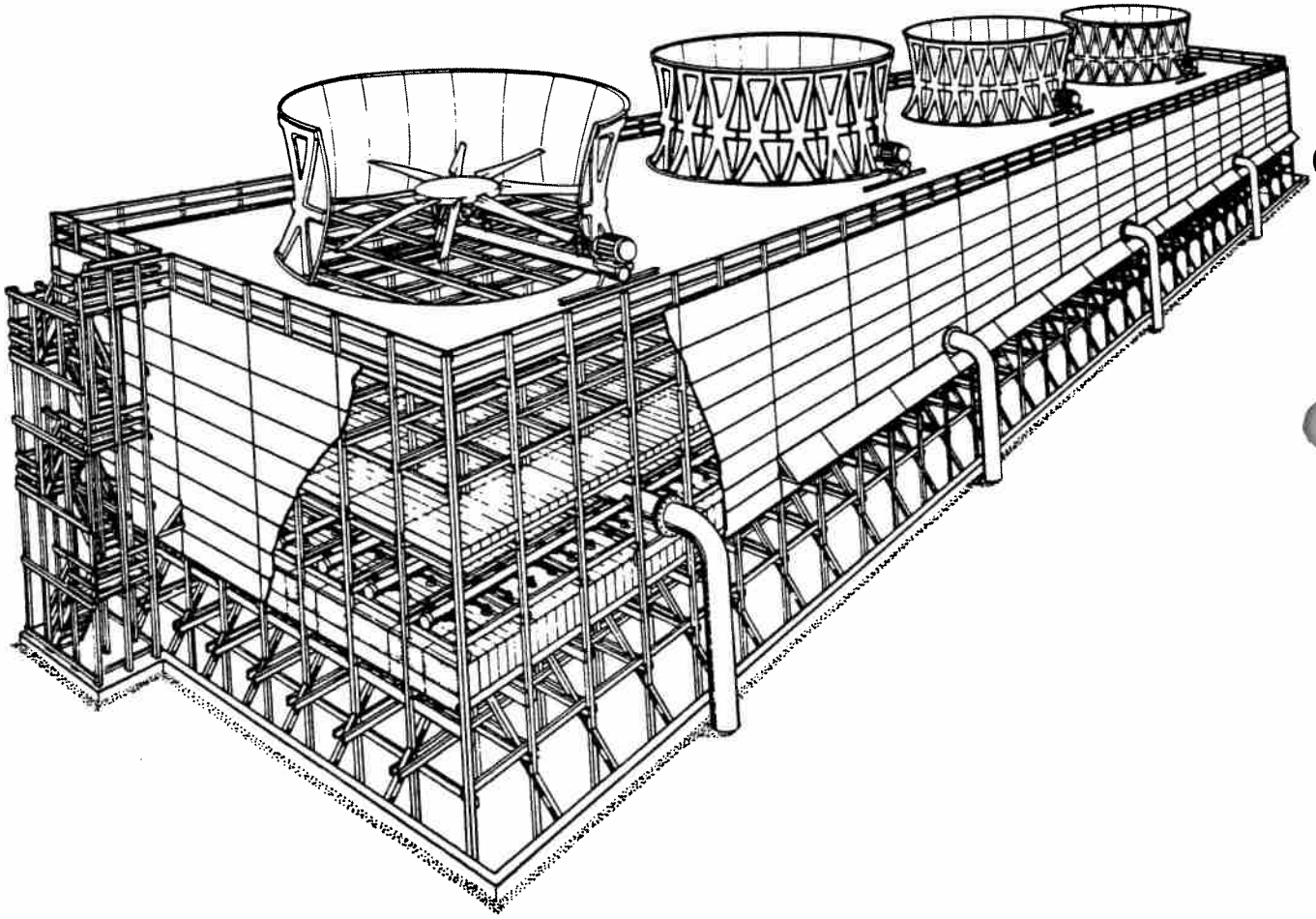

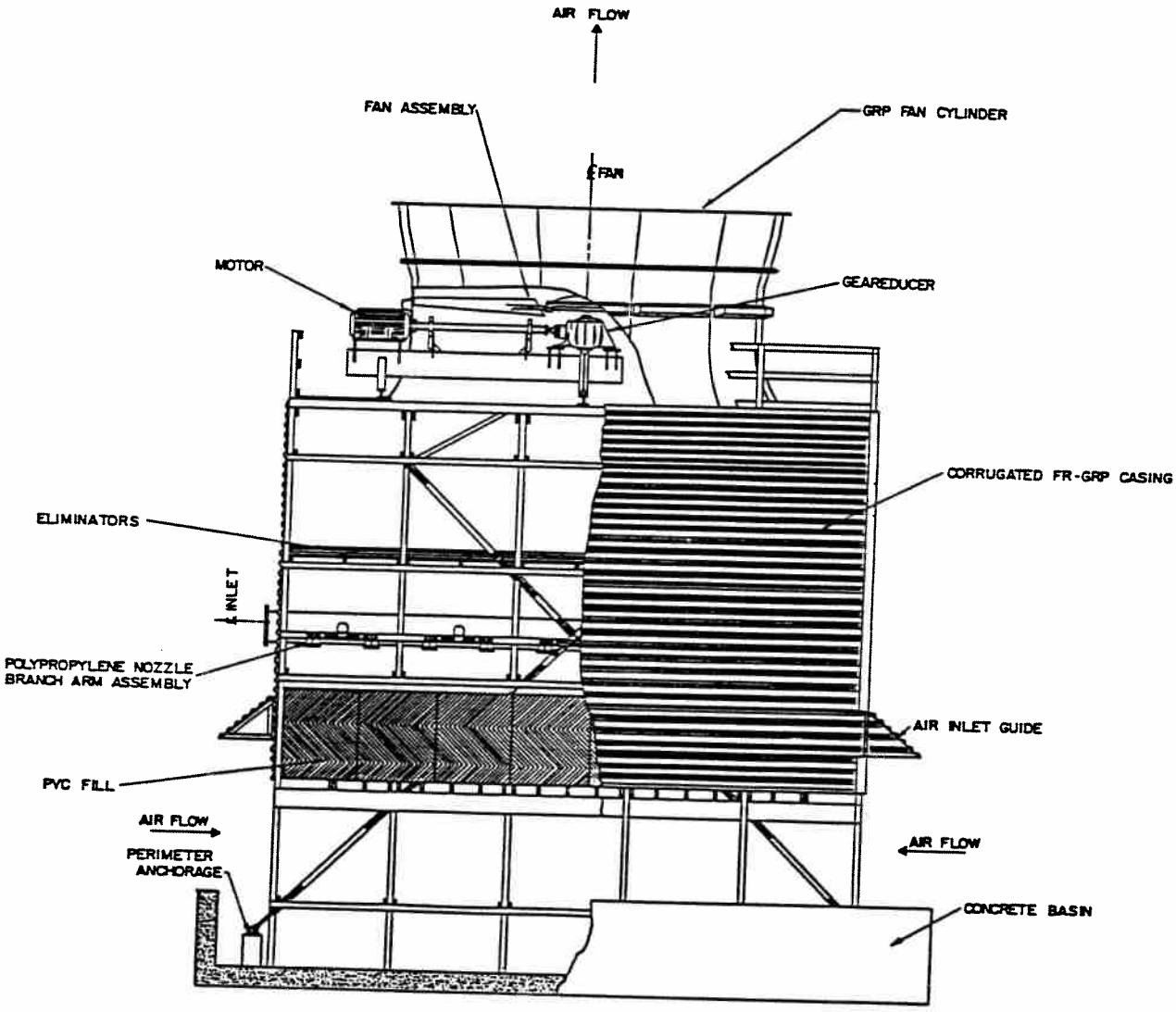

TRANSVERSE CROSS SECTION

COOLING TOWER INSPECTION CHECK LIST

ORIGINAL

Route to:

Owner _____ Date Inspected _____

Plant _____ Inspected By _____

Location _____ Tower Manufacturer _____

Owner Designation _____ Installed _____ 19____

Water Treatment Used _____ Model No. _____

Design _____ GPM _____ HW _____ CW _____ WB

Condition: 1-Good; 2-Repair; 3-Replace 1 2 3

EXTERIOR STRUCTURE:

1. Endwall Casing & Access Doors _____
2. Louvers (_____) _____
3. Drain Boards _____
*4. Stairway _____
5. Fan Deck _____
6. Fan Deck Supports _____
*7. Handrails _____
*8. Ladders & Walkways _____
9. Distribution System _____
   Headers (Type _____) _____
   Distribution Basin _____
   Water Level _____
   Flow Control Valves (Size _____) _____
   Nozzles (Size _____) _____
   Water Distribution _____
10. Spray System & Spray Nozzles _____
11. Fan Cylinders (Type _____) _____

INTERIOR STRUCTURE:

12. Fill (Type _____) _____
13. Columns _____
14. Girts _____
15. Diagonals _____
16. Partitions & Doors _____
17. Eliminators (Type _____) _____
*18. Walkway _____
19. Cold Water Basin (Type _____) _____
    Water Depth _____
20. Mech. Equip. Support (Type _____

HANDLING EQUIPMENT

*21. Davits, Derricks & Hoists _____
*22. Fan Cylinder & Deck Access Doors _____

Condition: 1-Good; 2-Repair; 3-Replace 1 2 3

MECHANICAL EQUIPMENT

23. Drive Shafts (Type _____) _____
24. Speed Reducer
    Series _____ Ratio _____
    Oil Level _____
    Oil Seals _____
    Vent _____
    Back Lash _____
    Pinion Shaft Play _____
    Fan Shaft End Play _____
    Last Oil Change (Date _____) _____
    Oil Used _____
25. Fans
    Dia. _____ Type _____
    Hub _____
    Blades _____
    Hub Cover _____
    Tip Clearance _____
    No Vibration _____ Vibration _____

Additional Components (If installed on tower)

Fan Guards _____
Oil Gauge & Drain Lines _____
Vibration Limit Switches _____
Other: _____

26. Motor: Mfr. _____
    Name Plate _____ HP _____ RPM
    Phase _____ Cycle _____ Volts _____
    Amperes _____ Frame _____

REPLACEMENT PARTS REQUIRED:

QUAN.	DESCRIPTION	ORDER FROM	DATE REQ'D

MAINTENANCE WORK REQUIRED:

DESCRIPTION	REQ'D COMPLETION

*Personnel safety item — inspect semi-annually, repair as required for safe use

(Use back of this sheet for additional requirements or notes.)

CS-2066B

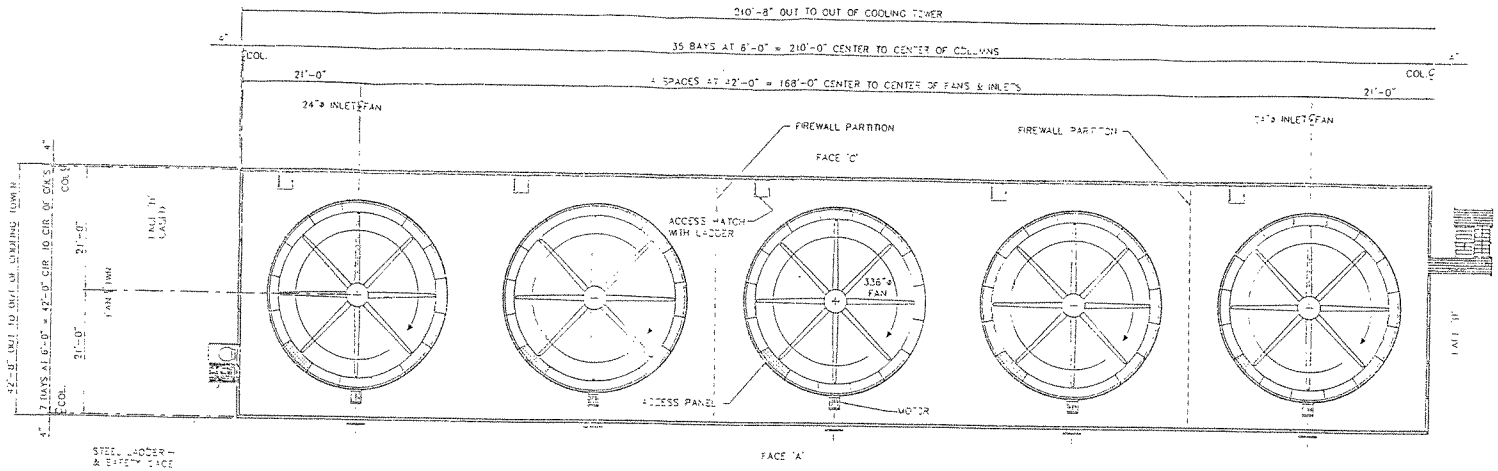

TOWER PLAN

NORTH

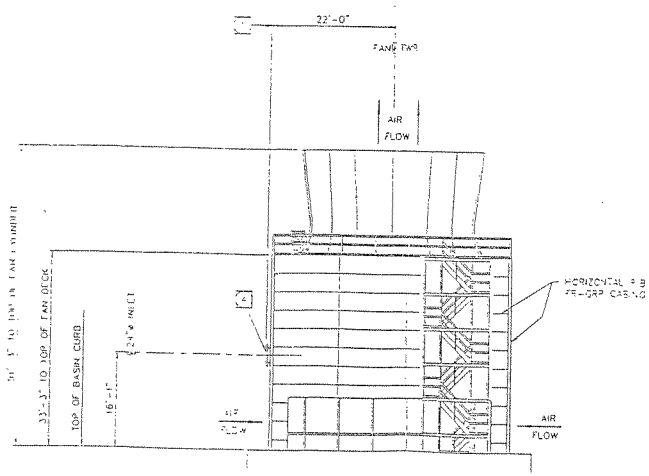

TOWER ELEVATION--FACE 'B'

GENERAL NOTES

1. MARLEY PIPING STOPS AT THE FACE OF 24" DIA. FLAT FACED F.R.P. FLANGE WHICH IS 1 1/8" (+1/2", -1/8") THICK. THERE ARE 20-1 3/5" DIA. BOLT HOLES ON 4 25 1/2" DIA BOLT CIRCLE. BOLT HOLES STRADDLE CENTERLINES. PURCHASER TO FURNISH CONNECTING HARDWARE INCLUDING STANDARD CUT WASHERS FOR F.R.P. FLANGE. FLANGE DRILLING CONFORMS TO CLASS 150 LB. ANSI B16.5 SPECIFICATIONS. GASKET TO BE 3/8" THICK FULL FACED SOFT NEOPRENE OF SHORE DUROMETER 50 +/- 5 (FURNISHED BY MARLEY).

   CAUTION: MARLEY PIPE SUPPORTS ARE DESIGNED TO SUPPORT ONLY THE WEIGHT OF PIPE AND WATER WITHIN THE LIMITS OF THE INLET FLANGE. CUSTOMER MUST PROVIDE SUPPORT FOR ALL PIPEWORK BEYOND THE LIMITS OF THE INLET FLANGE. CARE MUST BE TAKEN WHEN INSTALLING CONNECTING PIPING TO AVOID OVERLOADING OR DAMAGING THE TOWER STRUCTURE.

2. INSTALLER NOTE: CONNECTING PIPING MUST BE ALIGNED PROPERLY AT INSTALLATION TO AVOID DAMAGING OR MOVING THE PLASTIC PIPE WHEN PULLING UP FLANGE BOLTS.

3. REDUCED WATER FLOW OVER A COOLING TOWER IN COLD CLIMATES CAN RESULT IN ICE FORMATION IN THE FILL. IF THE PURCHASER'S APPLICATION REQUIRES A BYPASS SYSTEM, ITS DESIGN MUST BE REVIEWED BY THE MARLEY COMPANY.

4. MAXIMUM LOAD AT FLANGE TO BE 1000 LB. AXIAL AND 300 LB. HORIZONTAL & VERTICAL.

HOPEWELL COGENERATION LIMITED PARTNERSHIP
COGENERATION FACILITY
HOPEWELL, VIRGINIA

ABB
ASEA BROWN BOVERI

approved for construction
By
Changes could result in added cost and/or delay in shipment
MARLEY
DATE

HOPEWELL COGENERATION
HOPEWELL, VIRGINIA

SCHEMATIC VIEWS
FOR A MODEL 477-45-05 COUNTER FLOW COOLING TOWER

REV	DATE	DRAWN	CHECKED	APPROVED	
9	10-24-89	NEWCOLD	RHR	JHA	CAD

THE MARLEY COOLING TOWER CO.
WICHITA, KANSAS 67202

DRAWING NUMBER 12-425-89
SHEET NUMBER 88-42434

© AS OF DATE(S) IN THE BLOCK THE MARLEY COOLING TOWER COMPANY UNPUBLISHED-ALL RIGHTS RESERVED UNDER THE COPYRIGHT LAWS

Drawing No. 88-42434

DESIGN DESCRIPTION
Hopewell Cogeneration Project
Hopewell, Virginia

This describes the design, fabrication, delivery and erection of one Class 400 Counterflow cooling tower in accordance with Contract No. MSMPG-21031 to provide one Class 400 Mechanical Draft cooling tower cooling 55,000 gpm from 94°F to 71°F at an entering wet bulb temperature of 51°F.

Structural Design

The Class 400 structural frame system uses 4" x 4" columns on 6'-0 centers longitudinally and 6'-0 centers transversely. Horizontal bracing is on 6'-0 elevations. Longitudinal and transverse fan deck girts are of 2" x 6" lumber. All other girts are 2" x 4". The design is in accordance with CTI STD-114. A tension compression system of diagonal braces stiffens the structure and carries live loads to the base anchor points. The diagonals are of 4" x 4" or 4" x 6" lumber as required and are spliced across tower columns with glass reinforced plastic (GRP) connectors or corrosion resistant metal plates.

All structural frame connections are through-bolted with 1/2" diameter stainless steel machine bolts. Structural glass filled nylon shear plates are used when required to transmit loads. Anchor castings of HDG cast iron provide connections between the concrete basin (by others) and framing diagonals.

Lumber

The lumber is #1 Douglas Fir (minimum) treated with ACC per CTI Standard WMS-112.

Fan Deck and Partitions

The fan deck is of 1" nominal tongue and groove fir plywood and is designed for a live load of 60 psf. Partitions are provided in both the transverse and longitudinal directions. The transverse partitions consist of (2) 8 oz. FR-GRP extending from the underside of the fan deck to the top of the fill and (2) twenty-minute rated plywood fire walls extending from the underside of the fan deck to the water level.

The longitudinal partitions serve as a wind baffle and extend from the bottom of the fill to the normal operating water level and from transverse centerline to transverse centerline of the two end cells. The wind baffle is of 8 oz. FR-GRP.

Casing

Eight ounce (8 oz.) FR-GRP is used for end wall and side wall casing. Sheets are placed horizontally with horizontal joints lapped one corrugation to shed water inward. Vertical joints are lapped and sealed with caulking The casing is attached with 304 stainless steel screw shank nails with neoprene washers.

Fill

This tower is provided with polyvinyl chloride film fill. The fill is installed in packs nominally 1'-0 thick, 4'-0 wide and 4'-6 deep. The packs are made from corrugated fill sheets of 15 mil material. The sheets are stacked together in a cross corrugated configuration and are solvent welded together into packs. The packs are supported from the bottom by 2" thick joists and girts.

Eliminators

The eliminators are polyvinyl chloride of a three pass, cellular configuration. The 1'-0 wide by 6'-0 packs "nest" in the horizontal direction thus eliminating voids in the joints between packs. The packs rest horizontally on transverse girts and 2" x 4" joists at 6'-0 centers.

Distribution System

Hot water is distributed over the fill by injection-molded polypropylene nozzles and diffuser rings spaced on 2'-0 x 3'-0 centers. Each pair of nozzles is fed by an injection-molded polypropylene distributor tee attached to the bottom of a PVC distribution pipe by a gasketed and banded joint. The PVC distribution pipes are connected by flanged joints to a 24" FRP side inlet header.

Air Movement Package

Each cell includes a Marley manufactured Geareducer, drive shaft and unitized equipment support which offers the buyer single-source responsibility. Each component has been designed for a specific contribution to effective package operation.

The variable pitch fan is 28'-0 in diameter with 8 hollow glass reinforced epoxy blades, custom molded to an air foil shape. The fan hub is galvanized steel covered by a molded fiberglass nacelle. The fan hub is statically balanced at the factory with the individual blades marked for proper installation in the field.

The Series 36 Geareducer is a double reduction, right angle unit utilizing helical and spiral bevel gears. Oil bath lubrication is used for all Geareducer components and periodic greasing is not required. Marley Geareducer is designed specifically for cooling tower use.

The Series 301, Class II drive shaft is a one-piece unit which requires no intermediate bearings. The hollow tube and flanges are constructed of 304 stainless steel. The flexible, non-lubricated coupling members are neoprene bushings to ensure long and dependable service.

The torque tube mechanical equipment support is made of hot-dipped galvanized steel. This support assures permanent alignment of all mechanical equipment.

The fiberglass fan cylinder is manufactured in segments, each 18'-0 high. These are molded to a fluted cross section for stiffness and are joined using 304 stainless steel bolting. The lower portion of this cylinder has the profile of the section of an elipse to minimize entrance losses, which together with a construction that permits close tip clearance and tall recovery stack means maximum air delivery.

One two-speed, one-wind, 1800/900 rpm motor per cell is provided. The motors are TEFC motors with a 1.15 SF and are equipped with space heaters. Our proposal also includes one Metrix 5173-04 vibration switch per fan.

Access

A wood stairway at one end of the tower and a steel ladder with cager at the other end will be provided for access to the fan deck. In each cell, a 2'-6 square lift-off hatch and ladder give access to the eliminator levels from the fan deck. Eliminator packs lift out for access to the hot water distribution system and fill.

THE MARLEY WOOD INDUSTRIAL TOWER STRUCTURE

complies with all building codes and stress values provided by Forest Products Laboratory and other independent laboratory findings

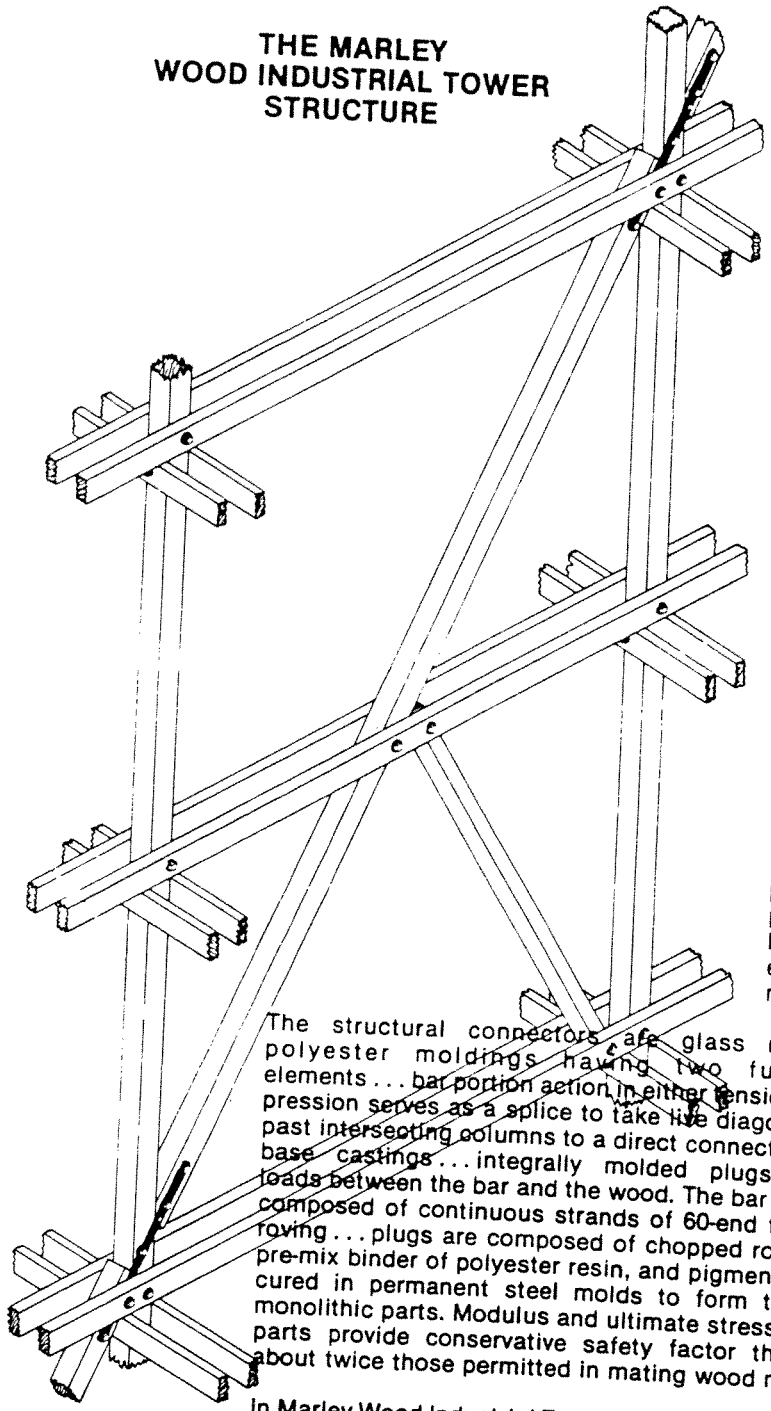

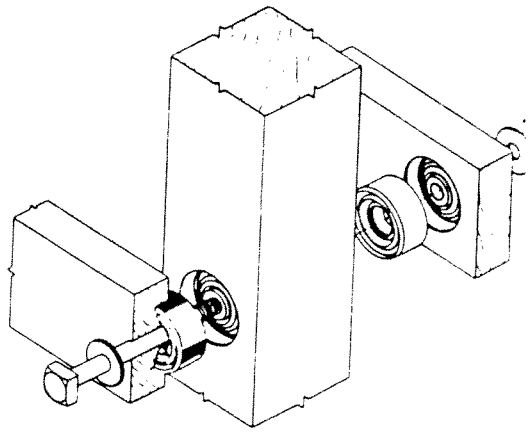

The SCR is applied in a conventional connector ring joi where values exceeding those available in a bol joi are desired. The structural ceramic material is a ple porcelain oxide of silicon and magnesium. The cor pressive ultimate of this material is 75,000 p.s.i. Permiss ble joint loads have Forest Product Laboratory test value established by procedures identical to other commerci ring connectors.

The structural connectors are glass reinforced polyester moldings having two functional elements . . . bar portion action in either tension or compression serves as a splice to take live diagonal loads past intersecting columns to a direct connection at the base castings . . . integrally molded plugs transfer loads between the bar and the wood. The bar portion is composed of continuous strands of 60-end fiberglass roving . . . plugs are composed of chopped roving . . . a pre-mix binder of polyester resin, and pigment is press cured in permanent steel molds to form thermoset monolithic parts. Modulus and ultimate stress of these parts provide conservative safety factor thru loads about twice those permitted in mating wood members.

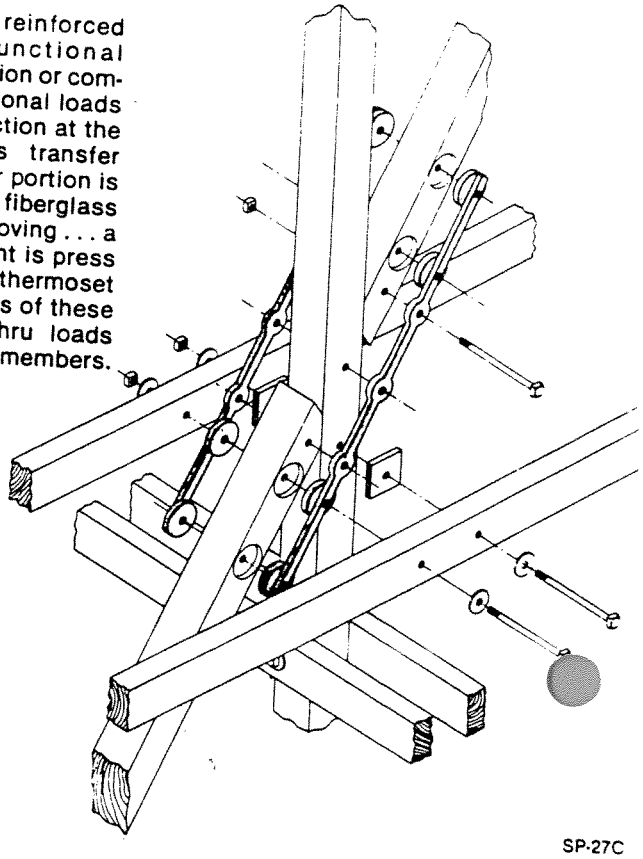

In Marley Wood Industrial Towers, joint assemblies have longer potential service life at full design value. This is because there is no solvent, acid, caustic, or salt reaction possible between any water that can be used in a cooling tower, and these connectors. This same inert character means that there are no metallic salt deposits to be absorbed into the wood and subject it to accelerated biological attack.

Date SEPTEMBER, 1982

TECHNICAL REPORT

THE MARLEY COOLING TOWER COMPANY

MARLEY

SUBJECT:

G R P*
DIAGONAL CONNECTORS
AND
SHEAR PLATES

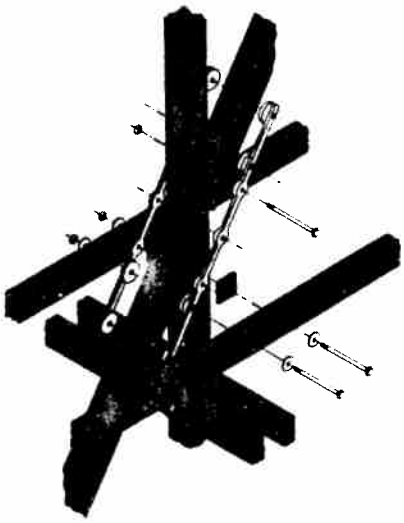

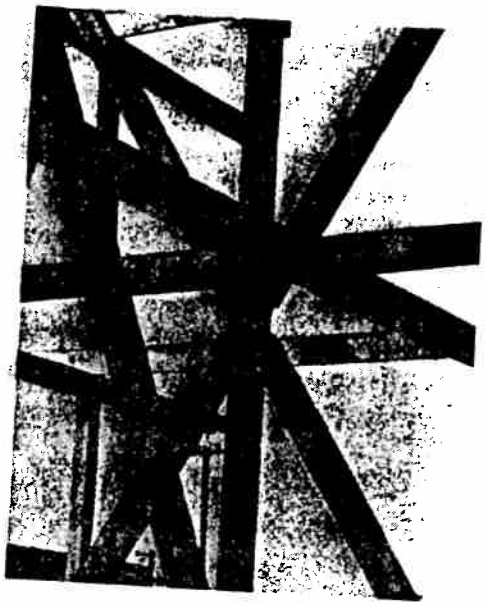

GRP DIAGONAL CONNECTORS

1. ADVANTAGES

In a cooling tower structure, it is desirable to keep diagonal bracing to a minimum for the least obstruction to the flow of air and to maximize the available space for fill. The GRP diagonal connectors, due to their capacity to transmit high loads from one wood member to another, permit the use of a minimum number of diagonals.

This ability to transmit high loads is achieved without use of metal plates and without slitting or notching either the columns or the diagonals. A load of either compression or tension in a direction parallel to the diagonal is removed by GRP bosses on the connector bar through counterbored holes in the diagonals.

Under design loads, the transferral of loads from the diagonal to the connector is achieved by bearing of the bosses on the counterbored holes. (See sketch page 2.) The bolts act only as clamps.

With large rotating fans on industrial cooling towers, a rigid frame is necessary to prevent sway in the structure. The GRP connectors with their boss and counterbore connection to the diagonal, combined with their attachment to both the columns and horizontal ties, provide a rigid joint. Under high wind or seismic loads which accumulate in the diagonals progressively toward the anchorage, the transferral of load is carried by the bearing of a large diameter boss instead of a small diameter bolt.

The rotting of wood surface adjacent to iron in any form is a well known occurrence in cooling tower frames. By using GRP, high loads can be transferred without the use of steel bars, and metal corrosion and wood rot are eliminated without the high expense of a non-ferrous metal bar.

**See Technical Report No. 101 for definition of terms and description of materials used in Marley GRP parts.*

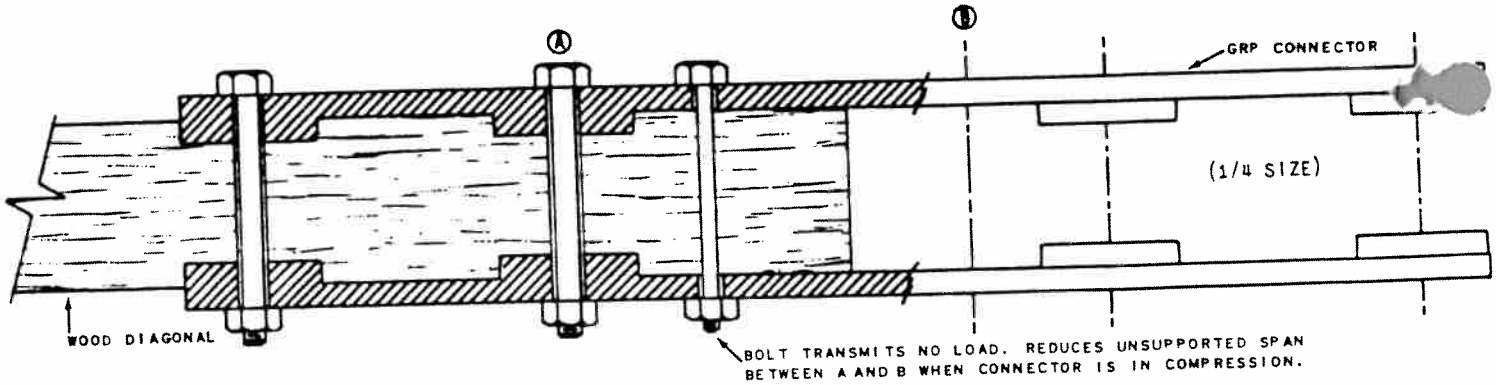

Cross Section thru Diagonal and Connectors

2. DEVELOPMENT

The development of the diagonal connector was a result of a long study of numerous framing systems. Metal cables and rods for pure tension diagonals, as well as numerous metal devices for connecting wood diagonals, were investigated and found undesirable from standpoints of field erection, strength capacity, corrosion resistance or economy. The photo below shows major steps of development that were made in moldings of the anchor connector to develop the required strength in the connector itself and in its capacity to transmit loads to and from the wood members.

Steps in Development of Molding for Anchorage Connector

To satisfy all the requirements of this part, polyester* reinforced with glass fiber* was chosen as the material. GRP laminates are familiar to everyone. The "glass" fishing rod has all but replaced other materials because of its properties. The Corvette automobile and accessory parts of many other automotive products are glass fiber and polyester laminates. The success of this material in small boats is a testimony of the resistance to outdoor weathering and water immersion. Chemical valves and combination insulators and guy lines are other examples of use of this material. Serving trays that must take severe impact and continual washing in hot detergents make use of the stellar qualifications of GRP. The fact that Marley has had a cooling tower fan with GRP blades operating in a refinery since 1954 with no sign of deterioration is further proof of the suitability of this material for tough cooling tower duty.

Accelerated exposure tests in the form of boiling water tests and strength tests of various polyester resins were used to determine the proper formulation for this application.

3. MANUFACTURE

The high tensile and compressive strength of the diagonal connectors is achieved through proper lay-up of the glass roving* and glass mat* in molding the laminate. The glass roving is pulled through a resin inpregnating tank and wrapped mechanically on a device to produce a predetermined number of turns. The anchor connector is wrapped with a double loop at the anchor end to reinforce the large boss. The sketches below illustrate this pattern of lay-up before it is placed in the mold.

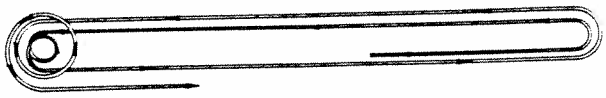

Anchor Connector Roving Lay-Up

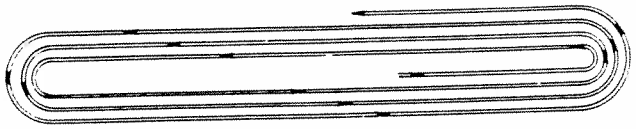

Other Connector Roving Lay-Up

This impregnated roving with a weighed amount of premix* (chopped glass roving and polyester) for the bosses and unidirectional* glass mat on the outside surfaces is laid into a heated matched metal mold. Pressure and heat are applied in a press to form the molding. The use of unidirectional mat on the surface (two layers at anchorage end—single layer elsewhere) restrains the laminate from splitting at the transition from the bar to the large anchorage boss and prevents surface curing cracks due to resin-rich* areas.

*See note on page 1, bottom of column 2.

Anchorage Connector Mold in Press

4. TESTS

To determine capacity of the diagonal connectors to withstand the various types of loads applied in usage, it was necessary to make two types of tests with the connectors engaged in wood framing diagonals and two types of tests on the connectors themselves. The final tests were conducted at General Testing Laboratories, Kansas City, Missouri on May 5, 9 and 19, 1958. Connectors used in the test were taken from a production run in inventory. The fabrication of the wood diagonals was done on production machinery at the Marley Stockton, California, plant.

The following results were obtained for the four types of tests conducted:

a. Compression tests to determine capacity of longest unsupported span as a column and capacity of bottom hub that connects with anchor casting at base of tower. Average ultimate strength for five tests was 22,800 lbs. for two connectors.

b. Compression tests to determine capacity of connector sections in wood. Average ultimate strength for five tests was 23,700 lbs. for two connectors.

c. Tension tests to determine capacity of bottom hub that connects with anchor casting at base of tower and connector section in wood. Average ultimate strength for seven tests was 23,400 lbs. for two connectors.

d. Tension tests to determine shear capacity between connector bosses and bar. Average ultimate strength for three tests was 15,300 for one connector, or in terms of two connectors, (as in the preceding tests) 30,600 lbs.

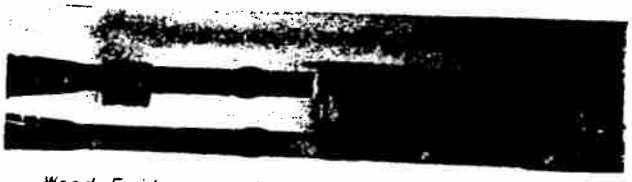

Wood Failure at 26,000# Test Load in Tension

To determine capacity of GRP connector to take repeated loadings, a test was conducted July 2, 1958. The maximum design load for a single anchorage connector is 6,250 lbs. A load of 7,000 lbs. was applied 65 times to a single connector with no sign of failure. A load of 11,000 lbs. was then applied 100 times to the same connector with slight shear failure in area of the bosses, but not structurally significant. A load was then applied until complete failure occurred at 21,200 lbs.

Forty-two of the various connectors were tested to failure in the tension on June 12, 1958 and June 16, 1958. This test was on the GRP connector only without the wood diagonal to determine consistency of the product and basis for quality control. The bosses were held in counterbored

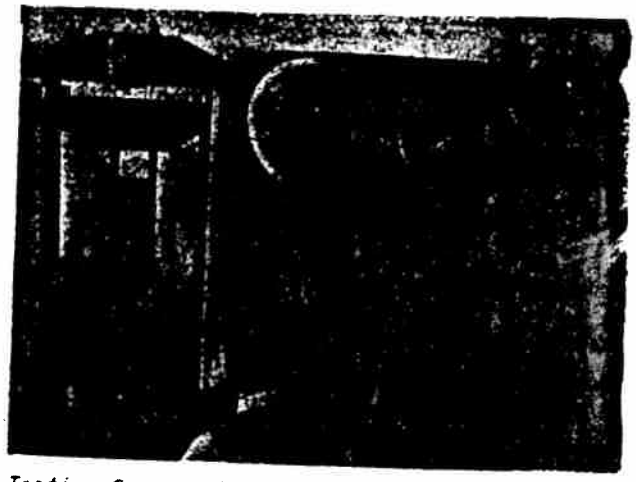

Testing Compression Capacity of Connector in Wood

recesses on steel plates on the test fixture. This test determined the capacity of the bar in tension and the shear value between the boss and the bar. In respect to the maximum allowable design loads, these tests gave a safety factor which varied from 2.82 for the anchorage connectors to 4.10 for the uppermost connectors in the tower frame. To determine the actual safety factor which exists on a given tower frame, it is necessary to determine the actual design loads in the connectors from the stress diagram for the wind or seismic load which has been specified. It is rare, if ever, that the maximum allowable design load is used, hence the safety factor is higher than indicated when compared with maximum allowable loads.

5. QUALITY CONTROL

To insure control of quality in these load carrying parts, an acceptance inspection procedure for GRP connectors and shear plates has been established.

The procedure calls for an inspection of the dimensional, visual and load carrying characteristics of the parts.

The dimensions are controlled closely by the mold: one part per lot is checked.

Visual and loading inspections are made in accordance with generally accepted statistical sampling plans. The visual inspection places a limitation on size of such defects or cracks, edge chips, shrinks, voids and dry glass spots. The parts are loaded in tension to two times the maximum design load. The materials used to make the GRP connectors are controlled by engineering specifications.

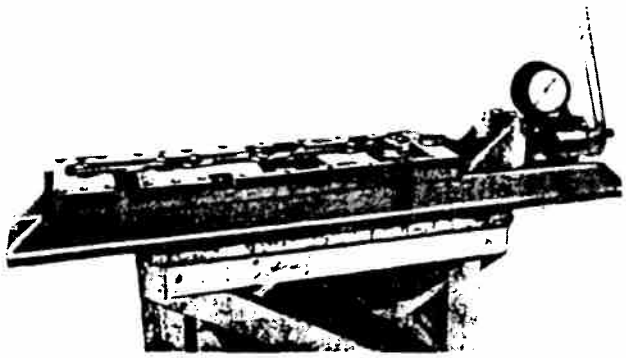

Inspection Test Fixture

SHEAR PLATES

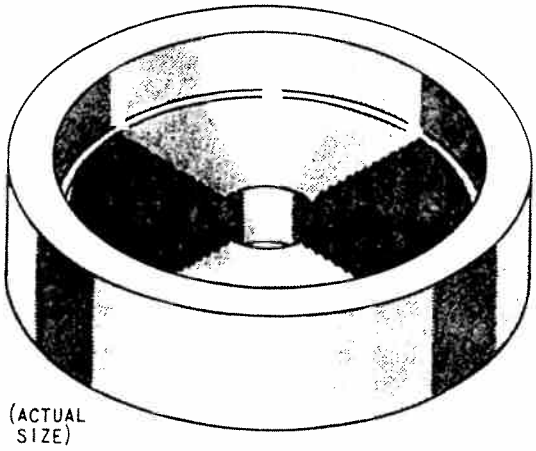

GRP Shear Plate

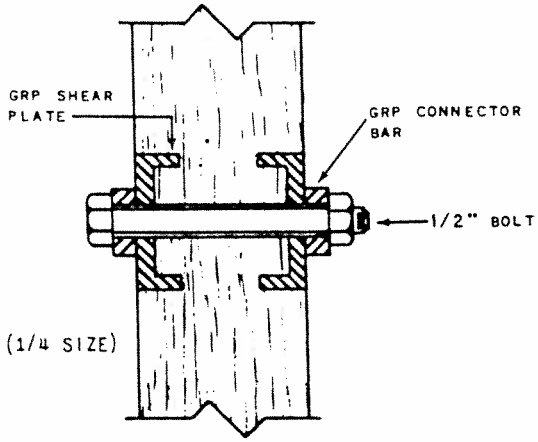

Cross Section thru Shear Plate, Connector and Column

1. ADVANTAGES

At the intersection of a diagonal connector, column and horizontal ties a small triangle is formed by these members. (See picture on page 1.) As horizontal wind loads are carried in the cooling tower story levels by the horizontal ties, this triangle is subjected to rotation. This rotation is resisted by stiffness of columns, diagonals and horizontal ties with each member taking a portion of the total moment, by virtue of its relative stiffness. A couple results in each of these members which imposes a load on the bolts at an angle to the grain. Under certain conditions where the connector crosses the column, the bolt in the wood column does not have capacity to take the load the GRP bar is transmitting. This is where a GRP shear plate is used to transmit load from GRP connector into the bolt; from bolt to GRP shear plate; and finally, from GRP shear plate into the column.

2. MANUFACTURE

The manufacture is similar to the GRP diagonal connector as described above. A pre-mix of chopped glass roving and polyester is placed in a heated matched metal mold and the part formed under heat and pressure.

3. TESTS

GRP shear plates were tested in wooden 4 x 4 columns at General Testing Laboratories, Kansas City, Missouri, on April 10, 1958, to validate established maximum allowable loads. The shear plates were tested for both parallel and perpendicular to grain loading in the wood. The failure loads indicated safety factors comparable with similar metal timber connectors. In all the specimens loaded parallel to the grain, the shear plate did not break until after ultimate load had been reached and the wood member had failed. There was no failure of shear plates when the specimens were loaded perpendicular to the grain.

4. QUALITY CONTROL

A visual and dimensional inspection is made similar to the diagonal connector inspection.

MARLEY GLASS REINFORCED POLYESTER CASING DETAIL

Standard corrugated glass reinforced polyester casing on Marley Industrial towers provides these advantages: It is waterproof, fire resistant, corrosion proof and corrugations offer added structural strength. GRP casing is not subject to biological deterioration and requires no maintenance. It gives towers a modern appearance compatible with buildings and other equipment. Formed glass reinforced polyester corner rolls serve as moisture seals and lend completeness to the structure.

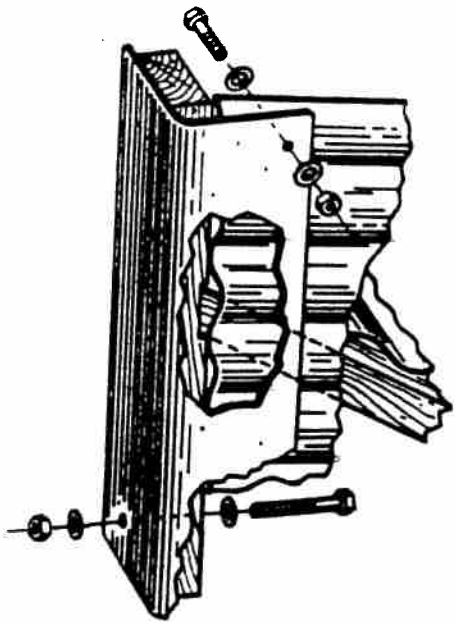

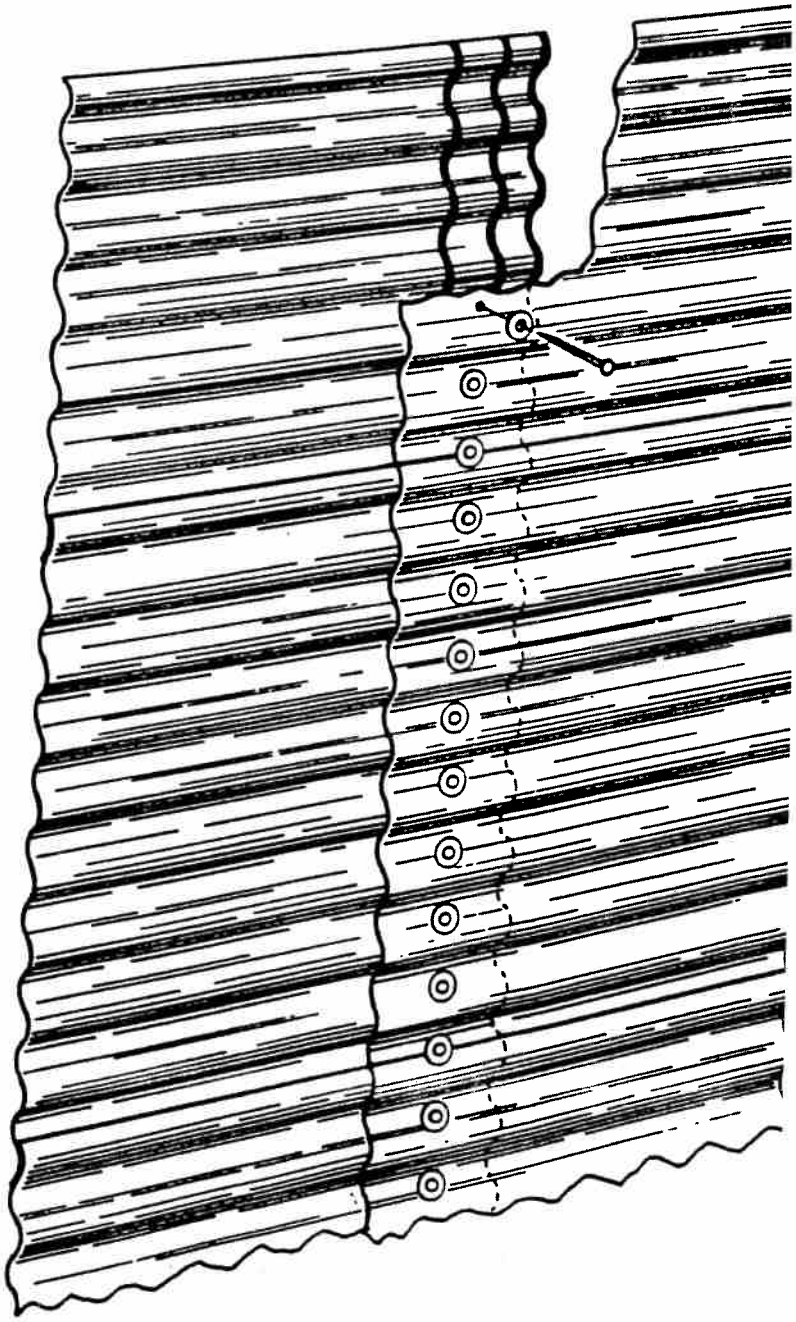

NS5A & NS6 NOZZLES

These Marley patented nozzles, designed exclusively for cooling tower use, offer these benefits:

- NON-CLOGGING — The orifice sizes (1"-3½") are large enough that many competitive nozles will actually fit inside a Marley nozzle. Marley counterflow nozzles have no internal parts or narrow passageways. The attached diffusion ring will not retain even fibrous debris.

- CORROSION-RESISTANT — Inert polypropylene construction, won't corrode or decay in the most severe water conditions.

- EASY TO INSTALL — Nozzles simply screw into adapter pipes and lock in place. They can be removed and reinstalled without tools. The diffusion ring snaps into place.

- RELIABLE THERMAL PERFORMANCE — "Full cone" distribution pattern assures uniform water distribution for all film fills. Minimal spray overlap is required, providing uniform water distribution even near spray boundaries. Marley counterflow nozzles develop uniform water distribution over a wide range of operating water pressures.

MARLEY®

NS5A & NS6 NOZZLES

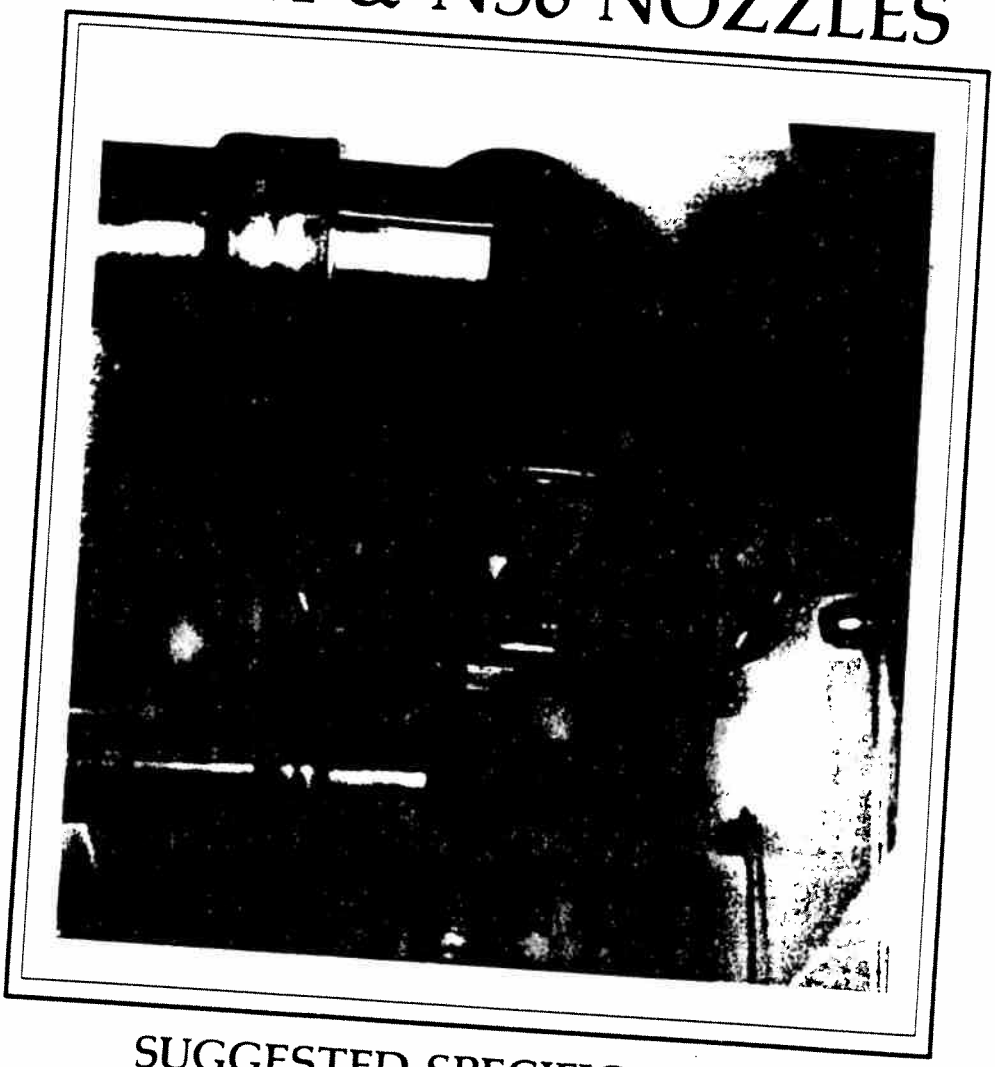

SUGGESTED SPECIFICATION:

Nozzles will be used for water distribution on counterflow cooling tower(s).

Construction:

Each nozzle must be a single assembly with no moving parts. Each nozzle must incorporate an attached diffusion ring to assure proper break-up and dispersion of water.

All internal passages and orifices must be one inch diameter (minimum) to prevent clogging. Internal turbulators are not acceptable.

Materials:

The nozzles must be injection-molded polypropylene. The diffusion ring must be a fiberglass filled or fiberglass coupled polypropylene.

Operation:

The nozzles must develop a "full cone" pattern at pressures as low as two feet of water. The spray system must be a downspray type, with the nozzles at the lowest point in the system. Upspray nozzles are not acceptable.

Installation:

The nozzles must attach to their supply pipe or adapter by means of screwed connections. Each nozzle must incorporate a locking device to assure a rigid connection to the supply pipe or adapter. Each nozzle must be readily removeable and replaceable without the use of tools or adhesives.

MARLEY

The Marley Cooling Tower Company
5800 Foxridge Drive
Mission, KS 66202
913/362-1818

CONSTRUCTION RELEASE

ORDER NO. 12-425-89

The Marley Cooling Tower Company
5800 Foxridge Drive
Mission, Kansas 66202

Gentlemen:

All construction work in connection with the cooling tower has been inspected and found satisfactory. Your erector, Mr. GARY BARBER, has satisfactorily disposed of all rubbish and debris on the premises caused by his work. He has properly cleaned the interior of the cooling tower so as to avoid clogging the outlet piping and has left all physical property connected with his work in as good a condition as he found it.

FIRM NAME Asea Brown Boveri

BY Paul Dalin

TITLE Quality Control Engineer

DATE 8/18/89

NOTE: The signing of this release does not relieve the contractor of its responsibility in connection with material quality, workmanship and tower performance as covered by the Warranty.

8-18-89

Mr. Barber has performed in a very professional manner on this project and it was a real pleasure working with him. This caliber of people makes our jobs just a little more pleasant.

Thank You
Jay Building

Attn:
Chuck Barnes

3 Pages

MATERIAL SAFETY DATA SHEET
Meets Requirements of OSHA's
29 CFR 1910.1200

Revised 6/90
HTWP 014

SECTION I

Hoover Treated Wood Products
P.O. Box 746
Thomson, Georgia 30824

Emergency Number: (404) 595-5058
Chemtrek: 1-800-424-9300

SECTION II - Hazardous Ingredients/Identity Information

Material or Component (Chemical Identity, Common Names):
Chromated Copper Arsenate - CCA Treated Wood

Ingredients:		%	TLV (TWA)	PEL/TWA:
Arsenic	(as As2 O5)	.24 - 2.4	200 ug (As)/m3	100g(AS)/m3
Chromium	(as Cr O3)	.36 - 3.6	.05 mg/m3	.5(Cr)mg/m3
Copper	(as CuO)	.14 - 1.4	.5 mg/m3	.1(Cu)mg/m3
P-103 MX	Proprietary	< .1	Not established	

PEL for Wood Dust:
5 mg/m3

SECTION III - Physical/Chemical Characteristics

Boiling Point:
N/A

Specific Gravity (H2O=1):
.51 to .59

Vapor Pressure (mm Hg.):
N/A

Melting Point:
N/A

Vapor Density (Air=1):
N/A

Evaporation Rate:
(Butyl Acetate=1) N/A

Solubility in Water:
Non-leachable

Appearance and Odor:
Wood, green in color; no odor.

SECTION IV - Fire and Explosion Hazard Data

Flash Point (Method Used):
500-500 F

Flammable Limits: N/A

LEL	UEL
N/A	N/A

Explosive Limits in Air for Wood Dust Only:
40 grams/m3 (LEL)

Extinguishing Media:
Carbon dioxide, water spray, foam or dry chemical.

Special Firefighting Procedures:
Use self-contained breathing apparatus to protect against inhalation of combustion products.

Unusual Fire and Explosion Hazards:
Emits toxic fumes under fire conditions.

SECTION V - Reactivity Data

Stability:
Stable

Conditions to Avoid:

Incompatability (Materials to Avoid):
Strong oxidizing agents.

Hazardous Decomposition or Byproducts:
Emits toxic fumes under fire conditions.

Hazardous Polymerization:
Will not occur.

SECTION VI - Health Hazard Data

Health Hazards (Acute and Chronic):
This material is not expected to be a primary eye or skin irritant when it has been dried following treatment or when one week has elapsed following treatment.

Carcinogenicity:
The treating solution contains a suspect carcinogen (<1%) but the treated wood is safe to use because the solution is tied up in the cells of the material, and is non-leachable. Wood dust is a Group II B suspect carcinogen.

Signs and Symptoms of Exposure:
Sawdust may irritate skin on some sensitive persons.

Medical Conditions Generally Aggravated by Exposure:
None known.

Emergency and First Aid Procedures:
Wash with soap and water after handling, practice good hygiene. If ingested, seek medical attention.

SECTION VII - Precautions for Safe Handling and Use

Steps to Be Taken in Case Material is Released or Spilled:
Good housekeeping techniques.

Waste Disposal Method:
Dispose of in an approved landfill. Do not burn waste because oxides or carbon, arsenic, copper, and chromium are released and they may be harmful. Ash contains toxic material.

Precautions to Be Taken in Handling and Storing:
Good housekeeping techniques.

SECTION VII - Control Measures

Respiratory Protection (Specify Type):
3-M Brand Dust/Mist Respirator #8710 (or equivalent) when sawing or machining.

Ventilation:
Local Exhaust

Protective Gloves:
Work gloves to avoid splinters.

Eye Protection:
Safety glasses with side shields or goggles to avoid splinters or sawdust.

Other Protective Clothing or Equipment:
N/A

Work/Hygienic Practices:
Practice good hygiene, launder clothing before reuse. Wash hands before eating or using tobacco products.

INSTRUCTION MANUAL

FOR

BYRON JACKSON

VERTICAL CIRCULATOR PUMPS

PRELIMINARY
NOT TO BE USED FOR CONSTRUCTION

FOREWORD

This manual provides installation, operation and maintenance instructions for the Byron Jackson Vertical Circulator (VCT) pump(s) described in Section One.

This manual outlines the general procedures that must be observed to ensure long, trouble free service. However, it is assumed that plant personnel are familiar with the basic principles and tools involved in the installation, care and service of a pump. Successful operation is dependent on careful study of the manual and a well-planned maintenance program.

Should questions arise which are not specifically covered in this manual, please contact the nearest Byron Jackson office or the dealer through whom the unit was purchased for additional information. All inquiries should identify the applicable pump by type, size and serial number as given on the pump nameplate.

PRELIMINARY
NOT TO BE USED FOR CONSTRUCTION

TABLE OF CONTENTS

NUMBER	TITLE	PAGE
SECTION ONE	PUMP DESCRIPTION	1-1
1.1	General	1-1
1.2	Design Data and Operating Conditions	1-1
1.3	Bowl Assembly	1-1
1.4	Column Assembly	1-2
1.5	Discharge Head Assembly	1-2
1.6	Auxiliary Equipment	1-3
1.7	Lubrication	1-3
SECTION TWO	INSTALLATION	2-1
2.1	General	2-1
2.2	Shipping Arrangements	2-1
2.3	Equipment Required	2-1
2.4	Pump Handling Instructions	2-2
2.5	Unloading and Checking the Pump	2-3
2.6	Temporary Storage	2-4
2.7	Install Pump	2-4
2.8	Grout the Pump	2-5
2.9	Install Driver and Align Equipment	2-6
2.10	Connect Main Piping	2-8
2.11	Install Pressure Gages	2-9
2.12	Install Auxiliary Instruments, Piping and Wiring	2-9
2.13	Assemble Coupling and Adjust Impeller	2-9
2.14	Install and Adjust Packing	2-10
2.15	Removal of Unit	2-11
2.16	Preparation for Storage or Shipment	2-11

TABLE OF CONTENTS (CONTINUED)

NUMBER	TITLE	PAGE
SECTION THREE	OPERATION	3-1
3.1	Operating Precautions	3-1
3.2	Preliminary Check	3-1
3.3	Starting	3-2
3.4	Operating Check	3-2
3.5	Stopping	3-2
SECTION FOUR	MAINTENANCE	4-1
4.1	General	4-1
4.2	Preventive Maintenance	4-1
4.3	Troubleshooting Chart	4-3
4.4	Pump Disassembly	4-5
4.5	Cleaning and Inspection	
4.6	Pump Reassembly	
SECTION FIVE	SPARE PARTS	5-1
5.1	Recommended Spare Parts	5-1
5.2	Ordering Spare Parts	5-1
5.3	Storage of Spare Parts	5-2
SECTION SIX	REFERENCE MATERIALS	6-1
6.1	List of Reference Materials	6-1

SECTION TWO - INSTALLATION

2.1 GENERAL

Pump installation includes unloading and checking the equipment, preparing the foundation, installing and grouting the pump, installing the driver, connecting the piping and instruments, adjusting the impeller, and installing or setting the shaft seal. When installing the pump, refer to the Pump Outline Drawing contained in Section Six.

The unit should be installed only by experienced personnel, with care taken to handle equipment safely and to prevent entry of foreign materials into the working parts of the pump.

It is recommended that the services of a Byron Jackson Installation Supervisor be employed for the installation and initial starting of a Byron Jackson pump. Such service will ensure the purchaser that the equipment is properly installed, and will provide an excellent opportunity for the plant operator to receive special instructions relative to the unit.

2.2 SHIPPING ARRANGEMENTS

Vertical circulator pumps are shipped from the factory assembled if pump size permits. Unusually large pumps and pumps having rubber composition bearings are shipped in subassembly condition. Normally, the foundation plate is shipped bolted to the discharge head. All parts are suitably protective wrapped and crated or mounted on skids as appropriate. The driver may ship by separate carrier.

2.3 EQUIPMENT REQUIRED

In addition to common millwright tools used in this type of work, the following should be available at the job site when installing or removing the pump:

NOTE: These items are not provided by Byron Jackson unless specifically ordered.

1. A crane or derrick. Lifting equipment must be of sufficient strength to lift the entire pump (without driver) safely, and must be of sufficient height to provide ample clearance for the longest of the pump or column sections.

2. Shackles (clevis-and-pin type adapters), suitably sized, for attaching lifting lines to equipment lifting lugs.

3. Lifting eye bolts with washers and nuts, for handling pump sections when lifting lugs are not provided.

4. I-beams or H-beams, for supporting pump subassemblies at foundation when it is necessary to install or remove the pump in sections.

5. A lifting eye bolt, for handling a section of shaft separately. Each shaft has a tapped hole at each end to receive a lifting eye bolt.

6. Steel blocks and wedges or shim packs (one per foundation bolt) of 2" minimum thickness, for leveling pump assembly. Alternatively (or in addition), leveling nuts can be used on foundation anchor bolts, below the foundation plate.

7. Grout mix, non-shrink type. Also, sufficient lumber for building a wooden trough to contain grout, and sufficient oil paint for grout protective covering.

8. A set of tools for installing and removing stuffing box packing and cage ring, including a hooked puller, a cage ring puller, and suitably sized spacer rings with handles.

2.4 PUMP HANDLING INSTRUCTIONS

NOTE: The approximate weights of the major pump components are listed on the Pump Outline Drawing in Section Six.

2.4.1 Handling Precautions

1. When handling the pump or its components, always work carefully to prevent accidents.

2. Be sure lifting devices used are in good repair and are capable of safely handling the weights being lifted.

3. Adjust lifting equipment so that the load hook is directly over the foundation axis. Watch for overhead obstructions.

4. Use care to prevent bumping, pushing or scraping of pump parts, especially the shafts and other machined surfaces and fits.

5. Prevent foreign materials or dirt from entering the working parts of the pump or driver.

6. Note that driver lifting points are designed for lifting the driver only.

2.6 TEMPORARY STORAGE

If pump is to be stored for some time prior to installation, replace any protective covers or wrappings removed during inspection and recrate the equipment. Store equipment in a dry and protected location, and keep pump free of dirt and grit both internally and externally.

The flange covers used should be kept tight and renewed if damaged; do not remove these covers until ready to connect the pump to the system piping.

Shafts, bearings, and other finished parts subject to attack by moisture should be inspected occasionally, and the protective coating renewed if necessary.

2.7 INSTALL PUMP

1. If pump uses one or more seismic supports, refer to the applicable installation instructions contained, if required, in Section Six.

2. If pump is disassembled, assemble the pump as directed in the applicable procedures of Paragraph 4.6.

3. For reinstallation of a previously-installed pump, proceed as follows:

   (a) Thoroughly clean foundation plate top surface and mating pump flange, removing all dirt, burrs and roughness that could interfere with proper placement of the pump.

   (b) Lift and install pump assembly on foundation to mate with foundation plate, and secure the pump-to-foundation-plate lockwashers and stud nuts. Proceed to Paragraph 2.9.

4. For original installation only, proceed as follows:

   (a) Before installing an assembled pump that has been shipped, recheck torquing of threaded fasteners as described elsewhere in this manual.

   (b) Check that foundation plate is assembled to pump; if detached, inspect foundation plate for any interference that could prevent accurate leveling of the pump and assemble foundation plate to pump.

2.4.2 Lifting Methods

It is important to handle the pump components safely during installation and maintenance. The following procedures are suggested:

Unit as shipped - The pump assembly as shipped can be handled using a crane with padded slings. Crated assemblies can be handled with a fork lift of suitable capacity.

Bowl assembly and columns - Use lifting lugs when provided. Otherwise, install eye bolts with washers and nuts in the flange bolt holes, with lifting lines attached to the eye bolts. When using this method, use care to prevent damage to the flange sealing faces.

Shafts - Each section of shaft is threaded at each end to receive a lifting eye bolt. When raising shaft from a horizontal position, avoid dragging of shaft lower end.

Discharge head - Use lifting lugs provided on the discharge head. The lifting lugs on the discharge head are sufficiently strong to handle the entire pump assembly with driver removed. Do not lift discharge head or pump assembly with driver attached.

Driver - Handle driver in accordance with the manufacturer's instructions; normally, lifting lugs are provided. Do not lift driver when assembled to pump, as driver lifting points are designed for lifting the driver only.

2.5 UNLOADING AND CHECKING THE PUMP

1. Before handling equipment, review the procedures of Paragraph 2.4. Work safely to prevent accidents.

2. After unloading, uncrate and/or unwrap all parts and inspect carefully to be certain nothing was damaged during shipment. Check driver carefully to be sure there are no signs of oil leakage.

3. Inspect shipment against materials list or shipping papers to check for possible shortages.

4. If damage or shortage has occured, immediately advise the carrier's claim department and the nearest Byron Jackson office.

(c) To prepare for grouting, lift pump as required to clean underside of foundation plate, ensuring that surface is free of all dirt, oil, grease or other foreign matter. Rough up the foundation in the area that will fit with the foundation plate to assure a good grout bond.

(d) Provide for each foundation anchor bolt a steel block or wedge of 2" minimum thickness. Lift the pump assembly sufficiently to place one block next to each foundation bolt, lower the pump assembly to rest on the blocks, then shim as necessary to level the pump within the recommended tolerance of .002" per linear foot using top face of driver mount surface for reference.

NOTES: (1) As an alternative to using steel block or wedge supports, the pump may be supported and leveled using nuts placed on foundation bolts below the foundation plate.

(2) For some large pumps, it is advisable to place additional supports midway between the foundation bolts.

(e) With pump accurately leveled, install foundation fasteners and secure them evenly and firmly (but not tight), being certain pump remains level within the recommended tolerance.

2.8 GROUT THE PUMP

A good grout job is essential to a trouble-free installation. It is important that a non-shrink type of grout be used. Ordinary cement, sand and water mixtures tend to shrink as the water evaporates, often leaving the underside of the foundation plate insufficiently supported. It is recommended that grouting be performed by a qualified grouting contractor.

1. Be certain that the unit is level within .002" per linear foot with foundation anchor nuts secured evenly but not tight.

2. Build a wooden trough around the foundation to prevent the grout from spreading toward the pit or away from the pump.

3. Pour the grout, being certain that the grout fills all voids between the foundation plate and the foundation. Allow several hours for the grout to settle, then dress surplus grout on the outside.

4. After the grout has hardened, remove any accessible curbing, wedges or blocks, tighten the foundation anchor nuts to their permanent position, confirm that the pump is level within the recommended tolerance (.002" per linear foot), and apply a good oil paint to prevent air and moisture from coming in contact with the grout.

2.9 INSTALL DRIVER AND ALIGN EQUIPMENT

When installing driver to pump, certain alignment checks should be made to ensure successful operation. Proceed as follows:

NOTE: Refer to the driver manufacturer's instruction manual for additional instructions which may apply.

1. Before mounting the driver, check driver mounting flange dimensions to be certain driver will fit the driver mount surface.

2. Support driver vertically, shaft facing down, and thoroughly clean the shaft and mounting surfaces in preparation for checking alignment.

3. Check trueness of driver mounting face by attaching a dial indicator to the driver shaft, on an extension perpendicular to the shaft centerline, and setting the dial indicator to contact with the driver mounting face. Rotating the shaft while noting readings, check:

   (a) Concentricity of the rabbet fit, which must be within .001" total indicated runout (T.I.R.) per foot of rabbet diameter, and

   (b) Squareness of the mounting face, which must be perpendicular to the shaft within .001" T.I.R. per foot of bolt circle diameter.

4. Check trueness of driver shaft by mounting the dial indicator to the driver housing and setting the dial indicator to contact the shaft. Rotating the shaft to take readings, check:

   (a) Runout of shaft circumference, which must not exceed .003" T.I.R., and

   (b) Squareness of shaft face or split ring groove, which must be parallel to the driver mounting face within .002" T.I.R.

5. If the driver half coupling is not installed, install key in driver shaft keyway and heat up the driver half coupling, which is a light press fit on the shaft, to approximately 250° F, then press the driver half coupling all the way up on driver shaft, insert split ring and pull the driver half coupling down to seat firmlt against the split ring.

   CAUTION: When installing the driver half coupling, heat the piece evenly and do not exceed 300° F maximum. The coupling should install easily when properly heated. If light driving is required, do not pound with steel hammer; use a lead or rawhide mallet or a suitable soft block or drift. When cold, the coupling is a zero fit ± .001".

6. If pump half coupling is not installed, install key(s) in shaft, slide on pump half coupling and thread on adjusting plate.

7. Install driver on pump and temporarily tighten the mounting fasteners

8. Using a dial indicator mounted to the driver half coupling, rotate driver shaft to take readings from the motor mounting flange inside-diameter surface and adjust driver as necessary to center driver shaft within .006" total indicator runout. Tighten driver mounting fasteners.

9. Refer to the driver manufacturer's manual for driver operating instructions. If the driver is presently operable, check driver for proper lubrication, make sure driver-to-pump coupling is disconnected (with adjusting plate screwed all the way down), then connect driver leads to the power source and operate the driver momentarily to check driver shaft for correct rotation. Viewed from the top, the shaft rotates correctly COUNTER-CLOCKWISE. If rotation is incorrect, reverse the driver rotation by interchanging two leads. Correct rotation established, disconnect driver leads at power source and tag the leads with correct terminal idnetification.

.10 CONNECT MAIN PIPING

With the pump grouted and firmly bolted to the foundation, the main piping should then be connected to the pump discharge flange. When installing piping, note the following:

1. Use pipe of ample size for the length of line and the pressure involved. Allow absolute minimum of bends and fittings.

2. Install check valve, followed by gate valve, in discharge line. Check valve prevents back flow in event of power failure, and protects pump from system backpressure. Reducer, if used in discharge line, should be fitted to discharge flange preceding check valve and gate valve.

3. Permit no excessive strain on the pump discharge flange. Pipe strains on the pump can be a definite source of trouble, resulting in possible misalignment, overheated bearings, excessive wear, vibration, and even broken shafts. Although the pump is designed to withstand specified nozzle loads, it is generally advisable to minimize these forces by supporting the piping independently of the pump. Provide hot lines with loops or expansion joints to prevent strains on the pump caused by pipe expansion.

4. Be sure pipe-to-pump flange faces mate flush and parallel with bolt holes in alignment, and eliminate any tendency for the piping to push toward or pull away from the pump. Never force piping into position with flange bolts or use drifts to force alignment of bolt holes.

5. Be certain that piping is thoroughly clean before connecting pump to piping. It is important to prevent welding slag, pipe scale and other foreign materials from entering the pump and causing damage to the pump or the valves and equipment which follow. Provide strainers or screens when required to prevent foreign materials from being drawn into the pump suction inlet.

2.11 INSTALL PRESSURE GAGES

Pressure gages are the most effective direct check on the operation of a centrifugal pump; their use is highly recommended. It is preferable that the discharge gage be placed at least five pipe diameters away from the pump or other fittings such as elbows or valves.

2.12 INSTALL AUXILIARY INSTRUMENTS, PIPING AND WIRING

Install and connect any auxiliary instruments, piping and wiring as indicated on the Pump Outline Drawing in Section Six.

2.13 ASSEMBLE COUPLING AND ADJUST IMPELLER

1. With the coupling adjusting plate screwed onto top pump shaft, insert a steel rod into hole provided in coupling adjusting plate. While holding pump half coupling against turning, rotate adjusting plate until gap between faces of adjusting plate and driver half coupling is a little higher than the impeller lift setting specified in Paragraph 1.2 and on the pump nameplate. Use feeler gages.

2. Turn adjusting plate so bolt holes will line up with nearest bolt holes in the pump half coupling, then rotate the driver shaft to align bolt holes of the driver half coupling with those of the adjusting plate.

3. Insert two of the coupling bolts and tighten progressively until secure, thereby closing the gap above the adjusting plate and raising the impeller(s) to running position.

4. Insert the remaining coupling bolts and tighten all bolts securely.

5. Check for free rotation of driver and pump shaft, with no binding as shafts are rotated by hand. With dial indicator mounted to pump housing, check that pump shaft runout below coupling does not exceed .001" per inch of shaft diameter. Readjust driver if necessary, tighten driver mounting nuts, and recheck for free shaft rotation.

2.14 INSTALL AND ADJUST PACKING

Install and adjust the stuffing box packing as directed in Paragraphs 2.14.1 and 2.14.2. This completes the pump installation.

2.14.1 Packing Installation

1. Refer to Paragraph 1.5 for type, size and number of packing rings required. Be certain that type of packing used is compatible with the product being pumped. Install new packing rings only.

2. Determine that stuffing box and shaft or sleeve are clean and free of damage.

   NOTE: When installing packing rings, stagger the joints 90° from each other as shown in Figure 2-1. The cage ring is positioned as shown on the Pump Sectional Drawing in Section Six.

3. (See Figure 2-2.) Insert one ring of packing, pressing by hand to point of maximum entrance.

4. (See Figure 2-3.) Insert spacer ring, with packing tools attached, and press on the packing tool handles to guide and tamp the packing ring solidly and squarely into position.

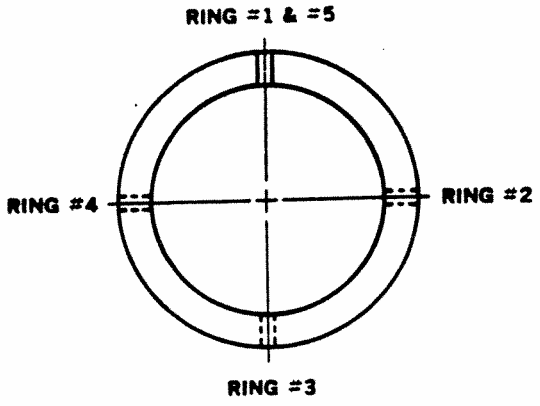

Figure 2-1

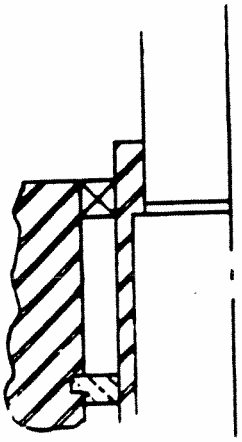

Figure 2-2

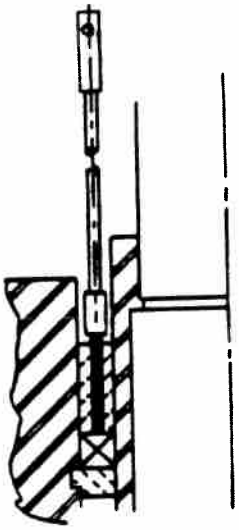

Figure 2-3

5. Retract the packing tools and insert sufficient spacer rings to fill the stuffing box.

6. Install and pull in the split gland, tightening stud nuts evenly and firmly, so that gland does not cock on the shaft. Remove gland and spacer rings.

7. Repeat Steps 3 thru 6 to install each remaining ring of packing.

8. When all rings of packing are installed, loosen the gland stud nuts, then secure stud nuts finger tight.

2.14.2 Adjustment

When a pump is first operated with new packing, the packing should be adjusted loose to allow a continuous stream of water (approximately 1/4" in diameter) to flow from the split gland. While leakage may seem excessive during the initial period of operation, this leakage will decrease as pump and packing approach operating temperature. Therefore, do not operate pump with new packing too tightly adjusted, and do not make final adjustment of gland until pump has been in operation at least 4 to 8 hours.

When pump has been in operation approximately 4 to 8 hours at operating temperature and pressure conditions, tighten the gland stud nuts, evenly and progressively, one flat at a time until the leakage rate is reduced to approximately one to five drops per second. Exercise caution when working near rotating shafts, especially around the coupling. Check the gland temperature and increase the leakage rate if overheating of the packing is suspected. Do not allow less than the recommended rate of leakage, as this will adversely affect the packing and sleeve life. The gland adjustment should be checked at least once a week and re-adjusted as needed.

2.15 REMOVAL OF UNIT

Removal of the unit, when necessary, generally is performed in the reverse order of installation. To remove the unit, proceed as directed in Paragraph 4.4, Pump Disassembly. To prepare the unit for storage or shipping, refer to the following paragraph.

2.16 PREPARATION FOR STORAGE OR SHIPMENT

Unit should be stored or shipped in original as-shipped condition, protected against moisture, dirt and physical damage. Prepare the pump for shipping or storage as follows:

1. Remove auxiliary instruments such as gages and place in a separate container with other loose parts. This container may be stored inside pump if desired.

2. Block the shaft or shafts as necessary to eliminate shaft end float.

3. Coat exposed machined surfaces that are vulnerable to moisture with a suitable protective compound.

4. Ensure pump is thoroughly dry, place desiccant inside unit, install suitable flange covers and plug any smaller openings.

5. Install protective wrapping and crate the unit or mount on skids as appropriate. Support bowl assembly adequately along its length.

6. Store equipment in a dry and protected location, keeping pump free of dirt and grit both internally and externally.

7. During storage, periodically inspect desiccant and other protective materials and renew as necessary.

PARTS LIST

ITEM NO.	REF. NO.	PART NAME		QUANTITY	MATERIALS: COMMON TERM	MATERIALS: SPECIFICATION NO. (1)
1	601	Strainer - Basket		1	316 S.S. - Fab	FAb A-240-5316
2	164	Bearing - Bottom	(3)	1	Bronze	B-584 CA 836
3	086	Suction Bell		1	Cast Iron	A-48 Class 30
4	244	Sand Cap	(3)	1	Bronze	B-584 CA 836
5	795	Lock Screw	(3)	1	18-8	A-193 GR B8
6	226	Thrust Collar		1	Bronze	B-584 CA 836
7	039	Liner - Impeller		1	Cast Iron	A-48 Class 30
8	256	Split Ring - Impeller		1	410 S.S.	A-479 TR. 410
9	176	Impeller		1	Bronze (2)	B-584 CA 836
10	207	Wear Ring - Case	(3)	1	Bronze	B-584 CA 932
11	676	Key - Impeller		1	416 S.S.	A-582 TP. 416 H.T.
12	076	Case - Top		1	Cast Iron (2)	A-48 Class 30
13	243	Bearing - Case	(3)	1	Marine - Rubber	MIL-B-17901A CLII
14	747-1	"O" Ring - Top Case	(3)	1	Nitrile (Buna N)	D2000-2BG720 B14
15	167	Bowl Shaft		1	416 H.T.	A-479 TP. 416 H.T.
16	401	Coupling - Shaft		1	416 H.T.	A-479 TP. 416 H.T.
17	422	Outer Column		1	Fab. Steel	Fab. A-36, A-53
18	403	Shaft - Top Column		1	416 H.T.	A-479 TP. 416 H.T.
19	383	Bearing - Column	(3)	1	Marine - Rubber	MIL-B-1701A CL II
20	747-2	"O" Ring - Column	(3)	1	Nitrile (Buna N)	D2000-2BG720 B14
21	429	Sole Plate		1	Steel	A-36
22	465	Discharge Head		1	Fab. Steel	Fab. A-36, A-53
23	217	Shaft Sleeve	(3)	1	410 H.T.	A-479 TP. 410 H.T.
24	747-3	"O" Ring - Sleeve	(3)	1	Nitrile (Buna N)	D2000-2BG720 B14
25	233	Bearing - Stuff. Box	(3)	1	Marine - Rubber	MIL-B-1790A CLII
26	050	Stuffing Box		1	Cast Iron	A-48 Class 30
27	742	Rings of Packing	(3)	5	-	Garlock 8909
28	236	Cage Ring	(3)	1	Bronze	B-584 CA 836
29	111	Gland		1	Bronze	B-584 CA 836
30	676-2	Key - Coupling		1	416 S.S.	A-582 TP. 416 H.T.
31	530	Coupling - Pump Half		1	Steel - Zinc Plate	A-576 GR. 1010
32	532	Adjusting Plate		1	Steel - Zinc Plate	A-576 GR. 1010
33	529	Coupling - Drive Half		1	Steel - Zinc Plate	A-576 GR. 1010
34	747-4	"O" Ring - Stuffing Box	(3)	1	Nitrile (Buna N)	D2000-2BG720 B14
35	334	Retaining Ring	(3)	1	302 S.S.	302 S.S.
36	678	Gib Key	(3)	1	416 S.S.	A-582 TP. 416 H.T.
37	256-1	Split Ring - Mtr. Shaft		1	Steel	A-576 GR. 1025

NOTES:

(1) Unless state otherwise all specifications numbers listed are of ASTM designations.
Unless stated otherwise a blanket letter of compliance will be furnished for all materials supplied.

(2) Actual mill certificates, chemicals and physicals, to be furnished.

(3) Recommended spare parts for normal operation.

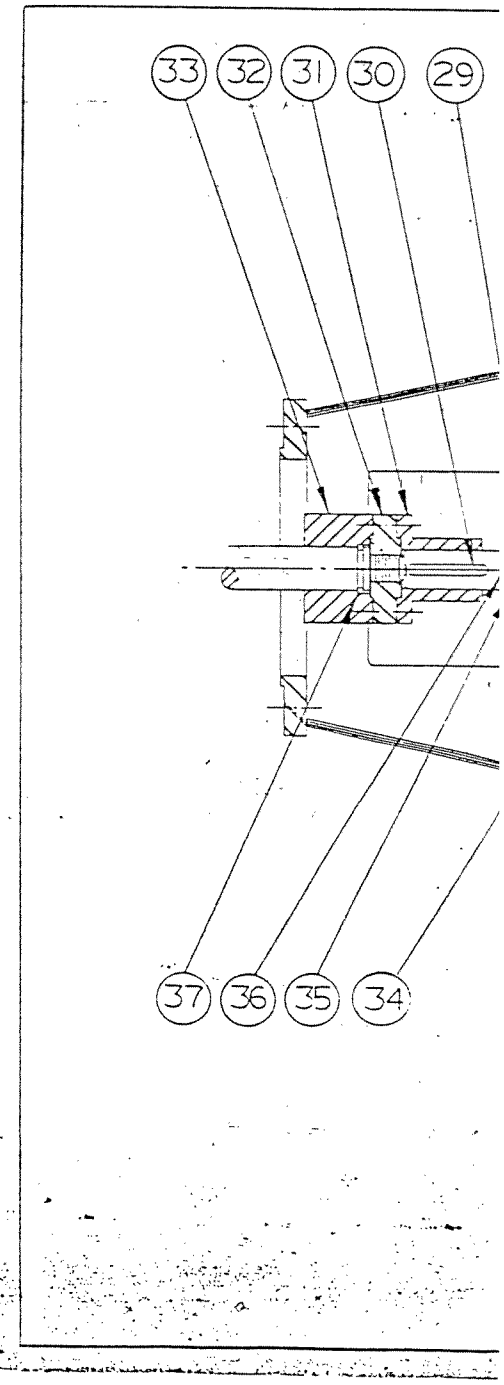

ARTS LIST

QUANTITY	MATERIALS COMMON TERM	SPECIFICATION NO. (1)
1	316 S.S. - Fab	FAB A-240-5316
(3) 1	Bronze	B-584 CA 836
1	Cast Iron	A-48 Class 30
(3) 1	Bronze	B-584 CA 836
(3) 1	18-8	A-193 GR B8
1	Bronze	B-584 CA 836
1	Cast Iron	A-48 Class 30
1	410 S.S.	A-479 TR. 410
1	Bronze (2)	B-584 CA 836
(3) 1	Bronze	B-584 CA 932
1	416 S.S.	A-582 TP. 416 H.T.
1	Cast Iron (2)	A-48 Class 30
(3) 1	Marine - Rubber	MIL-B-17901A CLII
(3) 1	Nitrile (Buna N)	D2000-2BG720 B14
1	416 H.T.	A-479 TP. 416 H.T.
1	416 H.T.	A-479 TP. 416 H.T.
1	Fab. Steel	Fab. A-36, A-53
1	416 H.T.	A-479 TP. 416 H.T.
(3) 1	Marine - Rubber	MIL-B-1701A CL II
(3) 1	Nitrile (Buna N)	D2000-2BG720 B14
1	Steel	A-36
1	Fab. Steel	Fab. A-36, A-53
(3) 1	410 H.T.	A-479 TP. 410 H.T.
(3) 1	Nitrile (Buna N)	D2000-2BG720 B14
(3) 1	Marine - Rubber	MIL-B-1790A CLII
1	Cast Iron	A-48 Class 30
(3) 5	-	Garlock 8909
(3) 1	Bronze	B-584 CA 836
1	Bronze	B-584 CA 836
1	416 S.S.	A-582 TP. 416 H.T.
1	Steel - Zinc Plate	A-576 GR. 1010
1	Steel - Zinc Plate	A-576 GR. 1010
1	Steel - Zinc Plate	A-576 GR. 1010
(3) 1	Nitrile (Buna N)	D2000-2BG720 B14
(3) 1	302 S.S.	302 S.S.
(3) 1	416 S.S.	A-582 TP. 416 H.T.
1	Steel	A-576 GR. 1025

s listed are of ASTM designations.
liance will be furnished for all materials supplied.
s, to be furnished.

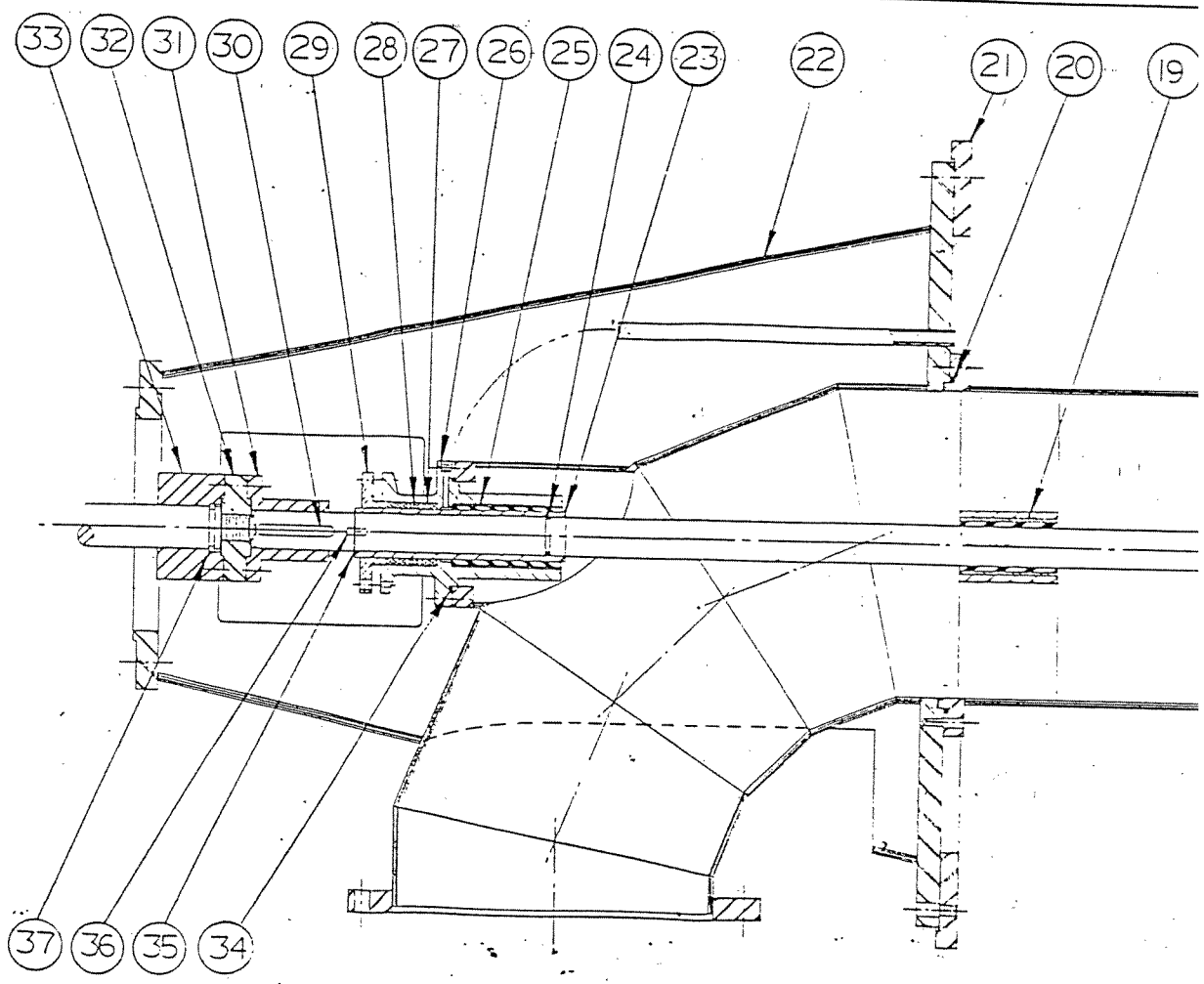

LTR	REV. BY	DESCRIPTION
Ø		ORIGINAL ISSUE

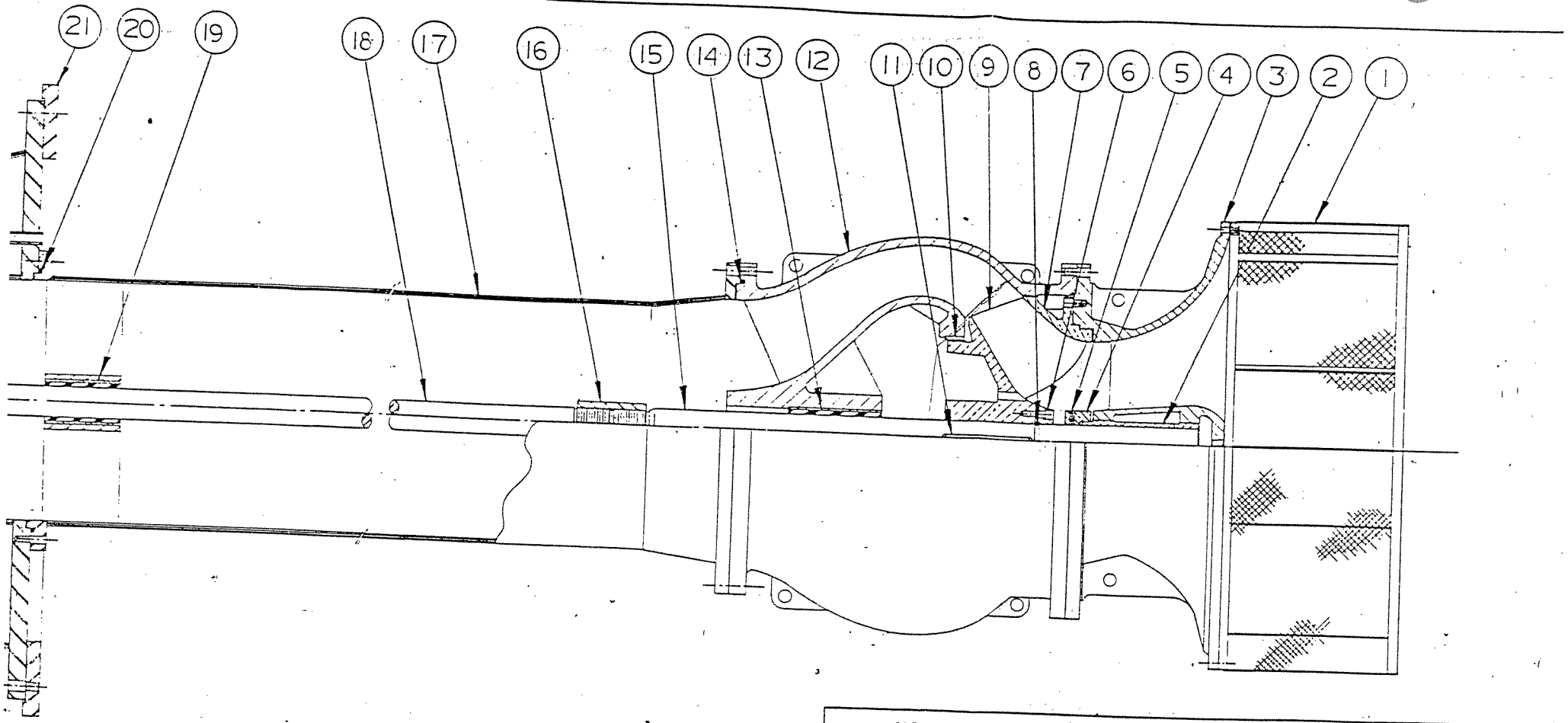

HOPEWELL COGENERATION LIMITED PARTNERSHIP
COGENERATION FACILITY
HOPEWELL, VIRGINIA

DRWG NO SFF-0068

ABB
ASEA BROWN BOVERI

REVISIONS

DESCRIPTION	DATE	CHK'D	APPROVED MET	APPROVED ENG	APPROVED Q.A.
ORIGINAL ISSUE					

ALL LIMITS OF CONCENTRICITY AND SQUARENESS OF FACES SUBJECT TO BYRON JACKSON INSPECTION STANDARDS PER E. M. SECTION D1-1

UNLESS TOLERANCE IS GIVEN MACHINE TO WITHIN

DIAMETERS	LENGTH
BORE - 1/64	0 TO 2 FT. - 1/64
TURN - 1/64	2 TO 6 FT. - 1/32
	6 FT. AND OVER - 1/16

THIS MATERIAL IS THE PROPERTY OF BORG WARNER CORPORATION AND IS FURNISHED ONLY FOR THE PURPOSE INDICATED HEREIN AND ALL CONFIDENTIAL, PROPRIETARY, PATENT AND OTHER RIGHTS IN THE SUBJECT BORG WARNER RETAINED INCLUDING ANY EXCLUSIVE RIGHTS OF USE AND/OR MANUFACTURE WITHOUT PRIOR PERMISSION OF THIS MATERIAL DOES NOT CONVEY OR TRANSFER TO RECEIVER THIS MATERIAL IN WHOLE OR IN PART, OR MANUFACTURE THE SUBJECT MATTER (INCLUDING TRADE, OR USE THE CONFIDENTIAL OR PROPRIETARY INFORMATION THEREON. SUCH PERMISSIONS TO BE GRANTED ONLY BY SPECIFIC AUTHORIZATION IN WRITING SIGNED BY AN OFFICER OF OTHER AUTHORIZED AGENT OF BORG WARNER CORPORATION, ITS DIVISIONS OR SUBSIDIARIES

UNLESS OTHERWISE SPECIFIED
DIMENSIONS ARE IN INCHES
TOLERANCES ON
DECIMALS .XX ± .XXX ± .XXXX ±
ANGLES ± ALL THREADS CLASS 2 PER B1.1

SURFACE ROUGHNESS PER ANSI B 46.1

DRILLED HOLES ✓ AS DRILLED
TAPPED HOLES ✓ AS TAPPED

DO NOT SCALE DRAWING
REMOVE ALL BURRS AND SHARP EDGES EQUIVALENT TO .005 R
ALL MACH CORNERS/FILLETS .010/.030 R

BJ ORDER NO 281-W-0544
DRAWN BY G LINFOOT
CHECKED BY
OK'D FOR MFG BY
TITLE
CUSTOMER APPR.
REF NO
DATE
DATE
DATE

BORG WARNER
BYRON JACKSON®
BORG-WARNER CORPORATION

DRAWING TITLE
MAIN COOLING WATER PUMP
MODEL 48RXL-1 STAGE

CONTRACT NO.
CODE IDENT NO.
DRAWING NO. SFF-0068
SCALE
WEIGHT
SHEET

BBC
BROWN BOVERI

Large Surface Condensers

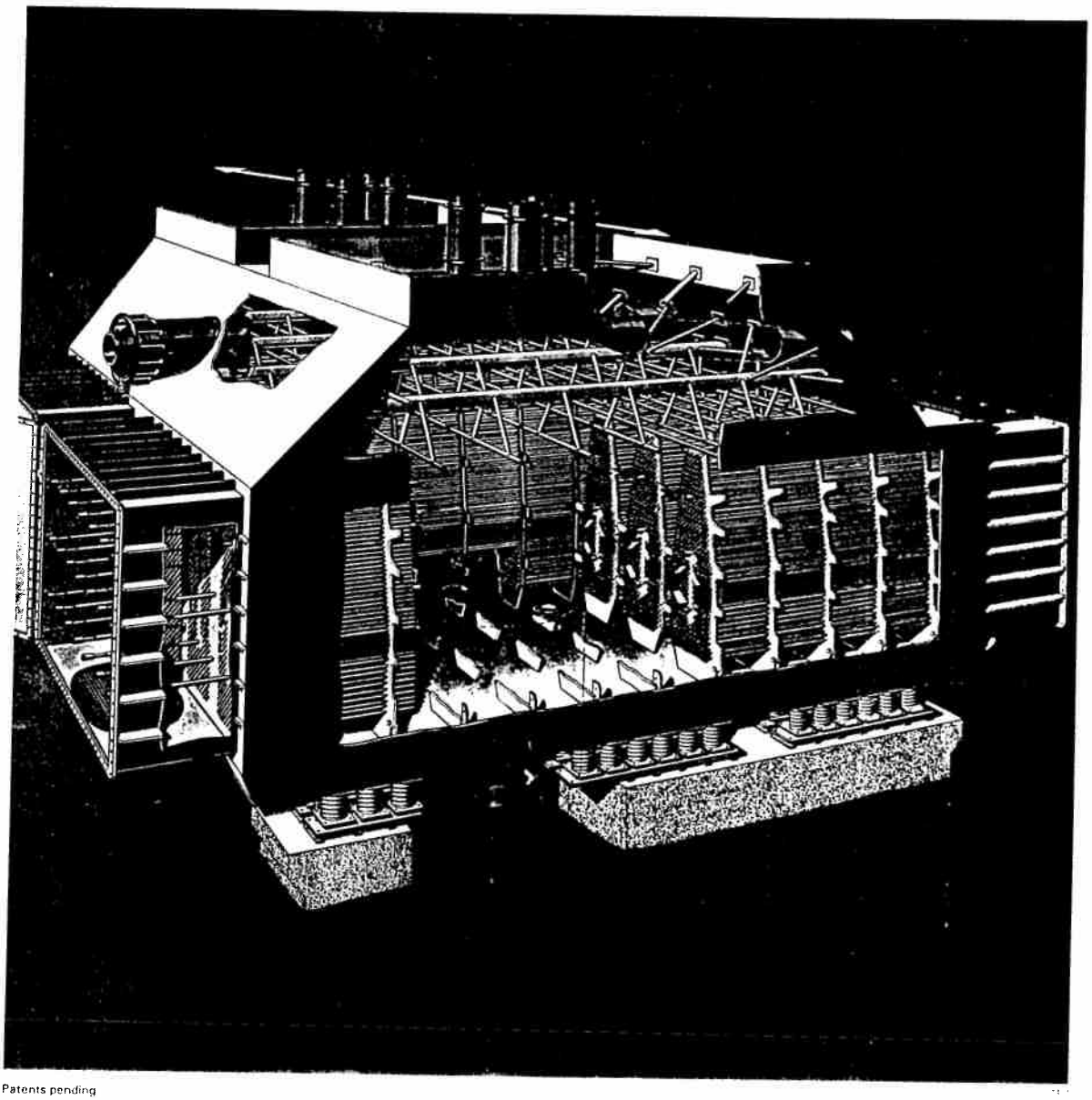

Patents pending

Copyright © by
BBC Brown, Boveri & Company, Limited
Baden/Switzerland

Reprinting [illegible] in whole or in part [illegible] of illustrations is permitted, whereby the [illegible] designation must be stated in full

HTDM N01 001 E
A 1

BROWN BOVERI

' ırge Surface Condensers

Design

BBC large condensers are tube-type heat exchangers of modular design. A number of tube bundles, each resembling a church window in shape, are built into mostly a single housing (Figs. 1–3). The bundle was configured on the basis of comprehensive tests with analogous models.

Main Elements and Function

The steam flow from the turbine or the turbine bypass condenses on the outer surface of the straight cooling tubes, while the cooling water flows through the tubes in one or two passes. The **tube bundles** have an optimum aerodynamic configuration. They ensure good steam admission, as small steamside pressure losses as possible and good venting, and they avoid subcooling of the condensed steam (Fig. 1). By a combination of these features an extremely high overall heat transfer coefficient is achieved. A BBC overall heat-transfer coefficient standard was developed on the basis of theoretical considerations and checked in plants by measurement. This standard takes into account all relevant influencing factors.

ɜ connection between turbine and condenser, the **ıdenser neck**, is configured according to comprehensive investigations of the flow conditions.

At both ends the **tubes** are roller-expanded into the tubesheets, which are welded to the rectangular condenser shell. The tube material is selected according to various criteria, especially resistance to corrosion and erosion, and on the basis of many years of experience in condenser construction.

If titanium or stainless steel tubes are used, the tubes can also be welded to the tubesheets.

The **waterboxes** have been designed for small pressure losses on the basis of model tests. The circulating water is distributed optimally to the tubes.

Each inlet and outlet waterbox is divided into 2 or more chambers. For tubing, one waterbox can be opened completely. With aggressive cooling water the tubesheets are cladded on the water side with a resistant material to protect against corrosion, and the remaining inside surfaces of the waterboxes are protected with a special coating. Built-in sacrificial anodes provide electrolytic protection.

The condenser is either **mounted** on springs on the foundation bedplate or suspended on the turbine without supports. A rigid connection between condenser and bedplate is also possible.

The steam condensate is collected in the **hotwell**, a cylindrical container welded to the condenser floor. The hotwell can also be integrated in the condenser shell, in which case it extends across the entire condenser floor.

In every bundle the incondensible gases are exhausted at precisely defined points of lowest pressure – the air coolers.

The condensers can be transported to the erection site as prefabricated, tubed modules or single parts as per Fig. 4 and there assembled.

Inspection and Maintenance

The **maintenance** of condensers is limited essentially to the circulating water side. Tube fouling can be kept at a minimum with full automatic tube cleaning systems. Various access openings into the waterboxes and the steam space are provided for periodic **inspections**. These openings assure quick and safe access to the interior.

Fig. 1 Steam flow, isobaric contours
Fig. 2 Works assembly of a "multi-bundle" condenser
Fig. 3 BBC condenser for 1000 MW BWR plant

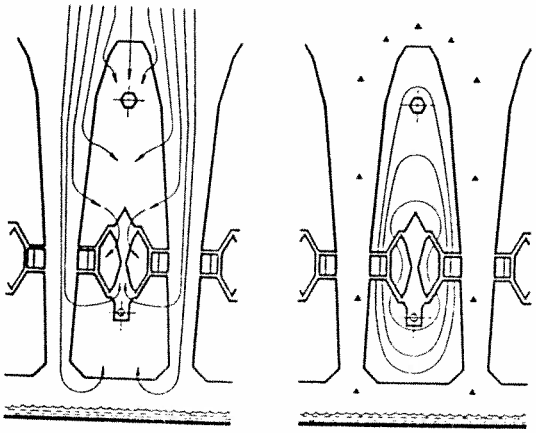

Fig. 1

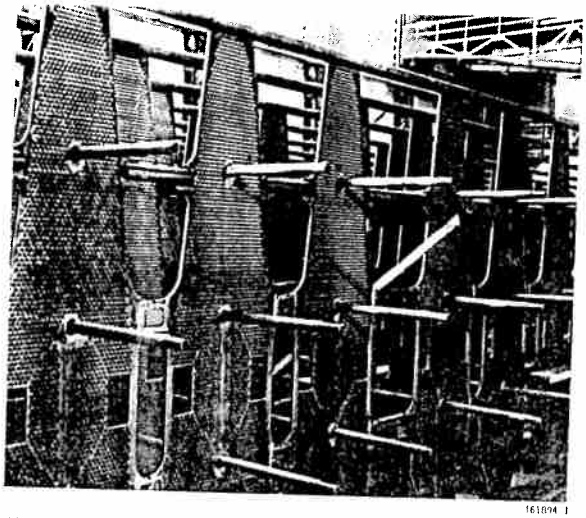

Fig. 2

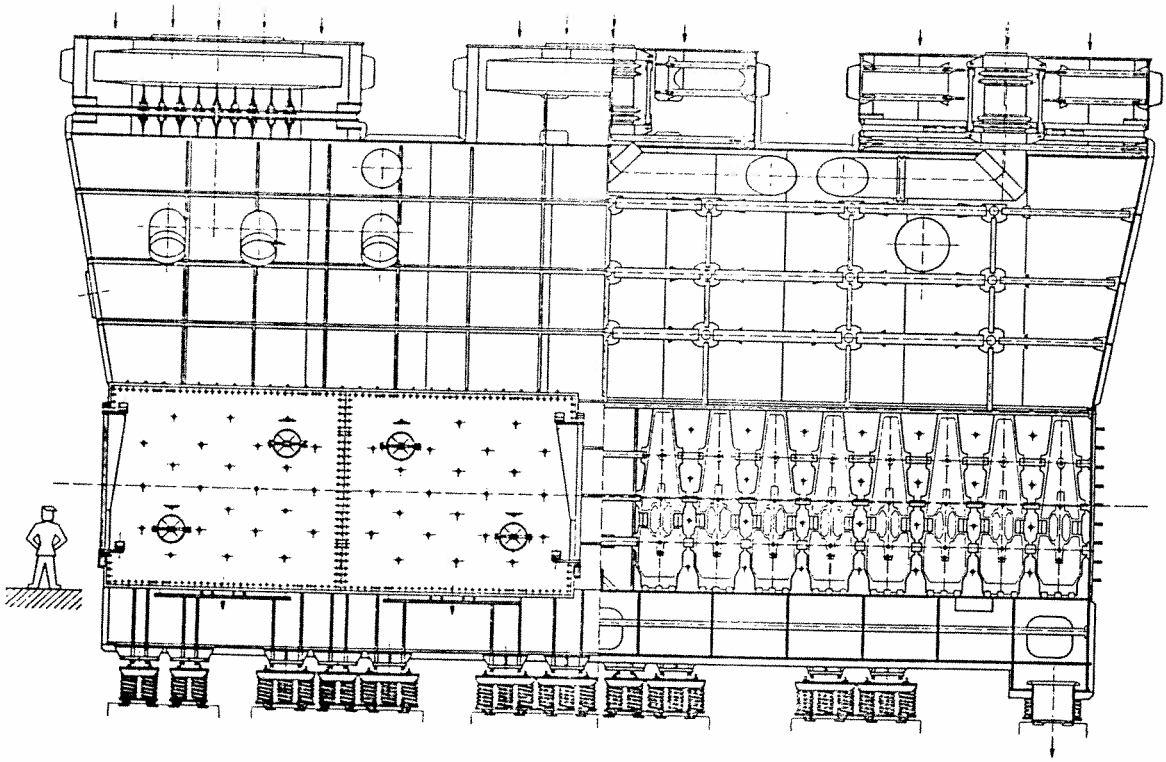

Fig. 3

Principal Features

- High overall heat transfer coefficient for the smallest to the largest units
- Good tube bundle venting
- No danger of ammonia corrosion with copper-alloy tubes
- No subcooling of the condensate and low O_2 content
- Good make-up water deaeration
- Good flow conditions in the condenser throat
- Uniform steam loading on steam dumping and with a part of the circulating water pumps shut down
- High condenser tightness, steam and water side
- Low circulating water side pressure losses and homogeneous flow through the tubes
- Monitoring and inspection of the tubes also possible during operation
- Good accessibility for inspections
- Since 1967 more than 160 large condensers have been ordered, of which more than 100 are in operation.

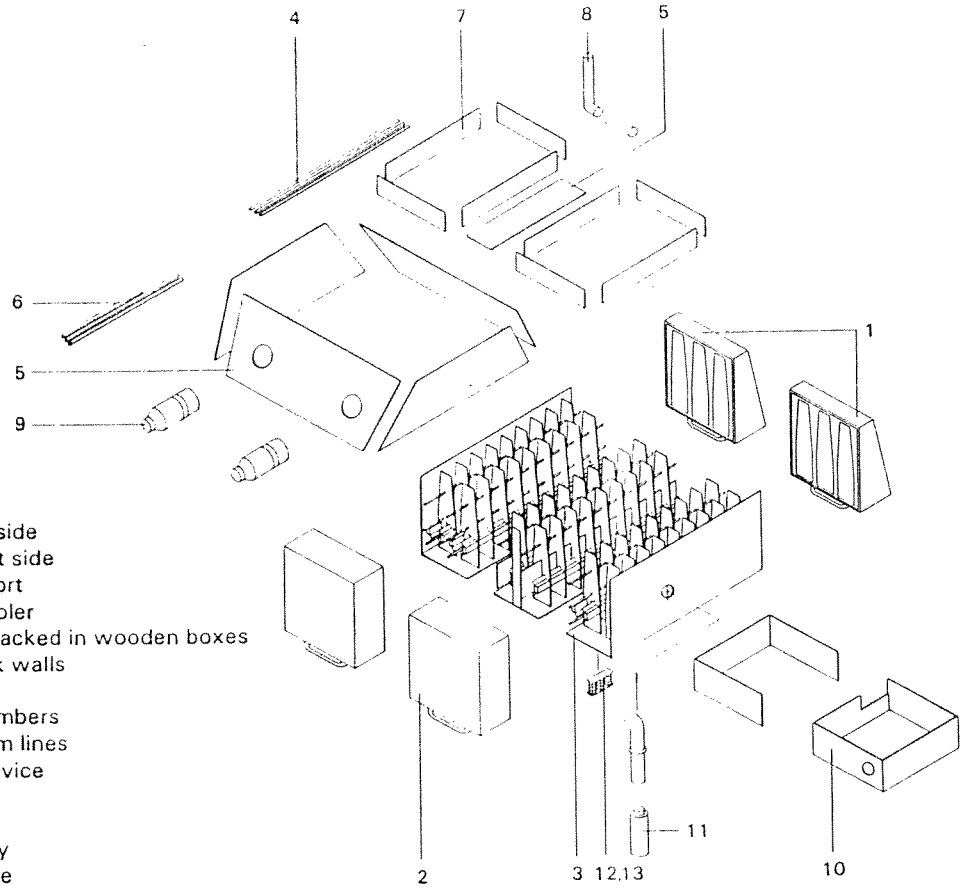

Legend:

1 Waterbox inlet side
2 Waterbox outlet side
3 Shell incl. support plate and air cooler
4 Cooling tubes packed in wooden boxes
5 Condenser neck walls
6 Staytubes
7 Connecting members
8 Extraction steam lines
9 Steam dump device
10 Hotwell
11 Flash vessel
12 Spring assembly
13 Foundation plate

Fig. 4 Surface condenser type CM – parts dismantled for transport

Plant	Hopewell, Va	Main Condenser
Order No.	1 - 352 800	KKS-No. 14 MAG01 AC001
Process & Instrumentation Diagram	HTDM 050 043	/ Rev. 1

Dimensions

Design	ABB	Type	CM 37+43-2-124-4x1600/24/0.7
Tot Surface / No of Passes		sqft	63 968 / 4
Total Number of Tubes		-	6 400
Bundle Tubes Out.Diam.xSxL		inch	0.945 / 0.0276 / 488.2
Outer Tubes Out.Diam.xSxL		inch	0.945 / 0.0276 / 488.2
Cooling Water System			Wet Cooling Tower

Operating Data (Heat Balance No.01,Design Point)

Turbine Ex.Flow	lbs/h	620 673	Cooling W.Flow	lbs/h	23 850 585
Condenser Press.	psia	0.905	W.Velocity in T.	fpm	460
Cool.W Temp.Inl.	°F	70	p Cool. Water	psi	9.9
Min Col.W.Temp.	°F	59	Max Col.W.Temp.	°F	99

Design Data

		Steam Side	Water Side
Design / Test Overpressure	psig	5.8 / later	72.5 / later
Design Temp.	°F	230	176

Materials

Bundle Tubes	TP 316	Tubesheet	Carbon Steel
Outer Tubes	TP 316	Tubesheet Cladd.	TP 316
Waterbox Coat	Epoxy		

Documentation

Description	HTDM	Sectional Draw.	HTDM
later		later	

HTDA 601 176 / 0

STRUTHERS INDUSTRIES, INC.

HEAT EXCHANGER SPECIFICATION SHEET

CASE 1 PER SPEC.

Customer	Asea Brown Boveri, Inc.	Job No.	
Address	1460 Livingston Avenue, North Brunswick, NJ 08902	Reference No.	3-87-06-53700
Plant Location	Hopewell, Virginia	Proposal No.	5289-N6-S5
Service of Unit	Water/Water Coolers	Date	2-6-89 Rev.
Size	12 IN x 12.00 FT Type shell and Tube - NEN	Item No.	2.0
Surf/Unit (Gross)	285 Sq Ft: Shells/Unit	Connected In	1 Parallel 1 Series
(Eff.)	279 two (2) shells required	Surf/Shell (Gross)	285 Sq Ft
		(Eff.)	279

PERFORMANCE OF ONE UNIT

Fluid Allocation		Shell Side		Tube Side	
Fluid Name		Closed Circ.		Main Cooling	
Fluid Quantity, Total	Lb/Hr	130,000		310,000	
Vapor (In/Out)					
Liquid					
Steam					
Water		130,000	130,000	310,000	310,000
Noncondensable					
Temperature (In/Out)	°F	111.2	95.2	71.0	77.8
Specific Gravity		61.7	62.0	62.2	62.2
Viscosity, Liquid	Cp	.6164	.7282	.9659	.8883
Molecular Weight, Vapor					
Molecular Weight, Noncondensable					
Specific Heat	Btu/Lb °F	.9980	.9990	1.0014	1.0006
Thermal Conductivity	Btu Ft/Hr Sq Ft °F	.3660	.3621	.3556	.3575
Latent Heat	Btu/Lb @ °F				
Inlet Pressure	Psig	.00		.00	
Velocity	Ft/S	2.51		4.36	
Pressure Drop, Allow./Calc.	Psi	9.0	/ 7.0	4.40	/ 2.0
Fouling Resistance (Min.)		80% cleanliness factor		80% cleanliness factor	

Heat Exchanged 2,117,500 Btu/Hr; MTD (Corrected) 28.51 °F

Transfer Rate, Service 266 Clean 492 Btu/Hr Sq Ft °F

CONSTRUCTION OF ONE SHELL

		Shell Side	Tube Side
Design/Test Pressure	Psig	86 / 129	90 / 135
Design Temperature	°F	150	150
No. Passes per Shell		1	1
Corrosion Allowance	In.	1/16	1/16
Connections Size & Rating	In	6"	6"
	Out	6"	6"
	Intermediate	150# flanged	150# flanged

Sketch (Bundle/Nozzle Orientation)

Tube No. 121 OD 3/4 In.:Thk (Min/Avg) .028 In.: Length 12.00 Ft: Pitch 15/16 In. ◇ 30 ~~◇ 60 □ 90 ◇ 45~~

Tube Type plain Material 316 S.STL layout angle 30°

Shell steel pipe ID 12.090 OD 12-3/4 In. Shell Cover -- (Integ.) (Remov.)

Channel or Channel Cover steel

Tubesheet-Stationary steel Tubesheet-Floating --

Floating Head Cover -- Impingement Protection no

Baffles-Cross horz.segmental Type 26.25 % Cut (Diam/Area) Spacing: c/c 9.8125 Inlet 11.83 In.

Baffles-Long no Seal Type

Supports-Tube no U-Bend Type

Bypass Seal Arrangement peripheral no passlane no Tube-Tubesheet Joint

Expansion Joint no Type

Inlet Nozzle 168 Bundle Entrance 1399 Bundle Exit 1394

Gaskets-Shell Side none Tube Side corrugated steel with non-asbestos filler

-Floating Head --

Code Requirements Section VIII, Div. 1 stamp yes HEI-PPHE

Weight/Shell Filled with Water Bundle Lb

Remarks Tubes are roller expanded into double grooved tubesheets.

1. PLATE HEAT EXCHANGERS - GENERAL DESCRIPTION

Between two plates of steel the heat transfer surfaces - the heat exchanger plates - are clamped with the aid of tightening bolts. The heat exchanger's construction enables a plate heat exchanger to be easily opened for inspection and cleaning.

Each heat exchanger plate is pressed in one piece, with no joins or welds whatsoever. Each plate has four holes punched out, one in each corner. Multi-pass heat exchangers have special turning plates in which two of the holes are left blank.

Rubber gaskets are glued in the gasket groove around the heat transfer surface and holes. The gaskets are supported on both sides by the corrugations in the plate.

The gasket is double around the holes to prevent leakage between the media. In the event of gasket failure the medium runs straight out of the equipment.

Ultra Flex heat exchange plates are made with two different arrowhead angles - one obtuse giving a high-theta plate, and one acute giving a low-theta plate.

Between two adjacent plates a flow channel is formed with the aid of the gaskets. The positioning of the gaskets produces a channel system through the entire plate pack in which the two heat exchanging media flow in counter-current.

Liquid flows diagonally across the Ultra Flex heat exchange plates.

No liquid flows between the plates adjacent to the frame plate and the pressure plate.

The thermal properties of a flow channel formed by two high-theta plates differ significantly from one formed by two low-theta plates.

The plates' criss-crossing corrugations offer important advantages:

* The liquid stream is subjected to intensive turbulence in the channels formed between the plates, resulting in a high heat transfer coefficient as well as reducing the risk of deposits on the heat transfer surface.
* The characteristics of the flow channels are known precisely. Thus the heat exchanger can be dimensioned extremely accurately, both with respect to its thermal properties and its pressure drop.

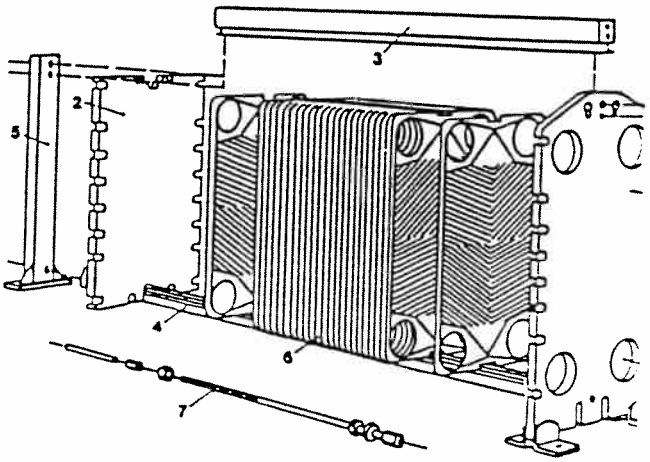

1. Frame plate
2. Pressure plate
3. Carrying bar
4. Guiding bar
5. End support
6. Plates
7. Tightening bol
8. Connection por

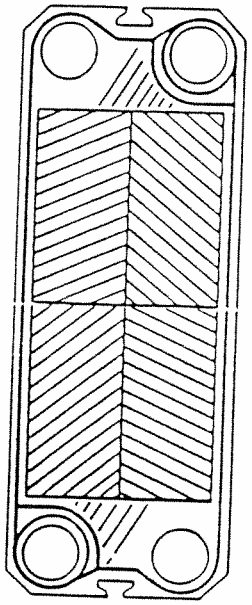

High-theta plate

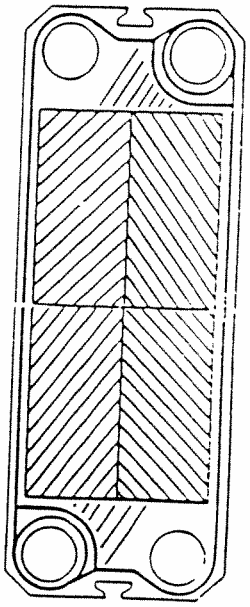

Low-theta plate

* * * PERFEX INDUSTRIAL PRODUCTS * * *

AIR COOLER SPECIFICATION SHEET

CUSTOMER ASEA BROWN BOVERI CORP.

INQUIRY NO. 35466
DATE 07/26/88
CUSTOMER NO. Hopewell Proj
ITEM NO.
AIRFLOW VERT/HORIZ

SERVICE OF UNIT AIR COOLER
SIZE 19/137-A- 72
SURFACE/UNIT 12714 COOLERS/UNIT 4 SURFACE/COOLER 3178

******************************* PERFORMANCE/UNIT *******************************

		FIN SIDE AIR		TUBESIDE WATER	
FLUID CIRCULATED					
TOTAL FLUID ENTERING		70560 CFM @ 122 F AND 14.70 PSIA = 4808 #/MIN		1000	GPM
TEMPERATURE IN		201.2	F	96.0	F
TEMPERATURE OUT		122.0	F	109.1	F
OPERATING PRESSURE		14.70	PSIA		PSIG
NUMBER OF PASSES		ONE		2	CF
VELOCITY	FACE	950	FPM	7.8	FPS
PRESSURE DROP		1.76	IWG	7.8	PSI
FOULING RESISTANCE		0.0000		0.0010	
FOULING RESISTANCE					

HEAT EXCHANGED (1607 KW) 5484691 BTU/HR MTD(CORRECTED) 48.72 F
TRANSFER RATE SERVICE 8.85 BTU/HR-SQ.FT-F

******************************* CONSTRUCTION/COOLER *******************************

DESIGN PRESSURE		PSI	125	PSI
TEST PRESSURE		PSI	187	PSI
DESIGN TEMPERATURE	225	F	200	F

INNER TUBES: 90/10 NO. 88 O.D.0.625 WALL0.049 LENGTH(BTS) 137 IN.
PITCH 1.500 TRI

WATERBOX: C STL WATERBOX COVER: C STL
OUTER TUBESHEET: MUNTZ
FIN: ALUMINUM TYPE FLAT THK0.010 FPI 11
CONNECTIONS: WATERBOX IN 4.0 INCHES OUT 4.0 INCHES
TUBESIDE CORROSION ALLOWANCE
CODE REQUIREMENTS:ASME VIII-1
APPROXIMATE WEIGHT-EACH COOLER DRY 1383 OPERATING 1504

REMARKS: ALL FOUR COOLERS OPERATING AT 100% OF FULL LOAD CAPACITY.
ONE ALUMINUM BLOCKING PLATE FOR MASKING AIR FLOW THROUGH ONE COOLER IS PROVIDED BY PERFEX.

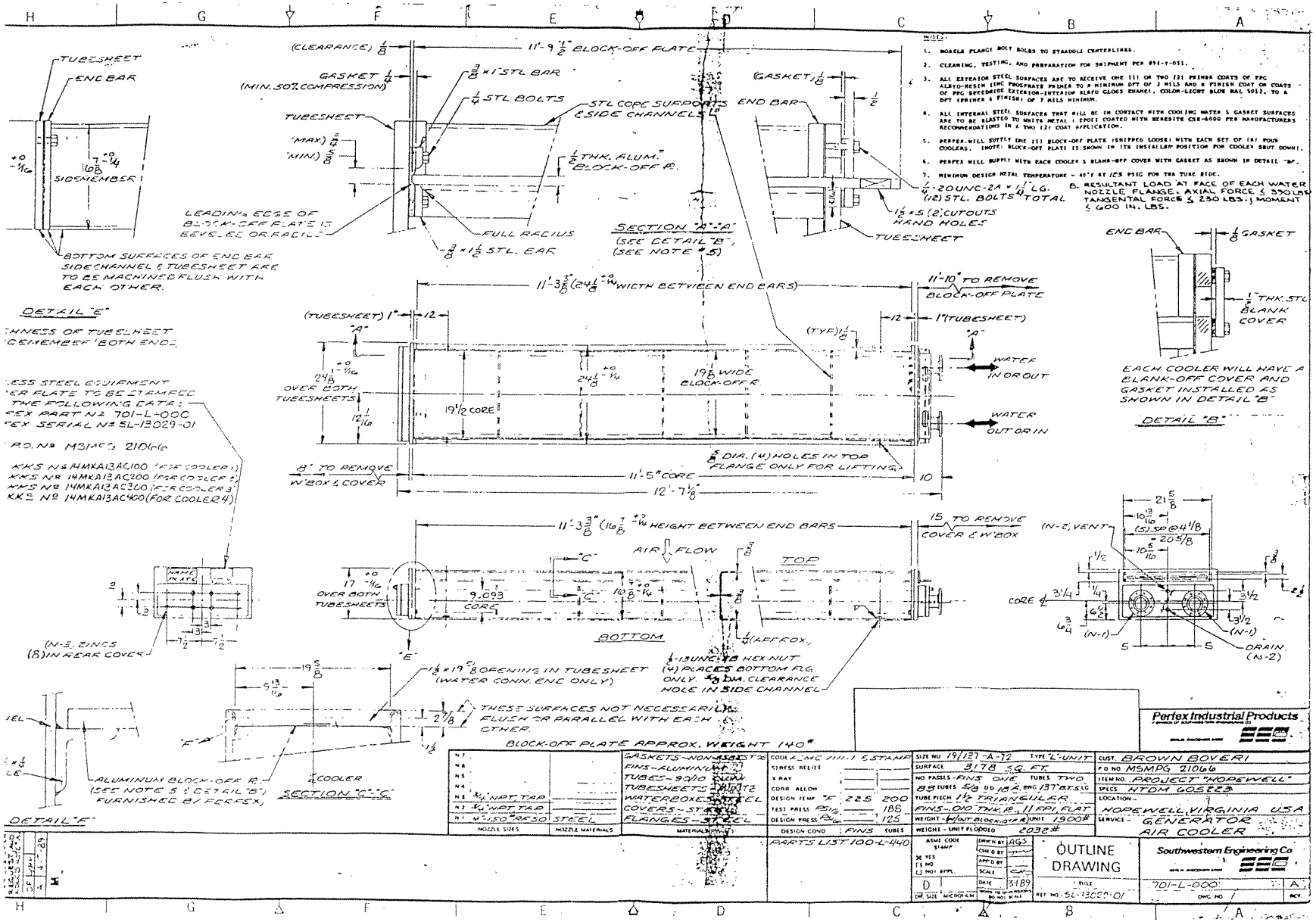
NOTES:
1. MODEL FLANGE BOLT HOLES TO STRADDLE CENTERLINES.
2. CLEANING, TESTING, AND PREPARATION FOR SHIPMENT PER 891-Y-051.
3. ALL EXTERIOR STEEL SURFACES ARE TO RECEIVE ONE (1) OR TWO (2) PRIMER COATS OF PPG ALKYD-RESIN (INC PHOSPHATE PRIMER TO A MINIMUM DFT OF 2 MILS AND A FINISH COAT OR COATS OF PPG SPEEDHIDE EXTERIOR-INTERIOR ALKYD GLOSS ENAMEL, COLOR-LIGHT BLUE RAL 5012, TO A DFT (PRIMER & FINISH) OF 7 MILS MINIMUM.
4. ALL INTERNAL STEEL SURFACES THAT WILL BE IN CONTACT WITH COOLING WATER & GASKET SURFACES ARE TO BE BLASTED TO WHITE METAL & EPOXY COATED WITH WEARSITE CSE-4000 PER MANUFACTURERS RECOMENDATIONS IN A TWO (2) COAT APPLICATION.
5. PERFEX WILL SUPPLY ONE (1) BLOCK-OFF PLATE (SHIPPED LOOSE) WITH EACH SET OF (8) FOUR COOLERS. (NOTE: BLOCK-OFF PLATE IS SHOWN IN ITS INSTALLED POSITION FOR COOLER #BUT DOWN).
6. PERFEX WILL SUPPLY WITH EACH COOLER 5 BLANK-OFF COVER WITH GASKET AS SHOWN IN DETAIL "B".
7. MINIMUM DESIGN METAL TEMPERATURE - 40°F AT 125 PSIG FOR THE TUBE SIDE.
8. RESULTANT LOAD AT FACE OF EACH WATER NOZZLE FLANGE: AXIAL FORCE 5 330 LBS TANGENTAL FORCE 5 230 LBS.) MOMENT 5 600 IN. LBS.
(CLEARANCE) 1/8
11'-9 1/2" BLOCK-OFF PLATE
GASKET 1/4 (MIN. 50% COMPRESSION)
3/8 x 1" STL BAR
1/4 STL BOLTS
STL COPE SUPPORTS & SIDE CHANNELS
TUBESHEET
END BAR
(GASKET) 1/8
1/2
(MAX) 3/4
(MIN) 5/8
1/2 THK. ALUM. BLOCK-OFF R.
7 +0 -1/16 / 16 3/8
SIDEMEMBER
LEADING EDGE OF BLOCK-OFF PLATE IS BEVELED OR RADIUS
FULL RADIUS
3/8 x 1 1/2 STL. EAR
1/2-20UNC-2A x 1 1/4" LG. (12) STL. BOLTS TOTAL
1/2 x 5 (2) CUTOUTS HAND HOLES
TUBESHEET
SECTION "A"-"A" (SEE DETAIL "B", (SEE NOTE #5)
BOTTOM SURFACES OF END BAR SIDE CHANNEL & TUBESHEET ARE TO BE MACHINED FLUSH WITH EACH OTHER.
DETAIL "E"
11'-3 3/8" (24 1/8 +0 -1/16) WIDTH BETWEEN END BARS
11'-10" TO REMOVE BLOCK-OFF PLATE
(TUBESHEET) 1" 12
1" (TUBESHEET) 12
"A"
(TYP) 1/8
WATER IN OR OUT
24 +0 -1/16 / 8 OVER BOTH TUBESHEETS
24 1/8 +0 -1/16
19 1/8 WIDE BLOCK-OFF R.
19 1/2 CORE
12 1/16
WATER OUT OR IN
3/8 DIA. (4) HOLES IN TOP FLANGE ONLY FOR LIFTING
8" TO REMOVE W'BOX & COVER
11'-5" CORE
10
12'-7 1/8"
END BAR
1/8 GASKET
1/2 THK. STL BLANK COVER
EACH COOLER WILL HAVE A BLANK-OFF COVER AND GASKET INSTALLED AS SHOWN IN DETAIL "B"
DETAIL "B"
11'-3 3/8" (16 7/8 +0 -1/16) HEIGHT BETWEEN END BARS
15 TO REMOVE COVER & W'BOX
AIR FLOW
TOP
"C"
17 +0 -1/16 OVER BOTH TUBESHEETS
9.093 CORE
10 7/8 +0 -1/16
3/8
1/4 (APPROX.)
BOTTOM
"E"
1-13UNC-2B HEX NUT (4) PLACES BOTTOM FLG. ONLY. 5/8 DIA. CLEARANCE HOLE IN SIDE CHANNEL
(N-2, VENT)
21 5/8
10 13/16
(5) SP @ 4 1/8
20 5/8
10 5/16
1/2
3/8
CORE ℄
3 1/4
1/4
3 1/2
6 1/2
6 3/4
(N-1)
(N-1)
5
5
DRAIN (N-2)
(N-3, ZINCS (8) IN REAR COVER
19 5/8
5 13/16
1/8 x 19 7/8 OPENING IN TUBESHEET (WATER CONN. END ONLY)
2 7/8
THESE SURFACES NOT NECESSARILY FLUSH OR PARALLEL WITH EACH OTHER.
"F"
1/2
BLOCK-OFF PLATE APPROX. WEIGHT 140#
ALUMINUM BLOCK-OFF R. (SEE NOTE 5 & DETAIL "B") FURNISHED BY PERFEX.
COOLER
SECTION "G"-"G"
DETAIL "F"
Perfex Industrial Products
N1
N2
N3
N4
N5
N6 3/4" NPT TAP
N7 3/4" NPT TAP
N8 M-150 THC30 STEEL
NOZZLE SIZES
NOZZLE MATERIALS
GASKETS - NON-ASBESTOS
FINS - ALUMINUM
TUBES - 90/10 CUNI
TUBESHEETS - ALUMINUM
WATERBOXES - STEEL
COVERS - STEEL
FLANGES - STEEL
MATERIALS (MAW)
CODE ASME VIII-1 & STAMP
STRESS RELIEF
X RAY
CORR. ALLOW.
DESIGN TEMP °F 225 200
TEST PRESS PSIG 188
DESIGN PRESS PSIG 125
DESIGN COND. FINS TUBES
SIZE NO. 19/127-A-72 TYPE "L"-UNIT
SURFACE 3178 SQ. FT.
NO PASSES - FINS ONE TUBES TWO
88 TUBES 5/8 OD 18 A. BWG 137" ATS LG
TUBE PITCH 1 1/2 TRIANGULAR
FINS - .010 THK. R. 11 FPI, FLAT
WEIGHT - W/OUT BLOCK-OFF R. UNIT 1900#
WEIGHT - UNIT FLOODED 2032#
CUST. BROWN BOVERI
P.O. NO. MSMPG 21066
ITEM NO. PROJECT "HOPEWELL"
SPECS. HTDM 605223
LOCATION - HOPEWELL, VIRGINIA USA
SERVICE - GENERATOR AIR COOLER
PARTS LIST 100-L-440
ASME CODE STAMP
YES
NO
NOT APPL.
DRAWN BY AGS
CHK'D BY
APP'D BY
SCALE
DATE 5-1-89
D
OR SIZE MICROFILM
OUTLINE DRAWING
TITLE
REF NO. SL-13029-01
Southwestern Engineering Co.
701-L-000
DWG. NO. 1
REV. A
REVISED ST AND CODE DATA
SF
4
4-7-89
M

Plant: Hopewell	Job No:
No. of units: 1	Service: Generator Air Cooler (For Steam Turbine)
Shells per unit: 4	Duty of shells: 4 x 25 %
Type:	Dim. dwg.:

Connection Shell side Tube side	 parallel ⊗ parallel ⊗	 series ○ series ○
Arrangement	vertical ○	horizontal ⊗

Performance of 1 unit

	Shell side	Tube side
Fluid circulated	Air	Water
Viscosity		
Gravity		
Specific Heat		
Total fluid entering	33.3 m³/s = 1176 cuft/s	Approx. 1000 GPM
Temperature in / out	96 °C / 50 °C 205 °F / 122 °F	37 °C / 98 °F /
Operating pressure	Atmosphere	≤ 125 psig
No. of passes p. shell		(even No)
Velocity		1-2 m/s (3.3-6.5 ft/s)
Pressure drop	≤ 470 Pa (1.9 in Water)	≤ 0.6 bar (8.7 psi)
Fouling resistance	—	0.001 h ft² °F/BTU
Heat exchanged	16.07 kW = 5.483 × 10⁶ BTU/h	
Surface per shell	(outside)	
Ratio of outside to inside surface of tubing	(For extended tubes)	
Heat transfer rate clean / service		

Formular-Nr.: HTGW637063/1A 0

Für den Fall der Patenterteilung und der Eintragung eines anderen gewerblichen Schutzrechtes, vor Mißbrauchliche Verwendung, wie insbesondere Vervielfältigung und Weitergabe an Dritte ist nicht gestattet; sie kann zivil- und strafrechtlich geahndet werden

Änd		Entst aus	Ausgest 88-07-07	Maßstab	Sep SL gleicher Nr ☐	Sep SL anderer Nr ☐		
		Ersatz für	Geprüft		Ohne sep Stückliste ☐			
		Ers durch	Normgeprüft		Dok.-Art	Format	Sprache	Bl Nr	Anz Bl
		Zust Stelle	Freigeg			4	E	1	4

BBC Brown Boveri

Titel

7-305 - HTDM605179

Cooling Water

Quality, Type	Freshwater ⊗ Seawater ○	Condensate ○ Closed circ. C.W. ○

Construction

	Shell side	Tube side
Design pressure	—	125 psig
Test pressure	—	187.5 psig
Design temperature	100 °C = 212 °F	60 °C = 140 °F

Tubes

No.	O.D. ≥ 5/8"	J.D.
Length: 3500 mm (~11.5 ft)		Pitch:
Plain ○		Extended ⊗
Straight ⊗		U-Tubes ○
Fixation: expanded ⊗ / welded ○		
Material: Cu Ni 10 Fe Standard: ASTM B 111 No 706		

Tube sheets

Stationary: Floating: —	Thickness: Thickness: —
Material: Muntz metal Standard: ASTM B 171 No 365	

Channel

Material: Carbon steel or cast iron Standard:	
Protection coating: no ○ yes ⊗ Type: Epoxy	

Channel cover

Material: No cover Standard:	
Protection coating: no ○ yes ○ Type:	

Formular-Nr.: 0
ATGW 637 063/2A

Zu dieser Unterlage behalten wir uns alle Rechte, auch für den Fall der Patenterteilung und der Eintragung eines anderen gewerblichen Schutzrechtes, vor. Mißbräuchliche Verwendung, wie insbesondere Vervielfältigung und Weitergabe an Dritte ist nicht gestattet; sie kann zivil- und strafrechtlich geahndet werden

Entst. aus	Ausgest.	Maßstab	Sep. SL gleicher Nr. ☐	Sep. SL anderer Nr.	
Ersatz für	Geprüft		Ohne sep. Stückliste ☐		
Ers. durch	Normgeepr.		Dok.-Art	Format 4	Sprache E	Bl. Nr. 2	Anz. Bl. 4
Zust. Stelle	Freigeg.						

BBC Brown Boveri

Titel

HTDM 605179

0.200603 P.S.

Construction (Cont.)

Shell (Side walls)	O.D.	J.D.	Lgth.
	Material : steel Standard :		
Baffles	Type : — Material : —		
Tube supports	Material: Steel		
Gaskets	Material:		
Protection anodes	no ○ yes ⊗	Material: Iron	
Connections	Shellside: In : — Out : — Rating : —	Tubeside: In : Out : Rating : ANSI 150	
Weight per shell	Empty:	Service :	
Tube bundle	Fixed ○ Removeable ○ Weight :	Space for withdrawal and/or cleaning of tubes :	

Code and Standard Requirements, Certificates, Tests

Code and Standards	ASME VIII Pressure vessel code
Tests	According to ASME VIII requirements
Certificates	According to ASME VIII requirements
Remarks, Attachments	U-Stamp is not required for Generator Air/Gas-Coolers

Formular-Nr.: 0 HTGW637063/3A

Für diese Unterlage behalten wir uns alle Rechte, auch für den Fall der Patentierung und der Eintragung eines anderen gewerblichen Schutzrechtes, vor. Mißbräuchliche Verwendung, wie insbesondere Verviel-fältigung und Weitergabe an Dritte ist nicht gestattet; sie kann zivil- und strafrechtlich geahndet werden

And	Entst aus	Ausgest	Maßstab	Sep SL gleicher Nr ☐	Sep SL anderer Nr ☐			
	Ersatz für	Geprüft		Ohne sep Stückliste ☐				
	Ers durch	Normgeor		Dok-Art	Format 4	Sprache E	Bl Nr 3	Anz Bl 4
	Zust Stelle	Freigeg						

BBC BROWN BOVERI

Titel

HTDM 605179

Remarks

The coolers are placed in the machine foundation next to each other.

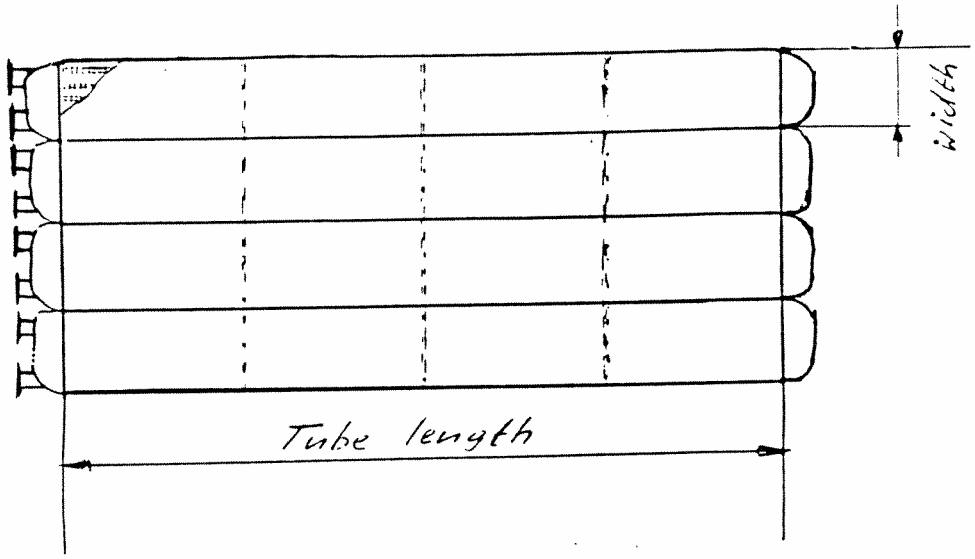

The following dimensions must be respected:

Tube length 3500 mm or 11.5 ft
Width 610 mm or 2 ft (approx.)

The scope of supply includes a multi-section frame for the installation of the coolers.

For drain and venting purposes the necessary connections must be provided.

Für diese Unterlage behalten wir uns alle Rechte, auch für den Fall der Patenterteilung und der Eintragung eines anderen gewerblichen Schutzrechtes, vor. Mißbräuchliche Verwendung, wie insbesondere Vervielfältigung und Weitergabe an Dritte ist nicht gestattet, sie kann zivil- und strafrechtlich geahndet werden

Formular-Nr. 0
hi GW637063/1 A1

Änd		Entst aus	Ausgest	Maßstab	Sep SL gleicher Nr ☐	Sep SL anderer Nr ☐			
		Ersatz für	Geprüft		Ohne sep Stückliste ☐				
		Ers durch	Normgepr		Dok-Art	Format 4	Sprache E	Bl Nr 4	Anz Bl 4
		Zust Stelle	Freigeg						

BBC

Titel

HTDM605179

COMMERCIAL METALS AND ALLOYS
Miscellaneous Properties (Typical Values)

Common name and classification	Thermal conductivity W/cm K	Thermal conductivity Btu/hr ft °F	Thermal conductivity cal/s cm K	Density g/cm³	Coeff. of linear expansion, μ in./in. °F	Electrical resistivity, microhm-cm	Modulus of elasticity, millions of psi	Approximate melting point °F	Approximate melting point °C
Ingot iron (included for comparison)	1.3	77	0.32	7.86	6.8	9	30	2800	1538
Plain carbon steel AISI–SAE 1020	1.0	56	0.23	7.86	6.7	10	30	2760	1515
Stainless steel type 304	0.3	19	0.08	8.02	9.6	72	28	2600	1427
Cast gray iron ASTM A48–48, Class 25	0.8	48	0.20	7.2	6.7	67	13	2150	1177
Malleable iron ASTM A47				7.32	6.6	30	25	2250	1232
Ductile cast iron ASTM A339, A395	0.6	34	0.14	7.2	7.5	60	25	2100	1149
Ni-resist cast iron, type 2	0.7	41	0.17	7.3	9.6	170	15.6	2250	1232
Cast 28-7 alloy (HD) ASTM A297–63T	0.04	2	0.01	7.6	9.2	41	27	2700	1482
Hastelloy C	0.2	10	0.04	3.94	6.3	139	30	2350	1288
Inconel X, annealed	0.3	17	0.07	8.25	6.7	122	31	2550	1399
Haynes Stellite alloy 25 (L605)	0.2	10	0.04	9.15	7.61	88	34	2500	1371
Aluminum alloy 3003, rolled ASTM B221	2.8	164	0.68	2.73	12.9	4	10	1200	649
Aluminum alloy 2017, annealed ASTM B221	3.0	174	0.72	2.8	12.7	4	10.5	1185	641
Aluminum alloy 380 ASTM SC84B	1.8	102	0.42	2.7	11.6	7.5	10.3	1050	566
Copper ASTM B152, B124, B133, B1, B2, B3	4.0	230	0.96	8.91	9.3	1.7	17	1980	1082
Yellow brass (high brass) ASTM B36, B134, B135	2.2	126	0.52	8.47	10.5	7	15	1710	932
Aluminum bronze ASTM B169, alloy A; ASTM B124, B150	1.3	75	0.31	7.8	9.2	12	17	1900	1038
Beryllium copper 25 ASTM B194	0.2	12	0.05	8.25	9.3	–	19	1700	927
Nickel silver 18% alloy A (wrought) ASTM B122, No. 2	0.6	34	0.14	8.8	9.0	29	18	2030	1110
Cupronickel 30%	0.5	31	0.13	8.95	8.5	35	22	2240	1227
Red brass (cast) ASTM B30, No. 4A	1.3	77	0.32	8.7	10	11	13	1825	996
Chemical lead	0.6	36	0.15	11.35	16.4	21	2	621	327
Antimonial lead (hard lead)	0.5	31	0.13	10.9	15.1	23	3	554	290
Solder 50–50	0.8	48	0.20	8.89	13.1	15	–	420	216
Magnesium alloy AZ31B	1.4	82	0.34	1.77	14.5	9	6.5	1160	627
K Monel	0.3	19	0.08	8.47	7.4	58	26	2430	1332
Nickel ASTM B160, B161, B162	1.1	63	0.26	8.89	6.6	10	30	2625	1441
Cupronickel 55–45 (Constantan)	0.4	24	0.10	8.9	8.1	49	24	2300	1260
Commercial titanium	0.3	19	0.08	5	4.9	80	16.5	3300	1816
Zinc ASTM B69	1.2	70	0.29	7.14	18	6	–	785	418
Zirconium, commercial	0.3	19	0.08	6.5	2.9	41	12	3350	1843

STANDARD TYPES OF STAINLESS AND HEAT RESISTING STEELS

Chemical Ranges and Limits
Subject to Tolerances for Check Analyses
By permission of American Iron and Steel Institute

Chemical composition (%)

Type number	C	Mn Max.	P Max	S Max.	Si Max.	Cr	Ni	Mo	Zr	Se	Cb-Ta	Ta	Al
201[c]	0.15 Max.	5.50/ 7.50	0.060	0.030	1.00	16.00/ 18.00	3.50/ 5.50						
202[c]	0.15 Max.	7.50/ 10.00	0.060	0.030	1.00	17.00/ 19.00	4.00/ 6.00						
301[c]	0.15 Max.	2.00	0.045	0.030	1.00	16.00/ 18.00	6.00/ 8.00						
302[c]	0.15 Max.	2.00	0.045	0.030	1.00	17.00/ 19.00	8.00/ 10.00						
302B[c]	0.15 Max.	2.00	0.045	0.030	2.00/ 3.00	17.00/ 19.00	8.00/ 10.00						
303[c]	0.15 Max.	2.00	0.20	0.15 Min.	1.00	17.00/ 19.00	8.00/ 10.00	0.60 Max.[a]	0.60 Max.[a]				
303 Se[c]	0.15 Max.	2.00	0.20	0.06	1.00	17.00/ 19.00	8.00/ 10.00			0.15 Min.			
304[c]	0.08 Max.	2.00	0.045	0.030	1.00	18.00/ 20.00	8.00/ 12.00						
304L[c]	0.03 Max.	2.00	0.045	0.030	1.00	18.00/ 20.00	8.00/ 12.00						
305[c]	0.12 Max.	2.00	0.045	0.030	1.00	17.00/ 19.00	10.00/ 13.00						
308[c]	0.08 Max.	2.00	0.045	0.030	1.00	19.00/ 21.00	10.00/ 12.00						
309[c]	0.20 Max.	2.00	0.045	0.030	1.00	22.00/ 24.00	12.00/ 15.00						
309S[c]	0.08 Max.	2.00	0.045	0.030	1.00	22.00/ 24.00	12.00/ 15.00						
310[c]	0.25 Max.	2.00	0.045	0.030	1.50	24.00/ 26.00	19.00/ 22.00						
310S[c]	0.08 Max.	2.00	0.045	0.030	1.50	24.00/ 26.00	19.00/ 22.00						
314[c]	0.25 Max.	2.00	0.045	0.030	1.50/ 3.00	23.00/ 26.00	19.00/ 22.00						
316[c]	0.08 Max.	2.00	0.045	0.030	1.00	16.00/ 18.00	10.00/ 14.00	2.00/ 3.00					
316L[c]	0.03 Max.	2.00	0.045	0.030	1.00	16.00/ 18.00	10.00/ 14.00	2.00 3.00					
317[c]	0.08 Max.	2.00	0.045	0.030	1.00	18.00/ 20.00	11.00/ 15.00	3.00/ 4.00					
321[c]	0.08 Max.	2.00	0.045	0.030	1.00	17.00/ 19.00	9.00/ 12.00				5 × C Min.		
347[c]	0.08 Max.	2.00	0.045	0.030	1.00	17.00/ 19.00	9.00/ 13.00					10 × C Min.	
348[c]	0.08 Max.	2.00	0.045	0.030	1.00	17.00/ 19.00	9.00/ 13.00				10 × C Min.	0.10 Max.	
403[b]	0.15 Max.	1.00	0.040	0.030	0.50	11.50/ 13.00							
405[d]	0.08 Max.	1.00	0.040	0.030	1.00	11.50/ 14.50							0.10/ 0.30
410[b]	0.15 Max.	1.00	0.040	0.030	1.00	11.50/ 13.50							
414[b]	0.15 Max.	1.00	0.040	0.030	1.00	11.50/ 13.50	1.25/ 2.50						
416[b]	0.15 Max.	1.25	0.06	0.15 Min.	1.00	12.00/ 14.00		0.60 Max.[a]	0.60 Max.[a]				
416 Se[b]	0.15 Max.	1.25	0.06	0.06	1.00	12.00/ 14.00				0.15 Min.			
420[b]	Over 0.15	1.00	0.040	0.030	1.00	12.00/ 14.00							
430[a]	0.12 Max.	1.00	0.040	0.030	1.00	14.00/ 18.00							
430F[d]	0.12 Max.	1.25	0.06	0.15 Min.	1.00	14.00/ 18.00		0.60 Max.	0.60 Max.[a]				
430F Se[d]	0.12 Max.	1.25	0.06	0.06	1.00	14.00/ 18.00				0.15 Min.			
431[b]	0.20 Max.	1.00	0.040	0.030	1.00	15.00/ 17.00	1.25/ 2.50						
440A[b]	0.60/ 0.75	1.00	0.040	0.030	1.00	16.00/ 18.00		0.75 Max.					

Chemical Compositions of Stainless Steels

Wrought Stainless Steels									
Alloy	C	Mn	P	S	Si	Cr	Ni	Mo	Others
201	0.15	6.50	0.060	0.030	1.00	17.00	4.50	-	0.25N
202	0.15	9.00	0.060	0.030	1.00	18.00	5.00	-	0.25N
301	0.15	2.00	0.045	0.030	1.00	17.00	7.00	-	-
302	0.15	2.00	0.045	0.030	1.00	18.00	9.00	-	-
303	0.15	2.00	0.20	0.15	1.00	18.00	9.00	0.60	-
303Se	0.15	2.00	0.20	0.06	1.00	18.00	9.00	0.60	0.15Se
304	0.08	2.00	0.045	0.030	1.00	19.00	9.25	-	-
304L	0.03	2.00	0.045	0.030	1.00	19.00	10.0	-	-
309S	0.08	2.00	0.045	0.030	0.75	23.00	13.5	-	-
310S	0.08	2.00	0.045	0.030	1.50	25.00	20.5	-	-
316	0.08	2.00	0.045	0.030	1.00	17.00	12.0	2.5	-
316L	0.03	2.00	0.045	0.030	1.00	17.00	12.0	2.5	-
317	0.08	2.00	0.045	0.030	1.00	19.00	13.0	3.5	-
317L	0.03	2.00	0.045	0.030	1.00	19.00	13.0	3.5	-
321	0.08	2.00	0.045	0.030	1.00	18.00	10.5	-	Ti 5 X C
329	0.10	2.00	0.045	0.030	1.00	27.50	4.5	1.50	-
330	0.08	2.00	0.040	0.030	1.00	18.50	35.5	-	-
347	0.08	2.00	0.045	0.030	1.00	18.00	11.0	-	Cb+Ta 10 X C
409	0.08	1.00	0.045	0.045	1.00	11.50	35.5	-	Ti 6 x C
410	0.15	1.00	0.040	0.030	1.00	12.50	-	-	-
416	0.15	1.25	0.040	-	1.00	13.00	-	0.60	S =0.15 min.
416Se	0.15	1.25	0.060	0.060	1.00	13.00	-	-	0.15 Se
420	0.15 min.	1.00	0.040	0.030	1.00	13.00	-	-	-
430	0.12	1.00	0.040	0.030	1.00	17.00	-	-	-
440C	1.00	1.00	0.040	0.030	1.00	17.00	-	-	-
442	0.20	1.00	0.040	0.030	1.00	20.50	-	-	-
904L	0.02	2.00	0.045	0.035	1.00	21.00	25.5	4.5	Cu 1.5
17-4 PH	0.07	1.00	0.045	0.035	1.00	16.5	5.5	-	Cu 3-5, 0.4 Al
17-7 PH	0.09	1.00	0.045	0.035	1.00	17.0	7.0	-	.75-1.5 Al
2205	0.03	2.00	0.030	0.020	1.00	22.0	5.5	3.0	0.15 N

Cast Stainless Steels									
CA-6NM	0.06	1.00	0.045	0.035	1.00	12.50	4.00	0.70	-
CA-15	0.15	1.00	-	-	1.50	12.50	1.00	-	-
CA-40	0.40	1.00	-	-	1.50	12.50	1.00	-	-
CF-3	0.03	1.50	0.040	0.040	2.00	19.00	10.00	-	-
CF-3M	0.03	1.50	0.040	0.040	1.50	19.00	10.00	2.5	-
CF-8	0.08	1.50	0.040	0.040	2.00	19.00	9.00	-	-
CF-8M	0.08	1.50	0.040	0.040	2.00	19.50	10.00	2.5	-
CH-20	0.20	1.50	0.040	0.040	1.50	20.00	10.00	-	-
CK-20	0.20	2.00	0.040	0.040	2.00	25.00	20.00	-	-
HF	0.30	2.00	0.040	0.040	2.00	19.00	9.00	-	-
HH	0.35	2.00	0.040	0.040	2.00	25.00	12.00	-	0.2 N
HK	0.30	2.00	0.040	0.040	2.00	25.00	20.00	-	-

© The Hendrix Group, Inc., 1996
Email: hg@hghouston.com
Phone: (281) 556-8774
Fax: (281) 870-0659

Last Updated: Sunday, 13-Jun-99 12:31:34 CDT

(ALL REPORTED IN GALLONS)	JANUARY	FEBRUARY	MARCH	APRIL	MAY	JUNE	JULY	AUGUST	SEPTEMBER	OCTOBER	NOVEMBER	DECEMBER	TOTAL	ANNUAL 1998 AVERAGE	MAX
OUTFALL 101															
TOTAL FOR MONTH	0	12,200	81,580	0	35,250	556,150	269,490	98,120	178,040	1,482,140	0	0	2,712,970	226,081	1,482,140
AVE FOR MONTH	0	394	2,632	0	1,137	17,940	8,693	3,165	5,743	47,811	0	0	87,515	7,293	47,811
MAX FOR MONTH	0	8,600	40,040	0	19,680	462,000	124,000	20,150	97,000	1,464,000	0	0	2,235,470	186,289	1,464,000
OUTFALL 102															
TOTAL FOR MONTH	1,428,748	1,543,341	4,624,290	1,555,264	9,200,636	13,327,306	18,368,472	33,166,654	16,933,827	6,372,420	2,765,136	1,917,782	111,203,876	9,266,990	33,166,654
AVE FOR MONTH	46,089	49,785	149,171	51,842	296,795	444,244	592,531	1,069,892	564,461	205,562	92,171	61,864	3,624,406	302,034	1,069,892
MAX FOR MONTH	131,239	115,949	981,674	141,210	1,085,845	1,372,291	1,863,334	15,232,505	1,469,003	1,380,505	192,620	160,949	24,127,125	2,010,594	15,232,505
OUTFALL 001(Total Plant output)															
TOTAL FOR MONTH	1,428,748	1,555,541	4,705,870	1,555,264	9,235,886	13,883,456	18,637,962	33,264,774	17,111,867	7,854,560	2,765,136	1,917,782	113,916,846	9,493,071	33,264,774
AVE FOR MONTH	46,089	50,179	151,802	51,842	297,932	462,782	601,225	1,073,057	570,396	253,373	92,171	61,864	3,712,711	309,393	1,073,057
MAX FOR MONTH	131,239	115,949	1,021,714	141,210	1,090,295	1,373,041	1,868,854	15,232,595	1,474,393	2,844,505	192,620	160,959	25,647,375	2,137,281	15,232,595

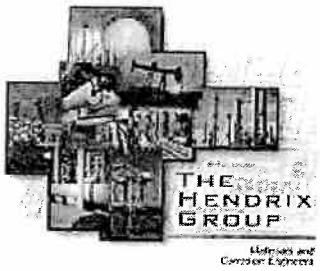

Seawater Resistance of Stainless Steels

Stainless steels are susceptible to crevice or pitting attack in chloride bearing waters. Their behavior has been studied by a number of investigators. There is considerable variation in the percentage of apparently identical sites where attack occurs, when it occurs. It is useful to describe results in terms of the percentage of apparently identical sites where attack occurs at a given chloride concentration. Very tight crevices increase the likelihood of attack. Rough surfaces, sheared edges, scratches and similar imperfections also tend to increase the incidence of attack. Crevice or pitting attack also occurs under deposits and under biofouling growths attached to the metal surface.

Relative resistance can be described by the chloride concentration below which there is little likelihood of crevice attack occurring. The ability of chlorides to concentrate in some crevices means that occasional attack may occur at lower concentrations than shown in the following table. Nevertheless, the table provides useful guidelines.

Guidelines for relative resistance of stainless steels to crevice attack in natural waters

Alloy	Chloride concentration below which crevice corrosion is rare
400 series:	crevice attack occurs in fresh waters
304SS:	100-200 ppm
316SS:	1000 ppm

The 4 1/2% Mo and duplex stainless steels are more resistant than type 316, but suffer varying degrees of crevice attack in brackish water and seawater.

The 6% Mo stainless steels have excellent resistance to crevice attack in seawater.

For further information: NiDI 11 003 "Guidelines for Selection of Stainless Steels for

Marine Environments, Natural Waters and Brines"

© The Hendrix Group, Inc., 1996
Email: hg@hghouston.com
Phone: (281) 556-8774
Fax: (281) 870-0659
Last Updated: Sunday, 13-Jun-99 12:31:42 CDT

Chuck,

Here are the corrosion rates for the coupons in the tower. The May '98 number reflect corrosion rates as a result of the acid excursion. Generally, we like to see copper and copper alloy corrosion rates of <0.3 mils per year and carbon steel corrosion rates of <3.0 mils per year. One mil = 1/1000th of an inch.

HCF Cooling Tower

	June '97	Sept '97	Dec '97	May '98	June '99
Copper	<0.1 mpy	<0.1 mpy	<0.1 mpy	1.2 mpy	<0.1 mpy
Carbon Steel	1.7 mpy	1.2 mpy	1.9 mpy	2.8 mpy	2.0 mpy
Carbon Steel	0.8 mpy	0.6 mpy	2.0 mpy	2.4 mpy	2.1 mpy

I've also attached corrosion rated taken from LG&E - Westmoreland - Hopewell's service water system. This system is just city make up water form Virginia American Water and is not treated. So this indicates the corrosivity of the city water make up, untreated. However, this is not representative of the corrosivity of the cooling water if it were untreated. This is because the cooling water cycles up and becomes more likely to form hardness deposits, rather than corrode metal. We actually treat more for scaling than corrosion as far as carbon steel is concerned. We do add a copper corrosion inhibitor to the tower. I hope this is not confusing.

LG&E Service Water

	Jan '97	June '98
Copper	0.2 mpy	0.6 mpy
Carbon Steel	5.8 mpy	7.6 mpy

Ron Hodge
Technical Specialist
BetzDearborn

HCF Cooling Tower

	June '97	Sept '97	Dec '97	May '98	June '99	Averages	Max	Min
Copper	<0.1 mpy	<0.1 mpy	<0.1 mpy	1.2 mpy	<0.1 mpy	0.32	1.2	0.1
Carbon Steel	1.7 mpy	1.2 mpy	1.9 mpy	2.8 mpy	2.0 mpy	1.92	**2.8**	1.2
Carbon Steel	0.8 mpy	0.6 mpy	2.0 mpy	2.4 mpy	2.1 mpy	1.58	2.4	**0.6**

LG&E Service Water

	Jan '97	June '98	Averages	Max	Min
Copper	0.2 mpy	0.6 mpy	0.4	0.6	0.2
Carbon Steel	5.8 mpy	7.6 mpy	6.7	**7.6**	5.8

Cooling Water Piping and Heat Exchangers:

Piping Run Name	Size in Inches(Dia)	Length of Run (Feet)	Area of Pipe (FT2)	Piping Material
Main Condenser and Return	54	370	5,230.8	Resin
Secondary Cooling loop to the GT's	36	120	1,131.0	Steel resin liner
Secondary Cooling loop to the GT's	24	346	2,174.0	Carbon Steel
Secondary cooling to the large coolers	10	120	314.2	Carbon Steel
Secondary cooling to the small coolers	8	100	209.4	Carbon Steel
Secondary cooling to closed cooling	4	70	73.3	Carbon Steel
Main Condenser (4 passes through condenser)			63,968.0	316 Stainless
Steam Turbine lube oil heat exchanger			Unknown	Carbon Steel
Closed Cooling water heat exchanger			570.0	Carbon Steel
GT lube oil heat exchangers			Unknown	Carbon Steel
GT generator heat exchangers			46.0	90/10 CuNi
4" valves (14)	4		1.2	316 disk
8" valves (14)	8		4.9	316 disk
10" valves (4)	10		2.2	316 disk
Pumps			0.1	316 parts

Case Study

Worst Case Scenario:

Worst corrosion rate(untreated service water on carbon steel)*	7.6	mills per year
Steel used with highest Chromium content is 316 stainless** ****	18%	
Closest to Density of 316 stainless is 304**	8.02	g/cm3
All Cooling pipe, valves, etc., made of 316 would corrode at highest rate	63,976.4	ft2
Cooling tower blowdown would be the same as 1998***	2,712,970	gallons
The amount that would corrode (square foot area times rate in mills)	40.52	ft3
convert to cubic centimeters	1,147,481	cm3
number of grams per cm3	9,202,794	grams
Amount of Chromium	1,656,503	grams
convert to milligrams	1,656,502,903	milligrams
convert gallons to liters	10,268,591	liters
convert to milligrams per liter	161.3174	PPM
convert corrosion resistance of carbon steel to SS 316****	**0.1613**	PPM

* Information supplied by BetzDearborn based on local area results over the past three years
** Tables / data taken from CRC "Handbook of Chemistry and Physics" 1992-1993 pages 12-147,148
*** Flow estimation data from Hopewell Cogeneration Facility 1998
**** Data provided by Hendrix Group Inc.

Cooling Water Piping and Heat Exchangers:

Piping Run Name	Size in Inches(Dia)	Length of Run (Feet)	Area of Pipe (FT2)	Piping Material
Main Condenser and Return	54	370	5,230.8	Resin
Secondary Cooling loop to the GT's	36	120	1,131.0	Steel resin liner
Secondary Cooling loop to the GT's	24	346	2,174.0	Carbon Steel
Secondary cooling to the large coolers	10	120	314.2	Carbon Steel
Secondary cooling to the small coolers	8	100	209.4	Carbon Steel
Secondary cooling to closed cooling	4	70	73.3	Carbon Steel
Main Condenser (4 passes through condenser)			63,968.0	316 Stainless
Steam Turbine lube oil heat exchanger			Unknown	Carbon Steel
Closed Cooling water heat exchanger			570.0	Carbon Steel
GT lube oil heat exchangers			Unknown	Carbon Steel
GT generator heat exchangers			46.0	90/10 CuNi
4" valves (14)	4		1.2	316 disk
8" valves (14)	8		4.9	316 disk
10" valves (4)	10		2.2	316 disk
Pumps			0.1	316 parts

Case Study

Worst Case Scenario: (based on highest corrosion rate at Hopewell)

Worst corrosion rate(untreated service water on carbon steel)*	2.8	mills per year
Steel used with highest Chromium content is 316 stainless** ****	18%	
Closest to Density of 316 stainless is 304**	8.02	g/cm3
All Cooling pipe, valves, etc., made of 316 would corrode at highest rate	63,976.4	ft2
Cooling tower blowdown would be the same as 1998***	2,712,970	gallons
The amount that would corrode (square foot area times rate in mills)	14.93	ft3
convert to cubic centimeters	422,756	cm3
number of grams per cm3	3,390,503	grams
Amount of Chromium	610,291	grams
convert to milligrams	610,290,543	milligrams
convert gallons to liters	10,268,591	liters
convert to milligrams per liter	59.4327	PPM
convert corrosion resistance of carbon steel to SS 316****	**0.0594**	PPM

* Information supplied by BetzDearborn based on local area results over the past three years
** Tables / data taken from CRC "Handbook of Chemistry and Physics" 1992-1993 pages 12-147,148
*** Flow estimation data from Hopewell Cogeneration Facility 1998
**** Data provided by Hendrix Group Inc.

Cooling Water Piping and Heat Exchangers:

Piping Run Name	Size in Inches(Dia)	Length of Run (Feet)	Area of Pipe (FT2)	Piping Material
Main Condenser and Return	54	370	5,230.8	Resin
Secondary Cooling loop to the GT's	36	120	1,131.0	Steel resin liner
Secondary Cooling loop to the GT's	24	346	2,174.0	Carbon Steel
Secondary cooling to the large coolers	10	120	314.2	Carbon Steel
Secondary cooling to the small coolers	8	100	209.4	Carbon Steel
Secondary cooling to closed cooling	4	70	73.3	Carbon Steel
Main Condenser (4 passes through condenser)			63,968.0	316 Stainless
Steam Turbine lube oil heat exchanger			Unknown	Carbon Steel
Closed Cooling water heat exchanger			570.0	Carbon Steel
GT lube oil heat exchangers			Unknown	Carbon Steel
GT generator heat exchangers			46.0	90/10 CuNi
4" valves (14)	4		1.2	316 disk
8" valves (14)	8		4.9	316 disk
10" valves (4)	10		2.2	316 disk
Pumps			0.1	316 parts

Case Study

Case Scenario: (best rate seen at Hopewell)		
Worst corrosion rate(untreated service water on carbon steel)*	0.6	mills per year
Steel used with highest Chromium content is 316 stainless** ****	18%	
Closest to Density of 316 stainless is 304**	8.02	g/cm3
All Cooling pipe, valves, etc., made of 316 would corrode at highest rate	63,976.4	ft2
Cooling tower blowdown would be the same as 1998***	2,712,970	gallons
The amount that would corrode (square foot area times rate in mills)	3.20	ft3
convert to cubic centimeters	90,591	cm3
number of grams per cm3	726,536	grams
Amount of Chromium	130,777	grams
convert to milligrams	130,776,545	milligrams
convert gallons to liters	10,268,591	liters
convert to milligrams per liter	12.7356	PPM
convert corrosion resistance of carbon steel to SS 316****	**0.0127**	PPM

* Information supplied by BetzDearborn based on local area results over the past three years
** Tables / data taken from CRC "Handbook of Chemistry and Physics" 1992-1993 pages 12-147,148
*** Flow estimation data from Hopewell Cogeneration Facility 1998
**** Data provided by Hendrix Group Inc.

YEAR	MONTH	CHROMIUM RESULTS	CHROMIUM % of 0.200 LIM.	ZINC RESULTS	ZINC % of 1.000 LIM.
1998	SUMMER	0.000	0.0%	0.03	3.0%
1997	NOVEMBER	0.005	2.5%	0.16	16.0%
1996	OCTOBER	0.009	4.5%	0.08	8.0%
1995	OCTOBER	0.000	0.0%	0.01	1.0%
1994	JANUARY	0.040	20.0%	NO DATA	
1994	DECEMBER	0.018	9.0%	0.05	5.0%
1993	MARCH	0.006	3.0%	0.39	39.0%
1993	SEPTEMBER	0.010	5.0%	0.16	16.0%
1991	FEBRUARY	0.000	0.0%	0.03	3.0%
1991	APRIL	0.000	0.0%	0.02	2.0%
1991	JULY	0.025	12.5%	0.07	7.0%
1991	DECEMBER	0.010	5.0%	0.07	7.0%
1990	NOVEMBER	0.000	0.0%	0.04	4.0%
	AVERAGES:	0.009	4.7%	0.09	9.3%
	MINIMUM	0.000	0.0%	0.01	1.0%
	MAXIMUM	0.040	20.0%	0.39	39.0%

CLIENT:	Hopewell Cogeneration Facility	SUBMITTED BY:	James R. Reed & Associates 11864 Canon Blvd., Suite 103 Newport News, VA 23606 (757) 873-4703 phone (757) 873-1498 fax			
ATTN:	Chuck Barnes					
ADDRESS:	1144 Hercules Road, P.O. Box 1039					
TY:	Hopewell, VA 23860					
PHONE:	804-458-0700	SAMPLE RECEIPT DATE:	8/11/99		IME:	1313
FAX:	804-458-0794					
		RECEIVED BY:	LRA			
		GRAB COLLECTION DATE:			GRAB TIME:	
SPECIAL NOTES: **Project ID: Annual Monitoring**		COMPOSITE COLLECTION:	Start Date	Start Time	End Date	End Time
			8/10/99	0723	8/11/99	0805
		COLLECTED BY:	Hopewell Cogeneration Facility			
		PICKED UP BY:	Julie Frankie - JRA			
		NUMBER OF CONTAINERS:	1		Condition	(X)GOOD ( )OTHER
		EXPLAIN				

SAMPLE ID: O/F 101

SAMPLE NO: 99-10259

Pres.	Parameter	Method Number	JRA Quantification Level (mg/L)*	Practical Quantitation Limit(mg/L)	Result (mg/L)	Analyst/Date/Time
HNO_3	Total Chromium	200.7	0.005		<0.005	FPE-08/13/99 @ 1341
O_3	Total Zinc	200.7	0.005		0.101	FPE-08/13/99 @ 1341

NOTES: *JRA Quantification Level is the concentration of the lowest calibration standard above zero with a reliable signal.

RESPECTFULLY SUBMITTED BY:

Elaine Claiborne

Elaine Claiborne
Laboratory Director

DATE: August 17, 1999

CHAIN OF CUSTODY

REED & ASSOCIATES

Company Name: Hopewell Cogeneration Facility
Company Contact: Chuck Barnes Telephone: 804-458-0700
Results To: Chuck Barnes Bill to:
Address: 1144 Hercules Road, P.O. Box 1039
Hopewell, VA 23860 FAX#804-458-0794
Project ID: Annual Monitoring

ANALYSES REQUESTED

JRA ID #	Sample Type*	Sample Location	Composite Start Date	Composite Start Time	Composite End Date	Composite End Time	Grab Date	Grab Time	# of Cont.	Total Cr, Zn
99 10259	WW	O/F 101	8/10/99	0723	8/10/99	0805			1	X

Preserv: 2

ONE FILTERED

* WW = Wastewater, GW = Groundwater, DW = Drinking Water, HW = Hazardous Waste, OTHERS

Sampled By: Chuck Barnes Date/Time: 8/11/99 0805
Relinquished By: Chuck Barnes Date/Time: 8/11/99 1035
Received By: Jm Franklin Date/Time: 8-11-99 1035
Relinquished By: Jm Franklin Date/Time: 8-11-99 1313
Received By: [illegible] Date/Time: 8-11-99 1313

Preservatives:

1-4 oC
2-HNO3
3-H2SO4
4-NaOH
5-Na2S2O3
6-Na2S2O3+HCl
7-NaOH+ZnOAc
8-H2SO4+FAS
9-NH4Cl

CN Interference Check:
Sulfide: Positive:_____ Negative:_____
Oxidizing Agent: Positive:_____ Negative:_____

ARRIVAL TEMP:_____

PLEASE F ON E IN THE UNSHADED AREAS ONLY. You may report some or all of this information on s ate sheets *(use the same format)* instead of completing these pages. SEE INSTRUCTIONS.

EPA I.D. NUMBER *(copy from Item I of Form 1)*

V. INTAKE AND EFFLUENT CHARACTERISTICS *(continued from page 3 of Form 2-C)*

OUTFALL NO. 101

PART A - You must provide the results of at least one analysis for every pollutant in this table. Complete one table for each outfall. See instructions for additional details.

1. POLLUTANT	2. EFFLUENT a. MAXIMUM DAILY VALUE (1) CONCENTRATION	(2) MASS	b. MAXIMUM 30 DAY VALUE *(if available)* (1) CONCENTRATION	(2) MASS	c. LONG TERM AVRG. VALUE *(if available)* (1) CONCENTRATION	(2) MASS	d. NO. OF ANALYSES	3. UNITS *(specify if blank)* a. CONCENTRATION	b. MASS	4. INTAKE *(optional)* a. LONG TERM AVERAGE VALUE (1) CONCENTRATION	(2) MASS	b. NO. OF ANALYSES
a. Biochemical Oxygen Demand *(BOD)*	<2.0	<8.0					1	PPM	LBS			
b. Chemical Oxygen Demand *(COD)*	<10.0	<40.0					1	PPM	LBS			
c. Total Organic Carbon *(TOC)*	2.8	11.2					1	PPM	LBS			
d. Total Suspended Solids *(TSS)*	<1.0	<4.0					1	PPM	LBS			
e. Ammonia *(as N)*	<0.2	<0.8					1	PPM	LBS			
f. Flow	VALUE 0.476		VALUE		VALUE 0.32		21	MGD	MGD	VALUE		
g. Temperature *(winter)*	VALUE 19.8		VALUE		VALUE		1	°C		VALUE		
h. Temperature *(summer)*	VALUE 32.2		VALUE		VALUE		1	°C		VALUE		
i. pH	MINIMUM 8.47	MAXIMUM 9.01	MINIMUM	MAXIMUM			41	STANDARD UNITS				

PART B - Mark "X" in column 2-a for each pollutant you know or have reason to believe is present. Mark "X" in column 2-b for each pollutant you believe to be absent. If you mark column 2a for any pollutant which is limited either directly, or indirectly but expressly, in an effluent limitations guideline, you must provide the results of at least one analysis for that pollutant. For other pollutants for which you mark column 2a, you must provide quantitative data or an explanation of their presence in your discharge. Complete one table for each outfall. See the instructions for additional details and requirements.

1. POLLUTANT AND CAS NO. *(if available)*	2. MARK "X" a. BELIEVED PRESENT	b. BELIEVED ABSENT	3. EFFLUENT a. MAXIMUM DAILY VALUE (1) CONCENTRATION	(2) MASS	b. MAXIMUM 30 DAY VALUE *(if available)* (1) CONCENTRATION	(2) MASS	c. LONG TERM AVRG. VALUE *(if available)* (1) CONCENTRATION	(2) MASS	d. NO. OF ANALYSES	4. UNITS a. CONCENTRATION	b. MASS	5. INTAKE *(optional)* a. LONG TERM AVERAGE VALUE (1) CONCENTRATION	(2) MASS	b. NO. OF ANALYSES
a. Bromide (24959-67-9)		X	BELOW DETECTION LIMITS						1	PPM	LBS			
b. Chlorine, Total Residual	X		0.2	0.79			0.08	0.21	30	PPM	LBS			
c. Color		X							0					
d. Fecal Coliform		X							0					
e. Fluoride (16984-48-8)		X							0					
f. Nitrate-Nitrite *(as N)*	X		0.407	0.16					1	PPM	LBS			

CONTINUE ON REVERSE

ANT AN CAS NO. (if available)			a. MAXIMUM DAILY VALUE (1) CONCENTRATION	(2) MASS	b. MAXIMUM 30 DAY VALUE (if available) (1) CONCENTRATION	(2) MASS	c. AVRG. VALUE (if available) CONCENTRATION	(2) MASS	d. NO. OF ANALYSES	4. UNITS a. CONCENTRATION	b. MASS	5. INTAKE (optional) a. LONG TERM AVERAGE (1) CONCENTRATION	(2) MASS	b. NO. OF ANALYSES
g. Nitrogen, Total Organic (as N)	X		2.28	9.03					1	PPM	LBS			
h. Oil and Grease	X		2.0	8.0					1	PPM	LBS			
i. Phosphorus (as P), Total (7723-14-0)	X		0.15	0.59					1	PPM	LBS			
j. Radioactivity														
(1) Alpha, Total		X							0					
(2) Beta, Total		X							0					
(3) Radium, Total		X							0					
(4) Radium 226, Total		X							0					
k. Sulfate (as SO_4) (14808-79-8)	X		64.5	258					1	PPM	LBS			
l. Sulfide (as S)	X		BELOW DETECTION LIMITS						1	PPM	LBS			
m. Sulfite (as SO_3) (14265-45-3)	X		BELOW DETECTION LIMITS						1	PPM	LBS			
n. Surfactants	X		0.025	0.10					1	PPM	LBS			
o. Aluminum, Total (7429-90-5)	X		0.101	0.40					1	PPM	LBS			
p. Barium, Total (7440-39-3)	X		0.054	0.20					1	PPM	LBS			
q. Boron, Total (7440-42-8)		X							0					
r. Cobalt, Total (7440-48-4)		X							0					
s. Iron, Total (7439-89-6)	X		0.162	0.62					1	PPM	LBS			
t. Magnesium, Total (7439-95-4)	X		5.92	23.6					1	PPM	LBS			
u. Molybdenum, Total (7439-98-7)	X		0.007	0.03					1	PPM	LBS			
v. Manganese, Total (7439-96-5)	X		0.037	0.15					1	PPM	LBS			
w. Tin, Total (7440-31-5)		X							0					
x. Titanium, Total (7440-32-6)		X							0					

CONTINUE ON PAGE V-3

EPA I.D. NUMBER (copy from It	I) OUTFALL NUMBER
	101

CONTINUED FROM PAGE 3 OF FORM 2-C

PART C - If you are a primary industry and this outfall contains process wastewater, refer to Table 2c-2 in the instructions to determine which of the GC/MS fractions you must test for. Mark "X" in column 2-a for all such GC/MS fractions that apply to your industry and for ALL toxic metals, cyanides, and total phenols. If you are not required to mark column 2-a *(secondary industries, nonprocess wastewater outfalls, and nonrequired GC/MS fractions)*, mark "X" in column 2-b for each pollutant you know or have reason to believe is present. Mark "X" in column 2-c for each pollutant you believe is absent. If you mark column 2a for any pollutant, you must provide the results of at least one analysis for that pollutant. If you mark column 2b for any pollutant, you must provide the results of at least one analysis for that pollutant if you know or have reason to believe it will be discharged in concentrations of 10 ppb or greater. If you mark column 2b for acrolein, acrylonitrile, 2,4 dinitrophenol, or 2-methyl-4, 6 dinitrophenol, you must provide the results of at least one analysis for each of these pollutants which you know or have reason to believe that you discharge in concentrations of 100 ppb or greater. Otherwise, for pollutants for which you mark column 2b, you must either submit at least one analysis or briefly describe the reasons the pollutant is expected to be discharged. Note that there are 7 pages to this part; please review each carefully. Complete one table *(all 7 pages)* for each outfall. See instructions for additional details and requirements.

1. POLLUTANT AND CAS NUMBER (if available)	2. MARK "X"			3. EFFLUENT							4. UNITS		5. INTAKE (optional)		
	a. TESTING REQUIRED	b. BELIEVED PRESENT	c. BELIEVED ABSENT	a. MAXIMUM DAILY VALUE (1) CONCENTRATION	a. MAXIMUM DAILY VALUE (2) MASS	b. MAXIMUM 30 DAY VALUE (if available) (1) CONCENTRATION	b. MAXIMUM 30 DAY VALUE (if available) (2) MASS	c. LONG TERM AVRG. VALUE (if available) (1) CONCENTRATION	c. LONG TERM AVRG. VALUE (if available) (2) MASS	d. NO. OF ANALYSES	a. CONCENTRATION	b. MASS	a. LONG TERM AVERAGE VALUE (1) CONCENTRATION	a. LONG TERM AVERAGE VALUE (2) MASS	b. NO. OF ANALYSES
METALS, CYANIDE, AND TOTAL PHENOLS															
1M. Antimony, Total (7440-36-0)	X			BELOW DETECTION LIMITS						1	PPM	LBS			
2M. Arsenic, Total (7440-38-2)	X			BELOW DETECTION LIMITS						1	PPM	LBS			
3M. Beryllium, Total, 7440-41-7)	X			BELOW DETECTION LIMITS						1	PPM	LBS			
4M. Cadmium, Total (7440-43-9)	X			BELOW DETECTION LIMITS						1	PPM	LBS			
5M. Chromium, Total (7440-47-3)	X			BELOW DETECTION LIMITS						1	PPM	LBS			
6M. Copper, Total (7440-50-8)	X			BELOW DETECTION LIMITS						1	PPM	LBS			
7M. Lead, Total (7439-92-1)	X			BELOW DETECTION LIMITS						1	PPM	LBS			
8M. Mercury, Total (7439-97-6)	X			BELOW DETECTION LIMITS						1	PPM	LBS			
9M. Nickel, Total (7440-02-0)	X			BELOW DETECTION LIMITS						1	PPM	LBS			
10M. Selenium, Total (7782-49-2)	X			BELOW DETECTION LIMITS						1	PPM	LBS			
11M. Silver, Total (7440-22-4)	X			BELOW DETECTION LIMITS						1	PPM	LBS			
12M. Thallium, Total (7440-28-0)			X							0					
13M. Zinc, Total (7440-66-6)	X			0.0285	0.114					1	PPM	LBS			
14M. Cyanide, Total (57-12-5)	X			0.005	0.02					1	PPM	LBS			
15M. Phenols, Total	X			BELOW DETECTION LIMITS						1	PPM	LBS			
DIOXIN															
2,3,7,8-Tetrachlorodibenzo-P-Dioxin (1764-01-6)			X	DESCRIBE RESULTS											

CONTINUE ON REVERSE

1. POLLUTANT AND CAS NUMBER (if available)	2. MARK "X" a. REQUIRED	b. BELIEVED PRESENT	c. BELIEVED ABSENT	3. EFFLUENT a. MAXIMUM DAILY VALUE (1) CONCENTRATION	(2) MASS	b. MAXIMUM 30 DAY VALUE (if available) (1) CONCENTRATION	(2) MASS	LONG TERM AVRG. VALUE (if available) (1) CONCENTRATION	(2) MASS	d. NO. OF ANALYSES	4. UNITS a. CONCENTRATION	b. MASS	5. INTAKE (optional) a. LONG TERM AVERAGE VALUE (1) CONCENTRATION	(2) MASS	b. NO. OF ANALYSES
GC/MS FRACTION – VOLATILE COMPOUNDS															
1V. Acrolein (107-02-8)	X			BELOW DETECTION LIMITS						1	PPM	LBS			
2V. Acrylonitrile (107-13-1)	X			BELOW DETECTION LIMITS						1	PPM	LBS			
3V. Benzene (71-43-2)	X			BELOW DETECTION LIMITS						1	PPM	LBS			
4V. Bis (Chloromethyl) Ether (542-88-1)	X			BELOW DETECTION LIMITS						1	PPM	LBS			
5V. Bromoform (75-25-2)	X			BELOW DETECTION LIMITS						1	PPM	LBS			
6V. Carbon Tetrachloride (56-23-5)	X			BELOW DETECTION LIMITS						1	PPM	LBS			
7V. Chlorobenzene (108-90-7)	X			BELOW DETECTION LIMITS						1	PPM	LBS			
8V. Chlorodibromomethane (124-48-1)	X			BELOW DETECTION LIMITS						1	PPM	LBS			
9V. Chloroethane (75-00-3)	X			BELOW DETECTION LIMITS						1	PPM	LBS			
10V. 2-Chloroethylvinyl Ether (110-75-8)	X			BELOW DETECTION LIMITS						1	PPM	LBS			
11V. Chloroform (67-66-3)	X			0.024	0.096					1	PPM	LBS			
12V. Dichlorobromomethane (75-27-4)	X			0.0192	0.077					1	PPM	LBS			
13V. Dichlorodifluoromethane (75-71-8)	X			BELOW DETECTION LIMITS						1	PPM	LBS			
14V. 1,1-Dichloroethane (75-34-3)	X			BELOW DETECTION LIMITS						1	PPM	LBS			
15V. 1,2-Dichloroethane (107-06-2)	X			BELOW DETECTION LIMITS						1	PPM	LBS			
16V. 1,1-Dichloroethylene (75-35-4)	X			BELOW DETECTION LIMITS						1	PPM	LBS			
17V. 1,2-Dichloropropane (78-87-5)	X			BELOW DETECTION LIMITS						1	PPM	LBS			
18V. 1,3-Dichloropropylene (542-75-6)	X			BELOW DETECTION LIMITS						1	PPM	LBS			
19V. Ethylbenzene (100-41-4)	X			BELOW DETECTION LIMITS						1	PPM	LBS			
20V. Methyl Bromide (74-83-9)	X			BELOW DETECTION LIMITS						1	PPM	LBS			
21V. Methyl Chloride (74-87-3)	X			BELOW DETECTION LIMITS						1	PPM	LBS			

CONTINUE ON PAGE

CONTINUED

E V-4

1. POLLUTANT AND CAS NUMBER (if available)	MARK 'X' a. TESTING REQUIRED	b. BELIEVED PRESENT	c. BELIEVED ABSENT	3. EFFLU a. MAXIMUM DAILY VALUE (1) CONCENTRATION	(2) MASS	b. MAXIMUM 30 DAY VALUE (if available) (1) CONCENTRATION	(2) MASS	c. LONG TERM AVRG. VALUE (if available) (1) CONCENTRATION	(2) MASS	d. NO. OF ANALYSES	4. UNITS a. CONCENTRATION	b. MASS	AKE (optional) a. LONG TERM AVERAGE VALUE (1) CONCENTRATION	(2) MASS	b. NO. OF ANALYSES
GC/MS FRACTION — VOLATILE COMPOUNDS *(continued)*															
22V. Methylene Chloride (75-09-2)	X			BELOW DETECTION LIMITS						1	PPM	LBS			
23V. 1,1,2,2-Tetrachloroethane (79-34-5)	X			BELOW DETECTION LIMITS						1	PPM	LBS			
24V. Tetrachloroethylene (127-18-4)	X			BELOW DETECTION LIMITS						1	PPM	LBS			
25V. Toluene (108-88-3)	X			BELOW DETECTION LIMITS						1	PPM	LBS			
26V. 1,2-Trans-Dichloroethylene (156-60-5)	X			BELOW DETECTION LIMITS						1	PPM	LBS			
27V. 1,1,1-Trichloroethane (71-55-6)	X			BELOW DETECTION LIMITS						1	PPM	LBS			
28V. 1,1,2-Trichloroethane (79-00-5)	X			BELOW DETECTION LIMITS						1	PPM	LBS			
29V. Trichloroethylene (79-01-6)	X			BELOW DETECTION LIMITS						1	PPM	LBS			
30V. Trichlorofluoromethane (75-69-4)	X			BELOW DETECTION LIMITS						1	PPM	LBS			
31V. Vinyl Chloride (75-01-4)	X			BELOW DETECTION LIMITS						1	PPM	LBS			
GC/MS FRACTION — ACID COMPOUNDS															
1A. 2-Chlorophenol (95-57-8)	X			BELOW DETECTION LIMITS						1	PPM	LBS			
2A. 2,4-Dichlorophenol (120-83-2)	X			BELOW DETECTION LIMITS						1	PPM	LBS			
3A. 2,4-Dimethylphenol (105-67-9)	X			BELOW DETECTION LIMITS						1	PPM	LBS			
4A. 4,6-Dinitro-O-Cresol (534-52-1)	X			BELOW DETECTION LIMITS						1	PPM	LBS			
5A. 2,4-Dinitrophenol (51-28-5)	X			BELOW DETECTION LIMITS						1	PPM	LBS			
6A. 2-Nitrophenol (88-75-5)	X			BELOW DETECTION LIMITS						1	PPM	LBS			
7A. 4-Nitrophenol (100-02-7)	X			BELOW DETECTION LIMITS						1	PPM	LBS			
8A. P-Chloro-M-Cresol (59-50-7)	X			BELOW DETECTION LIMITS						1	PPM	LBS			
9A. Pentachlorophenol (87-86-5)	X			BELOW DETECTION LIMITS						1	PPM	LBS			
10A. Phenol (108-95-2)	X			BELOW DETECTION LIMITS						1	PPM	LBS			
11A. 2,4,6-Trichlorophenol	X			BELOW DETECTION LIMITS						1	PPM	lbs			

1. POLLUTANT AND CAS NUMBER (if available)	2. MARK "X" a. TESTING REQUIRED	b. BELIEVED PRESENT	c. BELIEVED ABSENT	3. EFFLUENT a. MAXIMUM DAILY VALUE (1) CONCENTRATION	(2) MASS	b. MAXIMUM 30 DAY VALUE (if available) (1) CONCENTRATION	(2) MASS	c. LONG TERM AVRG. VALUE (if available) (1) CONCENTRATION	(2) MASS	d. NO. OF ANALYSES	4. UNITS a. CONCENTRATION	b. MASS	5. INTAKE (optional) a. LONG TERM AVERAGE VALUE (1) CONCENTRATION	(2) MASS	b. NO. OF ANALYSES
GC/MS FRACTION — BASE/NEUTRAL COMPOUNDS															
1B. Acenaphthene (83-32-9)	X			BELOW DETECTION LIMITS						1	PPM	LBS			
2B. Acenaphtylene (208-96-8)	X			BELOW DETECTION LIMITS						1	PPM	LBS			
3B. Anthracene (120-12-7)	X			BELOW DETECTION LIMITS						1	PPM	LBS			
4B. Benzidine (92-87-5)	X			BELOW DETECTION LIMITS						1	PPM	LBS			
5B. Benzo (a) Anthracene (56-55-3)	X			BELOW DETECTION LIMITS						1	PPM	LBS			
6B. Benzo (a) Pyrene (50-32-8)	X			BELOW DETECTION LIMITS						1	PPM	LBS			
7B. 3,4-Benzo-fluoranthene (205-99-2)	X			BELOW DETECTION LIMITS						1	PPM	LBS			
8B. Benzo (ghi) Perylene (191-24-2)	X			BELOW DETECTION LIMITS						1	PPM	LBS			
9B. Benzo (k) Fluoranthene (207-08-9)	X			BELOW DETECTION LIMITS						1	PPM	LBS			
10B. Bis (2-Chloroethoxy) Methane (111-91-1)	X			BELOW DETECTION LIMITS						1	PPM	LBS			
11B. Bis (2-Chloroethyl) Ether (111-44-4)	X			BELOW DETECTION LIMITS						1	PPM	LBS			
12B. Bis (2-Chloroisopropyl) Ether (102-60-1)	X			BELOW DETECTION LIMITS						1	PPM	LBS			
13B. Bis (2-Ethylhexyl) Phthalate (117-81-7)	X			BELOW DETECTION LIMITS						1	PPM	LBS			
14B. 4-Bromophenyl Phenyl Ether (101-55-3)	X			BELOW DETECTION LIMITS						1	PPM	LBS			
15B. Butyl Benzyl Phthalate (85-68-7)	X			BELOW DETECTION LIMITS						1	PPM	LBS			
16B. 2-Chloronaphthalene (91-58-7)	X			BELOW DETECTION LIMITS						1	PPM	LBS			
17B. 4-Chlorophenyl Phenyl Ether (7005-72-3)	X			BELOW DETECTION LIMITS						1	PPM	LBS			
18B. Chrysene (218-01-9)	X			BELOW DETECTION LIMITS						1	PPM	LBS			
19B. Dibenzo (a,h) Anthracene (53-70-3)	X			BELOW DETECTION LIMITS						1	PPM	LBS			
20B. 1,2-Dichlorobenzene (95-50-1)	X			BELOW DETECTION LIMITS						1	PPM	LBS			
21B. 1,3-Dichlorobenzene (541-73-1)	X			BELOW DETECTION LIMITS						1	PPM	LBS			

CONTINUE ON PAGE

CONTINUED FROM PAGE V-6

1. POLLUTANT AND CAS NUMBER (if available)	2. MARK 'X' a. TESTING REQUIRED	b. BELIEVED PRESENT	c. BELIEVED ABSENT	3. EFFLUENT a. MAXIMUM DAILY VALUE (1) CONCENTRATION	(2) MASS	b. MAXIMUM 30 DAY VALUE (if available) (1) CONCENTRATION	(2) MASS	c. LONG TERM AVRG. VALUE (if available) (1) CONCENTRATION	(2) MASS	d. NO. OF ANALYSES	4. UNITS a. CONCENTRATION	b. MASS	5. INTAKE (optional) a. LONG TERM AVERAGE VALUE (1) CONCENTRATION	(2) MASS	b. NO. ANALYSES
GC/MS FRACTION — BASE/NEUTRAL COMPOUNDS *(continued)*															
22B. 1,4-Dichlorobenzene (106-46-7)	X			BELOW DETECTION LIMITS						1	PPM	LBS			
23B. 3,3'-Dichlorobenzidine (91-94-1)	X			BELOW DETECTION LIMITS						1	PPM	LBS			
24B. Diethyl Phthalate (84-66-2)	X			BELOW DETECTION LIMITS						1	PPM	LBS			
25B. Dimethyl Phthalate (131-11-3)	X			BELOW DETECTION LIMITS						1	PPM	LBS			
26B. Di-N-Butyl Phthalate (84-74-2)	X			BELOW DETECTION LIMITS						1	PPM	LBS			
27B. 2,4-Dinitrotoluene (121-14-2)	X			BELOW DETECTION LIMITS						1	PPM	LBS			
28B. 2,6-Dinitrotoluene (606-20-2)	X			BELOW DETECTION LIMITS						1	PPM	LBS			
29B. Di-N-Octyl Phthalate (117-84-0)	X			BELOW DETECTION LIMITS						1	PPM	LBS			
30B. 1,2-Diphenylhydrazine *(as Azobenzene)* (122-66-7)	X			BELOW DETECTION LIMITS						1	PPM	LBS			
31B. Fluoranthene (206-44-0)	X			BELOW DETECTION LIMITS						1	PPM	LBS			
32B. Fluorene (86-73-7)	X			BELOW DETECTION LIMITS						1	PPM	LBS			
33B. Hexachlorobenzene (118-74-1)	X			BELOW DETECTION LIMITS						1	PPM	LBS			
34B. Hexachlorobutadiene (87-68-3)	X			BELOW DETECTION LIMITS						1	PPM	LBS			
35B. Hexachlorocyclopentadiene (77-47-4)	X			BELOW DETECTION LIMITS						1	PPM	LBS			
36B. Hexachloroethane (67-72-1)	X			BELOW DETECTION LIMITS						1	PPM	LBS			
37B. Indeno *(1,2,3-cd)* Pyrene (193-39-5)	X			BELOW DETECTION LIMITS						1	PPM	LBS			
38B. Isophorone (78-59-1)	X			BELOW DETECTION LIMITS						1	PPM	LBS			
39B. Naphthalene (91-20-3)	X			BELOW DETECTION LIMITS						1	PPM	LBS			
40B. Nitrobenzene (98-95-3)	X			BELOW DETECTION LIMITS						1	PPM	LBS			
41B. N-Nitrosodimethylamine (62-75-9)	X			BELOW DETECTION LIMITS						1	PPM	LBS			
42B. N-Nitrosodi-N-Propylamine (621-64-7)	X			BELOW DETECTION LIMITS						1	PPM	LBS			

Outfall 101

1. POLLUTANT AND CAS NUMBER (if available)	MARK 'X' a. TESTING REQUIRED	b. BELIEVED PRESENT	c. BELIEVED ABSENT	3. EFFLUENT a. MAXIMUM DAILY VALUE (1) CONCENTRATION	(2) MASS	b. MAXIMUM 30 DAY VALUE (if available) (1) CONCENTRATION	(2) MASS	c. LONG TERM AVRG. VALUE (if available) (1) CONCENTRATION	(2) MASS	d. NO. OF ANALYSES	4. UNITS a. CONCENTRATION	b. MASS	5. INTAKE (optional) a. LONG TERM AVERAGE VALUE (1) CONCENTRATION	(2) MASS	b. NO. OF ANALYSES
GC/MS FRACTION – BASE/NEUTRAL COMPOUNDS *(continued)*															
43B. N-Nitrosodiphenylamine (86-30-6)	X			BELOW DETECTION LIMITS						1	PPM	LBS			
44B. Phenanthrene (85-01-8)	X			BELOW DETECTION LIMITS						1	PPM	LBS			
45B. Pyrene (129-00-0)	X			BELOW DETECTION LIMITS						1	PPM	LBS			
46B. 1,2,4-Trichlorobenzene (120-82-1)	X			BELOW DETECTION LIMITS						1	PPM	LBS			
GC/MS FRACTION – PESTICIDES															
1P. Aldrin (309-00-2)	X			BELOW DETECTION LIMITS						1	PPM	LBS			
2P. α-BHC (319-84-6)	X			BELOW DETECTION LIMITS						1	PPM	LBS			
3P. β-BHC (319-85-7)	X			BELOW DETECTION LIMITS						1	PPM	LBS			
4P. γ-BHC (58-89-9)	X			BELOW DETECTION LIMITS						1	PPM	LBS			
5P. δ-BHC (319-86-8)			X							0					
6P. Chlordane (57-74-9)	X			BELOW DETECTION LIMITS						1	PPM	LBS			
7P. 4,4'-DDT (50-29-3)	X			BELOW DETECTION LIMITS						1	PPM	LBS			
8P. 4,4'-DDE (72-55-9)	X			BELOW DETECTION LIMITS						1	PPM	LBS			
9P. 4,4'-DDD (72-54-8)	X			BELOW DETECTION LIMITS						1	PPM	LBS			
10P. Dieldrin (60-57-1)	X			BELOW DETECTION LIMITS						1	PPM	LBS			
11P. α-Endosulfan (115-29-7)	X			BELOW DETECTION LIMITS						1	PPM	LBS			
12P. β-Endosulfan (115-29-7)	X			BELOW DETECTION LIMITS						1	PPM	LBS			
13P. Endosulfan Sulfate (1031-07-8)	X			BELOW DETECTION LIMITS						1	PPM	LBS			
14P. Endrin (72-20-8)	X			BELOW DETECTION LIMITS						1	PPM	LBS			
15P. Endrin Aldehyde (7421-93-4)	X			BELOW DETECTION LIMITS						1	PPM	LBS			
16P. Heptachlor (76-44-8)	X			BELOW DETECTION LIMITS						1	PPM	LBS			

CONTINUE ON PAGE V-9

CONTINUE E V-8

101

1. POLLUTANT AND CAS NUMBER (if available)	MARK 'X' a. TESTING REQUIRED	b. BELIEVED PRESENT	c. BELIEVED ABSENT	3. EFFLUENT a. MAXIMUM DAILY VALUE (1) CONCENTRATION	(2) MASS	b. MAXIMUM 30 DAY VALUE (if available) (1) CONCENTRATION	(2) MASS	c. LONG TERM AVRG. VALUE (if available) (1) CONCENTRATION	(2) MASS	d. NO. OF ANALYSES	4. UNITS a. CONCENTRATION	b. MASS	5. AKE (optional) a. LONG TERM AVERAGE VALUE (1) CONCENTRATION	(2) MASS	b. NO. OF ANALYSES
GC/MS FRACTION – PESTICIDES *(continued)*															
17P. Heptachlor Epoxide (1024-57-3)	X			BELOW DETECTION LIMITS						1	PPM	LBS			
18P. PCB-1242 (53469-21-9)	X			BELOW DETECTION LIMITS						1	PPM	LBS			
19P. PCB-1254 (11097-69-1)	X			BELOW DETECTION LIMITS						1	PPM	LBS			
20P. PCB-1221 (11104-28-2)	X			BELOW DETECTION LIMITS						1	PPM	LBS			
21P. PCB-1232 (11141-16-5)	X			BELOW DETECTION LIMITS						1	PPM	LBS			
22P. PCB-1248 (12672-29-6)	X			BELOW DETECTION LIMITS						1	PPM	LBS			
23P. PCB-1260 (11096-82-5)	X			BELOW DETECTION LIMITS						1	PPM	LBS			
24P. PCB-1016 (12674-11-2)	X			BELOW DETECTION LIMITS						1	PPM	LBS			
25P. Toxaphene (8001-35-2)	X			BELOW DETECTION LIMITS						1	PPM	LBS			

SUBMITTED TO:

Hopewell Cogeneration Facility
ATTN: Chris Wisniewski
1114 Hercules Road
Hopewell, VA 23860

Submitted by:

James R. Reed & Associates, Inc.
11864 Canon Blvd., Suite 103
Newport News, VA 23606

Respectfully,

Beverly E. Blanchard
for Carol Isenhour
Vice President

April 26, 1993 (REVISED)
Original: April 19, 1993

JRA/jsc

Turbine
Wash water
Checked
for Toxics
but not for metals.

Sample Received:	03/26/93 @ 18:40	04/02/93 @ 14:50	03/30/93 @ 15:30	03/31/93 @ 16:35
Grab Collected:	03/26/93 @ 15:00	04/02/93	03/30/93 @ 12:15	03/31/93 @ 15:08
Composite Collected:	03/25 - 26/93 @ 15:00	04/01 - 02/93 @ 09:14	03/29 - 30/93 @ 12:15	03/30 - 31/93 @ 15:08
Sample Identification:	Outfall 001	Outfall 001	Outfall 101	Outfall 102
JRA Sample ID:	**93-2474**	**93-2652**	**93-2583**	**93-2610**
(Results in mg/L)				
BOD_5	1.40	8.8	1.40	1.5
Total Organic Carbon	2	16	9	3
COD	<20	45	26	<20
Nitrate/Nitrite	0.25	0.31	1.65	0.13
Total Phosphorus	0.09	0.04	0.37	0.07
Total Organic Nitrogen	<0.5	1.1	0.8	<0.5
Ammonia	<0.1	<0.1	<0.1	<0.1
Total Kjeldahl Nitrogen	<0.5	1.1	0.8	<0.5
Bromide	<0.1	*	<0.1	<0.1
Sulfate	26	*	34	24
Cyanide	<0.005	*	<0.005	<0.005
Total Phenolic Compounds	0.01	*	0.02	<0.01
Sulfide	0.9	*	0.5	0.4
Sulfite	<2	*	<2	<2
Surfactants	0.078	0.032	<0.025	<0.025
METALS (mg/L)				
Antimony	<0.005	*	<0.005	<0.005
Arsenic	<0.001	*	<0.001	<0.001
Beryllium	<0.0005	*	<0.0005	<0.0005
Cadmium	0.0006	*	0.0005	0.0002
Copper	0.016	*	0.056	0.012
Lead	0.002	*	0.002	0.003
Mercury	<0.0002	*	<0.0002	<0.0002
Nickel	0.002	*	0.012	0.002
Selenium	<0.002	*	<0.002	0.005
Silver	0.0004	*	0.0004	<0.0002
Thallium	<0.005	*	<0.005	<0.005
Aluminum	<0.1	*	<0.1	<0.1
Barium	<0.1	*	<0.1	<0.1
Magnesium	1.8	*	6.3	1.7
Molybdenum	<0.1	*	<0.1	<0.1
Manganese	<0.01	*	0.05	<0.01
Chromium	0.005	*	0.006	0.001
Zinc	0.02	*	0.39	0.06
Iron	0.1	*	0.7	0.1

* Analysis not requested.

Sample Identification:	Outfall 001	Outfall 001	Outfall 101	Outfall 102
JRA Sample ID:	92-2474	92-2652	92-2583	93-2610

VOLATILES (mg/L)

Chloromethane[1]	<0.010	<0.010	<0.010	<0.010
Bromomethane[1]	<0.010	<0.010	<0.010	<0.010
Vinyl Chloride[1]	<0.010	<0.010	<0.010	<0.010
Chloroethane[1]	<0.010	<0.010	<0.010	<0.010
Methylene Chloride	<0.005	<0.005	<0.005	<0.005
Trichlorofluoromethane	<0.005	<0.005	<0.005	<0.005
1,1-Dichloroethene	<0.005	<0.005	<0.005	<0.005
1,1-Dichloroethane	<0.005	<0.005	<0.005	<0.005
trans-1,2-Dichloroethene	<0.005	<0.005	<0.005	<0.005
Chloroform	0.025	0.028	<0.005	0.021
1,2-Dichloroethane	<0.005	<0.005	<0.005	<0.005
1,1,1-Trichloroethane	<0.005	<0.005	<0.005	<0.005
Carbon Tetrachloride	<0.005	<0.005	<0.005	<0.005
Bromodichloromethane	<0.005	<0.005	<0.005	<0.005
1,1,2,2-Tetrachloroethane	<0.005	<0.005	<0.005	<0.005
1,2-Dichloropropane	<0.005	<0.005	<0.005	<0.005
trans-1,3-Dichloropropene	<0.005	<0.005	<0.005	<0.005
Trichloroethene	<0.005	<0.005	<0.005	<0.005
Dibromochloromethane	<0.005	<0.005	<0.005	<0.005
1,1,2-Trichloroethane	<0.005	<0.005	<0.005	<0.005
Benzene	<0.005	<0.005	<0.005	<0.005
s-1,3-Dichloropropene	<0.005	<0.005	<0.005	<0.005
-Chloroethylvinyl Ether[1]	<0.010	<0.010	<0.010	<0.010
Bromoform	<0.005	<0.005	<0.005	<0.005
Tetrachloroethene	<0.005	<0.005	<0.005	<0.005
Toluene	<0.005	<0.005	<0.005	<0.005
Chlorobenzene	<0.005	<0.005	<0.005	<0.005
Ethylbenzene	<0.005	<0.005	<0.005	<0.005
Acrolein[2]	<0.100	<0.100	<0.100	<0.100
Acrylonitrile[2]	<0.100	<0.100	<0.100	<0.100

Volatiles Library Search showed one major peak as follows:
cyclohexane, 1-ethyl-2-methyl for sample 93-2610 (Outfall 102)

EPA Method: EPA 624
Method Detection Limit: 0.005 mg/L, [1]0.010 mg/L, [2]0.100 mg/L
Analyst/Date/Time: CP-03/31/93 @ 21:06, 04/01/93 @ 17:13, 20:39, 04/06/93 @ 18:01

Sample Identification:	Outfall 001	Outfall 001	Outfall 101	Outfall 102
JRA Sample ID:	**93-2474**	**93-2652**	**93-2583**	**93-2610**

BASE NEUTRALS (mg/L)

N-nitrosodimethylamine	<0.005	<0.005	<0.005	<0.005
Bis (2-chloroethyl) ether	<0.005	<0.005	<0.005	<0.005
1,3-dichlorobenzene	<0.005	<0.005	<0.005	<0.005
1,4-dichlorobenzene	<0.005	<0.005	<0.005	<0.005
1,2-dichlorobenzene	<0.005	<0.005	<0.005	<0.005
Bis (2-chloroisopropyl) ether	<0.005	<0.005	<0.005	<0.005
Hexachloroethane	<0.005	<0.005	<0.005	<0.005
N-nitroso-di-n-propylamine	<0.005	<0.005	<0.005	<0.005
Nitrobenzene	<0.005	<0.005	<0.005	<0.005
Isophorone	<0.005	<0.005	<0.005	<0.005
Bis (2-Chloroethoxy) methane	<0.005	<0.005	<0.005	<0.005
1,2,4-trichlorobenzene	<0.005	<0.005	<0.005	<0.005
Napthalene	<0.005	<0.005	<0.005	<0.005
Hexachlorobutadiene	<0.005	<0.005	<0.005	<0.005
Hexachlorocyclopentadiene	<0.005	<0.005	<0.005	<0.005
2-chloronapthalene	<0.005	<0.005	<0.005	<0.005
Acenapthylene	<0.005	<0.005	<0.005	<0.005
Dimethyl phthalate	<0.005	<0.005	<0.005	<0.005
2,6-dinitrotoluene	<0.005	<0.005	<0.005	<0.005
Acenapthene	<0.005	<0.005	<0.005	<0.005
2,4-dinitrotoluene	<0.005	<0.005	<0.005	<0.005
Fluorene	<0.005	<0.005	<0.005	<0.005
4-chlorophenyl phenyl ether	<0.005	<0.005	<0.005	<0.005
Diethyl phthalate	<0.005	<0.005	<0.005	<0.005
1,2-diphenylhydrazine	<0.005	<0.005	<0.005	<0.005
N-nitrosodiphenylamine	<0.005	<0.005	<0.005	<0.005
4-bromophenyl phenyl ether	<0.005	<0.005	<0.005	<0.005
Hexachlorobenzene	<0.005	<0.005	<0.005	<0.005
Phenanthrene	<0.005	<0.005	<0.005	<0.005
Anthracene	<0.005	<0.005	<0.005	<0.005
Di-n-butyl phthalate	<0.005	<0.005	<0.005	<0.005
Fluoranthene	<0.005	<0.005	<0.005	<0.005
Pyrene	<0.005	<0.005	<0.005	<0.005
Benzidine[3]	<0.020	<0.020	<0.020	<0.020
Butyl benzyl phthalate	<0.005	<0.005	<0.005	<0.005
Benzo (a) anthracene	<0.005	<0.005	<0.005	<0.005
Chrysene	<0.005	<0.005	<0.005	<0.005
3,3'-dichlorobenzidine[3]	<0.020	<0.020	<0.020	<0.020
Bis (2-ethylhexyl) phthalate	0.060	0.035	0.011	0.009
Di-n-octyl phthalate	<0.005	<0.005	<0.005	<0.005
Benzo (b) fluoranthene	<0.005	<0.005	<0.005	<0.005
Benzo (K) fluoranthene	<0.005	<0.005	<0.005	<0.005
Benzo (a) pyrene	<0.005	<0.005	<0.005	<0.005
Indeno (1,2,3-cd) pyrene	<0.005	<0.005	<0.005	<0.005
Dibenzo (a,h) anthracene	<0.005	<0.005	<0.005	<0.005
Benzo (ghi) perylene	<0.005	<0.005	<0.005	<0.005
TCDD-Dioxin	Not Detected	Not Detected	Not Detected	Not Detected

EPA Method: EPA 625
Method Detection Limit: 0.005 mg/L, [3]0.020 mg/L
Analyst/Date/Time: CLH-04/06/93 @ 14:54, 16:03, 17:00, 04/07/93 @ 10:54

Sample Identification:	Outfall 001	Outfall 001	Outfall 101	Outfall 102
JRA Sample ID:	**93-2474**	**93-2652**	**93-2583**	**93-2610**
ACID EXTRACTABLES (mg/L)				
2-Chlorophenol	<0.005	<0.005	<0.005	<0.005
Phenol	<0.005	<0.005	<0.005	<0.005
2-nitrophenol	<0.005	<0.005	<0.005	<0.005
2,4-Dimethylphenol	<0.005	<0.005	<0.005	<0.005
2,4-Dichlorophenol	<0.005	<0.005	<0.005	<0.005
4-chloro-3-methylphenol	<0.005	<0.005	<0.005	<0.005
2,4,6-trichlorophenol	<0.005	<0.005	<0.005	<0.005
2,4-dinitrophenol[3]	<0.020	<0.020	<0.020	<0.020
4-nitrophenol[3]	<0.020	<0.020	<0.020	<0.020
2-methyl-4,6-dinitrophenol[3]	<0.020	<0.020	<0.020	<0.020
Pentachlorophenol[3]	<0.020	<0.020	<0.020	<0.020
PESTICIDES (mg/L)				
Alpha-BHC	<0.005	<0.005	<0.005	<0.005
beta-BHC	<0.005	<0.005	<0.005	<0.005
gamma-BHC	<0.005	<0.005	<0.005	<0.005
Heptachlor	<0.005	<0.005	<0.005	<0.005
delta-BHC	<0.005	<0.005	<0.005	<0.005
Aldrin	<0.005	<0.005	<0.005	<0.005
Heptachlor Epoxide	<0.005	<0.005	<0.005	<0.005
alpha Endosulfan	<0.005	<0.005	<0.005	<0.005
p,p-DDE	<0.005	<0.005	<0.005	<0.005
Dieldrin	<0.005	<0.005	<0.005	<0.005
drin	<0.005	<0.005	<0.005	<0.005
,p-DDD	<0.005	<0.005	<0.005	<0.005
beta-Endosulfan	<0.005	<0.005	<0.005	<0.005
p,p-DDT	<0.005	<0.005	<0.005	<0.005
Endrin Aldehyde	<0.005	<0.005	<0.005	<0.005
Endosulfan Sulfate	<0.005	<0.005	<0.005	<0.005
Methoxychlor	<0.005	<0.005	<0.005	<0.005
Chlordane	<0.005	<0.005	<0.005	<0.005
Toxaphene	<0.005	<0.005	<0.005	<0.005
PCBs (mg/L)				
1016/1242	<0.010	<0.010	<0.010	<0.010
1221	<0.010	<0.010	<0.010	<0.010
1232	<0.010	<0.010	<0.010	<0.010
1248	<0.010	<0.010	<0.010	<0.010
1254	<0.010	<0.010	<0.010	<0.010
1260	<0.010	<0.010	<0.010	<0.010

EPA Method: EPA 625
Method Detection Limit: 0.005 mg/L, [3]0.020 mg/L; PCB's = 0.010 mg/L
Analyst/Date/Time: CLH-04/06/93 @ 14:54, 16:03, 17:00; 04/07/93 @ 10:54

Sample Received:	03/26/93 @ 18:40	04/02/93 @ 14:50	03/29/93 @ 14:00	03/31/93 @ 16:[illegible]
Grab Collected:	03/26/93 @ N/A	04/02/93 @ 09:14	03/29/93 @ N/A	03/30/93 @ N/A
Sample Identification:	Outfall 001	Outfall 001	Outfall 101	Outfall 102
JRA Sample ID:	**93-2531**	**93-2653**	**93-2542**	**93-2611**
	Field Blank	Field Blank	Field Blank	Field Blank

(Results in mg/L)

VOLATILES (mg/L)

Chloromethane[1]	<0.010	<0.010	<0.010	<0.010
Bromomethane[1]	<0.010	<0.010	<0.010	<0.010
Vinyl Chloride[1]	<0.010	<0.010	<0.010	<0.010
Chloroethane[1]	<0.010	<0.010	<0.010	<0.010
Methylene Chloride	<0.005	<0.005	<0.005	<0.005
Trichlorofluoromethane	<0.005	<0.005	<0.005	<0.005
1,1-Dichloroethene	<0.005	<0.005	<0.005	<0.005
1,1-Dichloroethane	<0.005	<0.005	<0.005	<0.005
trans-1,2-Dichloroethene	<0.005	<0.005	<0.005	<0.005
Chloroform	<0.005	<0.005	<0.005	<0.005
1,2-Dichloroethane	<0.005	<0.005	<0.005	<0.005
1,1,1-Trichloroethane	<0.005	<0.005	<0.005	<0.005
Carbon Tetrachloride	<0.005	<0.005	<0.005	<0.005
Bromodichloromethane	<0.005	<0.005	<0.005	<0.005
1,1,2,2-Tetrachloroethane	<0.005	<0.005	<0.005	<0.005
1,2-Dichloropropane	<0.005	<0.005	<0.005	<0.005
trans-1,3-Dichloropropene	<0.005	<0.005	<0.005	<0.005
Trichloroethene	<0.005	<0.005	<0.005	<0.005
Dibromochloromethane	<0.005	<0.005	<0.005	<0.005
1,1,2-Trichloroethane	<0.005	<0.005	<0.005	<0.005
Benzene	<0.005	<0.005	<0.005	<0.005
cis-1,3-Dichloropropene	<0.005	<0.005	<0.005	<0.005
2-Chloroethylvinyl Ether[1]	<0.010	<0.010	<0.010	<0.010
Bromoform	<0.005	<0.005	<0.005	<0.005
Tetrachloroethene	<0.005	<0.005	<0.005	<0.005
Toluene	<0.005	<0.005	<0.005	<0.005
Chlorobenzene	<0.005	<0.005	<0.005	<0.005
Ethylbenzene	<0.005	<0.005	<0.005	<0.005
Acrolein[2]	<0.100	<0.100	<0.100	<0.100
Acrylonitrile[2]	<0.100	<0.100	<0.100	<0.100

EPA Method: EPA 624
Method Detection Limit: 0.005 mg/L, [1]0.010 mg/L, [2]0.100 mg/L
Analyst/Date/Time: CP-03/31/93 @ 21:47, 22:29; 04/01/93 @ 21:20; 04/06/93 @ 18:42

Semivolatiles Library Search showed some major peaks as follows:

93-2474 (Outfall 001)
Cyclohexene

93-2652 (Outfall 001)
Hexane, 2,3,4-trimethyl-
Nonane
2-propanol, 1-(2-methoxypropoxy)-
2-propanol, 1-(2-methoxy-1-methylethoxy)-
Cyclohexene

93-2583 (Outfall 101)
Cychohexene

93-2610 (Outfall 102)
Cyclohexene

Analysis	EPA Method	Method Detection Limit (mg/L)	Analyst/Date/Time
BOD_5	405.1	1.0	SW-03/28/93 @ 13:45, 03/31/93 @ 11:10, 04/01/93 @ 11:15, 04/02/93 @ 16:15
Total Organic Carbon	415.1	1	MAF-03/31/93 @ 09:00, 04/13/93 @ 13:00
COD	410.4	20	CSA-04/01/93 @ 18:45, 04/19/93 @ 08:35
Nitrate/Nitrite	353.2	0.05	MEC-04/08/93 @ 16:02
Total Phosphorus	365.2	0.02	MAF-03/31/93 @ 15:00, 04/13/93 @ 14:30
Total Organic Nitrogen	350.1/351.2	0.5	MEC-04/01/93 @ 17:17, MAF-04/06/93 @ 16:00, MEC-04/07/93 @ 17:05
Ammonia	350.1	0.1	MEC-04/01/93 @ 17:17, 04/07/93 @ 17:05
Total Kjeldahl Nitrogen	351.2	0.5	MAF-03/30/93 @ 15:21, 04/06/93 @ 17:00
Bromide	SM16th 405	0.1	CF-04/13/93 @ 13:45
Sulfate	375.4	5	FPE-03/30/93 @ 12:30, 04/06/93 @ 10:30
Cyanide	335.3	0.005	MAF-04/02/93 @ 16:48
Total Phenolic Compounds	420.2	0.01	MEC-03/29/93 @ 14:39, CDN-04/05/93 @ 15:18
Sulfide	376.1	0.2	CSA-03/30/93 @ 17:35, CSA-04/05/93 @ 10:10
Sulfite	377.1	2	CSA-03/29/93 @ 14:25, 03/30/93 @ 17:15
Surfactants	425.1	0.025	MAF-03/28/93 @ 09:00, CSA-04/01/93 @ 10:30, CSA-04/01/93 @ 10:30, MAF-04/03/93 @ 20:30
METALS			
Antimony	204.2	0.005	FPE-04/07/93 @ 09:30
Arsenic	206.2	0.001	FPE-04/01/93 @ 14:38, 04/07/93 @ 09:30, 04/12/93 @ 18:19
Beryllium	210.2	0.0005	SKH-04/12/93 @ 14:36, 14:42, 14:47
Cadmium	213.2	0.0002	FPE-04/02/93 @ 14:58, 15:03, 15:07
Copper	220.2	0.001	FPE-04/01/93 @ 09:45
Lead	239.2	0.001	FPE/SKH-04/05/93 @ 15:40, 15:45, 15:50
Mercury	245.1	0.0002	SKH-04/01/93 @ 07:00, 04/15/93 @ 07:30
Nickel	249.2	0.001	FPE-04/07/93 @ 11:46, 11:51, 12:00
Selenium	270.2	0.002	FPE-04/01/93 @ 17:51, 18:04, 18:05
Silver	272.2	0.0002	FPE-04/05/93 @ 09:45
Thallium	279.2	0.005	FPE-04/07/93 @ 15:37, 15:41, 15:45
Aluminum	202.1	0.1	SKH-04/12/93 @ 07:45
Barium	208.1	0.1	SKH-04/12/93 @ 12:15
Magnesium	242.1	0.5	SKH-04/06/93 @ 10:00
Molybdenum	6010	0.1	LAN(RSJ)-04/09/93 @ 17:13, 04/10/93 @ 17:31, 13:22
Manganese	243.1	0.01	SKH-04/13/93 @ 08:30
Chromium	218.2	0.001	FPE-04/05/93 @ 13:40
Zinc	289.1	0.01	SKH-04/06/93 @ 09:30
Iron	236.1	0.1	SKH-04/26/93 @ 09:30

Attachment H:

Applicable Federal Effluent Guidelines

section, which may be discharged by a point source subject to the provisions of this subpart after application of the standards of performance for new sources:

[Metric units (kg/kkg of product); English units (lb/1,000 lb of product)]

Effluent characteristic	Effluent limitations	
	Maximum for any 1 day	Average of daily values for 30 consecutive days shall not exceed—
TSS	0.35	0.18
Total phosphorus (as P)	.56	.28
Fluoride (as F)	.21	.11
pH	(1)	(1)

1 Within the range 6.0 to 9.5.

§ 422.66 [Reserved]

§ 422.67 Effluent limitations guidelines representing the degree of effluent reduction attainable by the application of the best conventional pollutant control technology.

Except as provided in §§ 125.30 through 125.32, the following limitations establish the quantity or quality of pollutants or pollutant properties, controlled by this section, which may be discharged by a point source subject to the provisions of this subpart after application of the best conventional pollutant control technology:

[Metric units (kg/kkg of product); English units (lb/1,000 lb of product)]

Effluent characteristic	Effluent limitations	
	Maximum for any 1 day	Average of daily values for 30 consecutive days shall not exceed—
TSS	0.35	0.18
pH	(1)	(1)

1 Within the range 6.0 to 9.5.

[51 FR 25000, July 9, 1986]

PART 423—STEAM ELECTRIC POWER GENERATING POINT SOURCE CATEGORY

Sec.

423.10 Applicability.
423.11 Specialized definitions.
423.12 Effluent limitations guidelines representing the degree of effluent reduction attainable by the application of the best practicable control technology currently available (BPT).
423.13 Effluent limitations guidelines representing the degree of effluent reduction attainable by the application of the best available technology economically achievable (BAT).
423.14 Effluent limitations guidelines representing the degree of effluent reduction attainable by the application of the best conventional pollutant control technology (BCT). [Reserved]
423.15 New source performance standards (NSPS).
423.16 Pretreatment standards for existing sources (PSES).
423.17 Pretreatment standards for new sources (PSNS).
APPENDIX A TO PART 423—126 PRIORITY POLLUTANTS

AUTHORITY: Secs. 301; 304(b), (c), (e), and (g); 306(b) and (c); 307(b) and (c); and 501, Clean Water Act (Federal Water Pollution Control Act Amendments of 1972, as amended by Clean Water Act of 1977) (the ''Act''; 33 U.S.C. 1311; 1314(b), (c), (e), and (g); 1316(b) and (c); 1317(b) and (c); and 1361; 86 Stat. 816, Pub. L. 92–500; 91 Stat. 1567, Pub. L. 95–217), unless otherwise noted.

SOURCE: 47 FR 52304, Nov. 19, 1982, unless otherwise noted.

§ 423.10 Applicability.

The provisions of this part are applicable to discharges resulting from the operation of a generating unit by an establishment primarily engaged in the generation of electricity for distribution and sale which results primarily from a process utilizing fossil-type fuel (coal, oil, or gas) or nuclear fuel in conjunction with a thermal cycle employing the steam water system as the thermodynamic medium.

§ 423.11 Specialized definitions.

In addition to the definitions set forth in 40 CFR part 401, the following definitions apply to this part:

(a) The term *total residual chlorine* (or total residual oxidants for intake water with bromides) means the value obtained using the amperometric method for total residual chlorine described in 40 CFR part 136.

(b) The term *low volume waste sources* means, taken collectively as if from one source, wastewater from all sources except those for which specific limitations are otherwise established in this part. Low volume wastes sources include, but are not limited to:

wastewaters from wet scrubber air pollution control systems, ion exchange water treatment system, water treatment evaporator blowdown, laboratory and sampling streams, boiler blowdown, floor drains, cooling tower basin cleaning wastes, and recirculating house service water systems. Sanitary and air conditioning wastes are not included.

(c) The term *chemical metal cleaning waste* means any wastewater resulting from the cleaning of any metal process equipment with chemical compounds, including, but not limited to, boiler tube cleaning.

(d) The term *metal cleaning waste* means any wastewater resulting from cleaning [with or without chemical cleaning compounds] any metal process equipment including, but not limited to, boiler tube cleaning, boiler fireside cleaning, and air preheater cleaning.

(e) The term *fly ash* means the ash that is carried out of the furnace by the gas stream and collected by mechanical precipitators, electrostatic precipitators, and/or fabric filters. Economizer ash is included when it is collected with fly ash.

(f) The term *bottom ash* means the ash that drops out of the furnace gas stream in the furnace and in the economizer sections. Economizer ash is included when it is collected with bottom ash.

(g) The term *once through cooling water* means water passed through the main cooling condensers in one or two passes for the purpose of removing waste heat.

(h) The term *recirculated cooling water* means water which is passed through the main condensers for the purpose of removing waste heat, passed through a cooling device for the purpose of removing such heat from the water and then passed again, except for blowdown, through the main condenser.

(i) The term *10 year, 24/hour rainfall event* means a rainfall event with a probable recurrence interval of once in ten years as defined by the National Weather Service in Technical Paper No. 40. *Rainfall Frequency Atlas of the United States*, May 1961 or equivalent regional rainfall probability information developed therefrom.

(j) The term *blowdown* means the minimum discharge of recirculating water for the purpose of discharging materials contained in the water, the further buildup of which would cause concentration in amounts exceeding limits established by best engineering practices.

(k) The term *average concentration* as it relates to chlorine discharge means the average of analyses made over a single period of chlorine release which does not exceed two hours.

(l) The term *free available chlorine* shall mean the value obtained using the amperometric titration method for free available chlorine described in *Standard Methods for the Examination of Water and Wastewater*, page 112 (13th edition).

(m) The term *coal pile runoff* means the rainfall runoff from or through any coal storage pile.

§ 423.12 Effluent limitations guidelines representing the degree of effluent reduction attainable by the application of the best practicable control technology currently available (BPT).

(a) In establishing the limitations set forth in this section, EPA took into account all information it was able to collect, develop and solicit with respect to factors (such as age and size of plant, utilization of facilities, raw materials, manufacturing processes, nonwater quality environmental impacts, control and treatment technology available, energy requirements and costs) which can affect the industry subcategorization and effluent levels established. It is, however, possible that data which would affect these limitations have not been available and, as a result, these limitations should be adjusted for certain plants in this industry. An individual discharger or other interested person may submit evidence to the Regional Administrator (or to the State, if the State has the authority to issue NPDES permits) that factors relating to the equipment or facilities involved, the process applied, or other such factors related to such discharger are fundamentally different from the factors considered in the establishment of the guidelines. On the basis of such evidence or other available information, the Regional

Administrator (or the State) will make a written finding that such factors are or are not fundamentally different for that facility compared to those specified in the Development Document. If such fundamentally different factors are found to exist, the Regional Administrator or the State shall establish for the discharger effluent limitations in the NPDES Permit either more or less stringent than the limitations established herein, to the extent dictated by such fundamentally different factors. Such limitations must be approved by the Administrator of the Environmental Protection Agency. The Administrator may approve or disapprove such limitations, specify other limitations, or initiate proceedings to revise these regulations. The phrase ''other such factors'' appearing above may include significant cost differentials. In no event may a discharger's impact on receiving water quality be considered as a factor under this paragraph.

(b) Any existing point source subject to this subpart must achieve the following effluent limitations representing the degree of effluent reduction by the application of the best practicable control technology currently available (BPT):

(1) The pH of all discharges, except once through cooling water, shall be within the range of 6.0–9.0.

(2) There shall be no discharge of polychlorinated biphenyl compounds such as those commonly used for transformer fluid.

(3) The quantity of pollutants discharged from low volume waste sources shall not exceed the quantity determined by multiplying the flow of low volume waste sources times the concentration lised in the following table:

Pollutant or pollutant property	BPT effluent limitations	
	Maximum for any 1 day (mg/l)	Average of daily values for 30 consecutive days shall not exceed (mg/l)
TSS	100.0	30.0
Oil and grease	20.0	15.0

(4) The quantity of pollutants discharged in fly ash and bottom ash transport water shall not exceed the quantity determined by multiplying the flow of fly ash and bottom ash transport water times the concentration listed in the following table:

Pollutant or pollutant property	BPT effluent limitations	
	Maximum for any 1 day (mg/l)	Average of daily values for 30 consecutive days shall not exceed (mg/l)
TSS	100.0	30.0
Oil and grease	20.0	15.0

(5) The quantity of pollutants discharged in metal cleaning wastes shall not exceed the quantity determined by multiplying the flow of metal cleaning wastes times the concentration listed in the following table:

Pollutant or pollutant property	BPT effluent limitations	
	Maximum for any 1 day (mg/l)	Average of daily values for 30 consecutive days shall not exceed (mg/l)
TSS	100.0	30.0
Oil and grease	20.0	15.0
Copper, total	1.0	1.0
Iron, total	1.0	1.0

(6) The quantity of pollutants discharged in once through cooling water shall not exceed the quantity determined by multiplying the flow of once through cooling water sources times the concentation listed in the following table:

Pollutant or pollutant property	BPT effluent limitations	
	Maximum concentration (mg/l)	Average concentration (mg/l)
Free available chlorine	0.5	0.2

(7) The quantity of pollutants discharged in cooling tower blowdown shall not exceed the quantity determined by multiplying the flow of cooling tower blowdown sources times the concentration listed in the following table:

Pollutant or pollutant property	BPT effluent limitations	
	Maximum concentration (mg/l)	Average concentration (mg/l)
Free available chlorine	0.5	0.2

(8) Neither free available chlorine nor total residual chlorine may be discharged from any unit for more than two hours in any one day and not more than one unit in any plant may discharge free available or total residual chlorine at any one time unless the utility can demonstrate to the Regional Administrator or State, if the State has NPDES permit issuing authority, that the units in a particular location cannot operate at or below this level or chlorination.

(9) Subject to the provisions of paragraph (b)(10) of this section, the following effluent limitations shall apply to the point source discharges of coal pile runoff:

Pollutant or pollutant property	BPT effluent limitations
	Maximum concentration for any time (mg/l)
TSS	50

(10) Any untreated overflow from facilities designed, constructed, and operated to treat the volume of coal pile runoff which is associated with a 10 year, 24 hour rainfall event shall not be subject to the limitations in paragraph (b)(9) of this section.

(11) At the permitting authority's discretion, the quantity of pollutant allowed to be discharged may be expressed as a concentration limitation instead of the mass based limitations specified in paragraphs (b)(3) through (7) of this section. Concentration limitations shall be those concentrations specified in this section.

(12) In the event that waste streams from various sources are combined for treatment or discharge, the quantity of each pollutant or pollutant property controlled in paragraphs (b)(1) through (11) of this section attributable to each controlled waste source shall not exceed the specified limitations for that waste source.

(The information collection requirements contained in paragraph (a) were approved by the Office of Management and Budget under control number 2000–0194)

[47 FR 52304, Nov. 19, 1982, as amended at 48 FR 31404, July 8, 1983]

§ 423.13 Effluent limitations guidelines representing the degree of effluent reduction attainable by the application of the best available technology economically achievable (BAT).

Except as provided in 40 CFR 125.30 through 125.32, any existing point source subject to this part must achieve the following effluent limitations representing the degree of effluent reduction attainable by the application of the best available technology economically achievable (BAT).

(a) There shall be no discharge of polychlorinated biphenyl compounds such as those commonly used for transformer fluid.

(b)(1) For any plant with a total rated electric generating capacity of 25 or more megawatts, the quantity of pollutants discharged in once through cooling water from each discharge point shall not exceed the quantity determined by multiplying the flow of once through cooling water from each discharge point times the concentration listed in the following table:

Pollutant or pollutant property	BAT Effluent Limitations
	Maximum concentration (mg/l)
Total residual chlorine	0.20

(2) Total residual chlorine may not be discharged from any single generating unit for more than two hours per day unless the discharger demonstrates to the permitting authority that discharge for more than two hours is required for macroinvertebrate control. Simultaneous multi-unit chlorination is permitted.

(c)(1) For any plant with a total rated generating capacity of less than 25 megawatts, the quantity of pollutants discharged in once through cooling water shall not exceed the quantity determined by multiplying the flow of once through cooling water sources times the concentration listed in the following table:

Pollutant or pollutant property	BAT effluent limitations	
	Maximum concentration (mg/l)	Average concentration (mg/l)
Free available chlorine	0.5	0.2

(2) Neither free available chlorine nor total residual chlorine may be discharged from any unit for more than two hours in any one day and not more than one unit in any plant may discharge free available or total residual chlorine at any one time unless the utility can demonstrate to the Regional Administrator or State, if the State has NPDES permit issuing authority, that the units in a particular location cannot operate at or below this level of chlorination.

(d)(1) The quantity of pollutants discharged in cooling tower blowdown shall not exceed the quantity determined by multiplying the flow of cooling tower blowdown times the concentration listed below:

Pollutant or pollutant property	BAT effluent limitations	
	Maximum concentration (mg/l)	Average concentration (mg/l)
Free available chlorine	0.5	0.2

Pollutant or pollutant property	Maximum for any 1 day – (mg/l)	Average of daily values for 30 consecutive days shall not exceed =(mg/l)
The 126 priority pollutants (Appendix A) contained in chemicals added for cooling tower maintenance, except:	[1]	[1]
Chromium, total	0.2	0.2
Zinc, total	1.0	1.0

[1] No detectable amount.

(2) Neither free available chlorine nor total residual chlorine may be discharged from any unit for more than two hours in any one day and not more than one unit in any plant may discharge free available or total residual chlorine at any one time unless the utility can demonstrate to the Regional Administrator or State, if the State has NPDES permit issuing authority, that the units in a particular location cannot operate at or below this level of chlorination.

(3) At the permitting authority's discretion, instead of the monitoring specified in 40 CFR 122.11(b) compliance with the limitations for the 126 priority pollutants in paragraph (d)(1) of this section may be determined by engineering calculations which demonstrate that the regulated pollutants are not detectable in the final discharge by the analytical methods in 40 CFR part 136.

(e) The quantity of pollutants discharged in chemical metal cleaning wastes shall not exceed the quantity determined by multiplying the flow of chemical metal cleaning wastes times the concentration listed in the following table:

Pollutant or pollutant property	BAT effluent limitations	
	Maximum for any 1 day (mg/l)	Average of daily values for 30 consecutive days shall not exceed – (mg/l)
Copper, total	1.0	1.0
Iron, total	1.0	1.0

(f) [Reserved—Nonchemical Metal Cleaning Wastes].

(g) At the permitting authority's discretion, the quantity of pollutant allowed to be discharged may be expressed as a concentration limitation instead of the mass based limitations specified in paragraphs (b) through (e) of this section. Concentration limitations shall be those concentrations specified in this section.

(h) In the event that waste streams from various sources are combined for treatment or discharge, the quantity of each pollutant or pollutant property controlled in paragraphs (a) through (g) of this section attributable to each controlled waste source shall not exceed the specified limitation for that waste source.

(The information collection requirements contained in paragraphs (c)(2) and (d)(2) were approved by the Office of Management and Budget under control number 2040–0040. The information collection requirements contained in paragraph (d)(3) were approved under control number 2040–0033.)

[47 FR 52304, Nov. 19, 1982, as amended at 48 FR 31404, July 8, 1983]

§ 423.14 Effluent limitations guidelines representing the degree of effluent reduction attainable by the application of the best conventional pollutant control technology (BCT). [Reserved]

§ 423.15 New source performance standards (NSPS).

Any new source subject to this subpart must achieve the following new source performance standards:

(a) The pH of all discharges, except once through cooling water, shall be within the range of 6.0–9.0.

(b) There shall be no discharge of polychlorinated biphenyl compounds such as those commonly used for transformer fluid.

(c) The quantity of pollutants discharged from low volume waste sources shall not exceed the quantity determined by multiplying the flow of low volume waste sources times the concentration listed in the following table:

Pollutant or pollutant property	NSPS effluent limitations	
	Maximum for any 1 day (mg/l)	Average of daily values for 30 consecutive days shall not exceed (mg/l)
TSS	100.0	30.0
Oil and grease	20.0	15.0

(d) The quantity of pollutants discharged in chemical metal cleaning wastes shall not exceed the quantity determined by multiplying the flow of chemical metal cleaning wastes times the concentration listed in the following table:

Pollutant or pollutant property	NSPS effluent limitations	
	Maximum for any 1 day (mg/l)	Average of daily values for 30 consecutive days shall not exceed (mg/l)
TSS	100.0	30.0
Oil and grease	20.0	15.0
Copper, total	1.0	1.0
Iron, total	1.0	1.0

(e) [Reserved—Nonchemical Metal Cleaning Wastes].

(f) The quantity of pollutants discharged in bottom ash transport water shall not exceed the quantity determined by multiplying the flow of the bottom ash transport water times the concentration listed in the following table:

Pollutant or pollutant property	NSPS effluent limitations	
	Maximum for any 1 day (mg/l)	Average of daily values for 30 consecutive days shall not exceed (mg/l)
TSS	100.0	30.0
Oil and grease	20.0	15.0

(g) There shall be no discharge of wastewater pollutants from fly ash transport water.

(h)(1) For any plant with a total rated electric generating capacity of 25 or more megawatts, the quantity of pollutants discharged in once through cooling water from each discharge point shall not exceed the quantity determined by multiplying the flow of once through cooling water from each discharge point times the concentration listed in the following table:

Pollutant or pollutant property	NSPS effluent limitations
	Maximum concentration (mg/l)
Total residual chlorine	0.20

(2) Total residual chlorine may not be discharged from any single generating unit for more than two hours per day unless the discharger demonstrates to the permitting authority that discharge for more than two hours is required for macroinvertebrate control. Simultaneous multi-unit chlorination is permitted.

(i)(1) For any plant with a total rated generating capacity of less than 25 megawatts, the quantity of pollutants discharged in once through cooling water shall not exceed the quantity determined by multiplying the flow of once through cooling water sources times the concentration listed in the following table:

Pollutant of pollutant property	NSPS effluent limitations	
	Maximum concentration (mg/l)	Average concentration (mg/l)
Free available chlorine	0.5	0.2

(2) Neither free available chlorine nor total residual chlorine may be discharged from any unit for more than two hours in any one day and not more than one unit in any plant may discharge free available or total residual chlorine at any one time unless the utility can demonstrate to the Regional Administrator or State, if the State has NPDES permit issuing authority, that the units in a particular location cannot operate at or below this level of chlorination.

(j)(1) The quantity of pollutants discharged in cooling tower blowdown shall not exceed the quantity determined by multiplying the flow of cooling tower blowdown times the concentration listed below:

Pollutant or pollutant property	NSPS effluent limitations	
	Maximum concentration (mg/l)	Average concentration (mg/l)
Free available chlorine	0.5	0.2

Pollutant or pollutant property	Maximum for any 1 day (mg/l)	Average of daily values for 30 consecutive days shall not exceed – (mg/l)
The 126 priority pollutants (Appendix A) contained in chemicals added for cooling tower maintenance, except:		
Chromium, total	(1)	(1)
Zinc, total	0.2	0.2
	1.0	1.0

[1] No detectable amount.

(2) Neither free available chlorine nor total residual chlorine may be discharged from any unit for more than two hours in any one day and not more than one unit in any plant may discharge free available or total residual chlorine at any one time unless the utility can demonstrate to the Regional Administrator or State, if the State has NPDES permit issuing authority, that the units in a particular location cannot operate at or below this level of chlorination.

(3) At the permitting authority's discretion, instead of the monitoring in 40 CFR 122.11(b), compliance with the limitations for the 126 priority pollutants in paragraph (j)(1) of this section may be determined by engineering calculations which demonstrate that the regulated pollutants are not detectable in the final discharge by the analytical methods in 40 CFR part 136.

(k) Subject to the provisions of § 423.15(l), the quantity or quality of pollutants or pollutant parameters discharged in coal pile runoff shall not exceed the limitations specified below:

Pollutant or pollutant property	NSPS effluent limitations for any time
TSS	Not to exceed 50 mg/l.

(l) Any untreated overflow from facilities designed, constructed, and operated to treat the coal pile runoff which results from a 10 year, 24 hour rainfall event shall not be subject to the limitations in § 423.15(k).

(m) At the permitting authority's discretion, the quantity of pollutant allowed to be discharged may be expressed as a concentration limitation instead of the mass based limitation specified in paragraphs (c) through (j) of this section. Concentration limits shall be based on the concentrations specified in this section.

(n) In the event that waste streams from various sources are combined for treatment or discharge, the quantity of each pollutant or pollutant property controlled in paragraphs (a) through (m) of this section attributable to each controlled waste source shall not exceed the specified limitation for that waste source.

(The information collection requirements contained in paragraphs (h)(2), (i)(2), and (j)(2) were approved by the Office of Management and Budget under control number 2040–0040. The information collection requirements contained in paragraph (j)(3) were approved under control number 2040–0033.)

[47 FR 52304, Nov. 19, 1982, as amended at 48 FR 31404, July 8, 1983]

§ 423.16 Pretreatment standards for existing sources (PSES).

Except as provided in 40 CFR 403.7 and 403.13, any existing source subject to this subpart which introduces pollutants into a publicly owned treatment works must comply with 40 CFR part 403 and achieve the following pretreatment standards for existing sources (PSES) by July 1, 1984:

(a) There shall be no discharge of polychlorinated biphenol compounds such as those used for transformer fluid.

Attachment I:

NPDES Permit Rating Worksheet

NPDES PERMIT RATING WORK SHEET

☐ Regular Addition
☐ DiscretionaryAddition
► Score change, but no status change
☐ Deletion

NPDES NO. VA0079502

Facility Name: Hopewell Cogeneration LTD. Partnership

City: Hopewell

Receiving Water: Gravelly Run

Reach Number: _____

Is this facility a steam electric power plant (SIC=4911) with one or more of the following characteristics?
1. Power output 500 MW or greater (not using a cooling pond/lake)
2. A nuclear power plant
3. Cooling water discharge greater than 25% of the receiving stream's 7Q10 flow rate

☐ YES; score is 600 (stop here) ☐ NO (continue)

Is this permit for a municipal separate storm sewer serving a population greater than 100,000?

☐ YES; score is 700 (stop here)
☐ NO (continue)

FACTOR 1: Toxic Pollutant Potential

PCS SIC Code: _____ Primary SIC Code: 4911 Other SIC Codes: 4931, 4961
Industrial Subcategory Code: _____ (Code 000 if no subcategory)

Determine the Toxicity potential from Appendix A. Be sure to use the TOTAL toxicity potential column and check one)

Toxicity Group	Code	Points	Toxicity Group	Code	Points	Toxicity Group	Code	Points
☐ No process waste streams	0	0	☐ 3.	3	15	☐ 7.	7	35
☐ 1.	1	5	☐ 4.	4	20	☐ 8.	8	40
☐ 2.	2	10	☐ 5.	5	25	☐ 9.	9	45
			► 6.	6	30	☐ 10.	10	50

Code Number Checked: 6

Total Points Factor 1: 30

FACTOR 2: Flow/Stream Flow Volume (*Complete either Section A or Section B; check only one)*

Section A ☐ Wastewater Flow Only Considered

Wastewater Type (See Instructions)		Code	Points
Type I: Flow < 5 MGD	☐	11	0
Flow 5 to 10 MGD	☐	12	10
Flow > 10 to 50 MGD	☐	13	20
Flow > 50 MGD	☐	14	30
Type II: Flow < 1 MGD	☐	21	10
Flow 1 to 5 MGD	☐	22	20
Flow > 5 to 10 MGD	☐	23	30
Flow > 10 MGD	☐	24	50
Type III: Flow < 1 MGD	☐	31	0
Flow 1 to 5 MGD	☐	32	10
Flow > 5 to 10 MGD	☐	33	20
Flow > 10 MGD	☐	34	30

Section B ► Wastewater and Stream Flow Considered

Wastewater Type (See Instructions)	Percent of instream Wastewater Concentration at Receiving Stream Low Flow		Code	Points
Type I/III:	< 10 %	►	41	0
	10 % to < 50 %	☐	42	10
	> 50 %	☐	43	20
Type II:	< 10 %	☐	51	0
	10 % to <50 %	☐	52	20
	> 50 %	☐	53	30

Code Checked from Section A or B: 41

Total Points Factor 2: 0

FACTOR 3: Conventional Pollutants NPDES NO: VA0079502

(only when limited by the permit)

A. Oxygen Demanding Pollutant: (check one) ☐ BOD ☐ COD ☐ Other: _____

			Code	Points
Permit Limits: (check one)	☐	< 100 lbs/day	1	0
	☐	100 to 1000 lbs/day	2	5
	☐	> 1000 to 3000 lbs/day	3	15
	☐	> 3000 lbs/day	4	20

Code Checked: _____

Points Scored: ___0__

B. Total Suspended Solids (TSS)

			Code	Points
Permit Limits: (check one)	►	< 100 lbs/day	1	0
	☐	100 to 1000 lbs/day	2	5
	☐	> 1000 to 5000 lbs/day	3	15
	☐	> 5000 lbs/day	4	20

Code Checked: ___1___

Points Scored: ___0___

C. Nitrogen Pollutant: (check one) ☐ Ammonia ☐ Other: _____

		Nitrogen Equivalent	*Code*	*Points*
Permit Limits: (check one)	☐	< 300 lbs/day	1	0
	☐	300 to 1000 lbs/day	2	5
	☐	> 1000 to 3000 lbs/day	3	15
	☐	> 3000 lbs/day	4	20

Code Checked: ____

Points Scored: ___0__

Total Points Factor 3: ___0__

FACTOR 4: Public Health Impact

Is there a public drinking water supply located within 50 miles downstream of the effluent discharge (this includes any body of water to which the receiving water is a tributary)? A public drinking water supply may include infiltration galleries, or other methods of conveyance that ultimately get water from the above referenced supply.

► YES (If yes, check toxicity potential number below)

☐ NO (If no, go to Factor 5)

Determine the *human health* toxicity potential from Appendix A. Use the same SIC code and subcategory reference as in Factor 1. (Be sure to use the human health toxicity group column ☐ check one below)

Toxicity Group	Code	Points	Toxicity Group	Code	Points	Toxicity Group	Code	Points
☐ No process waste streams	0	0	☐ 3.	3	0	☐ 7.	7	15
☐ 1.	1	0	☐ 4.	4	0	☐ 8.	8	20
☐ 2.	2	0	☐ 5.	5	5	☐ 9.	9	25
			► 6.	6	10	☐ 10.	10	30

Code Number Checked: __6___

Total Points Factor 4: ___10__

FACTOR 5: Water Quality Factors NPDES NO: VA0079502

A. *Is (or will) one or more of the effluent discharge limits based on water quality factors of the receiving stream (rather than technology-based federal effluent guidelines, or technology-based state effluent guidelines), or has a wasteload allocation been assigned to the discharge:*

		Code	Points
☐	Yes	1	10
►	No	2	0

B. *Is the receiving water in compliance with applicable water quality standards for pollutants that are water quality limited in the permit?*

		Code	Points
►	Yes	1	0
☐	No	2	5

C. *Does the effluent discharged from this facility exhibit the reasonable potential to violate water quality standards due to whole effluent toxicity?*

		Code	Points
☐	Yes	1	10
►	No	2	0

Code Number Checked: A 1 B 1 C 1

Points Factor 5: A 0 + B 0 + C 0 = 0 TOTAL

FACTOR 6: Proximity to Near Coastal Waters

A. *Base Score: Enter flow code here (from Factor 2):* 41 *Enter the multiplication factor that corresponds to the flow code:* 0.00

Check appropriate facility HPRI Code (from PCS):

	HPRI#	*Code*	*HPRI Score*	*Flow Code*	*Multiplication Factor*
☐	1	1	20	11, 31, or 41	0.00
☐	2	2	0	12, 32, or 42	0.05
►	3	3	30	13, 33, or 43	0.10
☐	4	4	0	14 or 34	0.15
☐	5	5	20	21 or 51	0.10
				22 or 52	0.30
				23 or 53	0.60
				24	1.00

HPRI code checked: 3

Base Score: (HPRI Score) 30 X (Multiplication Factor) 0.00 = 0 (TOTAL POINTS)

B. *Additional Points ☐ NEP Program*
For a facility that has an HPRI code of 3, does the facility discharge to one of the estuaries enrolled in the National Estuary Protection (NEP) program (see instructions) or the Chesapeake Bay?

	Code	Points
► Yes	1	10
☐ No	2	0

C. *Additional Points ☐ Great Lakes Area of Concern*
For a facility that has an HPRI code of 5, does the facility discharge any of the pollutants of concern into one of the Great Lakes' 31 areas of concern (see Instructions)

	Code	Points
☐ Yes	1	10
► No	2	0

Code Number Checked: A 3 B 1 C N/A

Points Factor 6: A 0 + B 10 + C 0 = 10 TOTAL

SCORE SUMMARY NPDES NO: VA0079502

Factor	Description	Total Points
1	Toxic Pollutant Potential	30
2	Flows/Streamflow Volume	0
3	Conventional Pollutants	0
4	Public Health Impacts	10
5	Water Quality Factors	0
6	Proximity to Near Coastal Waters	10
	TOTAL (Factors 1 through 6)	50

S1. Is the total score equal to or greater than 80? ☐ Yes (Facility is a major) ► No

S2. If the answer to the above questions is no, would you like this facility to be discretionary major?

► No

☐ Yes (Add 500 points to the above score and provide reason below:

Reason:

NEW SCORE: 50

OLD SCORE: 40

Jeremy Kazio
Permit Reviewer's Name

(804) 527-5044
Phone Number

September 23, 2009
Date