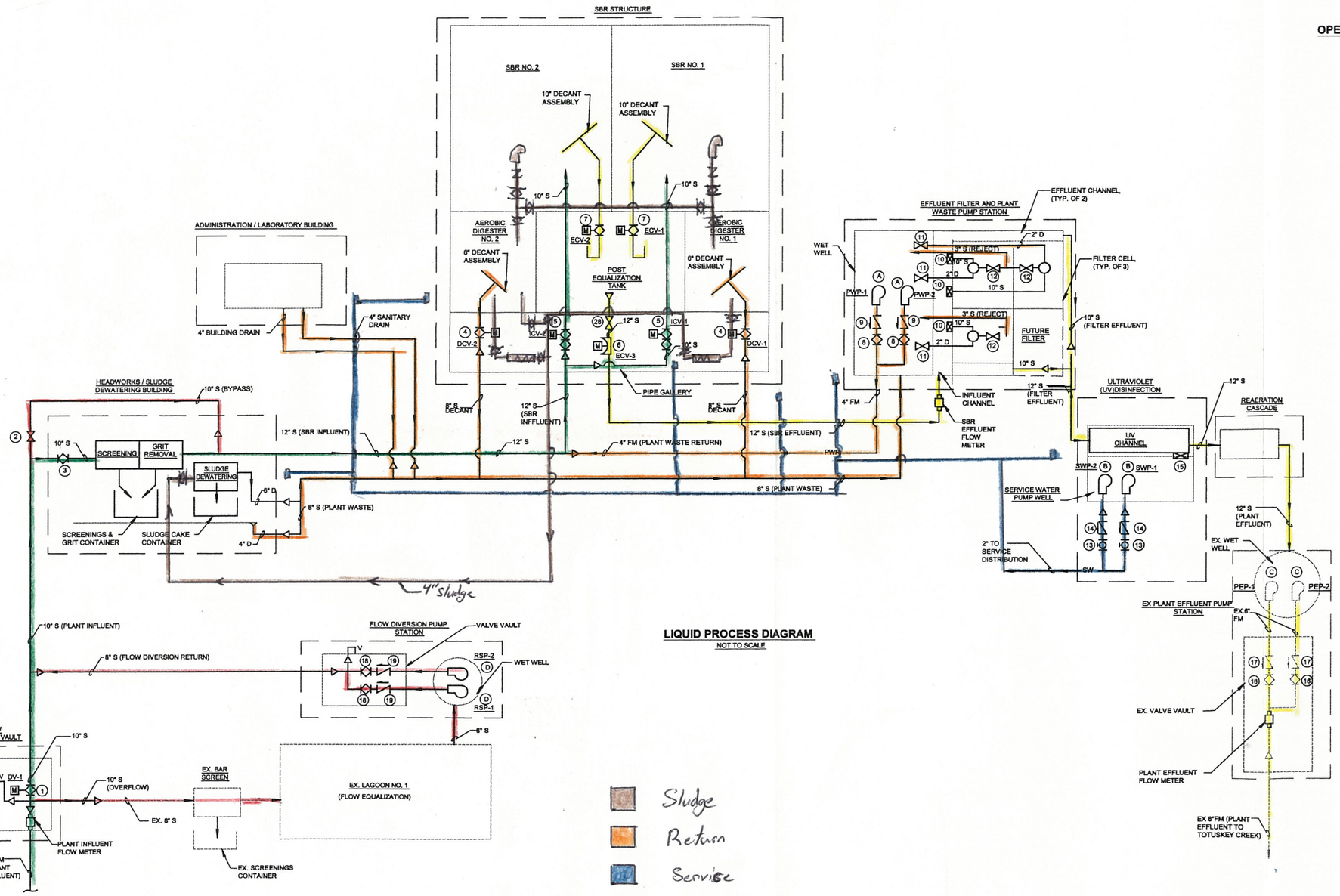

LIQUID PROCESS DIAGRAM

NOT TO SCALE

Sludge
Return
Service
Effluent
Influent
Bypass

NOTES:

1. SEE SHEET G-6 FOR VALVE AND GATE VALVE SCHEDULE AND FOR PROCESS PUMP SCHEDULE.

OPERATIONS SCHEDULE (0.30 MGD AVERAGE DAILY FLOW):

INFLUENT

OPERATIONS	24 HOURS/DAY, 7 DAYS/WEEK 52 WEEKS/YEAR
PLANT DESIGN FLOW	0.30 MGD AVERAGE DAILY FLOW (ADF)
PLANT PEAK FLOW	0.703 MGD
INSTANTANEOUS PEAK FLOW	1.17 MGD

HEADWORKS

FINE SCREEN	QUANTITY-1
CONTROLS	INTERMITTENT AUTOMATED OPERATION TO MAINTAIN MAXIMUM LOSS THROUGH SCREEN
GRIT REMOVAL SYSTEM	QUANTITY-1, CONTINUOUS, MANUAL OPERATION
DESIGN FLOW	0.30 MGD
INSTANTANEOUS PEAK FLOW	1.17 MGD
STANDBY SERVICE	EXISTING MANUAL SCREEN AND LAGOON NO. 1 FLOW EQUALIZATION

SBR PROCESS

DESIGN FLOW	0.351 MGD (INCLUDES WASTE RETURN)
PEAK FLOW	0.703 MGD
SBR SYSTEM	2 FULLY AUTOMATED AND SEQUENCED TANKS
SBR DESIGN CYCLE	6 HOURS/CYCLE, 4 CYCLESPER DAY PER TANK
2-TANK SYSTEM	8 CYCLES TOTAL
NORMAL MODE	0.351 MGD
ANOXIC FILL (MIXING)	90-MINUTES
AERATED FILL	90-MINUTES
REACT PERIOD	54-MINUTES
SETTLE	45-MINUTES
DECANT	35-MINUTES
IDLE TIME (MIXING)	46-MINUTES
TOTAL CYCLE TIME	360-MINUTES (6 HOURS PER TANK)
SBR PEAK CYCLE	3-HOURS/CYCLE, 8 CYCLES PER TANK
2 TANK SYSTEM	16-CYCLES TOTAL
STORM MODE	0.703 MGD
ANOXIC FILL (MIXING)	16-MINUTES
AERATED FILL	74-MINUTES
REACT PERIOD	10-MINUTES
SETTLE	45-MINUTES
DECANT	35-MINUTES
TOTAL CYCLE TIME	180 MINUTES (3 HOURS PER TANK)
DECANT RATE	1200 TO 1300GPM DESIGN AT 1255GPM
AERATION EQUIPMENT	3-BLOWERS; TWO (2) DUTY, ONE (1) STANDBY
EMERGENCY BYPASS	EXISTING LAGOON, NO. 1 FLOW EQUALIZATION

NOTE: SUSTAINED PEAKS GREATER THAN 0.703 MGD SHALL BE AUTOMATICALLY DIVERTED TO OVERFLOW LAGOON NO. 1

POST EQUALIZATION

EQUIPMENT	ONE (1) SUBMERSIBLE MIXER
TANK USABLE VOLUME	74,000 GALLONS
STANDARD SBR DECANT VOLUME	43,925 GALLONS
SURGE VOLUME FACTOR	1.68
SBR EFFLUENT CONTROL VALVE	AUTOMATED TO MAINTAIN MAXIMUM PRESET EFFLUENT FLOW RATE
CONTROL VALVE (MIN FLOW)	0.40 MGD
CONTROL VALVE (MAX FLOW)	0.703 MGD

EFFLUENT FILTER

EQUIPMENT	THREE (3) FILTER CELLS PEAK FLOW @ 0.470 MGD (2-CELLS OPERATE) PEAK FLOW @ 0.703 MGD (3-CELLS OPERATE)
CAPACITY	0.350 MGD ADF 0.703 MGD PEAK FLOW
CONTROLS	CONTINUOUS AIRLIFT BACKWASH INTERLOCKED TO FILTER FLOW- NO FLOW CONDITIONS

ULTRAVIOLET DISINFECTION

EQUIPMENT	THREE (3) U.V. BANKS (2) DUTY (1) STANDBY
CAPACITY	0.350 MGD ADF 0.703 MGD PEAK FLOW
CONTROLS	FLOW STAGED UV BANK CONTROL < 0.40 MGD REQUIRES 1-BANK > 0.40 MGD REQUIRES 2-BANKS

EX. PLANT EFFLUENT PUMPING STATION

EX. EQUIPMENT	TWO (2) PUMPS (1) DUTY (1) STANDBY
EX. CAPACITY	521 GPM OR 0.75 MGD
EX. CONTROLS	FLOAT CONTROLLED, FULLY AUTOMATIC

NOTE: SEE PLANT DESIGN CRITERIA FOR PLANT INFLUENT CHARACTERISTICS, PROCESS LOADING, PERFORMANCE, AND EFFLUENT QUALITY REQUIREMENTS.

LEGEND

- EXISTING PROCESS
- NEW PROCESS
- FACILITY EXTENTS

Drafting: CK Check: SA Design: RS Check: RS	DATE	REVISIONS	KCI TECHNOLOGIES	CONTRACT TITLE: TOWN OF WARSAW WASTEWATER TREATMENT PLANT ENR IMPROVEMENTS	OWNER: THE TOWN OF WARSAW, VA. P.O. BOX 730 WARSAW, VA 22572	SCALE: AS NOTED	DRAWING: WARSAW WASTEWATER TREATMENT PLANT EFFLUENT PUMP STATION LIQUID PROCESS DIAGRAM

SHEET:	DATE:	KCI JOB NO.:
FIG 3-3	OCTOBER, 2009	01-042641-a

Nov 16, 2009 – 11:13pm User: lanelowrank
M:\2001\01042641\Drawings\FIG 3-3 LIQUID PROCESS.dwg