FACILITY NAME: Town of Orange WWTP **VPDES PERMIT NUMBER:** VA0021385

VPDES SEWAGE SLUDGE PERMIT APPLICATION FORM

SCREENING INFORMATION

This application is divided into sections. Sections A pertain to all applicants. The applicability of Sections B, C and D depend on your facility's sewage sludge use or disposal practices. The information provided on this page will help you determine which sections to fill out.

1. All applicants must complete Section A (General Information).

2. Will this facility generate sewage sludge? X Yes __No

   Will this facility derive a material from sewage sludge? X Yes __No

   If you answered Yes to either, complete Section B (Generation Of Sewage Sludge Or Preparation Of A Material Derived From Sewage Sludge).

3. Will this facility apply sewage sludge to the land? __Yes X No

   Will sewage sludge from this facility be applied to the land? X Yes __No

   If you answered No to both questions above, skip Section C.

   If you answered Yes to either, answer the following three questions:

   a. Will the sewage sludge from this facility meet the ceiling concentrations, pollutant concentrations, Class A pathogen reduction requirements and one of the vector attraction reduction requirements 1-8, as identified in the instructions?
      X Yes __No

   b. Will sewage sludge from this facility be placed in a bag or other container for sale or give-away for application to the land? __Yes X No

   c. Will sewage sludge from this facility be sent to another facility for treatment or blending? __Yes X No

   If you answered No to all three, complete Section C (Land Application Of Bulk Sewage Sludge).

   If you answered Yes to a, b or c, skip Section C.

4. Do you own or operate a surface disposal site? __Yes X No

   If Yes, complete Section D (Surface Disposal).

FACILITY NAME: Town of Orange WWTP **VPDES PERMIT NUMBER:** VA0021385

SECTION A. GENERAL INFORMATION

All applicants must complete this section.

1. Facility Information.
   a. Facility name: Town of Orange Wastewater Treatment Plant (WWTP)
   b. Contact person: Greg Woods
      Title: Town Manager
      Phone: ( ) 540 672 5005
   c. Mailing address:
      Street or P.O. Box: 119 Belle View Ave
      City or Town: Orange State: VA Zip: 22960
   d. Facility location:
      Street or Route #: 13222 Spicers Mill Rd
      County: Orange
      City or Town: Orange State: VA Zip: 22960
   e. Is this facility a Class I sludge management facility? __Yes X No
   f. Facility design flow rate: 3.0 mgd
   g. Total population served: 3,500
   h. Indicate the type of facility:
      X Publicly owned treatment works (POTW)
      __ Privately owned treatment works
      __ Federally owned treatment works
      __ Blending or treatment operation
      __ Surface disposal site
      __ Other (describe): _____

2. Applicant Information. If the applicant is different from the above, provide the following:
   a. Applicant name: _____
   b. Mailing address:
      Street or P.O. Box: _____
      City or Town: _____ State: _____ Zip: _____
   c. Contact person: _____
      Title: _____
      Phone: ( ) _____
   d. Is the applicant the owner or operator (or both) of this facility?
      _____owner _____ operator
   e. Should correspondence regarding this permit be directed to the facility or the applicant? (Check one)
      _____ facility _____ applicant

3. Permit Information.
   a. Facility's VPDES permit number (if applicable): VA0021385
   b. List on this form or an attachment, all other federal, state or local permits or construction approvals received or applied for that regulate this facility's sewage sludge management practices:

Permit Number:	Type of Permit:
VAN020025	TN&TP Discharge + Nutrient Trading (General Permit)

4. Indian Country. Does any generation, treatment, storage, application to land or disposal of sewage sludge from this facility occur in Indian Country? __Yes X No If yes, describe:
   _____

FACILITY NAME: Town of Orange WWTP **VPDES PERMIT NUMBER:** VA0021385

5. Topographic Map. Provide a topographic map or maps (or other appropriate maps if a topographic map is unavailable) that shows the following information. Maps should include the area one mile beyond all property boundaries of the facility:
   a. Location of all sewage sludge management facilities, including locations where sewage sludge is generated, stored, treated, or disposed.
   b. Location of all wells, springs, and other surface water bodies listed in public records or otherwise known to the applicant within 1/4 mile of the property boundaries.

6. Line Drawing. Provide a line drawing and/or a narrative description that identifies all sewage sludge processes that will be employed during the term of the permit including all processes used for collecting, dewatering, storing, or treating sewage sludge, the destination(s) of all liquids and solids leaving each unit, and all methods used for pathogen reduction and vector attraction reduction.

7. Contractor Information. Are any operational or maintenance aspects of this facility related to sewage sludge generation, treatment, use or disposal the responsibility of a contractor? __Yes __No
   If yes, provide the following for each contractor (attach additional pages if necessary).
   Name: _____
   Mailing address:
   Street or P.O. Box: _____
   City or Town: _____ State: _____ Zip: _____
   Phone: ( ) _____
   Contractor's Federal, State or Local Permit Number(s) applicable to this facility's sewage sludge:
   _____
   If the contractor is responsible for the use and/or disposal of the sewage sludge, provide a description of the service to be provided to the applicant and the respective obligations of the applicant and the contractor(s).

8. Pollutant Concentrations. Using the table below or a separate attachment (TCLP, % Solids & Paint Filter results included), provide sewage sludge monitoring data for the pollutants which limits in sewage sludge have been established in 9 VAC 25-31-10 et seq. for this facility's expected use or disposal practices. All data must be based on three or more samples taken at least one month apart and must be no more than four and one-half years old. Plant disposes of dewatered cake at the Orange County Landfill.

POLLUTANT	CONCENTRATION (mg/kg dry weight)	SAMPLE DATE	ANALYTICAL METHOD	DETECTION LEVEL FOR ANALYSIS
Arsenic				
Cadmium				
Chromium				
Copper				
Lead				
Mercury				
Molybdenum				
Nickel				
Selenium				
Zinc				

9. Certification. Read and submit the following certification statement with this application. Refer to the instructions to determine who is an officer for purposes of this certification. Indicate which parts of the application you have completed and are submitting:

   ✓ Section A (General Information)
   ✓ Section B (Generation of Sewage Sludge or Preparation of a Material Derived from Sewage Sludge)
   ____Section C (Land Application of Bulk Sewage Sludge)
   ____Section D (Surface Disposal)

Town of Orange Wastewater Treatment Plant Description

The WWTP is designed to treat 3.0 MGD while meeting limits of CBOD <5.0 mg/L, TSS < 5.0 mg/L, TN < 4.0 mg/L, TP < 0.3 mg/L. The treatment process includes mechanical band screens, grit removal, 4-stage Bardenpho activated sludge process for biological nutrient removal, secondary clarifiers, disk filters, UV disinfection and cascade aeration. When pH adjustment is needed, Magnesium Hydroxide will be added at the beginning of the biological treatment process. Methanol or Micro-C Glycerin will be added at the second anoxic zone to achieve lower TN levels during cold months. Alum will be added before the clarifiers to aid settling and to facilitate the removal of copper and phosphorus. Influent pump station overflow, disk filter backwash, digester decant, belt press filtrate, tank drain water/sludge and water plant sludge will be sent to the Bio-augmentation tank were the water will be returned to the head of the biological treatment process and sludge will be sent to the aerated sludge holding tanks (ASHT). Sludge will be held in aerated sludge holding tanks and dewatered via belt filter press. The sludge will be disposed of at the Orange County Landfill. Land application via contract will be used as an alternate method of sludge disposal. The town will contact DEQ 90 days prior to land application of sludge with the contractor names. The contractors will fill out section C of the sludge application.

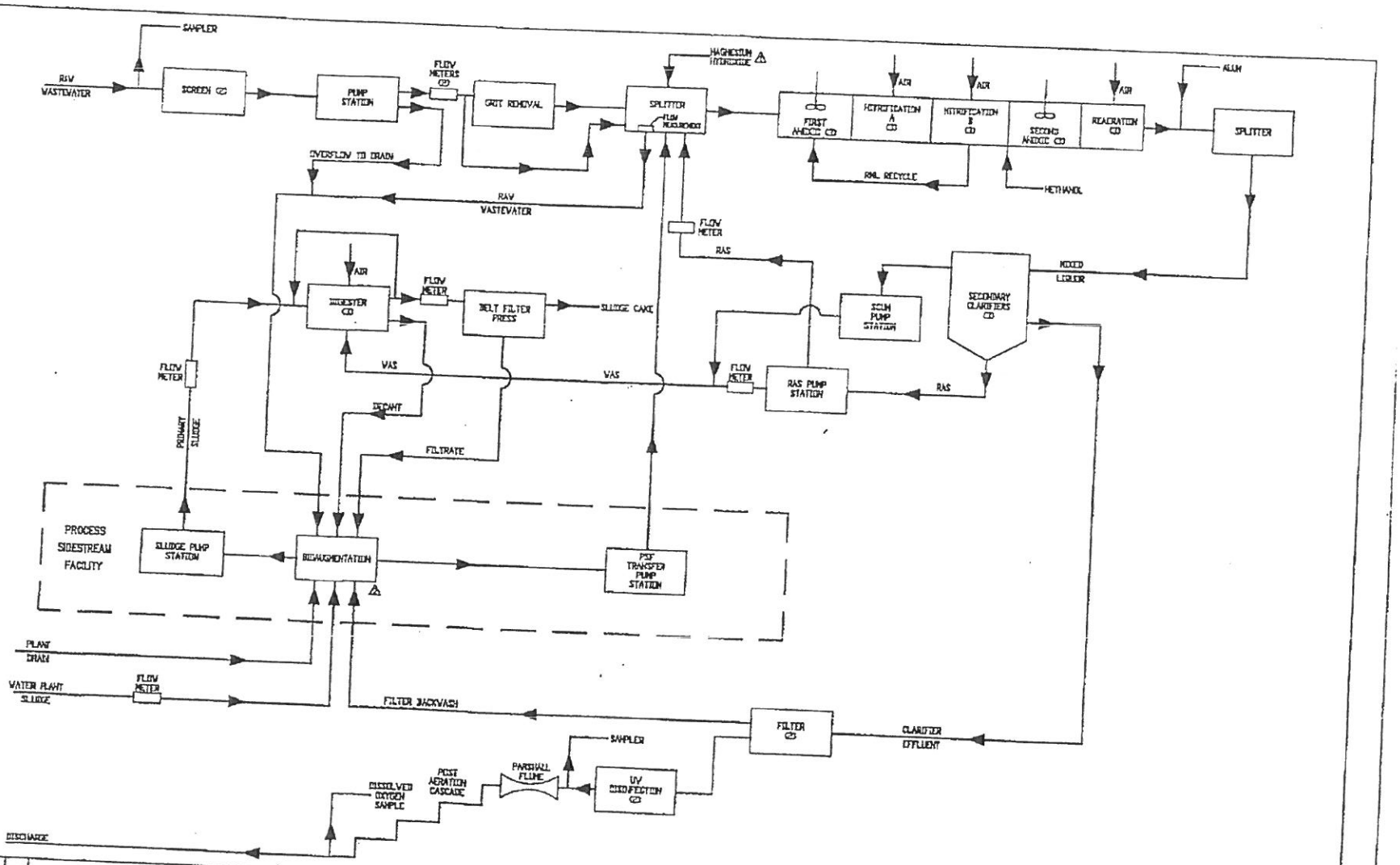

REV.	DATE	BY	APP.	DESCRIPTION
2	3/23/08	MWY		REVISION: DELETE SECONDARY CLARIFIERS
1	11/19/07	JRT		REVISION: ADDENDUM NO. 3
0				ISSUED FOR BID

Wiley & Wilson
Employee-Owned
2310 Langhorne Road
Lynchburg, VA 24501-1547
www.wileywilson.com

HOLLEMONTES
DEWBERRY ALLISON DEVINE
950 Encore Way
Naples, FL 34110
Phone: (239) 254-2000

DESIGNED HWY | DRAWN CCP
CHECKED HCP | REVIEWED RCB
DOMAIN NO. COUM | CTRL NO.
CADD NO. 84387773
DATE OCT. 15, 2007

PROJECT: Town of Orange Wastewater Treatment Plant
TITLE: PROCESS FLOW DIAGRAM
DWG NO. 1M3 | REV. 0

H:\2004\2004387\DWG\Contract Drawings\DESIGN REVISIONS\04387FFD.DWG, 2/11/2010 9:36:58 AM

FACILITY NAME: Town of Orange WWTP **VPDES PERMIT NUMBER:** VA0021385

I certify under penalty of law that this document and all attachments were prepared under my direction or supervision in accordance with a system designed to assure that qualified personnel properly gather and evaluate the information submitted. Based on my inquiry of the person or persons who manage the system or those persons directly responsible for gathering the information, the information is, to the best of my knowledge and belief, true, accurate and complete. I am aware that there are significant penalties for submitting false information, including the possibility of fine and imprisonment for knowing violations.

Name and official title Gregory S Woods, Town Manager

Signature Gregory S Woods Date Signed 1/14/16

Telephone number 540 672 5005

Upon request of the department, you must submit any other information necessary to assess sewage sludge use or disposal practices at your facility or identify appropriate permitting requirements.

FACILITY NAME: Town of Orange WWTP **VPDES PERMIT NUMBER:** VA0021385

SECTION B. GENERATION OF SEWAGE SLUDGE OR PREPARATION OF A MATERIAL DERIVED FROM SEWAGE SLUDGE

Complete this section if your facility generates sewage sludge or derives a material from sewage sludge

1. Amount Generated On Site.
   Total dry metric tons per 365-day period generated at your facility: 957 dry metric tons

2. N/A Amount Received from Off Site. If your facility receives sewage sludge from another facility for treatment, use or disposal, provide the following information for each facility from which sewage sludge is received. If you receive sewage sludge from more than one facility, attach additional pages as necessary.
   a. Facility name:_____
   b. Contact Person:_____
      Title: _____
      Phone ( )_____
   c. Mailing address:
      Street or P.O. Box:_____
      City or Town:_____ State:_____ Zip:_____
   d. Facility Address:_____
      (not P.O. Box) _____
   e. Total dry metric tons per 365-day period received from this facility:_____ dry metric tons
   f. Describe, on this form or on another sheet of paper, any treatment processes known to occur at the off-site facility, including blending activities and treatment to reduce pathogens or vector attraction characteristics:
      _____
      _____

3. Treatment Provided at Your Facility.
   a. Which class of pathogen reduction is achieved for the sewage sludge at your facility?
      __Class A X Class B __Neither or unknown
   b. Describe, on this form or another sheet of paper, any treatment processes used at your facility to reduce pathogens in sewage sludge: Aerated Sludge holding tanks Belt Filter Press Sludge disposed of Orange County Landfill – possible land application as Backup For Sludge Removal – We will Contract out For land application, IF ever needed.
   c. Which vector attraction reduction option is met for the sewage sludge at your facility?
      __ Option 1 (Minimum 38 percent reduction in volatile solids)
      __ Option 2 (Anaerobic process, with bench-scale demonstration)
      __ Option 3 (Aerobic process, with bench-scale demonstration)
      __ Option 4 (Specific oxygen uptake rate for aerobically digested sludge)
      __ Option 5 (Aerobic processes plus raised temperature)
      __ Option 6 (Raise pH to 12 and retain at 11.5)
      __ Option 7 (75 percent solids with no unstabilized solids)
      __ Option 8 (90 percent solids with unstabilized solids)
      __ None or unknown
   d. Describe, on this form or another sheet of paper, any treatment processes used at your facility to reduce vector attraction properties of sewage sludge:_____
      _____
   e. Describe, on this form or another sheet of paper, any other sewage sludge treatment activities, including blending, not identified in a - d above:_____
      _____

4. N/A Preparation of Sewage Sludge Meeting Ceiling and Pollutant Concentrations, Class A Pathogen Requirements and One of Vector Attraction Reduction Options 1-8 (EQ Sludge).
   (If sewage sludge from your facility does not meet all of these criteria, skip Question 4.)
   a. Total dry metric tons per 365-day period of sewage sludge subject to this section that is applied to the land:
      _____ dry metric tons
   b. Is sewage sludge subject to this section placed in bags or other containers for sale or give-away?

FACILITY NAME: Town of Orange WWTP **VPDES PERMIT NUMBER:** VA 0021385

__Yes __No

5. N/A Sale or Give-Away in a Bag or Other Container for Application to the Land.

(Complete this question if you place sewage sludge in a bag or other container for sale or give-away prior to land application. Skip this question if sewage sludge is covered in Question 4.)

a. Total dry metric tons per 365-day period of sewage sludge placed in a bag or other container at your facility for sale or give-away for application to the land:_____ dry metric tons

b. Attach, with this application, a copy of all labels or notices that accompany the sewage sludge being sold or given away in a bag or other container for application to the land.

6. N/A Shipment Off Site for Treatment or Blending.

(Complete this question if sewage sludge from your facility is sent to another facility that provides treatment or blending. This question does not apply to sewage sludge sent directly to a land application or surface disposal site. Skip this question if the sewage sludge is covered in Questions 4 or 5. If you send sewage sludge to more than one facility, attach additional sheets as necessary.)

a. Receiving facility name:_____

b. Facility contact: _____

Title: _____

Phone: ( )_____

c. Mailing address:

Street or P.O. Box:_____

City or Town:_____ State:_____ Zip:_____

d. Total dry metric tons per 365-day period of sewage sludge provided to receiving facility: _____ dry metric tons

e. List, on this form or an attachment, the receiving facility's VPDES permit number as well as the numbers of all other federal, state or local permits that regulate the receiving facility's sewage sludge use or disposal practices:

Permit Number:	Type of Permit:
_____	_____
_____	_____

f. Does the receiving facility provide additional treatment to reduce pathogens in sewage sludge from your facility? __Yes __No

Which class of pathogen reduction is achieved for the sewage sludge at the receiving facility?

__Class A __Class B __Neither or unknown

Describe, on this form or another sheet of paper, any treatment processes used at the receiving facility to reduce pathogens in sewage sludge:_____

_____

g. Does the receiving facility provide additional treatment to reduce vector attraction characteristics of the sewage sludge? __Yes __No

Which vector attraction reduction option is met for the sewage sludge at the receiving facility?

__ Option 1 (Minimum 38 percent reduction in volatile solids)
__ Option 2 (Anaerobic process, with bench-scale demonstration)
__ Option 3 (Aerobic process, with bench-scale demonstration)
__ Option 4 (Specific oxygen uptake rate for aerobically digested sludge)
__ Option 5 (Aerobic processes plus raised temperature)
__ Option 6 (Raise pH to 12 and retain at 11.5)
__ Option 7 (75 percent solids with no unstabilized solids)
__ Option 8 (90 percent solids with unstabilized solids)
__ None unknown

Describe, on this form or another sheet of paper, any treatment processes used at the receiving facility to reduce vector attraction properties of sewage sludge:_____

_____

h. Does the receiving facility provide any additional treatment or blending not identified in f or g above?

__Yes __No

If yes, describe, on this form or another sheet of paper, the treatment processes not identified in f or g above:

_____

_____

i. If you answered yes to f., g or h above, attach a copy of any information you provide to the receiving facility

to comply with the "notice and necessary information" requirement of 9 VAC 25-31-530.G.

j Does the receiving facility place sewage sludge from your facility in a bag or other container for sale or give-away for application to the land? ___Yes ___No
If yes, provide a copy of all labels or notices that accompany the product being sold or given away.

k. Will the sewage sludge be transported to the receiving facility in a truck-mounted watertight tank normally used for such purposes? ___ Yes ___ No. If no, provide description and specification on the vehicle used to transport the sewage sludge to the receiving facility.
Show the haul route(s) on a location map or briefly describe the haul route below and indicate the days of the week and the times of the day sewage sludge will be transported. _____

_____

_____

7. N/A Land Application of Bulk Sewage Sludge.
(Complete Question 7.a if sewage sludge from your facility is applied to the land, unless the sewage sludge is covered in Questions 4, 5 or 6; complete Question 7.b, c & d only if you are responsible for land application of sewage sludge.)

a. Total dry metric tons per 365-day period of sewage sludge applied to all land application sites:_____dry metric tons

b. Do you identify all land application sites in Section C of this application? ___Yes ___No
If no, submit a copy of the Land Application Plan (LAP) with this application (LAP should be prepared in accordance with the instructions).

c. Are any land application sites located in States other than Virginia? ___Yes ___No
If yes, describe, on this form or on another sheet of paper, how you notify the permitting authority for the States where the land application sites are located. Provide a copy of the notification.

_____

_____

d. Attach a copy of any information you provide to the owner or lease holder of the land application sites to comply with the "notice and necessary" information requirement of 9 VAC 25-31-530 F and/or H (Examples may be obtained in Appendix IV).

8. N/A Surface Disposal.
(Complete Question 8 if sewage sludge from your facility is placed on a surface disposal site.)

a. Total dry metric tons per 365-day period of sewage sludge from your facility placed on all surface disposal sites: _____ dry metric tons

b. Do you own or operate all surface disposal sites to which you send sewage sludge for disposal?
___Yes ___No
If no, answer questions c - g for each surface disposal site that you do not own or operate. If you send sewage sludge to more than one surface disposal site, attach additional pages as necessary.

c. Site name or number: _____

d. Contact person: _____
Title: _____
Phone: ( )_____
Contact is: ___Site Owner ___Site operator

e. Mailing address.
Street or P.O. Box:_____
City or Town:_____ State:_____ Zip:_____

f. Total dry metric tons per 365-day period of sewage sludge from your facility placed on this surface disposal site: _____ dry metric tons

g. List, on this form or an attachment, the surface disposal site VPDES permit number as well as the numbers of all other federal, state or local permits that regulate the sewage sludge use or disposal practices at the surface disposal site:

Permit Number:	Type of Permit:
_____	_____
_____	_____

9. N/A Incineration.
(Complete Question 9 if sewage sludge from your facility is fired in a sewage sludge incinerator.)

FACILITY NAME: Town of Orange WWTP **VPDES PERMIT NUMBER:** VA0071385

a. Total dry metric tons per 365-day period of sewage sludge from your facility fired in a sewage sludge incinerator: _____ dry metric tons

b. Do you own or operate all sewage sludge incinerators in which sewage sludge from your facility is fired?
___Yes ___No
If no, answer questions c - g for each sewage sludge incinerator that you do not own or operate. If you send sewage sludge to more than one sewage sludge incinerator, attach additional pages as necessary.

c. Incinerator name or number: _____

d. Contact person: _____
Title: _____
Phone: ( ) _____
Contact is: ___Incinerator Owner ___Incinerator Operator

e. Mailing address.
Street or P.O. Box: _____
City or Town: _____ State: _____ Zip: _____

f. Total dry metric tons per 365-day period of sewage sludge from your facility fired in this sewage sludge incinerator: _____ dry metric tons

g. List on this form or an attachment the numbers of all other federal, state or local permits that regulate the firing of sewage sludge at this incinerator:

Permit Number:	Type of Permit:

10. Disposal in a Municipal Solid Waste Landfill.

(Complete Question 10 if sewage sludge from your facility is placed on a municipal solid waste landfill. Provide the following information for each municipal solid waste landfill on which sewage sludge from your facility is placed. If sewage sludge is placed on more than one municipal solid waste landfill, attach additional pages as necessary.)

a. Landfill name: Orange County

b. Contact person: Roddy Clatterbuck
Title: Supervisor
Phone: ( ) 540 672 9315
Contact is: X Landfill Owner ___Landfill Operator

c. Mailing address.
Street or P.O. Box: 105 ~~Main~~ East Main St
City or Town: Orange State: VA Zip: 22960

d. Landfill location.
Street or Route #: 11530 Porter Rd
County: Orange
City or Town: Orange State: VA Zip: 22960

e. Total dry metric tons per 365-day period of sewage sludge placed in this municipal solid waste landfill: 957 dry metric tons

f. List, on this form or an attachment, the numbers of all federal, state or local permits that regulate the operation of this municipal solid waste landfill:

Permit Number:	Type of Permit:
566	MSW

g. Does sewage sludge meet applicable requirements in the Virginia Solid Waste Management Regulation, 9 VAC 20-80-10 et seq., concerning the quality of materials disposed in a municipal solid waste landfill?
X Yes ___No

h. Does the municipal solid waste landfill comply with all applicable criteria set forth in the Virginia Solid Waste Management Regulation, 9 VAC 20-80-10 et seq.? X Yes ___No

i. Will the vehicle bed or other container used to transport sewage sludge to the municipal solid waste landfill be watertight and covered? X Yes ___ No Covered Dump Truck
Show the haul route(s) on a location map or briefly describe the route below and indicate the days of the week and time of the day sewage sludge will be transported. From Plant - Right on Spicers Mill Rd Right on Monroe St, left on Main St, Right on Caroline Street, Left on Rt 20, Right on Porter Rd Haul 3 to 4 days a week (9am-2pm)

ORANGE COUNTY

DEPARTMENT OF PUBLIC WORKS

KURT L. HILDEBRAND
DIRECTOR
(540) 672-9600
FAX: (540) 672-9700

PO BOX 111
ORANGE, VIRGINIA 22960
khildebrand@orangecountyva.gov

January 11, 2016

Michelle Steinberger
Chief Operator
Town of Orange WWTP
13222 Spicers Mill Road
Orange, VA 22960

Re: Acceptance of Water/Wastewater Treatment Sludge

Dear Ms. Steinberger,

Please accept this letter as confirmation that the Orange County Sanitary Landfill, Permit #566, has in the past and will continue to accept sludge that is generated from the Town of Orange Water/Wastewater Facilities.

The acceptance of sludge is allowable under our current permit, provided the sludge is dewatered. We are not allowed to accept/dispose of free liquids. This is simply a reminder of our permit restrictions, not an indication of potential issues, as I do not recall any previous problems with the Town's sludge.

Should you have any questions or need anything further, please do not hesitate to contact my office.

Sincerely,

Kurt L. Hildebrand

Cc: Randy Clatterbuck, Landfill Supervisor

Date 01/12/16
Time 14:21:55

Orange County, VA

Material Analysis Report by Material

Inbound and outbound materials for the period 01/01/2015 - 12/31/2015
Summary Report for Sites: 2
Accounts 800129 - 800129 Customer Types - Z Materials 2DS - 2DS Material Types - ZZ

Date	Material	Type	Customer	Type	Tickets	Count	Est. vol.	Act. Vol.	Est. Wt.	Actual Wt.	Charge
	2DS										
				Total	100	0	0	0	956.58	956.58	49,742.16
				Average		0	0	0	9.57	9.57	497.42
				Report Total	100	0	0	0	956.58	956.58	49,742.16
				Report Average		0	0	0	9.57	9.57	497.42

FACILITY NAME: Town of Orange WWTP **VPDES PERMIT NUMBER:** VA0021385

SECTION C. LAND APPLICATION OF BULK SEWAGE SLUDGE

Complete this section for sewage sludge that is land applied unless any of the following conditions apply:

The sewage sludge meets the Table 1 ceiling concentrations, the Table 3 pollutant concentrations, Class A pathogen requirements and one of the vector attraction reduction options 1-8 (fill out B.4 instead) (EQ Sludge); or

The sewage sludge is sold or given away in a bag or other container for application to the land (fill out B.5 instead); or

You provide the sewage sludge to another facility for treatment or blending (fill out B.6 instead).

Complete Section C for every site on which the sewage sludge that you reported in B.7 is land applied.

1. Identification of Land Application Site.
   a. Site name or number: _____
   b. Site location (Complete i and ii)
      i. Street or Route#: _____
         County: _____
         City or Town: _____ State: _____ Zip: _____
      ii. Latitude: _____ Longitude: _____
         Method of latitude/longitude determination
         _____ USGS map _____ Filed survey _____ Other
   c. Topographic map. Provide a topographic map (or other appropriate map if a topographic map is unavailable) that shows the site location.

2. Owner Information.
   a. Are you the owner of this land application site? ___Yes ___No
   b. If no, provide the following information about the owner:
      Name: _____
      Street or P.O. Box: _____
      City or Town: _____ State: _____ Zip: _____
      Phone: ( ) _____

3. Applier Information:
   a. Are you the person who applies, or who is responsible for application of, sewage sludge to this land application site? ___Yes ___No
   b. If no, provide the following information for the person who applies the sewage sludge:
      Name: _____
      Street or P.O. Box: _____
      City or Town: _____ State: _____ Zip: _____
      Phone: ( ) _____
   c. List, on this form or an attachment, the numbers of all federal, state or local permits that regulate the person who applies sewage sludge to this land application site:

Permit Number:	Type of Permit:
_____	_____
_____	_____

4. Site Type. Identify the type of land application site from among the following:
   ___Agricultural land ___Reclamation site ___Forest
   ___Public contact site ___Other. Describe _____

5. Vector Attraction Reduction.
   Are any vector attraction reduction requirements met when sewage sludge is applied to the land application site?
   ____Yes ____No If yes, answer a and b.
   a. Indicate which vector attraction reduction option is met:
      ___ Option 9 (Injection below land surface)
      ___ Option 10 (Incorporation into soil within 6 hours)
   b. Describe, on this form or on another sheet of paper, any treatment processes used at the land application site to reduce the vector attraction properties of sewage sludge:
      _____
      _____

FACILITY NAME: Town of Orange WWTP **VPDES PERMIT NUMBER:** VA0021385

6. Cumulative Loadings and Remaining Allotments.

(Complete Question 6 only if the sewage sludge applied to this site since July 20, 1993 is subject to the cumulative pollutant loading rates (CPLRs) - see instructions.)

a. Have you contacted DEQ or the permitting authority in the state where the sewage sludge subject to the CPLRs will be applied to ascertain whether bulk sewage sludge subject to the CPLRs has been applied to this site since July 20, 1993? __Yes __No

If no, sewage sludge subject to the CPLRs may not be applied to this site.

If yes, provide the following information:

Permitting authority: _____

Contact person: _____

Phone:( ) _____

b. Based upon this inquiry, has bulk sewage sludge subject to the CPLRs been applied to this site since July 20, 1993? __Yes __No If no, skip the rest of Question 6. If yes, answer questions c - e.

c. Site size, in hectares: _____ (one hectare = 2.471 acres)

d. Provide the following information for every facility other than yours that is sending or has sent sewage sludge subject to the CPLRs to this site since July 20, 1993. If more than one such facility sends sewage sludge to this site, attach additional pages as necessary.

Facility name: _____

Facility contact: _____

Title: _____

Phone: ( ) _____

Mailing address.

Street or P.O. Box: _____

City or Town: _____ State: _____ Zip: _____

e. Provide the total loading and allotment remaining, in kg/hectare, for each of the following pollutants:

	Cumulative loading	Allotment remaining
Arsenic	_____	_____
Cadmium	_____	_____
Copper	_____	_____
Lead	_____	_____
Mercury	_____	_____
Nickel	_____	_____
Selenium	_____	_____
Zinc	_____	_____

Complete Questions 7-12 below only if you apply sewage sludge, or you are responsible for land application of sewage sludge. Information required by these questions may be prepared as attachments to this form. Skip the following questions if you contract land application to someone else (as indicated under Section A.7) who is responsible for the operation.

7. Sludge Characterization. Use the table below or a separate attachment, provide at least one analysis for each parameter.

PCBs (mg/kg)	_____
pH (S. U.)	_____
Percent Solids (%)	_____
Ammonium Nitrogen (mg/kg)	_____
Nitrate Nitrogen (mg/kg)	_____
Total Kjeldahl Nitrogen (mg/kg)	_____
Total Phosphorus (mg/kg)	_____
Total Potassium (mg/kg)	_____
Alkalinity as $CaCO_3$* (mg/kg)	_____

* Lime treated sludge (10% or more lime by dry weight) should be analyzed for percent $CaCO_3$.

8. Storage Requirements.

Existing and proposed sludge storage facilities must provide an estimated annual sludge balance on a monthly basis incorporating such factors as storage capacity, sludge production and land application schedule. Include pertinent calculations justifying storage requirements.

Proposed sludge storage facilities must also provide the following information:

a. A sludge storage site layout on a 7.5 minute topographic quadrangle or other appropriate scaled map to show the following topographic features of the surrounding landscape to a distance of 0.25 mile. Clearly mark the property line.
   1) Water wells, abandoned or operating
   2) Surface waters
   3) Springs
   4) Public water supply(s)
   5) Sinkholes
   6) Underground and/or surface mines
   7) Mine pool (or other) surface water discharge points
   8) Mining spoil piles and mine dumps
   9) Quarry(s)
   10) Sand and gravel pits
   11) Gas and oil wells
   12) Diversion ditch(s)
   13) Agricultural drainage ditch(s)
   14) Occupied dwellings, including industrial and commercial establishments
   15) Landfills or dumps
   16) Other unlined impoundments
   17) Septic tanks and drainfields
   18) Injection wells
   19) Rock outcrops

b. A topographic map of sufficient detail to clearly show the following information:
   1) Maximum and minimum percent slopes
   2) Depressions on the site that may collect water
   3) Drainageways that may attribute to rainfall run-on to or runoff from this site
   4) Portions of the site (if any) which are located with the 100-year floodplain and how the storage facility will be protected from flooding

c. Data and specifications for the storage facility lining material.

d. Plan and cross-sectional views of the storage facility.

e. Depth from the bottom of the storage facility to the seasonal high water table and separation distance to the permanent water table.

9. Land Area Requirements. Provide calculations justifying the land area requirements for land application of sewage sludge taking into consideration average soil productivity group, crop(s) to be grown and most limiting factor(s) of the sewage sludge, specifically Plant Available Nitrogen (PAN), Calcium Carbonate Equivalence (CCE), and metal loadings (CPLR sewage sludge only), where applicable. Relate PAN, CCE, and metal loadings to demonstrate the most limiting factor for land application.

10. Landowner Agreement Forms. Provide a properly completed Sewage Sludge Application Agreement Form (attached) for each landowner if sewage sludge is to be applied onto land not owned by the applicant.

11. Ground Water Monitoring.

Are any ground water monitoring data available for this land application site? ___Yes ___No

If yes, submit the ground water monitoring data with this permit application. Also submit a written description of the well locations, approximate depth to ground water, and the ground water monitoring procedures used to obtain these data.

12. Land Application Site Information.

(Complete Items a-d for sites receiving infrequent application - land application of sewage sludge up to the agronomic rate at a frequency of once in a 3 year period; complete Items a-h for sites receiving frequent application - land application of sewage sludge in excess of 70% the agronomic rate at a frequency greater than once in a 3 year period)

FACILITY NAME: Town of Orange WWTP **VPDES PERMIT NUMBER:** VA0021385

a. Provide a general location map for each county which clearly indicates the location of all the land application sites.

b. For each land application site provide a site plan of sufficient detail to clearly show the concerned landscape features and associated buffer zones (See instructions). Provide a legend for each landscape feature and the net acreage for each field taking into account the proposed buffer zones.

c. In order to ensure that land application of bulk sewage sludge will not impact federally listed threatened or endangered species or federally designated critical habitat, the applicant must notify the field office of the U. S. Department of the Interior, Fish and Wildlife Service (FWS), by a letter, the proposed land application activities with the identification of the land application sites. The address and phone number of FWS are provided below.

U. S. Fish and Wildlife Service
Virginia Field Office
P. O. Box 480
White Marsh, VA 23183
TEL: (804)693-6694

Provide a copy of the notification letter with this application form.

d. Provide a soil survey map, preferably photographically based, with the field boundaries clearly marked. (A USDA-SCS soil survey map should be provided, if available.)
Provide a detailed legend for each soil survey map which uses accepted USDA-SCS descriptions of the typifying pedon for each soil series (soil type). Complex associations may be described as a range of characteristics. Soil descriptions shall include as a minimum the following information.

1) Soil symbol
2) Soil series, textural phase and slope range
3) Depth to seasonal high water table
4) Depth to bedrock
5) Estimated soil productivity group (for the proposed crop rotation)

Item e - h are required for sites receiving frequent application of sewage sludge

e. In order to verify the information provided in item d, characterize the soil at each land application site. Representative soil borings or test pits to a depth of five feet or to bedrock if shallower, are to be coordinated for the typifying pedon of each soil series (soil type). Soil descriptions shall include as a minimum the following information:

1). Soil symbol
2). Soil series, textural phase and slope range
3). Depth to seasonal high water table
4). Depth to bedrock
5). Estimated soil productivity group (for the proposed crop rotation)

f. Collect and analyze soil samples from each field, weighted to best represent each of the soil borings performed for Item e. Using the table below or a separate attachment, provide at least one analysis per sample for each of the following parameters.

Soil Organic Matter (%)	_____
Soil pH (std. units)	_____
Cation Exchange Capacity (meq/100g)	_____
Total Nitrogen (ppm)	_____
Organic Nitrogen (ppm)	_____
Ammonia Nitrogen (ppm)	_____
Nitrate Nitrogen (ppm)	_____
Available Phosphorus (ppm)	_____
Exchangeable Potassium (mg/100g)	_____
Exchangeable Sodium (mg/100g)	_____
Exchangeable Calcium (mg/100g)	_____
Exchangeable Magnesium (mg/100g)	_____
Arsenic (ppm)	_____
Cadmium (ppm)	_____
Copper (ppm)	_____
Lead (ppm)	_____
Mercury (ppm)	_____
Molybdenum (ppm)	_____
Nickel (ppm)	_____
Selenium (ppm)	_____
Zinc (ppm)	_____
Manganese (ppm)	_____
Particle Size Analysis or USDA Textural Estimate (%)	_____

g. Relate the crop nutrient needs to anticipated yields, soil productivity rating and the various fertilizer or nutrient sources from sludge and chemical fertilizers. Describe any specialized agronomic management practices which may be required as a result of high soil pH. If the sludge is expected to possess an unusually high CCE or other unusual properties, provide a description of any plant tissue testing, supplemental fertilization or intensive agronomic management practices which may be necessary.

h. Using a narrative format and referencing any related charts, describe the proposed cropping system. Show how the crop rotation and management will be coordinated with the design of the land application system. Include any supplemental fertilization program, soil testing and the coordination of tillage practices, planting and harvesting schedules and timing of land application.

FACILITY NAME: Town of Orange WWTP **VPDES PERMIT NUMBER:** VA0021385

SEWAGE SLUDGE APPLICATION AGREEMENT

This sewage sludge application agreement is made on this date _____ between _____, referred to here as "landowner", and _____, referred to here as the "Permittee".

Landowner is the owner of agricultural land shown on the map attached as Exhibit A and designated there as _____ ("landowner's land"). Permittee agrees to apply and landowner agrees to comply with certain permit requirements following application of sewage sludge on landowner's land in amounts and in a manner authorized by VPDES permit number _____ which is held by the Permittee.

Landowner acknowledges that the appropriate application of sewage sludge will be beneficial in providing fertilizer and soil conditioning to the property. Moreover, landowner acknowledges having been expressly advised that, in order to protect public health, the following site restrictions must be adhered to when sewage sludge receives Class B treatment for pathogen reduction:

1. Food crops with harvested parts that touch the sewage sludge/soil mixture and are totally above the land surface shall not be harvested for 14 months after application of sewage sludge;

2. Food crops with harvested parts below the surface of the land shall not be harvested for 20 months after application of sewage sludge when the sewage sludge remains on the land surface for four months or longer prior to incorporation into the soil;

3. Food crops with harvested parts below the surface of the land shall not be harvested for 38 months after application of sewage sludge when the sewage sludge remains on the land surface for less than four months prior to incorporation into the soil;

4. Food crops, feed crops, and fiber crops shall not be harvested for 30 days after application of sewage sludge;

5. Animals shall not be grazed on the land for 30 days after application of sewage sludge;

6. Turf grown on land where sewage sludge is applied shall not be harvested for one year after application of the sewage sludge when the harvested turf is placed on either land with a high potential for public exposure or a lawn, unless otherwise specified by the State Water Control Board;

7. Public access to land with a high potential for public exposure shall be restricted for one year after application of sewage sludge;

8. Public access to land with a low potential for public exposure shall be restricted for 30 days after application of sewage sludge.

9. Tobacco, because it has been shown to accumulate cadmium, should not be grown on landowner's land for three years following the application of sewage sludge borne cadmium equal to or exceeding 0.5 kilograms/hectare (0.45 pounds/acre).

Permittee agrees to notify landowner or landowner's designee of the proposed schedule for sewage sludge application and specifically prior to any particular application to landowner's land. This agreement may be terminated by either party upon written notice to the address specified below.

Landowner:	Permittee:
_____	_____
Signature	Signature
_____	_____
Mailing Address	Mailing Address

FACILITY NAME: Town of Orange WWTP **VPDES PERMIT NUMBER:** VA0021385

SECTION D. SURFACE DISPOSAL

Complete this section only if you own or operate a surface disposal site. Provide the information for each active sewage sludge unit.

1. Information on Active Sewage Sludge Units.
   a. Unit name or number: _____
   b. Unit location
      i. Street or Route#: _____
         County: _____
         City or Town: _____ State: _____ Zip: _____
      ii. Latitude:_____ Longitude:_____
         Method of latitude/longitude determination
         _____ USGS map _____ Filed survey _____ Other
   c. Topographic map. Provide a topographic map (or other appropriate map if a topographic map is unavailable) that shows the site location.
   d. Total dry metric tons of sewage sludge placed on the active sewage sludge unit per 365-day period: _____dry metric tons.
   e. Total dry metric tons of sewage sludge placed on the active sewage sludge unit over the life of the unit: _____ dry metric tons.
   f. Does the active sewage sludge unit have a liner with a minimum hydraulic conductivity of 1×10^{-7}cm/sec? ___Yes ___No If yes, describe the liner or attach a description.
      _____
      _____
   g. Does the active sewage sludge unit have a leachate collection system? ___Yes ___No
      If yes, describe the leachate collection system or attach a description. Also, describe the method used for leachate disposal and provide the numbers of any federal, state or local permits for leachate disposal:
      _____
      _____
      _____
   h. If you answered no to either f or g, answer the following:
      Is the boundary of the active sewage sludge unit less than 150 meters from the property line of the surface disposal site? ___Yes ___No If yes, provide the actual distance in meters:_____
   i. Remaining capacity of active sewage sludge unit, in dry metric tons:_____ dry metric tons
      Anticipated closure date for active sewage sludge unit, if known:_____ (MM/DD/YYYY)
      Provide with this application a copy of any closure plan developed for this active sewage sludge unit.

2. Sewage Sludge from Other Facilities.
   Is sewage sludge sent to this active sewage sludge unit from any facilities other than yours? ___Yes ___No
   If yes, provide the following information for each such facility, attach additional sheets as necessary.
   a. Facility name:_____
   b. Facility contact: _____
      Title: _____
      Phone: ( )_____
   c. Mailing address.
      Street or P.O. Box:_____
      City or Town:_____ State:_____ Zip:_____
   d. List, on this form or an attachment, the facility's VPDES permit number as well as the numbers of all other federal, state or local permits that regulate the facility's sewage sludge management practices:

Permit Number:	Type of Permit:
_____	_____
_____	_____

   e. Which class of pathogen reduction is achieved before sewage sludge leaves the other facility?
      ___Class A ___Class B ___Neither or unknown
   f. Describe, on this form or on another sheet of paper, any treatment processes used at the other facility to reduce pathogens in sewage sludge:_____
      _____
      _____

g. Which vector attraction reduction option is achieved before sewage sludge leaves the other facility?
___ Option 1 (Minimum 38 percent reduction in volatile solids)
___ Option 2 (Anaerobic process, with bench-scale demonstration)
___ Option 3 (Aerobic process, with bench-scale demonstration)
___ Option 4 (Specific oxygen uptake rate for aerobically digested sludge)
___ Option 5 (Aerobic processes plus raised temperature)
___ Option 6 (Raise pH to 12 and retain at 11.5)
___ Option 7 (75 percent solids with no unstabilized solids)
___ Option 8 (90 percent solids with unstabilized solids)
___ None or unknown

h. Describe, on this form or another sheet of paper, any treatment processes used at the other facility to reduce vector attraction properties of sewage sludge:_____
_____
_____

i. Describe, on this form or another sheet of paper, any other sewage sludge treatment activities performed by the other facility that are not identified in e - h above:_____
_____
_____

3. Vector Attraction Reduction.

a. Which vector attraction reduction option, if any, is met when sewage sludge is placed on this active sewage sludge unit?
___ Option 9 (Injection below land surface)
___ Option 10 (Incorporation into soil within 6 hours)
___ Option 11 (Covering active sewage sludge unit daily)

b. Describe, on this form or another sheet of paper, any treatment processes used at the active sewage sludge unit to reduce vector attraction properties of sewage sludge: _____
_____
_____

4. Ground Water Monitoring.

a. Is ground water monitoring currently conducted at this active sewage sludge unit or are ground water monitoring data otherwise available for this active sewage sludge unit? ___Yes ___No
If yes, provide a copy of available ground water monitoring data. Also provide a written description of the well locations, the approximate depth to ground water, and the ground water monitoring procedures used to obtain these data.

b. Has a ground water monitoring program been prepared for this active sewage sludge unit?
___Yes ___No If yes, submit a copy of the ground water monitoring program with this application.

c. Have you obtained a certification from a qualified ground water scientist that the aquifer below the active sewage sludge unit has not been contaminated? ___Yes ___No
If yes, submit a copy of the certification with this application.

5. Site-Specific Limits.
Are you seeking site-specific pollutant limits for the sewage sludge placed on the active sewage sludge unit?
___Yes ___No If yes, submit information to support the request for site-specific pollutant limits with this application.

Pace Analytical Services, Inc.
9800 Kincey Ave. Suite 100
Huntersville, NC 28078
(704)875-9092

October 08, 2015

Michelle Stienburger
Town of Orange WWTP
13222 Spicers Mill Rd
Orange, VA 22960

RE: Project: SLUDGE TESTING
Pace Project No.: 92269187

Dear Michelle Stienburger:
Enclosed are the analytical results for sample(s) received by the laboratory on September 24, 2015. The results relate only to the samples included in this report. Results reported herein conform to the most current TNI standards and the laboratory's Quality Assurance Manual, where applicable, unless otherwise noted in the body of the report.

Analyses were performed at the Pace Analytical Services location indicated on the sample analyte page for analysis unless otherwise footnoted.

If you have any questions concerning this report, please feel free to contact me.

Sincerely,

Brittany L Gibson

Brittany Gibson
brittany.gibson@pacelabs.com
Project Coordinator

Enclosures

This report shall not be reproduced, except in full,
without the written consent of Pace Analytical Services, Inc..

Pace Analytical Services, Inc.
9800 Kincey Ave. Suite 100
Huntersville, NC 28078
(704)875-9092

SAMPLE ANALYTE COUNT

Project: SLUDGE TESTING
Pace Project No.: 92269187

Lab ID	Sample ID	Method	Analysts	Analytes Reported	Laboratory
92269187001	**BFP CAKE**	EPA 8081	SWB	8	PASI-C
		EPA 8151	LJM	3	PASI-O
		EPA 6010	JMW	7	PASI-A
		EPA 7470	SH1	1	PASI-A
		EPA 8270	BPJ	18	PASI-C
		EPA 8260	DLK	14	PASI-C
		SM 2540G	KDF	1	PASI-C
		ASTM D2974-87	KDF	1	PASI-C
		EPA 9095	MLS	1	PASI-A

This report shall not be reproduced, except in full,
without the written consent of Pace Analytical Services, Inc..

Pace Analytical Services, Inc.
9800 Kincey Ave. Suite 100
Huntersville, NC 28078
(704)875-9092

ANALYTICAL RESULTS

Project: SLUDGE TESTING
Pace Project No.: 92269187

Sample: BFP CAKE **Lab ID: 92269187001** Collected: 09/23/15 08:00 Received: 09/24/15 09:35 Matrix: Solid

Results reported on a "dry weight" basis and are adjusted for percent moisture, sample size and any dilutions.

Parameters	Results	Units	Report Limit	DF	Prepared	Analyzed	CAS No.	Qual
8081 GCS Pesticides, TCLP	Analytical Method: EPA 8081 Preparation Method: EPA 3510							
	Leachate Method/Date: EPA 1311; 10/05/14 15:00							
gamma-BHC (Lindane)	ND	ug/L	0.50	1	10/06/15 13:00	10/06/15 17:53	58-89-9	
Chlordane (Technical)	ND	ug/L	3.0	1	10/06/15 13:00	10/06/15 17:53	57-74-9	
Endrin	ND	ug/L	0.50	1	10/06/15 13:00	10/06/15 17:53	72-20-8	
Heptachlor epoxide	ND	ug/L	0.50	1	10/06/15 13:00	10/06/15 17:53	1024-57-3	
Methoxychlor	ND	ug/L	1000	1	10/06/15 13:00	10/06/15 17:53	72-43-5	
Toxaphene	ND	ug/L	3.0	1	10/06/15 13:00	10/06/15 17:53	8001-35-2	
Surrogates								
Decachlorobiphenyl (S)	61	%	10-138	1	10/06/15 13:00	10/06/15 17:53	2051-24-3	
Tetrachloro-m-xylene (S)	61	%	10-110	1	10/06/15 13:00	10/06/15 17:53	877-09-8	
8151 Chlorinate Herbicide TCLP	Analytical Method: EPA 8151 Preparation Method: EPA 3510							
2,4-D	ND	mg/L	0.010	1	10/06/15 15:35	10/07/15 16:06	94-75-7	
2,4,5-TP (Silvex)	ND	mg/L	0.010	1	10/06/15 15:35	10/07/15 16:06	93-72-1	
Surrogates								
2,4-DCAA (S)	94	%	42-142	1	10/06/15 15:35	10/07/15 16:06	19719-28-9	
6010 MET ICP, TCLP	Analytical Method: EPA 6010 Preparation Method: EPA 3010							
	Leachate Method/Date: EPA 1311; 09/09/15 00:30							
Arsenic	ND	mg/L	0.050	1	09/29/15 22:30	09/30/15 16:24	7440-38-2	
Barium	ND	mg/L	0.25	1	09/29/15 22:30	09/30/15 16:24	7440-39-3	
Cadmium	ND	mg/L	0.0050	1	09/29/15 22:30	09/30/15 16:24	7440-43-9	
Chromium	ND	mg/L	0.025	1	09/29/15 22:30	09/30/15 16:24	7440-47-3	
Lead	ND	mg/L	0.025	1	09/29/15 22:30	09/30/15 16:24	7439-92-1	
Selenium	ND	mg/L	0.10	1	09/29/15 22:30	09/30/15 16:24	7782-49-2	
Silver	ND	mg/L	0.025	1	09/29/15 22:30	09/30/15 16:24	7440-22-4	
7470 Mercury, TCLP	Analytical Method: EPA 7470 Preparation Method: EPA 7470							
	Leachate Method/Date: EPA 1311; 09/09/15 00:30							
Mercury	ND	mg/L	0.00020	1	09/30/15 11:05	09/30/15 16:51	7439-97-6	
8270 MSSV TCLP Sep Funnel	Analytical Method: EPA 8270 Preparation Method: EPA 3510							
	Leachate Method/Date: EPA 1311; 10/05/14 15:00							
1,4-Dichlorobenzene	ND	ug/L	50.0	1	10/06/15 11:20	10/07/15 10:58	106-46-7	
2,4-Dinitrotoluene	ND	ug/L	50.0	1	10/06/15 11:20	10/07/15 10:58	121-14-2	
Hexachloro-1,3-butadiene	ND	ug/L	50.0	1	10/06/15 11:20	10/07/15 10:58	87-68-3	
Hexachlorobenzene	ND	ug/L	50.0	1	10/06/15 11:20	10/07/15 10:58	118-74-1	
Hexachloroethane	ND	ug/L	50.0	1	10/06/15 11:20	10/07/15 10:58	67-72-1	
2-Methylphenol(o-Cresol)	**66.3**	ug/L	50.0	1	10/06/15 11:20	10/07/15 10:58	95-48-7	
3&4-Methylphenol(m&p Cresol)	ND	ug/L	50.0	1	10/06/15 11:20	10/07/15 10:58		
Nitrobenzene	ND	ug/L	50.0	1	10/06/15 11:20	10/07/15 10:58	98-95-3	
Pentachlorophenol	ND	ug/L	100	1	10/06/15 11:20	10/07/15 10:58	87-86-5	
Pyridine	ND	ug/L	50.0	1	10/06/15 11:20	10/07/15 10:58	110-86-1	
2,4,5-Trichlorophenol	ND	ug/L	50.0	1	10/06/15 11:20	10/07/15 10:58	95-95-4	
2,4,6-Trichlorophenol	ND	ug/L	50.0	1	10/06/15 11:20	10/07/15 10:58	88-06-2	

This report shall not be reproduced, except in full,
without the written consent of Pace Analytical Services, Inc..

Pace Analytical Services, Inc.
9800 Kincey Ave. Suite 100
Huntersville, NC 28078
(704)875-9092

CERTIFICATIONS

Project: SLUDGE TESTING
Pace Project No.: 92269187

Ormond Beach Certification IDs
8 East Tower Circle, Ormond Beach, FL 32174
Alabama Certification #: 41320
Connecticut Certification #: PH-0216
Delaware Certification: FL NELAC Reciprocity
Florida Certification #: E83079
Georgia Certification #: 955
Guam Certification: FL NELAC Reciprocity
Hawaii Certification: FL NELAC Reciprocity
Illinois Certification #: 200068
Indiana Certification: FL NELAC Reciprocity
Kansas Certification #: E-10383
Kentucky Certification #: 90050
Louisiana Certification #: FL NELAC Reciprocity
Louisiana Environmental Certificate #: 05007
Maryland Certification: #346
Michigan Certification #: 9911
Mississippi Certification: FL NELAC Reciprocity
Missouri Certification #: 236
Montana Certification #: Cert 0074
Nebraska Certification: NE-OS-28-14
Nevada Certification: FL NELAC Reciprocity
New Hampshire Certification #: 2958
New York Certification #: 11608
North Carolina Environmental Certificate #: 667
North Carolina Certification #: 12710
North Dakota Certification #: R-216
Pennsylvania Certification #: 68-00547
Puerto Rico Certification #: FL01264
South Carolina Certification: #96042001
Tennessee Certification #: TN02974
Texas Certification: FL NELAC Reciprocity
US Virgin Islands Certification: FL NELAC Reciprocity
Virginia Environmental Certification #: 460165
West Virginia Certification #: 9962C
Wisconsin Certification #: 399079670
Wyoming (EPA Region 8): FL NELAC Reciprocity

Charlotte Certification IDs
9800 Kincey Ave. Ste 100, Huntersville, NC 28078
North Carolina Drinking Water Certification #: 37706
North Carolina Field Services Certification #: 5342
North Carolina Wastewater Certification #: 12
South Carolina Certification #: 99006001
Florida/NELAP Certification #: E87627
Kentucky UST Certification #: 84
West Virginia Certification #: 357
Virginia/VELAP Certification #: 460221

Asheville Certification IDs
2225 Riverside Drive, Asheville, NC 28804
Florida/NELAP Certification #: E87648
Massachusetts Certification #: M-NC030
North Carolina Drinking Water Certification #: 37712
North Carolina Wastewater Certification #: 40
South Carolina Certification #: 99030001
West Virginia Certification #: 356
Virginia/VELAP Certification #: 460222

This report shall not be reproduced, except in full,
without the written consent of Pace Analytical Services, Inc..

Pace Analytical Services, Inc.
9800 Kincey Ave. Suite 100
Huntersville, NC 28078
(704)875-9092

ANALYTICAL RESULTS

Project: SLUDGE TESTING
Pace Project No.: 92269187

Sample: BFP CAKE **Lab ID: 92269187001** Collected: 09/23/15 08:00 Received: 09/24/15 09:35 Matrix: Solid

Results reported on a "dry weight" basis and are adjusted for percent moisture, sample size and any dilutions.

Parameters	Results	Units	Report Limit	DF	Prepared	Analyzed	CAS No.	Qual
8270 MSSV TCLP Sep Funnel	Analytical Method: EPA 8270 Preparation Method: EPA 3510 Leachate Method/Date: EPA 1311; 10/05/14 15:00							
Surrogates								
Nitrobenzene-d5 (S)	33	%	12-102	1	10/06/15 11:20	10/07/15 10:58	4165-60-0	
2-Fluorobiphenyl (S)	39	%	13-107	1	10/06/15 11:20	10/07/15 10:58	321-60-8	
Terphenyl-d14 (S)	82	%	21-132	1	10/06/15 11:20	10/07/15 10:58	1718-51-0	
Phenol-d6 (S)	20	%	10-110	1	10/06/15 11:20	10/07/15 10:58	13127-88-3	
2-Fluorophenol (S)	29	%	10-110	1	10/06/15 11:20	10/07/15 10:58	367-12-4	
2,4,6-Tribromophenol (S)	65	%	27-108	1	10/06/15 11:20	10/07/15 10:58	118-79-6	
8260 MSV TCLP	Analytical Method: EPA 8260 Leachate Method/Date: EPA 1311; 10/01/15 14:43							
Benzene	ND	ug/L	5.0	1		10/02/15 04:30	71-43-2	
2-Butanone (MEK)	ND	ug/L	10.0	1		10/02/15 04:30	78-93-3	
Carbon tetrachloride	ND	ug/L	5.0	1		10/02/15 04:30	56-23-5	
Chlorobenzene	ND	ug/L	5.0	1		10/02/15 04:30	108-90-7	
Chloroform	ND	ug/L	5.0	1		10/02/15 04:30	67-66-3	
1,4-Dichlorobenzene	ND	ug/L	5.0	1		10/02/15 04:30	106-46-7	
1,2-Dichloroethane	ND	ug/L	5.0	1		10/02/15 04:30	107-06-2	
1,1-Dichloroethene	ND	ug/L	5.0	1		10/02/15 04:30	75-35-4	
Tetrachloroethene	ND	ug/L	5.0	1		10/02/15 04:30	127-18-4	
Trichloroethene	ND	ug/L	5.0	1		10/02/15 04:30	79-01-6	
Vinyl chloride	ND	ug/L	5.0	1		10/02/15 04:30	75-01-4	
Surrogates								
1,2-Dichloroethane-d4 (S)	128	%	70-130	1		10/02/15 04:30	17060-07-0	1g
Toluene-d8 (S)	102	%	67-135	1		10/02/15 04:30	2037-26-5	
4-Bromofluorobenzene (S)	94	%	70-130	1		10/02/15 04:30	460-00-4	
2540G Total Percent Solids	Analytical Method: SM 2540G							
Total Solids	**18.5**	%	0.000010	1		09/29/15 13:29		
Percent Moisture	Analytical Method: ASTM D2974-87							
Percent Moisture	**81.5**	%	0.10	1		09/29/15 17:36		
9095 Paint Filter Liquid Test	Analytical Method: EPA 9095							
Free Liquids	**PASS**		1.0	1		10/05/15 10:48		

This report shall not be reproduced, except in full,
without the written consent of Pace Analytical Services, Inc..

Pace Analytical Services, Inc.
9800 Kincey Ave. Suite 100
Huntersville, NC 28078
(704)875-9092

QUALITY CONTROL DATA

Project: SLUDGE TESTING
Pace Project No.: 92269187

QC Batch: MERP/8432
QC Batch Method: EPA 7470
Analysis Method: EPA 7470
Analysis Description: 7470 Mercury TCLP
Associated Lab Samples: 92269187001

METHOD BLANK: 1570391
Matrix: Water
Associated Lab Samples: 92269187001

Parameter	Units	Blank Result	Reporting Limit	Analyzed	Qualifiers
Mercury	mg/L	ND	0.00020	09/30/15 15:55	

LABORATORY CONTROL SAMPLE: 1570392

Parameter	Units	Spike Conc.	LCS Result	LCS % Rec	% Rec Limits	Qualifiers
Mercury	mg/L	.0025	0.0024	94	80-120	

MATRIX SPIKE & MATRIX SPIKE DUPLICATE: 1570393 1570394

Parameter	Units	92269105002 Result	MS Spike Conc.	MSD Spike Conc.	MS Result	MSD Result	MS % Rec	MSD % Rec	% Rec Limits	RPD	Qual
Mercury	mg/L	ND	.0025	.0025	0.0020	0.0020	79	79	75-125	1	

Results presented on this page are in the units indicated by the "Units" column except where an alternate unit is presented to the right of the result.

This report shall not be reproduced, except in full,
without the written consent of Pace Analytical Services, Inc..

Pace Analytical Services, Inc.
9800 Kincey Ave. Suite 100
Huntersville, NC 28078
(704)875-9092

QUALITY CONTROL DATA

Project: SLUDGE TESTING
Pace Project No.: 92269187

QC Batch: MPRP/19670
QC Batch Method: EPA 3010
Analysis Method: EPA 6010
Analysis Description: 6010 MET TCLP
Associated Lab Samples: 92269187001

METHOD BLANK: 1570276
Matrix: Water
Associated Lab Samples: 92269187001

Parameter	Units	Blank Result	Reporting Limit	Analyzed	Qualifiers
Arsenic	mg/L	ND	0.050	09/30/15 15:43	
Barium	mg/L	ND	0.25	09/30/15 15:43	
Cadmium	mg/L	ND	0.0050	09/30/15 15:43	
Chromium	mg/L	ND	0.025	09/30/15 15:43	
Lead	mg/L	ND	0.025	09/30/15 15:43	
Selenium	mg/L	ND	0.10	09/30/15 15:43	
Silver	mg/L	ND	0.025	09/30/15 15:43	

LABORATORY CONTROL SAMPLE: 1570277

Parameter	Units	Spike Conc.	LCS Result	LCS % Rec	% Rec Limits	Qualifiers
Arsenic	mg/L	2.5	2.5	100	80-120	
Barium	mg/L	2.5	2.4	95	80-120	
Cadmium	mg/L	2.5	2.5	99	80-120	
Chromium	mg/L	2.5	2.5	99	80-120	
Lead	mg/L	2.5	2.3	93	80-120	
Selenium	mg/L	2.5	2.4	98	80-120	
Silver	mg/L	1.2	1.2	98	80-120	

MATRIX SPIKE & MATRIX SPIKE DUPLICATE: 1570278 1570279

Parameter	Units	92269105002 Result	MS Spike Conc.	MSD Spike Conc.	MS Result	MSD Result	MS % Rec	MSD % Rec	% Rec Limits	RPD	Qual
Arsenic	mg/L	ND	2.5	2.5	2.4	2.5	96	101	75-125	6	
Barium	mg/L	0.30	2.5	2.5	2.7	2.8	94	99	75-125	4	
Cadmium	mg/L	ND	2.5	2.5	2.4	2.5	96	101	75-125	5	
Chromium	mg/L	ND	2.5	2.5	2.4	2.5	96	100	75-125	4	
Lead	mg/L	ND	2.5	2.5	2.3	2.4	92	96	75-125	5	
Selenium	mg/L	ND	2.5	2.5	2.4	2.5	95	100	75-125	5	
Silver	mg/L	ND	1.2	1.2	1.2	1.2	92	97	75-125	5	

Results presented on this page are in the units indicated by the "Units" column except where an alternate unit is presented to the right of the result.

This report shall not be reproduced, except in full,
without the written consent of Pace Analytical Services, Inc..

Pace Analytical Services, Inc.
9800 Kincey Ave. Suite 100
Huntersville, NC 28078
(704)875-9092

QUALITY CONTROL DATA

Project: SLUDGE TESTING
Pace Project No.: 92269187

QC Batch: MSV/33619
QC Batch Method: EPA 8260
Analysis Method: EPA 8260
Analysis Description: 8260 MSV TCLP
Associated Lab Samples: 92269187001

METHOD BLANK: 1572466
Matrix: Water
Associated Lab Samples: 92269187001

Parameter	Units	Blank Result	Reporting Limit	Analyzed	Qualifiers
1,1-Dichloroethene	ug/L	ND	5.0	10/01/15 18:33	
1,2-Dichloroethane	ug/L	ND	5.0	10/01/15 18:33	
1,4-Dichlorobenzene	ug/L	ND	5.0	10/01/15 18:33	
2-Butanone (MEK)	ug/L	ND	10.0	10/01/15 18:33	
Benzene	ug/L	ND	5.0	10/01/15 18:33	
Carbon tetrachloride	ug/L	ND	5.0	10/01/15 18:33	
Chlorobenzene	ug/L	ND	5.0	10/01/15 18:33	
Chloroform	ug/L	ND	5.0	10/01/15 18:33	
Tetrachloroethene	ug/L	ND	5.0	10/01/15 18:33	
Trichloroethene	ug/L	ND	5.0	10/01/15 18:33	
Vinyl chloride	ug/L	ND	5.0	10/01/15 18:33	
1,2-Dichloroethane-d4 (S)	%	110	70-130	10/01/15 18:33	
4-Bromofluorobenzene (S)	%	92	70-130	10/01/15 18:33	
Toluene-d8 (S)	%	103	67-135	10/01/15 18:33	

LABORATORY CONTROL SAMPLE: 1572467

Parameter	Units	Spike Conc.	LCS Result	LCS % Rec	% Rec Limits	Qualifiers
1,1-Dichloroethene	ug/L	50	54.8	110	66-135	
1,2-Dichloroethane	ug/L	50	49.9	100	67-128	
1,4-Dichlorobenzene	ug/L	50	49.5	99	78-130	
2-Butanone (MEK)	ug/L	100	115	115	61-144	
Benzene	ug/L	50	49.1	98	80-125	
Carbon tetrachloride	ug/L	50	45.1	90	69-131	
Chlorobenzene	ug/L	50	47.2	94	81-122	
Chloroform	ug/L	50	50.7	101	73-127	
Tetrachloroethene	ug/L	50	39.2	78	78-122	
Trichloroethene	ug/L	50	47.0	94	78-122	
Vinyl chloride	ug/L	50	56.0	112	58-137	
1,2-Dichloroethane-d4 (S)	%			109	70-130	
4-Bromofluorobenzene (S)	%			91	70-130	
Toluene-d8 (S)	%			101	67-135	

Results presented on this page are in the units indicated by the "Units" column except where an alternate unit is presented to the right of the result.

This report shall not be reproduced, except in full,
without the written consent of Pace Analytical Services, Inc..

Pace Analytical Services, Inc.
9800 Kincey Ave. Suite 100
Huntersville, NC 28078
(704)875-9092

QUALITY CONTROL DATA

Project: SLUDGE TESTING
Pace Project No.: 92269187

QC Batch: OEXT/38186
QC Batch Method: EPA 3510
Associated Lab Samples: 92269187001

Analysis Method: EPA 8081
Analysis Description: 8081 GCS TCLP Pesticides

METHOD BLANK: 1575095
Associated Lab Samples: 92269187001

Matrix: Water

Parameter	Units	Blank Result	Reporting Limit	Analyzed	Qualifiers
Chlordane (Technical)	ug/L	ND	3.0	10/06/15 21:06	
Endrin	ug/L	ND	0.50	10/06/15 21:06	
gamma-BHC (Lindane)	ug/L	ND	0.50	10/06/15 21:06	
Heptachlor epoxide	ug/L	ND	0.50	10/06/15 21:06	
Methoxychlor	ug/L	ND	1000	10/06/15 21:06	
Toxaphene	ug/L	ND	3.0	10/06/15 21:06	
Decachlorobiphenyl (S)	%	71	10-138	10/06/15 21:06	
Tetrachloro-m-xylene (S)	%	93	10-110	10/06/15 21:06	

LABORATORY CONTROL SAMPLE & LCSD: 1575096 1575097

Parameter	Units	Spike Conc.	LCS Result	LCSD Result	LCS % Rec	LCSD % Rec	% Rec Limits	RPD	Max RPD	Qualifiers
Endrin	ug/L	1.2	1.2	1.2	98	97	20-134	0	30	
gamma-BHC (Lindane)	ug/L	1.2	1.1	1.2	92	97	20-118	5	30	
Heptachlor epoxide	ug/L	1.2	1.1	1.1	93	93	22-133	0	30	
Methoxychlor	ug/L	3.7	ND	ND	93	90	44-150		30	
Decachlorobiphenyl (S)	%				69	77	10-138			
Tetrachloro-m-xylene (S)	%				91	96	10-110			

Results presented on this page are in the units indicated by the "Units" column except where an alternate unit is presented to the right of the result.

This report shall not be reproduced, except in full,
without the written consent of Pace Analytical Services, Inc..

Pace Analytical Services, Inc.
9800 Kincey Ave. Suite 100
Huntersville, NC 28078
(704)875-9092

QUALITY CONTROL DATA

Project: SLUDGE TESTING
Pace Project No.: 92269187

QC Batch: OEXT/24609
QC Batch Method: EPA 3510
Analysis Method: EPA 8151
Analysis Description: 8151 GCS Herbicides TCLP
Associated Lab Samples: 92269187001

METHOD BLANK: 1350433 Matrix: Water
Associated Lab Samples: 92269187001

Parameter	Units	Blank Result	Reporting Limit	Analyzed	Qualifiers
2,4,5-TP (Silvex)	mg/L	ND	0.00019	10/07/15 15:06	
2,4-D	mg/L	ND	0.00094	10/07/15 15:06	
2,4-DCAA (S)	%	89	42-142	10/07/15 15:06	

METHOD BLANK: 1352964 Matrix: Water
Associated Lab Samples: 92269187001

Parameter	Units	Blank Result	Reporting Limit	Analyzed	Qualifiers
2,4,5-TP (Silvex)	mg/L	ND	0.00019	10/07/15 16:36	
2,4-D	mg/L	ND	0.00094	10/07/15 16:36	
2,4-DCAA (S)	%	90	42-142	10/07/15 16:36	

LABORATORY CONTROL SAMPLE: 1350434

Parameter	Units	Spike Conc.	LCS Result	LCS % Rec	% Rec Limits	Qualifiers
2,4,5-TP (Silvex)	mg/L	.012	0.012	102	27-170	
2,4-D	mg/L	.06	0.054	91	23-163	
2,4-DCAA (S)	%			95	42-142	

MATRIX SPIKE & MATRIX SPIKE DUPLICATE: 1352965 1352966

Parameter	Units	40121772002 Result	MS Spike Conc.	MSD Spike Conc.	MS Result	MSD Result	MS % Rec	MSD % Rec	% Rec Limits	RPD	Qual
2,4,5-TP (Silvex)	mg/L	ND	.0296	.0296	0.033	0.030	111	103	27-170	8	
2,4-D	mg/L	ND	.148	.148	0.14	0.13	94	90	23-163	5	
2,4-DCAA (S)	%						97	94	42-142		

Results presented on this page are in the units indicated by the "Units" column except where an alternate unit is presented to the right of the result.

REPORT OF LABORATORY ANALYSIS

This report shall not be reproduced, except in full,
without the written consent of Pace Analytical Services, Inc..

Pace Analytical Services, Inc.
9800 Kincey Ave. Suite 100
Huntersville, NC 28078
(704)875-9092

QUALITY CONTROL DATA

Project: SLUDGE TESTING
Pace Project No.: 92269187

QC Batch: OEXT/38185
QC Batch Method: EPA 3510
Analysis Method: EPA 8270
Analysis Description: 8270 TCLP MSSV
Associated Lab Samples: 92269187001

METHOD BLANK: 1575091
Matrix: Water
Associated Lab Samples: 92269187001

Parameter	Units	Blank Result	Reporting Limit	Analyzed	Qualifiers
1,4-Dichlorobenzene	ug/L	ND	50.0	10/06/15 20:26	
2,4,5-Trichlorophenol	ug/L	ND	50.0	10/06/15 20:26	
2,4,6-Trichlorophenol	ug/L	ND	50.0	10/06/15 20:26	
2,4-Dinitrotoluene	ug/L	ND	50.0	10/06/15 20:26	
2-Methylphenol(o-Cresol)	ug/L	ND	50.0	10/06/15 20:26	
3&4-Methylphenol(m&p Cresol)	ug/L	ND	50.0	10/06/15 20:26	
Hexachloro-1,3-butadiene	ug/L	ND	50.0	10/06/15 20:26	
Hexachlorobenzene	ug/L	ND	50.0	10/06/15 20:26	
Hexachloroethane	ug/L	ND	50.0	10/06/15 20:26	
Nitrobenzene	ug/L	ND	50.0	10/06/15 20:26	
Pentachlorophenol	ug/L	ND	100	10/06/15 20:26	
Pyridine	ug/L	ND	50.0	10/06/15 20:26	
2,4,6-Tribromophenol (S)	%	83	27-108	10/06/15 20:26	
2-Fluorobiphenyl (S)	%	84	13-107	10/06/15 20:26	
2-Fluorophenol (S)	%	49	10-110	10/06/15 20:26	
Nitrobenzene-d5 (S)	%	58	12-102	10/06/15 20:26	
Phenol-d6 (S)	%	34	10-110	10/06/15 20:26	
Terphenyl-d14 (S)	%	97	21-132	10/06/15 20:26	

LABORATORY CONTROL SAMPLE: 1575092

Parameter	Units	Spike Conc.	LCS Result	LCS % Rec	% Rec Limits	Qualifiers
1,4-Dichlorobenzene	ug/L	500	362	72	10-110	
2,4,5-Trichlorophenol	ug/L	500	462	92	39-108	
2,4,6-Trichlorophenol	ug/L	500	401	80	40-104	
2,4-Dinitrotoluene	ug/L	500	470	94	42-109	
2-Methylphenol(o-Cresol)	ug/L	500	335	67	31-110	
3&4-Methylphenol(m&p Cresol)	ug/L	500	288	58	30-110	
Hexachloro-1,3-butadiene	ug/L	500	403	81	10-110	
Hexachlorobenzene	ug/L	500	519	104	39-121	
Hexachloroethane	ug/L	500	329	66	10-110	
Nitrobenzene	ug/L	500	362	72	32-101	
Pentachlorophenol	ug/L	1000	718	72	18-108	
Pyridine	ug/L	500	208	42	10-110	
2,4,6-Tribromophenol (S)	%			102	27-108	
2-Fluorobiphenyl (S)	%			90	13-107	
2-Fluorophenol (S)	%			52	10-110	
Nitrobenzene-d5 (S)	%			74	12-102	
Phenol-d6 (S)	%			41	10-110	
Terphenyl-d14 (S)	%			94	21-132	

Results presented on this page are in the units indicated by the "Units" column except where an alternate unit is presented to the right of the result.

REPORT OF LABORATORY ANALYSIS

This report shall not be reproduced, except in full,
without the written consent of Pace Analytical Services, Inc..

Pace Analytical Services, Inc.
9800 Kincey Ave. Suite 100
Huntersville, NC 28078
(704)875-9092

QUALITY CONTROL DATA

Project: SLUDGE TESTING
Pace Project No.: 92269187

MATRIX SPIKE & MATRIX SPIKE DUPLICATE: 1575093 1575094

Parameter	Units	92270070001 Result	MS Spike Conc.	MSD Spike Conc.	MS Result	MSD Result	MS % Rec	MSD % Rec	% Rec Limits	RPD	Qual
1,4-Dichlorobenzene	ug/L	ND	500	500	377	353	75	71	30-150	7	
2,4,5-Trichlorophenol	ug/L	ND	500	500	459	477	92	95	30-150	4	
2,4,6-Trichlorophenol	ug/L	ND	500	500	394	426	79	85	30-150	8	
2,4-Dinitrotoluene	ug/L	ND	500	500	396	425	79	85	30-150	7	
2-Methylphenol(o-Cresol)	ug/L	ND	500	500	376	401	75	80	30-150	6	
3&4-Methylphenol(m&p Cresol)	ug/L	ND	500	500	339	347	68	69	30-150	2	
Hexachloro-1,3-butadiene	ug/L	ND	500	500	407	380	81	76	30-150	7	
Hexachlorobenzene	ug/L	ND	500	500	522	494	104	99	30-150	6	
Hexachloroethane	ug/L	ND	500	500	345	336	69	67	30-150	3	
Nitrobenzene	ug/L	ND	500	500	357	335	71	67	30-150	6	
Pentachlorophenol	ug/L	ND	1000	1000	823	895	82	90	30-150	8	
Pyridine	ug/L	ND	500	500	166	246	33	49	30-150	39	R1
2,4,6-Tribromophenol (S)	%						106	111	27-108		S0
2-Fluorobiphenyl (S)	%						82	80	13-107		
2-Fluorophenol (S)	%						56	59	10-110		
Nitrobenzene-d5 (S)	%						73	74	12-102		
Phenol-d6 (S)	%						43	50	10-110		
Terphenyl-d14 (S)	%						86	89	21-132		

Results presented on this page are in the units indicated by the "Units" column except where an alternate unit is presented to the right of the result.

This report shall not be reproduced, except in full,
without the written consent of Pace Analytical Services, Inc..

Pace Analytical Services, Inc.
9800 Kincey Ave. Suite 100
Huntersville, NC 28078
(704)875-9092

QUALITY CONTROL DATA

Project: SLUDGE TESTING
Pace Project No.: 92269187

QC Batch: PMST/8415
QC Batch Method: ASTM D2974-87
Associated Lab Samples: 92269187001

Analysis Method: ASTM D2974-87
Analysis Description: Dry Weight/Percent Moisture

SAMPLE DUPLICATE: 1569698

Parameter	Units	92269105001 Result	Dup Result	RPD	Qualifiers
Percent Moisture	%	56.2	54.8	3	

SAMPLE DUPLICATE: 1569699

Parameter	Units	92269604001 Result	Dup Result	RPD	Qualifiers
Percent Moisture	%	27.8	27.4	2	

Results presented on this page are in the units indicated by the "Units" column except where an alternate unit is presented to the right of the result.

This report shall not be reproduced, except in full,
without the written consent of Pace Analytical Services, Inc..

Pace Analytical Services, Inc.
9800 Kincey Ave. Suite 100
Huntersville, NC 28078
(704)875-9092

QUALITY CONTROL DATA

Project: SLUDGE TESTING
Pace Project No.: 92269187

QC Batch: WET/40607
QC Batch Method: EPA 9095
Analysis Method: EPA 9095
Analysis Description: 9095 PAINT FILTER LIQUID TEST
Associated Lab Samples: 92269187001

SAMPLE DUPLICATE: 1574262

Parameter	Units	92269187001 Result	Dup Result	RPD	Qualifiers
Free Liquids		PASS	PASS		

Results presented on this page are in the units indicated by the "Units" column except where an alternate unit is presented to the right of the result.

This report shall not be reproduced, except in full,
without the written consent of Pace Analytical Services, Inc..

Pace Analytical Services, Inc.
9800 Kincey Ave. Suite 100
Huntersville, NC 28078
(704)875-9092

QUALIFIERS

Project: SLUDGE TESTING
Pace Project No.: 92269187

DEFINITIONS

DF - Dilution Factor, if reported, represents the factor applied to the reported data due to dilution of the sample aliquot.

ND - Not Detected at or above adjusted reporting limit.

J - Estimated concentration above the adjusted method detection limit and below the adjusted reporting limit.

MDL - Adjusted Method Detection Limit.

PQL - Practical Quantitation Limit.

RL - Reporting Limit.

S - Surrogate

1,2-Diphenylhydrazine decomposes to and cannot be separated from Azobenzene using Method 8270. The result for each analyte is a combined concentration.

Consistent with EPA guidelines, unrounded data are displayed and have been used to calculate % recovery and RPD values.

LCS(D) - Laboratory Control Sample (Duplicate)

MS(D) - Matrix Spike (Duplicate)

DUP - Sample Duplicate

RPD - Relative Percent Difference

NC - Not Calculable.

SG - Silica Gel - Clean-Up

U - Indicates the compound was analyzed for, but not detected.

Acid preservation may not be appropriate for 2 Chloroethylvinyl ether, Styrene, and Vinyl chloride.

A separate vial preserved to a pH of 4-5 is recommended in SW846 Chapter 4 for the analysis of Acrolein and Acrylonitrile by EPA Method 8260.

N-Nitrosodiphenylamine decomposes and cannot be separated from Diphenylamine using Method 8270. The result reported for each analyte is a combined concentration.

Pace Analytical is TNI accredited. Contact your Pace PM for the current list of accredited analytes.

TNI - The NELAC Institute.

LABORATORIES

PASI-A	Pace Analytical Services - Asheville
PASI-C	Pace Analytical Services - Charlotte
PASI-O	Pace Analytical Services - Ormond Beach

ANALYTE QUALIFIERS

1g	8260 results are from a total analysis which show that analytes are not present or that they are present but at such low levels that the appropriate regulatory levels could not possibly be exceeded, per Section 1.2 of Method 1311.
R1	RPD value was outside control limits.
S0	Surrogate recovery outside laboratory control limits.

This report shall not be reproduced, except in full,
without the written consent of Pace Analytical Services, Inc..

Pace Analytical Services, Inc.
9800 Kincey Ave. Suite 100
Huntersville, NC 28078
(704)875-9092

QUALITY CONTROL DATA CROSS REFERENCE TABLE

Project: SLUDGE TESTING
Pace Project No.: 92269187

Lab ID	Sample ID	QC Batch Method	QC Batch	Analytical Method	Analytical Batch
92269187001	**BFP CAKE**	EPA 3510	OEXT/38186	EPA 8081	GCSV/22823
92269187001	**BFP CAKE**	EPA 3510	OEXT/24609	EPA 8151	GCSV/16017
92269187001	**BFP CAKE**	EPA 3010	MPRP/19670	EPA 6010	ICP/17710
92269187001	**BFP CAKE**	EPA 7470	MERP/8432	EPA 7470	MERC/8099
92269187001	**BFP CAKE**	EPA 3510	OEXT/38185	EPA 8270	MSSV/11341
92269187001	**BFP CAKE**	EPA 8260	MSV/33619		
92269187001	**BFP CAKE**	SM 2540G	OEXT/38072		
92269187001	**BFP CAKE**	ASTM D2974-87	PMST/8415		
92269187001	**BFP CAKE**	EPA 9095	WET/40607		

This report shall not be reproduced, except in full,
without the written consent of Pace Analytical Services, Inc..

Pace Analytical®
www.pacelabs.com

CHAIN-OF-CUSTODY / Analytical Request Document

The Chain-of-Custody is a LEGAL DOCUMENT. All relevant fields must be completed accurately.

Page: of

1941364

Section A
Required Client Information:

Company: Town of Orange WWTP
Address: 13222 Spicers Mill Rd
Orange, VA 22960
Email To: ams@townoforangeva.org
Phone: 540-672-3112 Fax: 540-672-6490
Requested Due Date/TAT:

Section B
Required Project Information:

Report To: Michelle Steinberger
Copy To:
Purchase Order No.:
Project Name:
Project Number:

Section C
Invoice Information:

Attention: Sheena Payette
Company Name: Town of Orange
Address: 119 Belleview Ave.
Pace Quote Reference:
Pace Project Manager:
Pace Profile #:

REGULATORY AGENCY

☑ NPDES ☐ GROUND WATER ☐ DRINKING WATER
☐ UST ☐ RCRA ☐ OTHER _____

Site Location STATE: VA

Section D
Required Client Information

SAMPLE ID
(A-Z, 0-9 / ,-)
Sample IDs MUST BE UNIQUE

Matrix Codes
MATRIX / CODE

Drinking Water	DW
Water	WT
Waste Water	WW
Product	P
Soil/Solid	SL
Oil	OL
Wipe	WP
Air	AR
Tissue	TS
Other	OT

Requested Analysis Filtered (Y/N)

ITEM #	SAMPLE ID	MATRIX CODE (see valid codes to left)	SAMPLE TYPE (G=GRAB C=COMP)	COLLECTED COMPOSITE START DATE	COLLECTED COMPOSITE START TIME	COLLECTED COMPOSITE END/GRAB DATE	COLLECTED COMPOSITE END/GRAB TIME	SAMPLE TEMP AT COLLECTION	# OF CONTAINERS	Unpreserved	H_2SO_4	HNO_3	HCl	NaOH	$Na_2S_2O_3$	Methanol	Other	Analysis Test (Y/N)	Full TCLP	% Solids	Paint Filter	Residual Chlorine (Y/N)	Pace Project No./ Lab I.D.
1	~~Full TCLP / Paint Filter / % Solids~~	SL	G			9/23/15	0800	2.0	5	X									X	X	X		92269187
2	BFP Cake ↑																						
3																							
4																							
5																							
6																							
7																							
8																							
9																							
10																							
11																							
12																							

ADDITIONAL COMMENTS	RELINQUISHED BY / AFFILIATION	DATE	TIME	ACCEPTED BY / AFFILIATION	DATE	TIME	SAMPLE CONDITIONS			
	[signature]	9/23/15	0817	Denise Pierce Edm	9/24/15	0935	2.3	Y	N	Y
							Temp in °C	Received on Ice (Y/N)	Custody Sealed Cooler (Y/N)	Samples Intact (Y/N)

ORIGINAL

SAMPLER NAME AND SIGNATURE

PRINT Name of SAMPLER: Jesse Redmon
SIGNATURE of SAMPLER: [signature]
DATE Signed (MM/DD/YY): 09/23/15

*Important Note: By signing this form you are accepting Pace's NET 30 day payment terms and agreeing to late charges of 1.5% per month for any invoices not paid within 30 days.

F-ALL-Q-020rev.07, 15-May-2007

Pace Analytical®
www.pacelabs.com

CHAIN-OF-CUSTODY / Analytical Request Document

The Chain-of-Custody is a LEGAL DOCUMENT. All relevant fields must be completed accurately.

Page: of

1941364

Section A
Required Client Information:

Company: Town of Orange WWTP
Address: 13222 Spicer's Mill Rd
Orange, VA 22960
Email To: ams@townoforangeva.org
Phone: 540-672-3112 Fax: 540-672-6490
Requested Due Date/TAT:

Section B
Required Project Information:

Report To: Michelle Steinberger
Copy To:
Purchase Order No.:
Project Name:
Project Number:

Section C
Invoice Information:

Attention: Sheena Payette
Company Name: Town of Orange
Address: 119 Belleview Ave.
Pace Quote Reference:
Pace Project Manager:
Pace Profile #:

REGULATORY AGENCY

☑ NPDES ☐ GROUND WATER ☐ DRINKING WATER
☐ UST ☐ RCRA ☐ OTHER

Site Location STATE: VA

Section D
Required Client Information

SAMPLE ID
(A-Z, 0-9 / ,-)
Sample IDs MUST BE UNIQUE

Matrix Codes
MATRIX / CODE

Drinking Water	DW
Water	WT
Waste Water	WW
Product	P
Soil/Solid	SL
Oil	OL
Wipe	WP
Air	AR
Tissue	TS
Other	OT

Requested Analysis Filtered (Y/N)

ITEM #	SAMPLE ID	MATRIX CODE (see valid codes to left)	SAMPLE TYPE (G=GRAB C=COMP)	COLLECTED COMPOSITE START DATE	COLLECTED COMPOSITE START TIME	COLLECTED COMPOSITE END/GRAB DATE	COLLECTED COMPOSITE END/GRAB TIME	SAMPLE TEMP AT COLLECTION	# OF CONTAINERS	Unpreserved	H_2SO_4	HNO_3	HCl	NaOH	$Na_2S_2O_3$	Methanol	Other	Analysis Test (Y/N) Full TCLP	% Solids	Paint Filter	Residual Chlorine (Y/N)	Pace Project No./ Lab I.D.
1	~~Full TCLP / Paint Filter / % Solids~~	SL	G			9/23/15	0800	21.0	5	X								X	X	X		92769187
2	BFP Cake																					
3																						
4																						
5																						
6																						
7																						
8																						
9																						
10																						
11																						
12																						

ADDITIONAL COMMENTS	RELINQUISHED BY / AFFILIATION	DATE	TIME	ACCEPTED BY / AFFILIATION	DATE	TIME	SAMPLE CONDITIONS			
	Tom Kim	9/23/15	0817	Denise Pierce Ellen	9/24/15	0935	2.3	Y	N	Y

2

SAMPLER NAME AND SIGNATURE

PRINT Name of SAMPLER: Jesse Redmon
SIGNATURE of SAMPLER: Tom Kim
DATE Signed (MM/DD/YY): 09/23/15

Temp in °C | Received on Ice (Y/N) | Custody Sealed Cooler (Y/N) | Samples Intact (Y/N)

*Important Note: By signing this form you are accepting Pace's NET 30 day payment terms and agreeing to late charges of 1.5% per month for any invoices not paid within 30 days.

F-ALL-Q-020rev.07, 15-May-2007

Pace Analytical®
www.pacelabs.com

CHAIN-OF-CUSTODY / Analytical Request Document

The Chain-of-Custody is a LEGAL DOCUMENT. All relevant fields must be completed accurately.

Page: of

1941364

Section A
Required Client Information:

Company: Town of Orange WWTP
Address: 13222 Spotts Mill Rd
Orange, VA 22960
Email To: ams@townoforangeva.org
Phone: 540-672-3112 Fax: 540-672-6190
Requested Due Date/TAT:

Section B
Required Project Information:

Report To: Michelle Shoberger
Copy To:
Purchase Order No.:
Project Name:
Project Number:

Section C
Invoice Information:

Attention: Sheena Poyerde
Company Name: Town of Orange
Address: 119 Belleview Ave.
Pace Quote Reference:
Pace Project Manager:
Pace Profile #:

REGULATORY AGENCY

☑ NPDES ☐ GROUND WATER ☐ DRINKING WATER
☐ UST ☐ RCRA ☐ OTHER _____

Site Location STATE: VA

Section D
Required Client Information

SAMPLE ID
(A-Z, 0-9 / ,-)
Sample IDs MUST BE UNIQUE

Matrix Codes
MATRIX / CODE

Drinking Water	DW
Water	WT
Waste Water	WW
Product	P
Soil/Solid	SL
Oil	OL
Wipe	WP
Air	AR
Tissue	TS
Other	OT

Requested Analysis Filtered (Y/N)

ITEM #	SAMPLE ID	MATRIX CODE (see valid codes to left)	SAMPLE TYPE (G=GRAB C=COMP)	COLLECTED COMPOSITE START DATE	COLLECTED COMPOSITE START TIME	COLLECTED COMPOSITE END/GRAB DATE	COLLECTED COMPOSITE END/GRAB TIME	SAMPLE TEMP AT COLLECTION	# OF CONTAINERS	Unpreserved	H_2SO_4	HNO_3	HCl	NaOH	$Na_2S_2O_3$	Methanol	Other	Analysis Test (Y/N) Full TCLP	Analysis Test (Y/N) % Solids	Analysis Test (Y/N) Pour Filter	Residual Chlorine (Y/N)	Pace Project No./ Lab I.D.
1	~~Full TCLP Pour Filter~~	SL	G			9/23/15	0700	2.0	5	X								X	X	X		92769187
2	BFP Cake																					
3																						
4																						
5																						
6																						
7																						
8																						
9																						
10																						
11																						
12																						

ADDITIONAL COMMENTS	RELINQUISHED BY / AFFILIATION	DATE	TIME	ACCEPTED BY / AFFILIATION	DATE	TIME	SAMPLE CONDITIONS			
	[signature]	9/23/15	1517	Denise Pierce Lam	9/24/15	0935	2.3	Y	N	Y

Temp in °C | Received on Ice (Y/N) | Custody Sealed Cooler (Y/N) | Samples Intact (Y/N)

SAMPLER NAME AND SIGNATURE

PRINT Name of SAMPLER: Jesse Redmon
SIGNATURE of SAMPLER: [signature] DATE Signed (MM/DD/YY): 9/23/15

3

*Important Note: By signing this form you are accepting Pace's NET 30 day payment terms and agreeing to late charges of 1.5% per month for any invoices not paid within 30 days.

F-ALL-Q-020rev.07, 15-May-2007

Pace Analytical® www.pacelabs.com	Document Name: **Sample Condition Upon Receipt (SCUR)**	Document Revised: May 15, 2015 Page 1 of 2*
	Document No.: F-EDN-CS-003-rev.11	Issuing Authorities: Pace Eden Quality Office

*Page 2 of 2 is for Internal Use Only

Client Name: Town of Orange WWTP

Courier (circle): (Fed Ex) UPS USPS Client Commercial Pace Other_____

Custody Seal on Cooler/Box Present: ☐ yes ☑ no Seals intact: ☐ yes ☐ no

Packing Material: ☐ Bubble Wrap ☐ Bubble Bags ☑ None ☐ Other_____

Thermometer Used: IR Gun ED007 **Type of Ice:** (Wet) Blue None ☐ Samples on ice, cooling process has begun

Temp Correction Factor: Add / Subtract 0 C

Corrected Cooler Temp.: 2.3 C **Biological Tissue is Frozen:** Yes No N/A

Temp should be above freezing to 6°C

Date and Initials of person examining contents / preservation check: 9/24/15 [illegible]

		Comments:
Chain of Custody Present:	☑Yes ☐No ☐N/A	1.
Chain of Custody Filled Out:	☑Yes ☐No ☐N/A	2.
Chain of Custody Relinquished:	☑Yes ☐No ☐N/A	3.
Sampler Name & Signature on COC:	☑Yes ☐No ☐N/A	4.
Samples Arrived within Hold Time:	☑Yes ☐No ☐N/A	5.
Short Hold Time Analysis (<72hr):	☐Yes ☑No ☐N/A	6.
Rush Turn Around Time Requested:	☐Yes ☑No ☐N/A	7.
Sufficient Volume:	☑Yes ☐No ☐N/A	8.
Correct Containers Used:	☑Yes ☐No ☐N/A	9.
-Pace Containers Used:	☑Yes ☐No ☐N/A	
Containers Intact:	☑Yes ☐No ☐N/A	10.
Filtered volume received for Dissolved tests	☐Yes ☐No ☑N/A	11.
Sample Labels match COC:	☑Yes ☐No ☐N/A	12.
-Includes date/time/ID/Analysis Matrix: SL		
All containers needing preservation have been checked.	☐Yes ☐No ☑N/A	13.
All containers needing preservation are found to be in compliance with EPA recommendation.	☐Yes ☐No ☑N/A	
exceptions: VOA, coliform, TOC, O&G, WI-DRO (water)	☐Yes ☐No	
Samples checked for dechlorination:	☐Yes ☐No ☑N/A	14.
Headspace in VOA Vials (>6mm):	☐Yes ☐No ☑N/A	15.
Trip Blank Present:	☐Yes ☐No ☑N/A	16.
Trip Blank Custody Seals Present	☐Yes ☐No ☑N/A	
Pace Trip Blank Lot # (if purchased):		

Client Notification/ Resolution: Field Data Required? Y / N

Person Contacted: _____ Date/Time: _____

Comments/ Resolution: _____

SCURF / SRF Review: BLA **Date:** 9/24/15

WO# 92269187

92269187

Note: Whenever there is a discrepancy affecting North Carolina compliance samples, a copy of this form will be sent to the North Carolina DEHNR Certification Office (i.e out of hold, incorrect preservative, out of temp, incorrect containers)

Chain of Custody

Pace Analytical®
www.pacelabs.com

Workorder: 92269187 **Workorder Name:** SLUDGE TESTING **Owner Received Date:** 9/24/2015 **Results Requested By:** 10/8/2015

Report To

Brittany Gibson
Pace Analytical Services, Inc.
9800 Kincey Ave., Suite 100
Huntersville, NC 28078
Phone (704)875-9092
Fax (704)875-9091

Subcontract To

Pace Analytical Ormond Beach
8 East Tower Circle
Ormond Beach, FL 32174
Phone (386)672-5668

Requested Analysis

Item	Sample ID	Sample Type	Collect Date/Time	Lab ID	Matrix	Preserved Containers: Unpreserved	XTCLP Herbicides	LAB USE ONLY
1	BFP CAKE	PS	9/23/2015 08:00	92269187001	Solid	1		
2								
3								
4								
5								

Transfers	Released By	Date/Time	Received By	Date/Time
1				
2				
3				

Comments

Cooler Temperature on Receipt ____ °C **Custody Seal** Y or N **Received on Ice** Y or N **Samples Intact** Y or N

****In order to maintain client confidentiality, location/name of the sampling site, sampler's name and signature may not be provided on this COC document. This chain of custody is considered complete as is since this information is available in the owner laboratory.*

Pace Analytical®
www.pacelabs.com

Ship To:
Pace Analytical Ormond Beach
8 East Tower Circle
Ormond Beach, FL 32174
Phone (386)672-5668

INTER_LABORATORY WORK ORDER # 92269187
(To be completed by sending lab)

Sending Project No:	92269187
Receiving Project No:	
Check Box for Consolidated Invoice:	☐
Date Prepared:	09/24/15
REQUESTED COMPLETION DATE:	**10/8/2015**

Sending Region	IR92-Charlotte	Sending Project Mgr.	Brittany Gibson
Receiving Region	IR35-Ormond Beach	External Client	Town of Orange WWTP
State of Sample Origin	VA	QC Deliverable	STD REPORT

All questions should be addressed to sending project manager.

Requested Reportable Units _____ Report Wet or Dry Weight? Dry Weight Cert. Needed _____

WORK REQUESTED

Method Description	Container Type	Quantity of containers	Preservative	Quantity of Samples	Unit Price	Amount
TCLP Herbicides	BP1U		Unpreserved	1	$145.00	$145.00
					TOTAL	$145.00

Special Requirements: _____

Receiving Region Department	Acctg. Code	Totals from above	Revenue Allocation	
			Receiving Region (80%)	Client Services Dept. Sending Region (20%)
GC Semivolatiles	31	$145.00	$116.00	$29.00
* Custom Revenue Allocation	**TOTAL**	$145.00	$116.00	$29.00

FOR ANALYTICAL WORK COMPLETED THIS SECTION ALSO

Chain of Custody Included: ☐ Yes ☐ No Return Samples to Sending Region: ☐ Yes ☐ No

Matrix: ☐ Soil ☐ Water ☐ Air ☐ Other (identify) _____

CONFIRMATION OF WORK COMPLETED

Date Completed: _____ Receiving Project Manager: _____

DISPOSITION of FORM

Original sent to the receiving lab - Copy kept at the sending lab.
When work completed: Original sent to the ABM at the receiving laboratory. Copies are made to corporate as needed.

Pace Analytical Services, Inc.
9800 Kincey Ave. Suite 100
Huntersville, NC 28078
(704)875-9092

February 16, 2015

Michelle Stienburger
Town of Orange WWTP
13222 Spicers Mill Rd
Orange, VA 22960

RE: Project: TOWN OF ORANGE WWTP
Pace Project No.: 92235211

Dear Michelle Stienburger:
Enclosed are the analytical results for sample(s) received by the laboratory on January 28, 2015. The results relate only to the samples included in this report. Results reported herein conform to the most current TNI standards and the laboratory's Quality Assurance Manual, where applicable, unless otherwise noted in the body of the report.

Analyses were performed at the Pace Analytical Services location indicated on the sample analyte page for analysis unless otherwise footnoted.

If you have any questions concerning this report, please feel free to contact me.

Sincerely,

Brittany L. Gibson

Brittany Gibson for
Terri Page
terri.page@pacelabs.com
Project Manager

Enclosures

This report shall not be reproduced, except in full,
without the written consent of Pace Analytical Services, Inc..

Pace Analytical Services, Inc.
9800 Kincey Ave. Suite 100
Huntersville, NC 28078
(704)875-9092

CERTIFICATIONS

Project: TOWN OF ORANGE WWTP
Pace Project No.: 92235211

Ormond Beach Certification IDs
8 East Tower Circle, Ormond Beach, FL 32174
Alabama Certification #: 41320
Arizona Certification #: AZ0735
Connecticut Certification #: PH-0216
Delaware Certification: FL NELAC Reciprocity
Florida Certification #: E83079
Georgia Certification #: 955
Guam Certification: FL NELAC Reciprocity
Hawaii Certification: FL NELAC Reciprocity
Illinois Certification #: 200068
Indiana Certification: FL NELAC Reciprocity
Kansas Certification #: E-10383
Kentucky Certification #: 90050
Louisiana Certification #: FL NELAC Reciprocity
Louisiana Environmental Certificate #: 05007
Maryland Certification: #346
Massachusetts Certification #: M-FL1264
Michigan Certification #: 9911
Mississippi Certification: FL NELAC Reciprocity
Missouri Certification #: 236
Montana Certification #: Cert 0074
Nebraska Certification: NE-OS-28-14
Nevada Certification: FL NELAC Reciprocity
New Hampshire Certification #: 2958
New Jersey Certification #: FL765
New York Certification #: 11608
North Carolina Environmental Certificate #: 667
Pennsylvania Certification #: 68-00547
Puerto Rico Certification #: FL01264
South Carolina Certification: #96042001
Tennessee Certification #: TN02974
Texas Certification: FL NELAC Reciprocity
US Virgin Islands Certification: FL NELAC Reciprocity
Virginia Environmental Certification #: 460165
Washington Certification #: C955
West Virginia Certification #: 9962C
Wisconsin Certification #: 399079670
Wyoming (EPA Region 8): FL NELAC Reciprocity

Charlotte Certification IDs
9800 Kincey Ave. Ste 100, Huntersville, NC 28078
North Carolina Drinking Water Certification #: 37706
North Carolina Field Services Certification #: 5342
North Carolina Wastewater Certification #: 12
South Carolina Certification #: 99006001
Florida/NELAP Certification #: E87627
Kentucky UST Certification #: 84
West Virginia Certification #: 357
Virginia/VELAP Certification #: 460221

Asheville Certification IDs
2225 Riverside Drive, Asheville, NC 28804
Florida/NELAP Certification #: E87648
Massachusetts Certification #: M-NC030
North Carolina Drinking Water Certification #: 37712
North Carolina Wastewater Certification #: 40
South Carolina Certification #: 99030001
West Virginia Certification #: 356
Virginia/VELAP Certification #: 460222

This report shall not be reproduced, except in full,
without the written consent of Pace Analytical Services, Inc..

Pace Analytical Services, Inc.
9800 Kincey Ave. Suite 100
Huntersville, NC 28078
(704)875-9092

SAMPLE ANALYTE COUNT

Project: TOWN OF ORANGE WWTP
Pace Project No.: 92235211

Lab ID	Sample ID	Method	Analysts	Analytes Reported	Laboratory
92235211001	**FULL TCLP**	EPA 8081	RES	8	PASI-C
		EPA 8151	LJM	3	PASI-O
		EPA 6010	JMW	7	PASI-A
		EPA 7470	HVK	1	PASI-A
		EPA 8270	BPJ	18	PASI-C
		EPA 8260	DLK	14	PASI-C
92235211002	**PAINT FILTER & % SOLIDS**	EPA 9095	MLS	1	PASI-A

This report shall not be reproduced, except in full,
without the written consent of Pace Analytical Services, Inc..

Pace Analytical Services, Inc.
9800 Kincey Ave. Suite 100
Huntersville, NC 28078
(704)875-9092

ANALYTICAL RESULTS

Project: TOWN OF ORANGE WWTP
Pace Project No.: 92235211

Sample: FULL TCLP **Lab ID: 92235211001** Collected: 01/27/15 08:00 Received: 01/28/15 09:55 Matrix: Solid

Results reported on a "dry-weight" basis

Parameters	Results	Units	Report Limit	DF	Prepared	Analyzed	CAS No.	Qual
8081 GCS Pesticides, TCLP	Analytical Method: EPA 8081 Preparation Method: EPA 3510 Leachate Method/Date: EPA 1311; 02/05/15 15:00							
gamma-BHC (Lindane)	ND	ug/L	2.5	5	02/12/15 08:30	02/12/15 15:57	58-89-9	
Chlordane (Technical)	ND	ug/L	15.0	5	02/12/15 08:30	02/12/15 15:57	57-74-9	
Endrin	ND	ug/L	2.5	5	02/12/15 08:30	02/12/15 15:57	72-20-8	
Heptachlor epoxide	ND	ug/L	2.5	5	02/12/15 08:30	02/12/15 15:57	1024-57-3	
Methoxychlor	ND	ug/L	5000	5	02/12/15 08:30	02/12/15 15:57	72-43-5	
Toxaphene	ND	ug/L	15.0	5	02/12/15 08:30	02/12/15 15:57	8001-35-2	
Surrogates								
Decachlorobiphenyl (S)	0	%	10-138	5	02/12/15 08:30	02/12/15 15:57	2051-24-3	D3,S4
Tetrachloro-m-xylene (S)	0	%	10-110	5	02/12/15 08:30	02/12/15 15:57	877-09-8	
8151 Chlorinate Herbicide TCLP	Analytical Method: EPA 8151 Preparation Method: EPA 3510							
2,4-D	ND	mg/L	0.010	1	02/05/15 15:30	02/06/15 17:13	94-75-7	
2,4,5-TP (Silvex)	ND	mg/L	0.010	1	02/05/15 15:30	02/06/15 17:13	93-72-1	
Surrogates								
2,4-DCAA (S)	74	%	42-142	1	02/05/15 15:30	02/06/15 17:13	19719-28-9	
6010 MET ICP, TCLP	Analytical Method: EPA 6010 Preparation Method: EPA 3010 Leachate Method/Date: EPA 1311; 02/05/15 17:15							
Arsenic	ND	mg/L	0.050	1	02/07/15 11:50	02/09/15 14:59	7440-38-2	
Barium	ND	mg/L	0.25	1	02/07/15 11:50	02/09/15 14:59	7440-39-3	
Cadmium	ND	mg/L	0.0050	1	02/07/15 11:50	02/09/15 14:59	7440-43-9	
Chromium	ND	mg/L	0.025	1	02/07/15 11:50	02/09/15 14:59	7440-47-3	
Lead	ND	mg/L	0.025	1	02/07/15 11:50	02/09/15 14:59	7439-92-1	
Selenium	ND	mg/L	0.10	1	02/07/15 11:50	02/09/15 14:59	7782-49-2	
Silver	ND	mg/L	0.025	1	02/07/15 11:50	02/09/15 14:59	7440-22-4	
7470 Mercury, TCLP	Analytical Method: EPA 7470 Preparation Method: EPA 7470 Leachate Method/Date: EPA 1311; 02/05/15 17:15							
Mercury	ND	ug/L	0.20	1	02/07/15 12:50	02/07/15 15:06	7439-97-6	
8270 MSSV TCLP Sep Funnel	Analytical Method: EPA 8270 Preparation Method: EPA 3510 Leachate Method/Date: EPA 1311; 02/05/15 15:00							
1,4-Dichlorobenzene	ND	ug/L	50.0	1	02/10/15 08:30	02/10/15 15:12	106-46-7	
2,4-Dinitrotoluene	ND	ug/L	50.0	1	02/10/15 08:30	02/10/15 15:12	121-14-2	
Hexachloro-1,3-butadiene	ND	ug/L	50.0	1	02/10/15 08:30	02/10/15 15:12	87-68-3	
Hexachlorobenzene	ND	ug/L	50.0	1	02/10/15 08:30	02/10/15 15:12	118-74-1	
Hexachloroethane	ND	ug/L	50.0	1	02/10/15 08:30	02/10/15 15:12	67-72-1	
2-Methylphenol(o-Cresol)	ND	ug/L	50.0	1	02/10/15 08:30	02/10/15 15:12	95-48-7	
3&4-Methylphenol(m&p Cresol)	ND	ug/L	50.0	1	02/10/15 08:30	02/10/15 15:12		
Nitrobenzene	ND	ug/L	50.0	1	02/10/15 08:30	02/10/15 15:12	98-95-3	
Pentachlorophenol	ND	ug/L	100	1	02/10/15 08:30	02/10/15 15:12	87-86-5	
Pyridine	ND	ug/L	50.0	1	02/10/15 08:30	02/10/15 15:12	110-86-1	
2,4,5-Trichlorophenol	ND	ug/L	50.0	1	02/10/15 08:30	02/10/15 15:12	95-95-4	
2,4,6-Trichlorophenol	ND	ug/L	50.0	1	02/10/15 08:30	02/10/15 15:12	88-06-2	

This report shall not be reproduced, except in full,
without the written consent of Pace Analytical Services, Inc..

Pace Analytical®
www.pacelabs.com

Pace Analytical Services, Inc.
9800 Kincey Ave. Suite 100
Huntersville, NC 28078
(704)875-9092

ANALYTICAL RESULTS

Project: TOWN OF ORANGE WWTP
Pace Project No.: 92235211

Sample: FULL TCLP **Lab ID: 92235211001** Collected: 01/27/15 08:00 Received: 01/28/15 09:55 Matrix: Solid
Results reported on a "dry-weight" basis

Parameters	Results	Units	Report Limit	DF	Prepared	Analyzed	CAS No.	Qual
8270 MSSV TCLP Sep Funnel	Analytical Method: EPA 8270 Preparation Method: EPA 3510 Leachate Method/Date: EPA 1311; 02/05/15 15:00							
Surrogates								
Nitrobenzene-d5 (S)	38	%	12-102	1	02/10/15 08:30	02/10/15 15:12	4165-60-0	
2-Fluorobiphenyl (S)	41	%	13-107	1	02/10/15 08:30	02/10/15 15:12	321-60-8	
Terphenyl-d14 (S)	85	%	21-132	1	02/10/15 08:30	02/10/15 15:12	1718-51-0	
Phenol-d6 (S)	14	%	10-110	1	02/10/15 08:30	02/10/15 15:12	13127-88-3	
2-Fluorophenol (S)	21	%	10-110	1	02/10/15 08:30	02/10/15 15:12	367-12-4	
2,4,6-Tribromophenol (S)	64	%	27-108	1	02/10/15 08:30	02/10/15 15:12	118-79-6	
8260 MSV TCLP	Analytical Method: EPA 8260 Leachate Method/Date: EPA 1311; 02/01/15 10:45							
Benzene	ND	ug/L	192	38.5		02/01/15 22:09	71-43-2	
2-Butanone (MEK)	ND	ug/L	385	38.5		02/01/15 22:09	78-93-3	
Carbon tetrachloride	ND	ug/L	192	38.5		02/01/15 22:09	56-23-5	
Chlorobenzene	ND	ug/L	192	38.5		02/01/15 22:09	108-90-7	
Chloroform	ND	ug/L	192	38.5		02/01/15 22:09	67-66-3	
1,4-Dichlorobenzene	ND	ug/L	192	38.5		02/01/15 22:09	106-46-7	
1,2-Dichloroethane	ND	ug/L	192	38.5		02/01/15 22:09	107-06-2	
1,1-Dichloroethene	ND	ug/L	192	38.5		02/01/15 22:09	75-35-4	
Tetrachloroethene	ND	ug/L	192	38.5		02/01/15 22:09	127-18-4	
Trichloroethene	ND	ug/L	192	38.5		02/01/15 22:09	79-01-6	
Vinyl chloride	ND	ug/L	192	38.5		02/01/15 22:09	75-01-4	
Surrogates								
1,2-Dichloroethane-d4 (S)	113	%	70-130	38.5		02/01/15 22:09	17060-07-0	1g
Toluene-d8 (S)	111	%	67-135	38.5		02/01/15 22:09	2037-26-5	
4-Bromofluorobenzene (S)	96	%	70-130	38.5		02/01/15 22:09	460-00-4	

Sample: PAINT FILTER & % SOLIDS **Lab ID: 92235211002** Collected: 01/27/15 08:00 Received: 01/28/15 09:55 Matrix: Solid
Results reported on a "dry-weight" basis

Parameters	Results	Units	Report Limit	DF	Prepared	Analyzed	CAS No.	Qual
9095 Paint Filter Liquid Test	Analytical Method: EPA 9095							
Free Liquids	**PASS**		1.0	1		02/09/15 10:05		

This report shall not be reproduced, except in full,
without the written consent of Pace Analytical Services, Inc..

Pace Analytical Services, Inc.
9800 Kincey Ave. Suite 100
Huntersville, NC 28078
(704)875-9092

QUALITY CONTROL DATA

Project: TOWN OF ORANGE WWTP
Pace Project No.: 92235211

QC Batch: MERP/7560
QC Batch Method: EPA 7470
Analysis Method: EPA 7470
Analysis Description: 7470 Mercury TCLP
Associated Lab Samples: 92235211001

METHOD BLANK: 1386768
Matrix: Water
Associated Lab Samples: 92235211001

Parameter	Units	Blank Result	Reporting Limit	Analyzed	Qualifiers
Mercury	ug/L	ND	0.20	02/07/15 15:01	

LABORATORY CONTROL SAMPLE: 1386769

Parameter	Units	Spike Conc.	LCS Result	LCS % Rec	% Rec Limits	Qualifiers
Mercury	ug/L	2.5	2.6	105	80-120	

MATRIX SPIKE & MATRIX SPIKE DUPLICATE: 1386770 1386771

Parameter	Units	92235194006 Result	MS Spike Conc.	MSD Spike Conc.	MS Result	MSD Result	MS % Rec	MSD % Rec	% Rec Limits	RPD	Qual
Mercury	ug/L	ND	2.5	2.5	2.8	2.8	112	110	75-125	2	

Results presented on this page are in the units indicated by the "Units" column except where an alternate unit is presented to the right of the result.

This report shall not be reproduced, except in full,
without the written consent of Pace Analytical Services, Inc..

Pace Analytical Services, Inc.
9800 Kincey Ave. Suite 100
Huntersville, NC 28078
(704)875-9092

QUALITY CONTROL DATA

Project: TOWN OF ORANGE WWTP
Pace Project No.: 92235211

QC Batch: MPRP/17858
QC Batch Method: EPA 3010
Analysis Method: EPA 6010
Analysis Description: 6010 MET TCLP
Associated Lab Samples: 92235211001

METHOD BLANK: 1386774
Matrix: Water
Associated Lab Samples: 92235211001

Parameter	Units	Blank Result	Reporting Limit	Analyzed	Qualifiers
Arsenic	mg/L	ND	0.050	02/09/15 14:52	
Barium	mg/L	ND	0.25	02/09/15 14:52	
Cadmium	mg/L	ND	0.0050	02/09/15 14:52	
Chromium	mg/L	ND	0.025	02/09/15 14:52	
Lead	mg/L	ND	0.025	02/09/15 14:52	
Selenium	mg/L	ND	0.10	02/09/15 14:52	
Silver	mg/L	ND	0.025	02/09/15 14:52	

LABORATORY CONTROL SAMPLE: 1386775

Parameter	Units	Spike Conc.	LCS Result	LCS % Rec	% Rec Limits	Qualifiers
Arsenic	mg/L	2.5	2.5	102	80-120	
Barium	mg/L	2.5	2.4	98	80-120	
Cadmium	mg/L	2.5	2.6	102	80-120	
Chromium	mg/L	2.5	2.5	100	80-120	
Lead	mg/L	2.5	2.5	99	80-120	
Selenium	mg/L	2.5	2.6	102	80-120	
Silver	mg/L	1.2	1.2	98	80-120	

MATRIX SPIKE & MATRIX SPIKE DUPLICATE: 1386776 1386777

Parameter	Units	92235194006 Result	MS Spike Conc.	MSD Spike Conc.	MS Result	MSD Result	MS % Rec	MSD % Rec	% Rec Limits	RPD	Qual
Arsenic	mg/L	ND	2.5	2.5	2.6	2.6	104	102	75-125	2	
Barium	mg/L	0.84	2.5	2.5	3.2	3.2	96	95	75-125	1	
Cadmium	mg/L	ND	2.5	2.5	2.6	2.6	104	103	75-125	1	
Chromium	mg/L	0.078	2.5	2.5	2.5	2.5	99	98	75-125	1	
Lead	mg/L	ND	2.5	2.5	2.5	2.5	99	98	75-125	1	
Selenium	mg/L	ND	2.5	2.5	2.6	2.6	104	103	75-125	1	
Silver	mg/L	ND	1.2	1.2	1.2	1.2	100	99	75-125	1	

Results presented on this page are in the units indicated by the "Units" column except where an alternate unit is presented to the right of the result.

This report shall not be reproduced, except in full,
without the written consent of Pace Analytical Services, Inc..

Pace Analytical Services, Inc.
9800 Kincey Ave. Suite 100
Huntersville, NC 28078
(704)875-9092

QUALITY CONTROL DATA

Project: TOWN OF ORANGE WWTP
Pace Project No.: 92235211

QC Batch: MSV/30198
QC Batch Method: EPA 8260
Analysis Method: EPA 8260
Analysis Description: 8260 MSV TCLP
Associated Lab Samples: 92235211001

METHOD BLANK: 1382136
Matrix: Water
Associated Lab Samples: 92235211001

Parameter	Units	Blank Result	Reporting Limit	Analyzed	Qualifiers
1,1-Dichloroethene	ug/L	ND	5.0	02/01/15 13:13	
1,2-Dichloroethane	ug/L	ND	5.0	02/01/15 13:13	
1,4-Dichlorobenzene	ug/L	ND	5.0	02/01/15 13:13	
2-Butanone (MEK)	ug/L	ND	10.0	02/01/15 13:13	
Benzene	ug/L	ND	5.0	02/01/15 13:13	
Carbon tetrachloride	ug/L	ND	5.0	02/01/15 13:13	
Chlorobenzene	ug/L	ND	5.0	02/01/15 13:13	
Chloroform	ug/L	ND	5.0	02/01/15 13:13	
Tetrachloroethene	ug/L	ND	5.0	02/01/15 13:13	
Trichloroethene	ug/L	ND	5.0	02/01/15 13:13	
Vinyl chloride	ug/L	ND	5.0	02/01/15 13:13	
1,2-Dichloroethane-d4 (S)	%	99	70-130	02/01/15 13:13	
4-Bromofluorobenzene (S)	%	101	70-130	02/01/15 13:13	
Toluene-d8 (S)	%	108	67-135	02/01/15 13:13	

LABORATORY CONTROL SAMPLE: 1382137

Parameter	Units	Spike Conc.	LCS Result	LCS % Rec	% Rec Limits	Qualifiers
1,1-Dichloroethene	ug/L	50	49.5	99	66-135	
1,2-Dichloroethane	ug/L	50	48.3	97	67-128	
1,4-Dichlorobenzene	ug/L	50	49.4	99	78-130	
2-Butanone (MEK)	ug/L	100	93.2	93	61-144	
Benzene	ug/L	50	52.5	105	80-125	
Carbon tetrachloride	ug/L	50	48.5	97	69-131	
Chlorobenzene	ug/L	50	49.7	99	81-122	
Chloroform	ug/L	50	44.2	88	73-127	
Tetrachloroethene	ug/L	50	46.8	94	78-122	
Trichloroethene	ug/L	50	54.8	110	78-122	
Vinyl chloride	ug/L	50	49.2	98	58-137	
1,2-Dichloroethane-d4 (S)	%			98	70-130	
4-Bromofluorobenzene (S)	%			99	70-130	
Toluene-d8 (S)	%			99	67-135	

Results presented on this page are in the units indicated by the "Units" column except where an alternate unit is presented to the right of the result.

This report shall not be reproduced, except in full,
without the written consent of Pace Analytical Services, Inc..

Pace Analytical Services, Inc.
9800 Kincey Ave. Suite 100
Huntersville, NC 28078
(704)875-9092

QUALITY CONTROL DATA

Project: TOWN OF ORANGE WWTP
Pace Project No.: 92235211

QC Batch: OEXT/32904
QC Batch Method: EPA 3510
Analysis Method: EPA 8081
Analysis Description: 8081 GCS TCLP Pesticides
Associated Lab Samples: 92235211001

METHOD BLANK: 1389875
Matrix: Water
Associated Lab Samples: 92235211001

Parameter	Units	Blank Result	Reporting Limit	Analyzed	Qualifiers
Chlordane (Technical)	ug/L	ND	3.0	02/12/15 16:32	
Endrin	ug/L	ND	0.50	02/12/15 16:32	
gamma-BHC (Lindane)	ug/L	ND	0.50	02/12/15 16:32	
Heptachlor epoxide	ug/L	ND	0.50	02/12/15 16:32	
Methoxychlor	ug/L	ND	1000	02/12/15 16:32	
Toxaphene	ug/L	ND	3.0	02/12/15 16:32	
Decachlorobiphenyl (S)	%	83	10-138	02/12/15 16:32	
Tetrachloro-m-xylene (S)	%	89	10-110	02/12/15 16:32	

LABORATORY CONTROL SAMPLE & LCSD: 1389876 1389877

Parameter	Units	Spike Conc.	LCS Result	LCSD Result	LCS % Rec	LCSD % Rec	% Rec Limits	RPD	Max RPD	Qualifiers
Endrin	ug/L	1.2	1.2	1.4	96	110	20-134	13	30	
gamma-BHC (Lindane)	ug/L	1.2	1.2	1.2	95	101	20-118	6	30	
Heptachlor epoxide	ug/L	1.2	1.0	1.2	84	94	22-133	11	30	
Methoxychlor	ug/L	3.7	ND	ND	83	100	44-150		30	
Decachlorobiphenyl (S)	%				85	90	10-138			
Tetrachloro-m-xylene (S)	%				91	94	10-110			

Results presented on this page are in the units indicated by the "Units" column except where an alternate unit is presented to the right of the result.

This report shall not be reproduced, except in full,
without the written consent of Pace Analytical Services, Inc..

Pace Analytical Services, Inc.
9800 Kincey Ave. Suite 100
Huntersville, NC 28078
(704)875-9092

QUALITY CONTROL DATA

Project: TOWN OF ORANGE WWTP
Pace Project No.: 92235211

QC Batch: OEXT/20751
QC Batch Method: EPA 3510
Associated Lab Samples: 92235211001

Analysis Method: EPA 8151
Analysis Description: 8151 GCS Herbicides TCLP

METHOD BLANK: 1121836
Associated Lab Samples: 92235211001

Matrix: Water

Parameter	Units	Blank Result	Reporting Limit	Analyzed	Qualifiers
2,4,5-TP (Silvex)	mg/L	ND	0.00019	02/06/15 14:42	
2,4-D	mg/L	ND	0.00094	02/06/15 14:42	
2,4-DCAA (S)	%	41	42-142	02/06/15 14:42	P2,S0

LABORATORY CONTROL SAMPLE & LCSD: 1121837 1122560

Parameter	Units	Spike Conc.	LCS Result	LCSD Result	LCS % Rec	LCSD % Rec	% Rec Limits	RPD	Max RPD	Qualifiers
2,4,5-TP (Silvex)	mg/L	.012	0.0068	0.0050	56	42	27-170	30	30	
2,4-D	mg/L	.06	0.032	0.024	53	40	23-163	29	30	
2,4-DCAA (S)	%				51	39	42-142		30	P2,S0

Results presented on this page are in the units indicated by the "Units" column except where an alternate unit is presented to the right of the result.

REPORT OF LABORATORY ANALYSIS

This report shall not be reproduced, except in full,
without the written consent of Pace Analytical Services, Inc..

Pace Analytical®
www.pacelabs.com

Pace Analytical Services, Inc.
9800 Kincey Ave. Suite 100
Huntersville, NC 28078
(704)875-9092

QUALITY CONTROL DATA

Project: TOWN OF ORANGE WWTP
Pace Project No.: 92235211

QC Batch: OEXT/32849
QC Batch Method: EPA 3510
Associated Lab Samples: 92235211001

Analysis Method: EPA 8270
Analysis Description: 8270 TCLP MSSV

METHOD BLANK: 1387753
Associated Lab Samples: 92235211001

Matrix: Water

Parameter	Units	Blank Result	Reporting Limit	Analyzed	Qualifiers
1,4-Dichlorobenzene	ug/L	ND	50.0	02/10/15 13:07	
2,4,5-Trichlorophenol	ug/L	ND	50.0	02/10/15 13:07	
2,4,6-Trichlorophenol	ug/L	ND	50.0	02/10/15 13:07	
2,4-Dinitrotoluene	ug/L	ND	50.0	02/10/15 13:07	
2-Methylphenol(o-Cresol)	ug/L	ND	50.0	02/10/15 13:07	
3&4-Methylphenol(m&p Cresol)	ug/L	ND	50.0	02/10/15 13:07	
Hexachloro-1,3-butadiene	ug/L	ND	50.0	02/10/15 13:07	
Hexachlorobenzene	ug/L	ND	50.0	02/10/15 13:07	
Hexachloroethane	ug/L	ND	50.0	02/10/15 13:07	
Nitrobenzene	ug/L	ND	50.0	02/10/15 13:07	
Pentachlorophenol	ug/L	ND	50.0	02/10/15 13:07	
Pyridine	ug/L	ND	100	02/10/15 13:07	
2,4,6-Tribromophenol (S)	%	72	27-108	02/10/15 13:07	
2-Fluorobiphenyl (S)	%	58	13-107	02/10/15 13:07	
2-Fluorophenol (S)	%	31	10-110	02/10/15 13:07	
Nitrobenzene-d5 (S)	%	57	12-102	02/10/15 13:07	
Phenol-d6 (S)	%	20	10-110	02/10/15 13:07	
Terphenyl-d14 (S)	%	111	21-132	02/10/15 13:07	

LABORATORY CONTROL SAMPLE: 1387754

Parameter	Units	Spike Conc.	LCS Result	LCS % Rec	% Rec Limits	Qualifiers
1,4-Dichlorobenzene	ug/L	500	346	69	10-110	
2,4,5-Trichlorophenol	ug/L	500	401	80	39-108	
2,4,6-Trichlorophenol	ug/L	500	376	75	40-104	
2,4-Dinitrotoluene	ug/L	500	460	92	42-109	
2-Methylphenol(o-Cresol)	ug/L	500	302	60	31-110	
3&4-Methylphenol(m&p Cresol)	ug/L	500	268	54	30-110	
Hexachloro-1,3-butadiene	ug/L	500	328	66	10-110	
Hexachlorobenzene	ug/L	500	443	89	39-121	
Hexachloroethane	ug/L	500	333	67	10-110	
Nitrobenzene	ug/L	500	394	79	32-101	
Pentachlorophenol	ug/L	1000	837	84	18-108	
Pyridine	ug/L	500	170	34	10-110	
2,4,6-Tribromophenol (S)	%			90	27-108	
2-Fluorobiphenyl (S)	%			75	13-107	
2-Fluorophenol (S)	%			43	10-110	
Nitrobenzene-d5 (S)	%			73	12-102	
Phenol-d6 (S)	%			29	10-110	
Terphenyl-d14 (S)	%			105	21-132	

Results presented on this page are in the units indicated by the "Units" column except where an alternate unit is presented to the right of the result.

REPORT OF LABORATORY ANALYSIS

Date: 02/16/2015 08:16 AM

This report shall not be reproduced, except in full,
without the written consent of Pace Analytical Services, Inc..

Pace Analytical Services, Inc.
9800 Kincey Ave. Suite 100
Huntersville, NC 28078
(704)875-9092

QUALITY CONTROL DATA

Project: TOWN OF ORANGE WWTP
Pace Project No.: 92235211

MATRIX SPIKE & MATRIX SPIKE DUPLICATE: 1387755 1387756

Parameter	Units	92236364001 Result	MS Spike Conc.	MSD Spike Conc.	MS Result	MSD Result	MS % Rec	MSD % Rec	% Rec Limits	RPD	Qual
1,4-Dichlorobenzene	ug/L	ND	500	500	359	353	72	71	30-150	2	
2,4,5-Trichlorophenol	ug/L	ND	500	500	434	445	87	89	30-150	3	
2,4,6-Trichlorophenol	ug/L	ND	500	500	418	444	84	89	30-150	6	
2,4-Dinitrotoluene	ug/L	ND	500	500	532	516	106	103	30-150	3	
2-Methylphenol(o-Cresol)	ug/L	ND	500	500	275	266	55	53	30-150	3	
3&4-Methylphenol(m&p Cresol)	ug/L	ND	500	500	248	241	50	48	30-150	3	
Hexachloro-1,3-butadiene	ug/L	ND	500	500	403	392	81	78	30-150	3	
Hexachlorobenzene	ug/L	ND	500	500	480	494	96	99	30-150	3	
Hexachloroethane	ug/L	ND	500	500	369	353	74	71	30-150	4	
Nitrobenzene	ug/L	ND	500	500	412	427	82	85	30-150	3	
Pentachlorophenol	ug/L	ND	1000	1000	966	1030	95	101	30-150	6	
Pyridine	ug/L	ND	500	500	210	215	42	43	30-150	3	
2,4,6-Tribromophenol (S)	%						101	107	27-108		
2-Fluorobiphenyl (S)	%						77	83	13-107		
2-Fluorophenol (S)	%						41	39	10-110		
Nitrobenzene-d5 (S)	%						79	79	12-102		
Phenol-d6 (S)	%						27	25	10-110		
Terphenyl-d14 (S)	%						102	109	21-132		

Results presented on this page are in the units indicated by the "Units" column except where an alternate unit is presented to the right of the result.

This report shall not be reproduced, except in full,
without the written consent of Pace Analytical Services, Inc..

Pace Analytical Services, Inc.
9800 Kincey Ave. Suite 100
Huntersville, NC 28078
(704)875-9092

QUALITY CONTROL DATA

Project: TOWN OF ORANGE WWTP
Pace Project No.: 92235211

QC Batch: WET/35619
QC Batch Method: EPA 9095
Analysis Method: EPA 9095
Analysis Description: 9095 PAINT FILTER LIQUID TEST
Associated Lab Samples: 92235211002

SAMPLE DUPLICATE: 1387163

Parameter	Units	92235211002 Result	Dup Result	RPD	Qualifiers
Free Liquids		PASS	PASS		

Results presented on this page are in the units indicated by the "Units" column except where an alternate unit is presented to the right of the result.

This report shall not be reproduced, except in full,
without the written consent of Pace Analytical Services, Inc..

Pace Analytical Services, Inc.
9800 Kincey Ave. Suite 100
Huntersville, NC 28078
(704)875-9092

QUALIFIERS

Project: TOWN OF ORANGE WWTP
Pace Project No.: 92235211

DEFINITIONS

DF - Dilution Factor, if reported, represents the factor applied to the reported data due to changes in sample preparation, dilution of the sample aliquot, or moisture content.
ND - Not Detected at or above adjusted reporting limit.
J - Estimated concentration above the adjusted method detection limit and below the adjusted reporting limit.
MDL - Adjusted Method Detection Limit.
PQL - Practical Quantitation Limit.
RL - Reporting Limit.
S - Surrogate
1,2-Diphenylhydrazine (8270 listed analyte) decomposes to Azobenzene.
Consistent with EPA guidelines, unrounded data are displayed and have been used to calculate % recovery and RPD values.
LCS(D) - Laboratory Control Sample (Duplicate)
MS(D) - Matrix Spike (Duplicate)
DUP - Sample Duplicate
RPD - Relative Percent Difference
NC - Not Calculable.
SG - Silica Gel - Clean-Up
U - Indicates the compound was analyzed for, but not detected.
N-Nitrosodiphenylamine decomposes and cannot be separated from Diphenylamine using Method 8270. The result reported for each analyte is a combined concentration.
A separate vial preserved to a pH of 4-5 is recommended in SW846 Chapter 4 for the analysis of Acrolein and Acrylonitrile by EPA Method 8260.
Acid preservation may not be appropriate for 2-Chloroethylvinyl ether, Styrene, and Vinyl chloride.
Pace Analytical is TNI accredited. Contact your Pace PM for the current list of accredited analytes.
TNI - The NELAC Institute.

LABORATORIES

PASI-A	Pace Analytical Services - Asheville
PASI-C	Pace Analytical Services - Charlotte
PASI-O	Pace Analytical Services - Ormond Beach

ANALYTE QUALIFIERS

1g	8260 results are from a total analysis which show that analytes are not present or that they are present but at such low levels that the appropriate regulatory levels could not possibly be exceeded, per Section 1.2 of Method 1311.
D3	Sample was diluted due to the presence of high levels of non-target analytes or other matrix interference.
P2	Re-extraction or re-analysis could not be performed due to insufficient sample amount.
S0	Surrogate recovery outside laboratory control limits.
S4	Surrogate recovery not evaluated against control limits due to sample dilution.

This report shall not be reproduced, except in full, without the written consent of Pace Analytical Services, Inc..

Pace Analytical Services, Inc.
9800 Kincey Ave. Suite 100
Huntersville, NC 28078
(704)875-9092

QUALITY CONTROL DATA CROSS REFERENCE TABLE

Project: TOWN OF ORANGE WWTP
Pace Project No.: 92235211

Lab ID	Sample ID	QC Batch Method	QC Batch	Analytical Method	Analytical Batch
92235211001	**FULL TCLP**	EPA 3510	OEXT/32904	EPA 8081	GCSV/20330
92235211001	**FULL TCLP**	EPA 3510	OEXT/20751	EPA 8151	GCSV/13613
92235211001	**FULL TCLP**	EPA 3010	MPRP/17858	EPA 6010	ICP/16070
92235211001	**FULL TCLP**	EPA 7470	MERP/7560	EPA 7470	MERC/7257
92235211001	**FULL TCLP**	EPA 3510	OEXT/32849	EPA 8270	MSSV/10289
92235211001	**FULL TCLP**	EPA 8260	MSV/30198		
92235211002	**PAINT FILTER & % SOLIDS**	EPA 9095	WET/35619		

This report shall not be reproduced, except in full,
without the written consent of Pace Analytical Services, Inc..

Pace Analytical® www.pacelabs.com	Document Name: **Sample Condition Upon Receipt (SCUR)**	Document Revised: March 13, 2013 Page 1 of 2
	Document No.: F-EDN-CS-003-rev.09	Issuing Authorities: Pace Eden Quality Office

Client Name: Town of Orange

Where Received: ☐ Huntersville ☐ Asheville ☐ Eden ☐ Raleigh

Courier (circle): Fed Ex **UPS** **USPS** **Client** **Commercial** **Pace** **Other**_____

Custody Seal on Cooler/Box Present: ☐yes ☑no Seals Intact: ☐ yes ☐ no

Packing Material: ☐Bubble Wrap ☐Bubble Bags ☑None ☐ Other_____

Thermometer Used: IR Gun ED007 TY **Type of Ice:** (Wet) Blue None ☐ Samples on Ice, cooling process has begun

Temp Correction Factor: Add / Subtract 1 C

Corrected Cooler Temp.: 1.2 C **Biological Tissue is Frozen:** Yes No N/A

Temp should be above freezing to 6°C

Date and Initials of person examining contents: 1/28/15 dr

Comments:

Chain of Custody Present:	☑Yes	☐No	☐N/A	1.
Chain of Custody Filled Out:	☑Yes	☐No	☐N/A	2.
Chain of Custody Relinquished:	☑Yes	☐No	☐N/A	3.
Sampler Name & Signature on COC:	☑Yes	☐No	☐N/A	4.
Samples Arrived within Hold Time:	☑Yes	☐No	☐N/A	5.
Short Hold Time Analysis (<72hr):	☐Yes	☑No	☐N/A	6.
Rush Turn Around Time Requested:	☑Yes	☐No	☐N/A	7.
Sufficient Volume:	☑Yes	☐No	☐N/A	8.
Correct Containers Used:	☑Yes	☐No	☐N/A	9.
-Pace Containers Used:	☑Yes	☐No	☐N/A	
Containers Intact:	☑Yes	☐No	☐N/A	10.
Filtered volume received for Dissolved tests	☐Yes	☐No	☑N/A	11.
Sample Labels match COC:	☑Yes	☐No	☐N/A	12.
-Includes date/time/ID/Analysis Matrix: SL				
All containers needing preservation have been checked.	☐Yes	☐No	☑N/A	13.
All containers needing preservation are found to be in compliance with EPA recommendation.	☐Yes	☐No	☑N/A	
exceptions: VOA, coliform, TOC, O&G, WI-DRO (water)	☐Yes	☐No		Initial when completed dp
Samples checked for dechlorination:	☐Yes	☐No	☑N/A	14.
Headspace in VOA Vials (>6mm):	☐Yes	☐No	☑N/A	15.
Trip Blank Present:	☐Yes	☐No	☑N/A	16.
Trip Blank Custody Seals Present	☐Yes	☐No	☑N/A	
Pace Trip Blank Lot # (if purchased):_____				

Client Notification/ Resolution: Field Data Required? Y / N

Person Contacted: _____ Date/Time: _____

Comments/ Resolution: _____

SCURF Review: BLG Date: 1/28/15

SRF Review: JKP Date: 1/30/15

Note: Whenever there is a discrepancy affecting North Carolina compliance samples, a copy of this form will be sent to the North Carolina DEHNR Certification Office (i.e out of hold, incorrect preservative, out of temp, incorrect containers)

WO# : 92235211

92235211

Pace Analytical®
www.pacelabs.com

CHAIN-OF-CUSTODY / Analytical Request Document

The Chain-of-Custody is a LEGAL DOCUMENT. All relevant fields must be completed accurately.

Section A Required Client Information:

Company: Town of Orange WWTP
Address: 13222 Spicers Mill Rd
Orange, VA 22960
Email To: ams@townofororange.org
Phone: 540-672-3112 Fax:
Requested Due Date/TAT: RUSH

Section B Required Project Information:

Report To: Michelle Steinberger
Copy To:
Purchase Order No.:
Project Name:
Project Number:

Section C Invoice Information:

Attention: Michelle Steinberger
Company Name: Town of Orange WWTP
Address: 13222 Spicers Mill Rd Orange VA 22960
Pace Quote Reference:
Pace Project Manager:
Pace Profile #:

Page: of
1829641

REGULATORY AGENCY
☐ NPDES ☐ GROUND WATER ☐ DRINKING WATER
☐ UST ☐ RCRA ☐ OTHER

Site Location STATE: VA

Section D Required Client Information

Matrix Codes MATRIX / CODE: Drinking Water DW, Water WT, Waste Water WW, Product P, Soil/Solid SL, Oil OL, Wipe WP, Air AR, Tissue TS, Other OT

SAMPLE ID (A-Z, 0-9 / ,-) Sample IDs MUST BE UNIQUE

Requested Analysis Filtered (Y/N)

ITEM #	SAMPLE ID	MATRIX CODE (see valid codes to left)	SAMPLE TYPE (G=GRAB C=COMP)	COLLECTED Composite Start DATE	COLLECTED Composite Start TIME	COLLECTED Composite End/Grab DATE	COLLECTED Composite End/Grab TIME	SAMPLE TEMP AT COLLECTION	# OF CONTAINERS	Preservatives: Unpreserved	H_2SO_4	HNO_3	HCl	NaOH	$Na_2S_2O_3$	Methanol	Other	Analysis Test (Y/N): Full TCLP	Paint Filter	% Solids	Residual Chlorine (Y/N)	Pace Project No./ Lab I.D.
1	TCLP	SL	G			1/27/15	0800		2	X								X				92235211
2	Paint Filter / % Solids	SL	G			1/27/15	0800		1	X									X	X		
3																						
4																						
5																						
6																						
7																						
8																						
9																						
10																						
11																						
12																						

ADDITIONAL COMMENTS	RELINQUISHED BY / AFFILIATION	DATE	TIME	ACCEPTED BY / AFFILIATION	DATE	TIME	SAMPLE CONDITIONS: Temp in °C	Received on Ice (Y/N)	Custody Sealed Cooler (Y/N)	Samples Intact (Y/N)
	[signature]	1/27/15	09:17	Denise Pierce	1/28/15	0955	1.2	Y	N	Y

ORIGINAL

SAMPLER NAME AND SIGNATURE
PRINT Name of SAMPLER: Jesse Redmon
SIGNATURE of SAMPLER: [signature]
DATE Signed (MM/DD/YY): 01/27/15

*Important Note: By signing this form you are accepting Pace's NET 30 day payment terms and agreeing to late charges of 1.5% per month for any invoices not paid within 30 days.

F-ALL-Q-020rev.07, 15-May-2007

Pace Analytical®
www.pacelabs.com

CHAIN-OF-CUSTODY / Analytical Request Document

The Chain-of-Custody is a LEGAL DOCUMENT. All relevant fields must be completed accurately.

Page: of

1829641

Section A Required Client Information:

Company: Town of Orange WWTP
Address: 13222 Spicers Mill Rd
Orange VA 22960
Email To: ams@townoforangeva.org
Phone: 540-672-3112 Fax:
Requested Due Date/TAT: RUSH

Section B Required Project Information:

Report To: Michelle Steinberger
Copy To:
Purchase Order No.:
Project Name:
Project Number:

Section C Invoice Information:

Attention: Michelle Steinberger
Company Name: Town of Orange WWTP
Address: 13222 Spicers Mill Rd Orange VA
Pace Quote Reference: 22960
Pace Project Manager:
Pace Profile #:

REGULATORY AGENCY

☐ NPDES ☐ GROUND WATER ☐ DRINKING WATER
☐ UST ☐ RCRA ☐ OTHER

Site Location STATE: VA

Section D Required Client Information

Matrix Codes MATRIX / CODE: Drinking Water DW, Water WT, Waste Water WW, Product P, Soil/Solid SL, Oil OL, Wipe WP, Air AR, Tissue TS, Other OT

SAMPLE ID (A-Z, 0-9 / ,-) Sample IDs MUST BE UNIQUE

Requested Analysis Filtered (Y/N)

ITEM #	SAMPLE ID	MATRIX CODE (see valid codes to left)	SAMPLE TYPE (G=GRAB C=COMP)	COLLECTED COMPOSITE START DATE	COLLECTED COMPOSITE START TIME	COLLECTED COMPOSITE END/GRAB DATE	COLLECTED COMPOSITE END/GRAB TIME	SAMPLE TEMP AT COLLECTION	# OF CONTAINERS	Unpreserved	H_2SO_4	HNO_3	HCl	NaOH	$Na_2S_2O_3$	Methanol	Other	Analysis Test (Y/N) Full TCLP	Paint Filter	% Solids	Residual Chlorine (Y/N)	Pace Project No./ Lab I.D. 0223521
1	TCLP	SL	G			1/27/15	0900		2	X								X				
2	Paint Filter / % Solids	SL	G			1/27/15	0900		1	X									X	X		
3																						
4																						
5																						
6																						
7																						
8																						
9																						
10																						
11																						
12																						

ADDITIONAL COMMENTS	RELINQUISHED BY / AFFILIATION	DATE	TIME	ACCEPTED BY / AFFILIATION	DATE	TIME	SAMPLE CONDITIONS			
	[illegible]	1/27/15	0900	Denise Pace	1/29/15	0955	1.2	Y	N	Y

2

SAMPLER NAME AND SIGNATURE

PRINT Name of SAMPLER: Jesse Redmon

SIGNATURE of SAMPLER: [illegible] DATE Signed (MM/DD/YY): 01/27/15

Temp in °C | Received on Ice (Y/N) | Custody Sealed Cooler (Y/N) | Samples Intact (Y/N)

*Important Note: By signing this form you are accepting Pace's NET 30 day payment terms and agreeing to late charges of 1.5% per month for any invoices not paid within 30 days.

F-ALL-Q-020rev.07, 15-May-2007

CHAIN-OF-CUSTODY / Analytical Request Document

The Chain-of-Custody is a LEGAL DOCUMENT. All relevant fields must be completed accurately.

Pace Analytical
www.pacelabs.com

Page: of

1829641

Section A Required Client Information:

Company: Town of Orange WWTP
Address: 15022 Spring Mill Rd, Orange VA 22960
Email To: amc@townoforange.org
Phone: 540-672-3312 Fax:
Requested Due Date/TAT: RUSH

Section B Required Project Information:

Report To: Michelle Gaidarenko
Copy To:
Purchase Order No.:
Project Name:
Project Number:

Section C Invoice Information:

Attention: Michelle Gaidarenko
Company Name: Town of Orange WWTP
Address: 15022 Spring Mill Rd Orange VA 22960
Pace Quote Reference:
Pace Project Manager:
Pace Profile #:

REGULATORY AGENCY

☐ NPDES ☐ GROUND WATER ☐ DRINKING WATER
☐ UST ☐ RCRA ☐ OTHER

Site Location STATE: VA

Section D Required Client Information

Matrix Codes MATRIX / CODE: Drinking Water DW, Water WT, Waste Water WW, Product P, Soil/Solid SL, Oil OL, Wipe WP, Air AR, Tissue TS, Other OT

SAMPLE ID (A-Z, 0-9 / ,-) Sample IDs MUST BE UNIQUE

Requested Analysis Filtered (Y/N)

ITEM #	SAMPLE ID	MATRIX CODE (see valid codes to left)	SAMPLE TYPE (G=GRAB C=COMP)	COLLECTED COMPOSITE START DATE	COLLECTED COMPOSITE START TIME	COLLECTED COMPOSITE END/GRAB DATE	COLLECTED COMPOSITE END/GRAB TIME	SAMPLE TEMP AT COLLECTION	# OF CONTAINERS	Unpreserved	H_2SO_4	HNO_3	HCl	NaOH	$Na_2S_2O_3$	Methanol	Other	Analysis Test (Y/N) N	Full TCLP	Paint Filter	% Solids	Residual Chlorine (Y/N)	Pace Project No./ Lab I.D.
1	TCLP	SL	G			1/27/15	0900		2	X									X				92235211
2	Paint Filter / % Solids	SL	G			1/27/15	0900		1	X										X	X		
3																							
4																							
5																							
6																							
7																							
8																							
9																							
10																							
11																							
12																							

ADDITIONAL COMMENTS	RELINQUISHED BY / AFFILIATION	DATE	TIME	ACCEPTED BY / AFFILIATION	DATE	TIME	SAMPLE CONDITIONS			
	[signature]	1/27/15	0955	Deux Pierce	1/27/15	0955	1.2	Y	N	Y
							Temp in °C	Received on Ice (Y/N)	Custody Sealed Cooler (Y/N)	Samples Intact (Y/N)

SAMPLER NAME AND SIGNATURE

PRINT Name of SAMPLER: Jesse Redman

SIGNATURE of SAMPLER: [signature] DATE Signed (MM/DD/YY): 01/27/15

3

*Important Note: By signing this form you are accepting Pace's NET 30 day payment terms and agreeing to late charges of 1.5% per month for any invoices not paid within 30 days.

F-ALL-Q-020rev.07, 15-May-2007

Chain of Custody

Pace Analytical®
www.pacelabs.com

Workorder: 92235211 **Workorder Name:** TOWN OF ORANGE WWTP **Owner Received Date:** 1/28/2015 **Results Requested By:** 2/11/2015

Report To

Terri Page
Pace Analytical Services, Inc.
9800 Kincey Ave., Suite 100
Huntersville, NC 28078
Phone (704)875-9092
Fax (704)875-9091

Subcontract To

Pace Analytical Ormond Beach
8 East Tower Circle
Ormond Beach, FL 32174
Phone (386)672-5668

Requested Analysis

Item	Sample ID	Sample Type	Collect Date/Time	Lab ID	Matrix	Preserved Containers: Unpreserved	TCLP 8151	LAB USE ONLY
1	FULL TCLP	PS	1/27/2015 08:00	92235211001	Solid	1	X	
2								
3								
4								
5								

Transfers	Released By	Date/Time	Received By	Date/Time
1				
2				
3				

Comments

Cooler Temperature on Receipt _____ °C **Custody Seal** Y or N **Received on Ice** Y or N **Samples Intact** Y or N

****In order to maintain client confidentiality, location/name of the sampling site, sampler's name and signature may not be provided on this COC document.*
This chain of custody is considered complete as is since this information is available in the owner laboratory.

Pace Analytical®
www.pacelabs.com

Ship To:
Pace Analytical Ormond Beach
8 East Tower Circle
Ormond Beach, FL 32174
Phone (386)672-5668

INTER_LABORATORY WORK ORDER # 92235211
(To be completed by sending lab)

Sending Project No:	92235211
Receiving Project No:	
Check Box for Consolidated Invoice:	☐
Date Prepared:	01/28/15
REQUESTED COMPLETION DATE:	**2/11/2015**

Sending Region	IR92-Charlotte	Sending Project Mgr.	Terri Page
Receiving Region	IR35-Ormond Beach	External Client	Town of Orange WWTP
State of Sample Origin	VA	QC Deliverable	STD REPORT

All questions should be addressed to sending project manager.

Requested Reportable Units _____ Report Wet or Dry Weight? Dry Weight Cert. Needed _____

WORK REQUESTED

Method Description	Container Type	Quantity of containers	Preservative	Quantity of Samples	Unit Price	Amount
8151S TCLP	BP3U		Unpreserved	1	$145.00	$145.00
					TOTAL	$145.00

Special Requirements: _____

Receiving Region Department	Acctg. Code	Totals from above	Revenue Allocation	
			Receiving Region (80%)	Client Services Dept. Sending Region (20%)
GC Semivolatiles	31	$145.00	$116.00	$29.00
* Custom Revenue Allocation	TOTAL	$145.00	$116.00	$29.00

FOR ANALYTICAL WORK COMPLETED THIS SECTION ALSO

Chain of Custody Included: ☐ Yes ☐ No Return Samples to Sending Region: ☐ Yes ☐ No

Matrix: ☐ Soil ☐ Water ☐ Air ☐ Other (identify) _____

CONFIRMATION OF WORK COMPLETED

Date Completed: _____ Receiving Project Manager: _____

DISPOSITION of FORM

Original sent to the receiving lab - Copy kept at the sending lab.

When work completed: Original sent to the ABM at the receiving laboratory. Copies are made to corporate as needed.

Pace Analytical®
www.pacelabs.com

Pace Analytical Services, Inc.
205 East Meadow Road - Suite A
Eden, NC 27288
(336)623-8921

Pace Analytical Services, Inc.
2225 Riverside Dr.
Asheville, NC 28804
(828)254-7176

Pace Analytical Services, Inc.
9800 Kincey Ave. Suite 100
Huntersville, NC 28078
(704)875-9092

January 15, 2014

Michelle Stienburger
Town of Orange WWTP
13222 Spicers Mill Rd
Orange, VA 22960

RE: Project: Belt Press Sludge 12/17
Pace Project No.: 92184330

Dear Michelle Stienburger:
Enclosed are the analytical results for sample(s) received by the laboratory on December 19, 2013. The results relate only to the samples included in this report. Results reported herein conform to the most current TNI standards and the laboratory's Quality Assurance Manual, where applicable, unless otherwise noted in the body of the report.

Analyses were performed at the Pace Analytical Services location indicated on the sample analyte page for analysis unless otherwise footnoted.

If you have any questions concerning this report, please feel free to contact me.

Sincerely,

Chris Derouen

christopher.derouen@pacelabs.com
Project Manager

Enclosures

Pace Analytical®
www.pacelabs.com

Pace Analytical Services, Inc.
205 East Meadow Road - Suite A
Eden, NC 27288
(336)623-8921

Pace Analytical Services, Inc.
2225 Riverside Dr.
Asheville, NC 28804
(828)254-7176

Pace Analytical Services, Inc.
9800 Kincey Ave. Suite 100
Huntersville, NC 28078
(704)875-9092

CERTIFICATIONS

Project: Belt Press Sludge 12/17
Pace Project No.: 92184330

Ormond Beach Certification IDs
8 East Tower Circle, Ormond Beach, FL 32174
Alabama Certification #: 41320
Arizona Certification #: AZ0735
Colorado Certification: FL NELAC Reciprocity
Connecticut Certification #: PH-0216
Delaware Health and Social Services
Florida Certification #: E83079
Georgia Certification #: 955
Guam Certification: FL NELAC Reciprocity
Hawaii Certification: FL NELAC Reciprocity
Illinois Certification #: 200068
Indiana Certification: FL NELAC Reciprocity
Kansas Certification #: E-10383
Kentucky Certification #: 90050
Louisiana Certification #: FL NELAC Reciprocity
Louisiana Environmental Certificate #: 05007
Maine Certification #: FL01264
Maryland Department of the Environment
Massachusetts Certification #: M-FL1264
Michigan Certification #: 9911
Mississippi Certification: FL NELAC Reciprocity
Missouri Certification #: 236
Montana Certification #: Cert 0074
Nevada Certification: FL NELAC Reciprocity
New Hampshire Certification #: 2958
New Jersey Certification #: FL765
New York Certification #: 11608
North Carolina Environmental Certificate #: 667
North Carolina Certification #: 12710
Pennsylvania Certification #: 68-00547
Puerto Rico Certification #: FL01264
South Carolina Department of Health and Environmental Control
Tennessee Certification #: TN02974
Texas Certification: FL NELAC Reciprocity
US Virgin Islands Certification: FL NELAC Reciprocity
Virginia Environmental Certification #: 460165
Washington Certification #: C955
West Virginia Certification #: 9962C
Wisconsin Certification #: 399079670
Wyoming (EPA Region 8): FL NELAC Reciprocity

Charlotte Certification IDs
9800 Kincey Ave. Ste 100, Huntersville, NC 28078
North Carolina Drinking Water Certification #: 37706
North Carolina Field Services Certification #: 5342
North Carolina Wastewater Certification #: 12
South Carolina Certification #: 99006001
Florida/NELAP Certification #: E87627
Kentucky UST Certification #: 84
West Virginia Certification #: 357
Virginia/VELAP Certification #: 460221

Asheville Certification IDs
2225 Riverside Dr., Asheville, NC 28804
Florida/NELAP Certification #: E87648
Massachusetts Certification #: M-NC030
North Carolina Drinking Water Certification #: 37712
North Carolina Wastewater Certification #: 40
South Carolina Certification #: 99030001
West Virginia Certification #: 356
Virginia/VELAP Certification #: 460222

This report shall not be reproduced, except in full,
without the written consent of Pace Analytical Services, Inc..

Pace Analytical®
www.pacelabs.com

Pace Analytical Services, Inc.
205 East Meadow Road - Suite A
Eden, NC 27288
(336)623-8921

Pace Analytical Services, Inc.
2225 Riverside Dr.
Asheville, NC 28804
(828)254-7176

Pace Analytical Services, Inc.
9800 Kincey Ave. Suite 100
Huntersville, NC 28078
(704)875-9092

SAMPLE ANALYTE COUNT

Project: Belt Press Sludge 12/17
Pace Project No.: 92184330

Lab ID	Sample ID	Method	Analysts	Analytes Reported	Laboratory
92184330002	**BELT PRESS SLUDGE CAKE**	EPA 8081	RES	8	PASI-C
		EPA 8151	LJM	3	PASI-O
		EPA 6010	JMW	7	PASI-A
		EPA 7470	MTS	1	PASI-A
		EPA 8270	BPJ	18	PASI-C
		EPA 8260	DLK	14	PASI-C
		ASTM D2974-87	TNM	1	PASI-C
		SM 2540G	TNM	1	PASI-A
		EPA 9095	JTM	1	PASI-A

This report shall not be reproduced, except in full,
without the written consent of Pace Analytical Services, Inc..

Pace Analytical
www.pacelabs.com

Pace Analytical Services, Inc.
205 East Meadow Road - Suite A
Eden, NC 27288
(336)623-8921

Pace Analytical Services, Inc.
2225 Riverside Dr.
Asheville, NC 28804
(828)254-7176

Pace Analytical Services, Inc.
9800 Kincey Ave. Suite 100
Huntersville, NC 28078
(704)875-9092

ANALYTICAL RESULTS

Project: Belt Press Sludge 12/17
Pace Project No.: 92184330

Sample: BELT PRESS SLUDGE CAKE **Lab ID: 92184330002** Collected: 12/17/13 08:55 Received: 12/19/13 12:30 Matrix: Solid

Results reported on a "dry-weight" basis

Parameters	Results	Units	Report Limit	DF	Prepared	Analyzed	CAS No.	Qual
8081 GCS Pesticides, TCLP	Analytical Method: EPA 8081 Preparation Method: EPA 3510							
	Leachate Method/Date: EPA 1311; 01/02/14 14:15							
gamma-BHC (Lindane)	ND	ug/L	0.50	1	01/04/14 12:00	01/07/14 14:06	58-89-9	
Chlordane (Technical)	ND	ug/L	3.0	1	01/04/14 12:00	01/07/14 14:06	57-74-9	
Endrin	ND	ug/L	0.50	1	01/04/14 12:00	01/07/14 14:06	72-20-8	
Heptachlor epoxide	ND	ug/L	0.50	1	01/04/14 12:00	01/07/14 14:06	1024-57-3	
Methoxychlor	ND	ug/L	1000	1	01/04/14 12:00	01/07/14 14:06	72-43-5	
Toxaphene	ND	ug/L	3.0	1	01/04/14 12:00	01/07/14 14:06	8001-35-2	
Surrogates								
Decachlorobiphenyl (S)	76	%	10-138	1	01/04/14 12:00	01/07/14 14:06	2051-24-3	
Tetrachloro-m-xylene (S)	51	%	10-110	1	01/04/14 12:00	01/07/14 14:06	877-09-8	
8151 Chlorinate Herbicide TCLP	Analytical Method: EPA 8151 Preparation Method: EPA 3510							
2,4-D	ND	mg/L	0.010	1	01/06/14 08:00	01/07/14 01:43	94-75-7	
2,4,5-TP (Silvex)	ND	mg/L	0.010	1	01/06/14 08:00	01/07/14 01:43	93-72-1	
Surrogates								
2,4-DCAA (S)	110	%	70-130	1	01/06/14 08:00	01/07/14 01:43	19719-28-9	
6010 MET ICP, TCLP	Analytical Method: EPA 6010 Preparation Method: EPA 3010							
	Leachate Method/Date: EPA 1311; 12/27/13 17:15							
Arsenic	ND	mg/L	0.050	1	12/28/13 11:25	12/30/13 17:30	7440-38-2	
Barium	ND	mg/L	0.25	1	12/28/13 11:25	12/30/13 17:30	7440-39-3	
Cadmium	ND	mg/L	0.0050	1	12/28/13 11:25	12/30/13 17:30	7440-43-9	
Chromium	ND	mg/L	0.025	1	12/28/13 11:25	12/30/13 17:30	7440-47-3	
Lead	ND	mg/L	0.025	1	12/28/13 11:25	12/30/13 17:30	7439-92-1	
Selenium	ND	mg/L	0.10	1	12/28/13 11:25	12/30/13 17:30	7782-49-2	
Silver	ND	mg/L	0.025	1	12/28/13 11:25	12/30/13 17:30	7440-22-4	
7470 Mercury, TCLP	Analytical Method: EPA 7470 Preparation Method: EPA 7470							
	Leachate Method/Date: EPA 1311; 12/27/13 17:15							
Mercury	ND	ug/L	0.20	1	12/30/13 10:50	12/30/13 20:14	7439-97-6	
8270 MSSV TCLP Sep Funnel	Analytical Method: EPA 8270 Preparation Method: EPA 3510							
	Leachate Method/Date: EPA 1311; 01/02/14 14:15							
1,4-Dichlorobenzene	ND	ug/L	50.0	1	01/04/14 11:00	01/06/14 18:47	106-46-7	
2,4-Dinitrotoluene	ND	ug/L	50.0	1	01/04/14 11:00	01/06/14 18:47	121-14-2	
Hexachloro-1,3-butadiene	ND	ug/L	50.0	1	01/04/14 11:00	01/06/14 18:47	87-68-3	
Hexachlorobenzene	ND	ug/L	50.0	1	01/04/14 11:00	01/06/14 18:47	118-74-1	
Hexachloroethane	ND	ug/L	50.0	1	01/04/14 11:00	01/06/14 18:47	67-72-1	
2-Methylphenol(o-Cresol)	ND	ug/L	50.0	1	01/04/14 11:00	01/06/14 18:47	95-48-7	
3&4-Methylphenol(m&p Cresol)	ND	ug/L	50.0	1	01/04/14 11:00	01/06/14 18:47		
Nitrobenzene	ND	ug/L	50.0	1	01/04/14 11:00	01/06/14 18:47	98-95-3	
Pentachlorophenol	ND	ug/L	100	1	01/04/14 11:00	01/06/14 18:47	87-86-5	
Pyridine	ND	ug/L	50.0	1	01/04/14 11:00	01/06/14 18:47	110-86-1	
2,4,5-Trichlorophenol	ND	ug/L	50.0	1	01/04/14 11:00	01/06/14 18:47	95-95-4	

REPORT OF LABORATORY ANALYSIS

This report shall not be reproduced, except in full,
without the written consent of Pace Analytical Services, Inc..

Pace Analytical®
www.pacelabs.com

Pace Analytical Services, Inc.
205 East Meadow Road - Suite A
Eden, NC 27288
(336)623-8921

Pace Analytical Services, Inc.
2225 Riverside Dr.
Asheville, NC 28804
(828)254-7176

Pace Analytical Services, Inc.
9800 Kincey Ave. Suite 100
Huntersville, NC 28078
(704)875-9092

ANALYTICAL RESULTS

Project: Belt Press Sludge 12/17
Pace Project No.: 92184330

Sample: BELT PRESS SLUDGE CAKE **Lab ID: 92184330002** Collected: 12/17/13 08:55 Received: 12/19/13 12:30 Matrix: Solid

Results reported on a "dry-weight" basis

Parameters	Results	Units	Report Limit	DF	Prepared	Analyzed	CAS No.	Qual
8270 MSSV TCLP Sep Funnel	Analytical Method: EPA 8270 Preparation Method: EPA 3510							
	Leachate Method/Date: EPA 1311; 01/02/14 14:15							
2,4,6-Trichlorophenol	ND	ug/L	50.0	1	01/04/14 11:00	01/06/14 18:47	88-06-2	
Surrogates								
Nitrobenzene-d5 (S)	52	%	12-102	1	01/04/14 11:00	01/06/14 18:47	4165-60-0	
2-Fluorobiphenyl (S)	52	%	13-107	1	01/04/14 11:00	01/06/14 18:47	321-60-8	
Terphenyl-d14 (S)	93	%	21-132	1	01/04/14 11:00	01/06/14 18:47	1718-51-0	
Phenol-d6 (S)	28	%	10-110	1	01/04/14 11:00	01/06/14 18:47	13127-88-3	
2-Fluorophenol (S)	36	%	10-110	1	01/04/14 11:00	01/06/14 18:47	367-12-4	
2,4,6-Tribromophenol (S)	74	%	27-108	1	01/04/14 11:00	01/06/14 18:47	118-79-6	
8260 MSV TCLP	Analytical Method: EPA 8260							
Benzene	ND	ug/L	192	38.5		12/31/13 15:17	71-43-2	
2-Butanone (MEK)	**475**	ug/L	385	38.5		12/31/13 15:17	78-93-3	
Carbon tetrachloride	ND	ug/L	192	38.5		12/31/13 15:17	56-23-5	
Chlorobenzene	ND	ug/L	192	38.5		12/31/13 15:17	108-90-7	
Chloroform	ND	ug/L	192	38.5		12/31/13 15:17	67-66-3	
1,4-Dichlorobenzene	ND	ug/L	192	38.5		12/31/13 15:17	106-46-7	
1,2-Dichloroethane	ND	ug/L	192	38.5		12/31/13 15:17	107-06-2	
1,1-Dichloroethene	ND	ug/L	192	38.5		12/31/13 15:17	75-35-4	
Tetrachloroethene	ND	ug/L	192	38.5		12/31/13 15:17	127-18-4	
Trichloroethene	ND	ug/L	192	38.5		12/31/13 15:17	79-01-6	
Vinyl chloride	ND	ug/L	192	38.5		12/31/13 15:17	75-01-4	
Surrogates								
1,2-Dichloroethane-d4 (S)	102	%	70-130	38.5		12/31/13 15:17	17060-07-0	1g
Toluene-d8 (S)	100	%	67-135	38.5		12/31/13 15:17	2037-26-5	
4-Bromofluorobenzene (S)	105	%	70-130	38.5		12/31/13 15:17	460-00-4	
Percent Moisture	Analytical Method: ASTM D2974-87							
Percent Moisture	**77.8**	%	0.10	1		01/02/14 12:52		
2540G Total Percent Solids	Analytical Method: SM 2540G							
Total Solids	**22.2**	%	0.000010	1		01/02/14 08:19		
9095 Paint Filter Liquid Test	Analytical Method: EPA 9095							
Free Liquids	**Pass**			1		12/24/13 14:12		

This report shall not be reproduced, except in full,
without the written consent of Pace Analytical Services, Inc..

Pace Analytical®
www.pacelabs.com

Pace Analytical Services, Inc.
205 East Meadow Road - Suite A
Eden, NC 27288
(336)623-8921

Pace Analytical Services, Inc.
2225 Riverside Dr.
Asheville, NC 28804
(828)254-7176

Pace Analytical Services, Inc.
9800 Kincey Ave. Suite 100
Huntersville, NC 28078
(704)875-9092

QUALITY CONTROL DATA

Project: Belt Press Sludge 12/17
Pace Project No.: 92184330

QC Batch: MERP/5997
QC Batch Method: EPA 7470
Analysis Method: EPA 7470
Analysis Description: 7470 Mercury TCLP
Associated Lab Samples: 92184330002

METHOD BLANK: 1114121
Matrix: Water
Associated Lab Samples: 92184330002

Parameter	Units	Blank Result	Reporting Limit	Analyzed	Qualifiers
Mercury	ug/L	ND	0.20	12/30/13 19:50	

LABORATORY CONTROL SAMPLE: 1114122

Parameter	Units	Spike Conc.	LCS Result	LCS % Rec	% Rec Limits	Qualifiers
Mercury	ug/L	2.5	2.3	94	80-120	

MATRIX SPIKE & MATRIX SPIKE DUPLICATE: 1114123 1114124

Parameter	Units	92184178002 Result	MS Spike Conc.	MSD Spike Conc.	MS Result	MSD Result	MS % Rec	MSD % Rec	% Rec Limits	RPD	Qual
Mercury	ug/L	0.24	2.5	2.5	1.3	1.0	43	31	75-125	27	M1,R1

This report shall not be reproduced, except in full,
without the written consent of Pace Analytical Services, Inc..

Pace Analytical®
www.pacelabs.com

Pace Analytical Services, Inc.
205 East Meadow Road - Suite A
Eden, NC 27288
(336)623-8921

Pace Analytical Services, Inc.
2225 Riverside Dr.
Asheville, NC 28804
(828)254-7176

Pace Analytical Services, Inc.
9800 Kincey Ave. Suite 100
Huntersville, NC 28078
(704)875-9092

QUALITY CONTROL DATA

Project: Belt Press Sludge 12/17
Pace Project No.: 92184330

QC Batch: MPRP/14963
QC Batch Method: EPA 3010
Analysis Method: EPA 6010
Analysis Description: 6010 MET TCLP
Associated Lab Samples: 92184330002

METHOD BLANK: 1113949
Matrix: Water
Associated Lab Samples: 92184330002

Parameter	Units	Blank Result	Reporting Limit	Analyzed	Qualifiers
Arsenic	mg/L	ND	0.050	12/30/13 16:48	
Barium	mg/L	ND	0.25	12/30/13 16:48	
Cadmium	mg/L	ND	0.0050	12/30/13 16:48	
Chromium	mg/L	ND	0.025	12/30/13 16:48	
Lead	mg/L	ND	0.025	12/30/13 16:48	
Selenium	mg/L	ND	0.10	12/30/13 16:48	
Silver	mg/L	ND	0.025	12/30/13 16:48	

LABORATORY CONTROL SAMPLE: 1113950

Parameter	Units	Spike Conc.	LCS Result	LCS % Rec	% Rec Limits	Qualifiers
Arsenic	mg/L	2.5	2.5	100	80-120	
Barium	mg/L	2.5	2.2	89	80-120	
Cadmium	mg/L	2.5	2.3	92	80-120	
Chromium	mg/L	2.5	2.4	96	80-120	
Lead	mg/L	2.5	2.2	87	80-120	
Selenium	mg/L	2.5	2.5	99	80-120	
Silver	mg/L	1.2	1.2	96	80-120	

MATRIX SPIKE & MATRIX SPIKE DUPLICATE: 1113951 1113952

Parameter	Units	92184315001 Result	MS Spike Conc.	MSD Spike Conc.	MS Result	MSD Result	MS % Rec	MSD % Rec	% Rec Limits	RPD	Qual
Arsenic	mg/L	ND	2.5	2.5	2.6	2.8	103	110	75-125	7	
Barium	mg/L	3.6	2.5	2.5	5.8	6.2	86	104	75-125	8	
Cadmium	mg/L	0.044	2.5	2.5	2.4	2.6	94	102	75-125	7	
Chromium	mg/L	ND	2.5	2.5	2.5	2.6	98	106	75-125	7	
Lead	mg/L	3.0	2.5	2.5	5.2	5.6	85	101	75-125	7	
Selenium	mg/L	ND	2.5	2.5	2.5	2.7	100	109	75-125	8	
Silver	mg/L	ND	1.2	1.2	1.2	1.3	98	106	75-125	8	

This report shall not be reproduced, except in full,
without the written consent of Pace Analytical Services, Inc..

Pace Analytical®
www.pacelabs.com

Pace Analytical Services, Inc.
205 East Meadow Road - Suite A
Eden, NC 27288
(336)623-8921

Pace Analytical Services, Inc.
2225 Riverside Dr.
Asheville, NC 28804
(828)254-7176

Pace Analytical Services, Inc.
9800 Kincey Ave. Suite 100
Huntersville, NC 28078
(704)875-9092

QUALITY CONTROL DATA

Project: Belt Press Sludge 12/17
Pace Project No.: 92184330

QC Batch: MSV/25411
QC Batch Method: EPA 8260
Analysis Method: EPA 8260
Analysis Description: 8260 MSV TCLP
Associated Lab Samples: 92184330002

METHOD BLANK: 1114858
Matrix: Water
Associated Lab Samples: 92184330002

Parameter	Units	Blank Result	Reporting Limit	Analyzed	Qualifiers
1,1-Dichloroethene	ug/L	ND	5.0	12/31/13 14:58	
1,2-Dichloroethane	ug/L	ND	5.0	12/31/13 14:58	
1,4-Dichlorobenzene	ug/L	ND	5.0	12/31/13 14:58	
2-Butanone (MEK)	ug/L	ND	10.0	12/31/13 14:58	
Benzene	ug/L	ND	5.0	12/31/13 14:58	
Carbon tetrachloride	ug/L	ND	5.0	12/31/13 14:58	
Chlorobenzene	ug/L	ND	5.0	12/31/13 14:58	
Chloroform	ug/L	ND	5.0	12/31/13 14:58	
Tetrachloroethene	ug/L	ND	5.0	12/31/13 14:58	
Trichloroethene	ug/L	ND	5.0	12/31/13 14:58	
Vinyl chloride	ug/L	ND	5.0	12/31/13 14:58	
1,2-Dichloroethane-d4 (S)	%	94	70-130	12/31/13 14:58	
4-Bromofluorobenzene (S)	%	102	70-130	12/31/13 14:58	
Toluene-d8 (S)	%	99	67-135	12/31/13 14:58	

LABORATORY CONTROL SAMPLE: 1114859

Parameter	Units	Spike Conc.	LCS Result	LCS % Rec	% Rec Limits	Qualifiers
1,1-Dichloroethene	ug/L	50	53.4	107	70-141	
1,2-Dichloroethane	ug/L	50	55.7	111	70-139	
1,4-Dichlorobenzene	ug/L	50	54.0	108	70-141	
2-Butanone (MEK)	ug/L	100	115	115	63-150	
Benzene	ug/L	50	57.3	115	70-132	
Carbon tetrachloride	ug/L	50	55.2	110	70-150	
Chlorobenzene	ug/L	50	54.4	109	70-134	
Chloroform	ug/L	50	53.7	107	70-130	
Tetrachloroethene	ug/L	50	53.1	106	70-137	
Trichloroethene	ug/L	50	53.2	106	70-131	
Vinyl chloride	ug/L	50	67.2	134	56-144	
1,2-Dichloroethane-d4 (S)	%			106	70-130	
4-Bromofluorobenzene (S)	%			100	70-130	
Toluene-d8 (S)	%			98	67-135	

This report shall not be reproduced, except in full,
without the written consent of Pace Analytical Services, Inc..

Pace Analytical
www.pacelabs.com

Pace Analytical Services, Inc.
205 East Meadow Road - Suite A
Eden, NC 27288
(336)623-8921

Pace Analytical Services, Inc.
2225 Riverside Dr.
Asheville, NC 28804
(828)254-7176

Pace Analytical Services, Inc.
9800 Kincey Ave. Suite 100
Huntersville, NC 28078
(704)875-9092

QUALITY CONTROL DATA

Project: Belt Press Sludge 12/17
Pace Project No.: 92184330

QC Batch: OEXT/25401
QC Batch Method: EPA 3510
Associated Lab Samples: 92184330002

Analysis Method: EPA 8081
Analysis Description: 8081 GCS TCLP Pesticides

METHOD BLANK: 1116299
Associated Lab Samples: 92184330002

Matrix: Water

Parameter	Units	Blank Result	Reporting Limit	Analyzed	Qualifiers
Chlordane (Technical)	ug/L	ND	3.0	01/07/14 13:13	
Endrin	ug/L	ND	0.50	01/07/14 13:13	
gamma-BHC (Lindane)	ug/L	ND	0.50	01/07/14 13:13	
Heptachlor epoxide	ug/L	ND	0.50	01/07/14 13:13	
Methoxychlor	ug/L	ND	1000	01/07/14 13:13	
Toxaphene	ug/L	ND	3.0	01/07/14 13:13	
Decachlorobiphenyl (S)	%	79	10-138	01/07/14 13:13	
Tetrachloro-m-xylene (S)	%	54	10-110	01/07/14 13:13	

LABORATORY CONTROL SAMPLE: 1116300

Parameter	Units	Spike Conc.	LCS Result	LCS % Rec	% Rec Limits	Qualifiers
Endrin	ug/L	1.2	1.2	99	20-134	
gamma-BHC (Lindane)	ug/L	1.2	1.0	82	20-118	
Heptachlor epoxide	ug/L	1.2	1.1	90	22-133	
Methoxychlor	ug/L	3.7	ND	94	44-150	
Decachlorobiphenyl (S)	%			84	10-138	
Tetrachloro-m-xylene (S)	%			77	10-110	

MATRIX SPIKE & MATRIX SPIKE DUPLICATE: 1116301 1116302

Parameter	Units	92184330002 Result	MS Spike Conc.	MSD Spike Conc.	MS Result	MSD Result	MS % Rec	MSD % Rec	% Rec Limits	RPD	Qual
Endrin	ug/L	ND	1.2	1.2	1.2	1.2	95	97	21-133	2	
gamma-BHC (Lindane)	ug/L	ND	1.2	1.2	1.0	1.1	81	86	24-119	6	
Heptachlor epoxide	ug/L	ND	1.2	1.2	1.1	1.1	87	88	50-150	1	
Methoxychlor	ug/L	ND	3.7	3.7	ND	ND	91	91	50-150		
Decachlorobiphenyl (S)	%						77	79	10-138		
Tetrachloro-m-xylene (S)	%						63	68	10-110		

This report shall not be reproduced, except in full,
without the written consent of Pace Analytical Services, Inc..

Pace Analytical®
www.pacelabs.com

Pace Analytical Services, Inc.
205 East Meadow Road - Suite A
Eden, NC 27288
(336)623-8921

Pace Analytical Services, Inc.
2225 Riverside Dr.
Asheville, NC 28804
(828)254-7176

Pace Analytical Services, Inc.
9800 Kincey Ave. Suite 100
Huntersville, NC 28078
(704)875-9092

QUALITY CONTROL DATA

Project: Belt Press Sludge 12/17
Pace Project No.: 92184330

QC Batch: OEXT/15627
QC Batch Method: EPA 3510
Analysis Method: EPA 8151
Analysis Description: 8151 GCS Herbicides TCLP
Associated Lab Samples: 92184330002

METHOD BLANK: 800785
Matrix: Water
Associated Lab Samples: 92184330002

Parameter	Units	Blank Result	Reporting Limit	Analyzed	Qualifiers
2,4,5-TP (Silvex)	mg/L	ND	0.010	01/07/14 00:42	
2,4-D	mg/L	ND	0.010	01/07/14 00:42	
2,4-DCAA (S)	%	121	70-130	01/07/14 00:42	

LABORATORY CONTROL SAMPLE: 800786

Parameter	Units	Spike Conc.	LCS Result	LCS % Rec	% Rec Limits	Qualifiers
2,4,5-TP (Silvex)	mg/L	.012	0.014	114	47-146	
2,4-D	mg/L	.06	0.066	111	50-130	
2,4-DCAA (S)	%			104	70-130	

MATRIX SPIKE & MATRIX SPIKE DUPLICATE: 800787 800788

Parameter	Units	92184330002 Result	MS Spike Conc.	MSD Spike Conc.	MS Result	MSD Result	MS % Rec	MSD % Rec	% Rec Limits	RPD	Qual
2,4,5-TP (Silvex)	mg/L	ND	.0541	.0541	0.060	.041J	111	76	47-146		
2,4-D	mg/L	ND	.271	.271	0.30	0.20	105	70	50-130	38	
2,4-DCAA (S)	%						107	79	70-130		

This report shall not be reproduced, except in full,
without the written consent of Pace Analytical Services, Inc..

Pace Analytical
www.pacelabs.com

Pace Analytical Services, Inc.
205 East Meadow Road - Suite A
Eden, NC 27288
(336)623-8921

Pace Analytical Services, Inc.
2225 Riverside Dr.
Asheville, NC 28804
(828)254-7176

Pace Analytical Services, Inc.
9800 Kincey Ave. Suite 100
Huntersville, NC 28078
(704)875-9092

QUALITY CONTROL DATA

Project: Belt Press Sludge 12/17
Pace Project No.: 92184330

QC Batch: OEXT/25400
QC Batch Method: EPA 3510
Associated Lab Samples: 92184330002

Analysis Method: EPA 8270
Analysis Description: 8270 TCLP MSSV

METHOD BLANK: 1116295
Associated Lab Samples: 92184330002

Matrix: Water

Parameter	Units	Blank Result	Reporting Limit	Analyzed	Qualifiers
1,4-Dichlorobenzene	ug/L	ND	50.0	01/06/14 16:30	
2,4,5-Trichlorophenol	ug/L	ND	50.0	01/06/14 16:30	
2,4,6-Trichlorophenol	ug/L	ND	50.0	01/06/14 16:30	
2,4-Dinitrotoluene	ug/L	ND	50.0	01/06/14 16:30	
2-Methylphenol(o-Cresol)	ug/L	ND	50.0	01/06/14 16:30	
3&4-Methylphenol(m&p Cresol)	ug/L	ND	50.0	01/06/14 16:30	
Hexachloro-1,3-butadiene	ug/L	ND	50.0	01/06/14 16:30	
Hexachlorobenzene	ug/L	ND	50.0	01/06/14 16:30	
Hexachloroethane	ug/L	ND	50.0	01/06/14 16:30	
Nitrobenzene	ug/L	ND	50.0	01/06/14 16:30	
Pentachlorophenol	ug/L	ND	100	01/06/14 16:30	
Pyridine	ug/L	ND	50.0	01/06/14 16:30	
2,4,6-Tribromophenol (S)	%	73	27-108	01/06/14 16:30	
2-Fluorobiphenyl (S)	%	75	13-107	01/06/14 16:30	
2-Fluorophenol (S)	%	44	10-110	01/06/14 16:30	
Nitrobenzene-d5 (S)	%	70	12-102	01/06/14 16:30	
Phenol-d6 (S)	%	32	10-110	01/06/14 16:30	
Terphenyl-d14 (S)	%	91	21-132	01/06/14 16:30	

LABORATORY CONTROL SAMPLE: 1116296

Parameter	Units	Spike Conc.	LCS Result	LCS % Rec	% Rec Limits	Qualifiers
1,4-Dichlorobenzene	ug/L	500	327	65	10-110	
2,4,5-Trichlorophenol	ug/L	500	466	93	39-108	
2,4,6-Trichlorophenol	ug/L	500	399	80	40-104	
2,4-Dinitrotoluene	ug/L	500	538	108	42-109	
2-Methylphenol(o-Cresol)	ug/L	500	354	71	31-110	
3&4-Methylphenol(m&p Cresol)	ug/L	500	300	60	30-110	
Hexachloro-1,3-butadiene	ug/L	500	322	64	10-110	
Hexachlorobenzene	ug/L	500	378	76	39-121	
Hexachloroethane	ug/L	500	312	62	10-110	
Nitrobenzene	ug/L	500	403	81	32-101	
Pentachlorophenol	ug/L	1000	813	81	18-108	
Pyridine	ug/L	500	199	40	10-110	
2,4,6-Tribromophenol (S)	%			90	27-108	
2-Fluorobiphenyl (S)	%			82	13-107	
2-Fluorophenol (S)	%			49	10-110	
Nitrobenzene-d5 (S)	%			78	12-102	
Phenol-d6 (S)	%			38	10-110	
Terphenyl-d14 (S)	%			92	21-132	

This report shall not be reproduced, except in full,
without the written consent of Pace Analytical Services, Inc..

Pace Analytical®
www.pacelabs.com

Pace Analytical Services, Inc.
205 East Meadow Road - Suite A
Eden, NC 27288
(336)623-8921

Pace Analytical Services, Inc.
2225 Riverside Dr.
Asheville, NC 28804
(828)254-7176

Pace Analytical Services, Inc.
9800 Kincey Ave. Suite 100
Huntersville, NC 28078
(704)875-9092

QUALITY CONTROL DATA

Project: Belt Press Sludge 12/17
Pace Project No.: 92184330

MATRIX SPIKE & MATRIX SPIKE DUPLICATE: 1116297 / 1116298

Parameter	Units	92184187001 Result	MS Spike Conc.	MSD Spike Conc.	MS Result	MSD Result	MS % Rec	MSD % Rec	% Rec Limits	RPD	Qual
1,4-Dichlorobenzene	ug/L	ND	500	500	147	209	29	42	30-150	35	M1,R1
2,4,5-Trichlorophenol	ug/L	ND	500	500	299	331	60	66	30-150	10	
2,4,6-Trichlorophenol	ug/L	ND	500	500	253	264	51	53	30-150	4	
2,4-Dinitrotoluene	ug/L	ND	500	500	353	450	71	90	30-150	24	
2-Methylphenol(o-Cresol)	ug/L	ND	500	500	249	251	50	50	30-150	1	
3&4-Methylphenol(m&p Cresol)	ug/L	ND	500	500	241	238	48	48	30-150	1	
Hexachloro-1,3-butadiene	ug/L	ND	500	500	141	193	28	39	30-150	31	M1,R1
Hexachlorobenzene	ug/L	ND	500	500	255	318	51	64	30-150	22	
Hexachloroethane	ug/L	ND	500	500	128	193	26	39	30-150	40	M1,R1
Nitrobenzene	ug/L	ND	500	500	214	271	43	54	30-150	23	
Pentachlorophenol	ug/L	ND	1000	1000	620	765	62	77	30-150	21	
Pyridine	ug/L	ND	500	500	ND	82.3	0	16	30-150		M1
2,4,6-Tribromophenol (S)	%						63	82	27-108		
2-Fluorobiphenyl (S)	%						48	49	13-107		
2-Fluorophenol (S)	%						27	35	10-110		
Nitrobenzene-d5 (S)	%						39	50	12-102		
Phenol-d6 (S)	%						27	32	10-110		
Terphenyl-d14 (S)	%						70	84	21-132		

This report shall not be reproduced, except in full, without the written consent of Pace Analytical Services, Inc..

Pace Analytical
www.pacelabs.com

Pace Analytical Services, Inc.
205 East Meadow Road - Suite A
Eden, NC 27288
(336)623-8921

Pace Analytical Services, Inc.
2225 Riverside Dr.
Asheville, NC 28804
(828)254-7176

Pace Analytical Services, Inc.
9800 Kincey Ave. Suite 100
Huntersville, NC 28078
(704)875-9092

QUALITY CONTROL DATA

Project: Belt Press Sludge 12/17
Pace Project No.: 92184330

QC Batch: PMST/6128
QC Batch Method: ASTM D2974-87
Analysis Method: ASTM D2974-87
Analysis Description: Dry Weight/Percent Moisture
Associated Lab Samples: 92184330002

SAMPLE DUPLICATE: 1114998

Parameter	Units	5091530001 Result	Dup Result	RPD	Qualifiers
Percent Moisture	%	15.8	15.1	5	

SAMPLE DUPLICATE: 1114999

Parameter	Units	92184658022 Result	Dup Result	RPD	Qualifiers
Percent Moisture	%	47.7	47.5	0	

This report shall not be reproduced, except in full,
without the written consent of Pace Analytical Services, Inc..

Pace Analytical
www.pacelabs.com

Pace Analytical Services, Inc.
205 East Meadow Road - Suite A
Eden, NC 27288
(336)623-8921

Pace Analytical Services, Inc.
2225 Riverside Dr.
Asheville, NC 28804
(828)254-7176

Pace Analytical Services, Inc.
9800 Kincey Ave. Suite 100
Huntersville, NC 28078
(704)875-9092

QUALITY CONTROL DATA

Project: Belt Press Sludge 12/17
Pace Project No.: 92184330

QC Batch: WET/28783
QC Batch Method: EPA 9095
Analysis Method: EPA 9095
Analysis Description: 9095 PAINT FILTER LIQUID TEST
Associated Lab Samples: 92184330002

SAMPLE DUPLICATE: 1112343

Parameter	Units	92182760001 Result	Dup Result	RPD	Qualifiers
Free Liquids		Pass	Pass		

This report shall not be reproduced, except in full,
without the written consent of Pace Analytical Services, Inc..

Pace Analytical
www.pacelabs.com

Pace Analytical Services, Inc.
205 East Meadow Road - Suite A
Eden, NC 27288
(336)623-8921

Pace Analytical Services, Inc.
2225 Riverside Dr.
Asheville, NC 28804
(828)254-7176

Pace Analytical Services, Inc.
9800 Kincey Ave. Suite 100
Huntersville, NC 28078
(704)875-9092

QUALIFIERS

Project: Belt Press Sludge 12/17
Pace Project No.: 92184330

DEFINITIONS

DF - Dilution Factor, if reported, represents the factor applied to the reported data due to changes in sample preparation, dilution of the sample aliquot, or moisture content.

ND - Not Detected at or above adjusted reporting limit.

J - Estimated concentration above the adjusted method detection limit and below the adjusted reporting limit.

MDL - Adjusted Method Detection Limit.

PRL - Pace Reporting Limit.

RL - Reporting Limit.

S - Surrogate

1,2-Diphenylhydrazine (8270 listed analyte) decomposes to Azobenzene.

Consistent with EPA guidelines, unrounded data are displayed and have been used to calculate % recovery and RPD values.

LCS(D) - Laboratory Control Sample (Duplicate)

MS(D) - Matrix Spike (Duplicate)

DUP - Sample Duplicate

RPD - Relative Percent Difference

NC - Not Calculable.

SG - Silica Gel - Clean-Up

U - Indicates the compound was analyzed for, but not detected.

N-Nitrosodiphenylamine decomposes and cannot be separated from Diphenylamine using Method 8270. The result reported for each analyte is a combined concentration.

Acid preservation may not be appropriate for 2-Chloroethylvinyl ether, Styrene, and Vinyl chloride.

Pace Analytical is TNI accredited. Contact your Pace PM for the current list of accredited analytes.

TNI - The NELAC Institute.

LABORATORIES

PASI-A	Pace Analytical Services - Asheville
PASI-C	Pace Analytical Services - Charlotte
PASI-O	Pace Analytical Services - Ormond Beach

ANALYTE QUALIFIERS

1g	8260 results are from a total analysis which show that analytes are not present or that they are present but at such low levels that the appropriate regulatory levels could not possibly be exceeded, per Section 1.2 of Method 1311.
M1	Matrix spike recovery exceeded QC limits. Batch accepted based on laboratory control sample (LCS) recovery.
R1	RPD value was outside control limits.

This report shall not be reproduced, except in full,
without the written consent of Pace Analytical Services, Inc..

Pace Analytical®
www.pacelabs.com

Pace Analytical Services, Inc.
205 East Meadow Road - Suite A
Eden, NC 27288
(336)623-8921

Pace Analytical Services, Inc.
2225 Riverside Dr.
Asheville, NC 28804
(828)254-7176

Pace Analytical Services, Inc.
9800 Kincey Ave. Suite 100
Huntersville, NC 28078
(704)875-9092

QUALITY CONTROL DATA CROSS REFERENCE TABLE

Project: Belt Press Sludge 12/17
Pace Project No.: 92184330

Lab ID	Sample ID	QC Batch Method	QC Batch	Analytical Method	Analytical Batch
92184330002	**BELT PRESS SLUDGE CAKE**	EPA 3510	OEXT/25401	EPA 8081	GCSV/16375
92184330002	**BELT PRESS SLUDGE CAKE**	EPA 3510	OEXT/15627	EPA 8151	GCSV/10331
92184330002	**BELT PRESS SLUDGE CAKE**	EPA 3010	MPRP/14963	EPA 6010	ICP/13588
92184330002	**BELT PRESS SLUDGE CAKE**	EPA 7470	MERP/5997	EPA 7470	MERC/5794
92184330002	**BELT PRESS SLUDGE CAKE**	EPA 3510	OEXT/25400	EPA 8270	MSSV/8623
92184330002	**BELT PRESS SLUDGE CAKE**	EPA 8260	MSV/25411		
92184330002	**BELT PRESS SLUDGE CAKE**	ASTM D2974-87	PMST/6128		
92184330002	**BELT PRESS SLUDGE CAKE**	SM 2540G	WET/28906		
92184330002	**BELT PRESS SLUDGE CAKE**	EPA 9095	WET/28783		

This report shall not be reproduced, except in full,
without the written consent of Pace Analytical Services, Inc..

Pace Analytical®
www.pacelabs.com

CHAIN-OF-CUSTODY / Analytical Request Document

The Chain-of-Custody is a LEGAL DOCUMENT. All relevant fields must be completed accurately.

Page: 1 of 1

1724073

Section A Required Client Information:

Company: Town of Orange WWTP
Address: 13222 Spicers Mill Rd. Orange, VA 22960
Email To: 540-672-3112
Phone: [redacted] Fax: 540-672-6490
Requested Due Date/TAT:

Section B Required Project Information:

Report To: Michelle Steinburger
Copy To:
Purchase Order No.:
Project Name:
Project Number:

Section C Invoice Information:

Attention:
Company Name:
Address:
Pace Quote Reference:
Pace Project Manager:
Pace Profile #:

REGULATORY AGENCY

☒ NPDES ☐ GROUND WATER ☐ DRINKING WATER
☐ UST ☐ RCRA ☐ OTHER _____

Site Location STATE: VA

Section D Required Client Information

Matrix Codes MATRIX / CODE: Drinking Water DW, Water WT, Waste Water WW, Product P, Soil/Solid SL, Oil OL, Wipe WP, Air AR, Tissue TS, Other OT

SAMPLE ID (A-Z, 0-9 / ,-) Sample IDs MUST BE UNIQUE

Requested Analysis Filtered (Y/N): Y/N N N N

ITEM #	SAMPLE ID	MATRIX CODE (see valid codes to left)	SAMPLE TYPE (G=GRAB C=COMP)	COLLECTED COMPOSITE START DATE	COLLECTED COMPOSITE START TIME	COLLECTED COMPOSITE END/GRAB DATE	COLLECTED COMPOSITE END/GRAB TIME	SAMPLE TEMP AT COLLECTION	# OF CONTAINERS	Unpreserved	H_2SO_4	HNO_3	HCl	NaOH	$Na_2S_2O_3$	Methanol	Other	Analysis Test: Full TCLP	% Solids	Paint Filter	Residual Chlorine (Y/N)	Pace Project No./Lab I.D. 92154330
1	Belt Press Sludge Cake	SL	G			12/17/13	855	13°	2	X								X	X	X	N	92154330001
2																						
3																						
4																						
5																						
6																						
7																						
8																						
9																						
10																						
11																						
12																						

ADDITIONAL COMMENTS	RELINQUISHED BY / AFFILIATION	DATE	TIME	ACCEPTED BY / AFFILIATION	DATE	TIME	SAMPLE CONDITIONS			
	[signature]	12/17/13	9:31	Joseph Sloe	12/19/13	1230	NA	N	N	Y

ORIGINAL

SAMPLER NAME AND SIGNATURE
PRINT Name of SAMPLER: Jesse Redmon
SIGNATURE of SAMPLER: [signature]
DATE Signed (MM/DD/YY): 12/17/13

Temp in °C | Received on Ice (Y/N) | Custody Sealed Cooler (Y/N) | Samples Intact (Y/N)

*Important Note: By signing this form you are accepting Pace's NET 30 day payment terms and agreeing to late charges of 1.5% per month for any invoices not paid within 30 days.