VPDES PERMIT FACT SHEET

This document gives pertinent information concerning the reissuance of the VPDES permit listed below. This permit is being processed as a minor, municipal permit. The effluent limitations contained in this permit will maintain the Water Quality Standards 9 VAC 25-260-10 et.seq. The discharge is a result of the operation of a municipal wastewater treatment plant treating sewage originating from a convalescent care facility. This permit action includes revised effluent limitations and special conditions in the permit.

1. Facility Name and Location Address: Mizpah Nursing Home, Inc. Wastewater Treatment Plant (WWTP)
74 Mizpah Road
Locust Hill, VA 23092

Mailing Address: P.O. Box 70
Locust Hill, VA 23092

Facility Contact: J.D. Davis, Operator
Telephone: (804) 758-5260
Email: JDavis@va.metrocast.net

Facility Owner: Mizpah Nursing Home, Inc.
Owner Contact: Myrtle D. Faulkner, Executive Administrator
Mailing Address: Same as facility
Telephone: (804) 758-5267

2. SIC Code(s): 4952 - Sewerage Systems
8051 – Skilled Nursing Care Facilities

3. Permit No. VA0063029 Permit Expiration Date: September 28, 2013

4. Application Complete Date: Date: January 16, 2013
Permit Drafted By: Jeremy Kazio Date: January 22, 2013

DEQ Regional Office: Piedmont Regional Office

Reviewed By: Jaime Bauer Date: January 28, 2013
Curt Linderman Date: March 5, 2013, March 22, 2013

5. Receiving Stream:

Name:	Rappahannock River
River Mile:	3-RRP013.77
Basin:	Rappahannock River
Subbasin:	N/A
Section:	1
Class:	II
Special Standards:	a

Tidal? YES – Statistical low flows not applicable to tidal receiving waters

Tidal dilution ratios used:

Acute Toxicity:	2:1	(mixing zone = 1 part receiving water, 1 part effluent)
Chronic Toxicity:	50:1	(mixing zone = 49 parts receiving water, 1 part effluent)
Human Health:	50:1	(mixing zone = 49 parts receiving water, 1 part effluent)

On 303(d) list? YES

See **Attachment A** for 01/02/2013 Flow Frequency Memorandum by J.Palmore, P.G.

6. Operator License Requirements: Class IV
The recommended attendance hours by a licensed operator and the minimum daily hours that the treatment works should be manned by operating staff are contained in the Sewage Collections and Treatment Regulations (SCAT) 9 VAC 25-790-300.

7. Reliability Class: Class I
Reliability is a measurement of the ability of a component or system to perform its designated function without failure or interruption of service. The reliability classification is based on the water quality and public health consequences of a component or system failure. The permittee is required to maintain Class I Reliability for this facility.

8. Permit Characterization:

	Issuance	X	Existing Discharge
X	Reissuance		Proposed Discharge
	Revoke & Reissue	X	Effluent Limited
	Owner Modification	X	Water Quality Limited
	Board Modification		WET Limit
	Change of Ownership/Name	X	Interim Limits in Permit
	Effective Date:		Interim Limits in Other Document (attached)
X	Municipal	X	Compliance Schedule Required
	SIC Code(s): 4952, 8051		Site Specific WQ Criteria
	Industrial		Variance to WQ Standards
	SIC Code(s):		Water Effects Ratio
	POTW	X	Discharge to 303(d) Listed Segment
X	PVOTW		Toxics Management Program Required
X	Private		Toxics Reduction Evaluation
	Federal		Possible Interstate Effect
	State		Storm Water Management Plan

9. Wastewater Flow and Treatment:

Table 1: Wastewater Flow and Treatment

Outfall Number	Wastewater Source	Treatment	Design Flow
001	Bathrooms and food preparation areas within a convalescent care center with an approximate population of 150 persons	Bar screen, flow divider, 4X aeration units, 2X clarification units, chlorination, dechlorination, sludge wasting and holding chamber	20,000 gpd (0.020 MGD)

Please see **Attachment B** for facility flow diagram and operator's description of the treatment plant.

10 Sludge Disposal: Waste sludge is retained in a holding tank and is transported to R&R Treatment Plant, Inc. by Brownley Septic Service. R&R Treatment Plant, Inc. is located at 5542 Pampa Road in Gloucester, Virginia. Please see **Attachment B** for sludge haul route.

11. Discharge Location Description: This facility discharges to the Rappahannock River in Locust Hill, VA.

Name of USGS topo map: Saluda – 123D (See **Attachment C** for aerial photo)

12. Material Storage: Chemicals used for the wastewater treatment plant are required to be handled in such a manner so as not to permit a discharge of those chemicals in accordance with Part I.C.8 of the 2013 permit.

13. Ambient Water Quality Information:
Ambient water quality information was derived from data obtained from monitoring station 3-RPP010.60. Monitoring station 3-RPP010.60 is located on the Rappahannock River off of Orchard Point and is approximately 3.11 miles downstream of the outfall. Please see Item 16 of this fact sheet for further information regarding how the data were used for 2013 permit development.

14. Antidegradation Review and Comments:
The State Water Control Board's Water Quality Standards includes an antidegradation policy (9 VAC 25-260-30). All state surface waters are provided one of three levels of antidegradation protection. For Tier 1 or existing use protection, existing uses of the water body and the water quality to protect those uses must be maintained. Tier 2 water bodies have water quality that is better than the water quality standards. Significant lowering of the water quality of Tier 2 waters is not allowed without an evaluation of the economic and social impacts. Tier 3 water bodies are exceptional waters and are so designated by regulatory amendment. The antidegradation policy prohibits new or expanded discharges into exceptional waters.

The antidegradation review begins with a Tier determination. The section of the Rappahannock River receiving this facility's discharge is considered to be a Tier 1 water due to the estuarine benthic impairment (See **Attachment A** for Flow Frequency Analysis by J.Palmore dated 01/02/2013 and Item 25 of this fact sheet for more detailed impairment information).

15. Site Inspection: By Heather Diehls/Meredith Williams on January 9, 2013. (See **Attachment D**)

16. Effluent Limitation Development:

Table 2 –Basis for 2013 Permit Limitations

PARAMETER	BASIS FOR EFFLUENT LIMITS	DISCHARGE LIMITATIONS						MONITORING REQUIREMENTS	
		MONTHLY AVERAGE		WEEKLY AVERAGE		MINIMUM	MAXIMUM	FREQUENCY	SAMPLE TYPE
Flow (MGD)	NA	NL		NA		NA	NL	1/Day	Estimate
pH	1,3	NA		NA		6.0 SU	9.0 SU	1/Day	Grab
BOD_5	2, 3	30 mg/L	2300 g/d	45 mg/L	3400 g/d	NA	NA	1/Month	Grab
Total Suspended Solids (TSS)	2, 3	30 mg/L	2300 g/d	45 mg/L	3400 g/d	NA	NA	1/Month	Grab
Ammonia as N (interim)	1	4.5 mg/L		4.5 mg/L		NA	NA	1/Month	Grab
Ammonia as N (final)	1	2.96 mg/L		2.96 mg/L		NA	NA	1/Month	Grab
Total Residual Chlorine (TRC)	1	13 µg/L		16 µg/L		NA	NA	1/Day	Grab
Dissolved Oxygen (DO)	2	NA		NA		5.0 mg/L	NA	1/Day	Grab
Fecal Coliform	2	200 N / 100 mL (Geometric Mean)		NA		NA	NL	4/Month (between 10am and 4pm)	Grab
Enterococci	1	35 N / 100 mL (Geometric Mean)		NA		NA	NL	4/Month (between 10am and 4pm)	Grab

1. Water Quality Standards (9 VAC 25-260)
2. Best Engineering Judgment (BEJ)

Water Quality Standards**:**

pH: A pH limitation of 6.0 to 9.0 standard units is assigned to all discharges into Class II Estuarine Waters in accordance with the Water Quality Standards (WQS), 9 VAC 25-260-50, and federal secondary treatment standard guidelines.

Total Residual Chlorine (TRC) and Ammonia as N: If it is feasible that a specific pollutant for which in-stream criteria are given in the *Virginia Water Quality Standards* (9 VAC 25-260 et.seq.) may exist in the facility's effluent, a Reasonable Potential Analysis must be conducted in order to determine if it is statistically probable that the permittee's future discharge may contain that pollutant in concentrations which are harmful to aquatic life and/or human health within the receiving stream. The first step of the analysis is to calculate the pollutant's acute and chronic wasteload allocations (WLA's), which are defined as the pollutant concentration that may be discharged by the facility over specific periods of time which will maintain the in-stream criteria referenced above. The WLA's are determined using a DEQ-sourced Excel spreadsheet called MSTRANTI, which requires inputs representing site specific data for critical flows, dilution, mixing, and water quality for both the receiving stream and the effluent. After the WLA's are calculated, a desktop computer application called STATS is utilized to determine if future pollutant concentrations may exceed the WLA's. The STATS application derives lognormal distributions from the WLAs as well as the effluent data. If the acute (1-day) or chronic (4-day or 30-day) 97th percentile of the effluent distribution exceeds the respective acute or chronic WLA, a limitation is deemed to be necessary. The limitation is equal to the concentration expected to be observed at the proposed limitation monitoring frequency within the most protective projected WLA distribution.

The inputs required by MSTRANTI for critical ambient water quality for this facility were calculated using data from monitoring station 3-RPP010.60 (see **Attachment E**). Please see Table 3 below for specific inputs.

Table 3: MSTRANTI Source Data

			Temp. (°C)	pH (SU)	Salinity (g/kg)	Hardness (mg/L as $CaCO_3$)
Ambient Inputs (Attachment E)	3-RPP010.60: (July 1984 – December 2012)	90th Percentile	27	8.2		N/A for Saltwater Discharges
		10th Percentile	5.6	7.4		
		Average			16.0	
Effluent Inputs (Attachment E)	Monthly bench sheets submitted by the permittee for the 2012 calendar year	90th Percentile	27			
	DMR data reported between October 2008 – November 2012	90th Percentile		8.67		
		10th Percentile		8.11		
Tidal Dilution Ratios (Attachment A)	Tidal 'defaults' used in accordance with GM00-2011 (Pg. 30), as recommended in 01/02/2013 Flow Frequency Analysis by J.Palmore, P.G.					

For Ammonia and Total Residual Chlorine, GM 00-2011 requires that values of 9.0 mg/L and 20 mg/L, respectively, be entered into STATS as effluent data in order to bypass the program's Reasonable Potential Analysis because these pollutants are either purposely introduced or known to exist in this facility's effluent.

The Ammonia limitation evaluation indicated that a more stringent limitation of 2.96 mg/L is needed to maintain Water Quality Standards in the receiving stream. The more stringent limitation is due to higher effluent and ambient pH values, and a higher effluent temperature value. The permittee has been granted a 2-year compliance schedule to meet this new limitation. During the interim, the 2008 Ammonia as N limitation (4.5 mg/L) will apply until the final limitation becomes effective.

The TRC limitation evaluation indicated that the 2008 permit limitations are adequately protective of Water Quality Standards. Please note that the wasteload allocations entered into STATS for the TRC limitation evaluation are for Chlorine Produced Oxidants (CPO). Chlorinated effluents discharged to salt water react to produce chlorine produced oxidants that have a toxic impact similar

to TRC in freshwater. It is assumed that CPO in salt water receiving streams is controlled by the effluent TRC limit and are therefore interchangeable.

Please see **Attachment F** for the 2013 and 2008 MSTRANTI and STATS printouts.

Enterococci: The limitation for Enterococci is expected to protect the primary contact recreation use bacteria criteria outlined in 9 VAC 25-260-170 (Water Quality Standards). The primary contact recreation bacterial in-stream criteria for protection of saltwater is 35N/100 mL colony forming units (CFU) of Enterococci bacteria is based on a monthly geometric mean resulting from at least 4 weekly samples.

Best Engineering Judgment:

DO: The DO limitation of a minimum 5.0 mg/L is based on Best Engineering Judgment. The 2008 permit included a minimum limitation of 5.0 mg/L as BEJ in order to address low DO concentrations observed in the Rappahannock River mesohaline estuary during the 2006 305(b)/303(d) Water Quality Assessments Cycle. Although the segment met all measured DO criteria in the 2012 305(b)/303(d) Water Quality Assessments Cycle, it is still considered to be impaired due to EPA policy. Therefore, it is staff's Best Engineering Judgment that the limitation be carried forward to the 2013 permit in order to continue to protect water quality and to help ensure that the permittee neither causes nor contributes to any potential issolved oxygen impairments in the future.

BOD_5 and TSS: 40 CFR Part 133 specifies technology-based limits for the minimum level of treatment that must be met through the application of secondary treatment. In general the discharge must fall within the pH range of 6.0 SU and 9.0 SU and meet BOD_5 and TSS limits of 30 mg/l monthly average and 45 mg/l weekly average. These limitations represent the minimum effluent quality required of all PVOTWs. Additionally, the guidelines require 85% removal for BOD_5 and TSS, pertaining to the monthly average concentration.

Fecal Coliform: For sewage discharges that may reach shellfish waters, permits limit fecal coliform with an effluent limit of 200 colony forming units per 100 milliliters, applied as a monthly geometric mean. Although the Water Quality Standards have been amended to remove the reference to this effluent limit in shellfish waters, the Virginia Department of Health, Bureau of Shellfish Sanitation still uses fecal coliform as an indicator for determining the quality of shellfish waters, and it is necessary to ensure discharges meet this level. Since it has historically maintained the in-stream water quality criteria for fecal coliform of 14/43 per 100 milliliters, the 200 per 100 milliliters effluent limit will be used in shellfish waters in order to continue meeting the in-stream criteria and for protection of shellfish under the general standard.

17. Basis for Sludge Use & Disposal Requirements: Not applicable, as this facility will not land apply sludge.

18. Antibacksliding: All limitations in the 2013 permit reissuance are the same as or more stringent than the limitations in the 2008 permit.

19. Special Conditions:

Part I.B. - Additional TRC Limitations and Monitoring Requirements

Rationale: Required by Sewage Collection and Treatment Regulations, 9VAC25-790 and Water Quality Standards 9VAC25-260-170, Bacteria; Other Recreational Waters. Also, 40 CFR 122.41(e) requires the permittee, at all times, to properly operate and maintain all facilities and systems of treatment in order to comply with the permit. This ensures proper operation of chlorination equipment to maintain adequate disinfection.

Part I.C – Other Requirements or Special Condtions

a. Special Condition C.1 – 95% Capacity Reopener
Rationale: Required by VPDES Permit Regulation, 9 VAC 25-31-200 B 4 for all POTW and PVOTW permits.

b. Special Condition C.2 – Operations and Maintenance Manual Requirement
Rationale: Required by Code of Virginia §62.1-44.19; Sewage Collection and Treatment Regulations, 9 VAC 25-790; VPDES Permit Regulation, 9 VAC 25-31-190 E.

c. Special Condition C.3 – Licensed Operator Requirement
Rationale: The VPDES Permit Regulation, 9 VAC 25-31-200 C and the Code of Virginia § 54.1-2300 et seq., Rules and Regulations for Waterworks and Wastewater Works Operators and Onsite Sewage System Professionals (18 VAC 160-20-10 et seq.), require licensure of operators.

d. Special Condition C.4 – Reliability Class
Rationale: Required by Sewage Collection and Treatment Regulations, 9 VAC 25-790 for all municipal facilities.

e. Special Condition C.5 – Sludge Use and Disposal
Rationale: VPDES Permit Regulation, 9 VAC 25-31-100 P; 220 B 2, and 420 through 720; and 40 CFR Part 503 require all treatment works treating domestic sewage to submit information on sludge use and disposal practices and to meet specified standards for sludge use and disposal.

f. Special Condition C.6 – Sludge Reopener
Rationale: Required by VPDES Permit Regulation 9 VAC 25-31-220 C for all permits issued to treatment works treating domestic sewage.

g. Special Condition C.7 – Compliance Reporting
Rationale: Authorized by VPDES Permit Regulation, 9 VAC 25-31-190 J 4 and 220 I. This condition is necessary when pollutants are monitored by the permittee and a maximum level of quantification and/or a specific analytical method is required in order to assess compliance with a permit limitation or to compare effluent quality with a numeric criterion. The condition also establishes protocols for calculation of reported values. The minimum quantification levels specified in this special condition are equal to those recommend in GM10-2003 (MN-3, Pg. 14) except for the BOD_5 QL, which is consistent with recently adopted VPDES General Permit regulations.

h. Special Condition C.8 – Materials Storage and Handling
Rationale: 9 VAC 25-31-50 A prohibits the discharge of any wastes into State waters unless authorized by permit. Code of Virginia §62.1-44.16 and 62.1-44.17 authorizes the Board to regulate the discharge of industrial waste or other waste.

i. Special Condition C.9 - Total Maximum Daily Load (TMDL) / Nutrient Reopener
Rationale: Section 303(d) of the Clean Water Act requires that Total Maximum Daily Loads (TMDLs) be developed for streams listed as impaired. This special condition is to allow the permit to be reopened if necessary to bring it into compliance with any applicable TMDL approved for the receiving stream. The re-opener recognizes that, according to Section 402(o)(1) of the Clean Water Act, limits and/or conditions may be either more or less stringent than those contained in this permit. Specifically, they can be relaxed it they are the result of a TMDL, basin plan, or other wasteload allocation prepared under section 303 of the Act. 9 VAC 25-40-70 A authorizes DEQ to include technology-based annual concentration limits in the permits of facilities that have installed nutrient control equipment, whether by new construction, expansion or upgrade. 9 VAC 25-31-390 A authorizes DEQ to modify VPDES permits to promulgate amended water quality standards.

j. Special Condition C.10—Indirect Dischargers

Rationale: Required by VPDES Permit Regulation, 9 VAC 25-31-200 B.1 & B.2 for POTWs and PVOTWs that receive waste from someone other than the owner of the treatment works.

k. Special Condition C.11 – CTC, CTO Requirement
Rationale: Required by Code of Virginia § 62.1-44.19; Sewage Collection and Treatment Regulations, 9 VAC 25-790-50. 9 VAC 25-40-70.A authorizes DEQ to include technology-based annual concentration limits in the permits of facilities that have installed nutrient control equipment, whether by new construction, expansion or upgrade.

l. Special Condition C.12 - Treatment Works Closure Plan
Rationale: §62.1-44.19 of the State Water Control Law. This condition establishes the requirement to submit a closure plan for the wastewater treatment facility if the treatment facility is being replaced or is expected to close.

m. Special Condition C. 13 – Schedule of Compliance
Rationale: The VPDES Permit Regulation at 9 VAC 25-31-250 allows for schedules that will lead to compliance with the Clean Water Act, the State Water Control Law, and regulations promulgated under them.

20. Part II, Conditions Applicable to All VPDES Permits
The VPDES Permit Regulation at 9 VAC 25-31-190 requires all VPDES permits to contain or specifically cite the conditions listed.

21. Changes to 2008 Permit: The tables below represent a summary of the limitations and monitoring requirements changes to the 2008 permit.

(continued on next page . . .)

Table 4: Changes to Limitations and Monitoring (Part I.A.)

PARAMETER	DISCHARGE LIMITATIONS								MONITORING REQUIREMENTS				Reason for Change
	MONTHLY AVERAGE		WEEKLY AVERAGE		MINIMUM		MAXIMUM		FREQUENCY		SAMPLE TYPE		
	From	To	From	To	From	To	From	To	From	To	From	To	
Flow (MGD)	NL	No Change	NA	No Change	NA	No Change	NL	No Change	1/Day	1 per Day	Estimate	No Change	Monitoring frequencies for BOD5 and TSS reverted to baseline because the permittee received a Warning Letter within 3 years preceding this permit reissuance. Please see Item 26 of this fact sheet for more information. Expression of monitoring frequency changed according to regional preference.
pH	NA	No Change	NA	No Change	6.0 SU	No Change	9.0 SU	No Change	1/Day	1 per Day	Grab	No Change	
BOD_5	30 mg/L	No Change	45 mg/L	No Change	NA	No Change	NA	No Change	1/ 6 Months	1 per Month	Grab	No Change	
	2300 g/d	No Change	3400 g/d	No Change									
Total Suspended Solids (TSS)	30 mg/L	No Change	45 mg/L	No Change	NA	No Change	NA	No Change	1/ 3 Montsh	1 per Month	Grab	No Change	
	2300 g/d	No Change	3400 g/d	No Change									
Ammonia as N	4.5 mg/L	2.96 mg/L	4.5 mg/L	2.96 mg/L	NA	No Change	NA	No Change	1/Month	1 per Month	Grab	No Change	Please see Item 16 of this fact sheet for Water Quality Based Effluent Limitation Analysis. The new Ammonia limitation reflects the concentration necessary to maintain compliance with the Water Quality Standards. The TRC limitation is expressed in µg/L rather than mg/L for clarity purposes. Expression of monitoring frequency changed according to regional preference.
Total Residual Chlorine (TRC)	0.013 mg/L	13 µg/L	0.016 mg/L	16 µg/L	NA	No Change	NA	No Change	1/Day	1 per Day	Grab	No Change	
Dissolved Oxygen (DO)	NA	No Change	NA	No Change	5.0 mg/L	No Change	NA	No Change	1/Day	1 per Day	Grab	No Change	Expression of monitoring frequency changed according to regional preference.
Fecal Coliform	200 N/100 mL (Geometric Mean)	No Change	NA	No Change	NA	No Change	NL	No Change	2/Month (between 10am and 4pm)	4 per Month (between 10am and 4pm)	Grab	No Change	Monitoring frequencies revised to reflect those required in GM10-2003. Expression of monitoring frequency changed according to regional preference.
Enterococci	35 N/100 mL (Geometric Mean)	No Change	NA	No Change	NA	No Change	NL	No Change	2/Month (between 10am and 4pm)	4 per Month (between 10am and 4pm)	Grab	No Change	

Table 5: Other Changes to 2008 Permit

	From	To	Permit Section Changed	Reason for Change	Date
Changes to Part I.A	Part I.A.1	Part I.A.1	Authorization statement	Language rearranged and enhanced for acuity purposes.	
	Part I.A.1(a)	Part I.A.1(a)	Design flow footnote	No Change	01/13
	Part I.A.1(b)	Part I.A.1(b)	Significant figures footnote	"Digits" changed to "figures" to match GM06-2012.	
	--	Part I.A.1(c)	Bacterial monitoring criteria footnote	New, regional addition in order to define bacterial monitoring frequency required in GM10-2003.	
	Part I.A.1(c)	Part I.A.1(d)	Compliance schedule reference	Added to remind the permittee that a compliance schedule for the new Ammonia limitation has been granted.	
	Part I.A.2	Part I.A.2	No discharge floating solids/foam	No Change	
	Part I.A.3	Part I.A.3	Sample location	No Change.	
	Part I.A.4	Part I.A.4	Part I.B reference (TRC & Bacterial Requirements)	Language revised to include reference to bacterial requirements.	
	Part I.A.5	Part I.A.5	85% removal BOD_5 & TSS	No Change	
Special Conditions Added or Modified	Part I.B.1	Part I.B	Additional TRC Limitations and Monitoring Requirements	Wording and monitoring frequency description revised for acuity purposes. Fecal coliform monitoring added if disinfection other than chlorination is used.	
	Part I.C.1	Part I.C.1	95% Capacity Reopener	No Change	
	Part I.C.2	Part I.C.2	O & M Manual	Revised to reflect boilerplate language released by OWP&CA on 4/3/2012	
	Part I.C.3	Part I.C.3	Licensed Operator	DPOR regulation name changed to match current regulation.	
	Part I.C.4	Part I.C.4	Reliability Class	No Change	
	Part I.C.5	Part I.C.5	Sludge Use and Disposal	Revised to reflect current agency guidance (GM10-2003, MN-3, Pg. 16).	
	Part I.C.6	Part I.C.6	Sludge Reopener	No Change	
	Part I.C.7	Part I.C.7	Compliance Reporting	Revised to reflect current agency guidance (GM10-2003, MN-3, Pg. 14). Language further revised according to regional procedure and for clarity purposes. BOD_5 QL revised from 5 mg/L to 2 mg/L for consistency with recently adopted VPDES General Permit regulations.	
	Part I.C.8	Part I.C.8	Materials Handling/Storage	Revised to reflect agency boilerplate contained in GM10-2003 (IN-3, Pg.6).	
	Part I.C.9	Part I.C.9	TMDL / Nutrient Reopener	Language revised to reflect current agency guidance (GM07-2008 Amnd.2).	
	Part I.C.10	Part I.C.10	Indirect Dischargers	No Change	
	Part I.C.11	Part I.C.11	CTC, CTO Requirement	Revised wording to reflect current agency guidance (GM10-2003, MN-3, Pg.4).	
	--	Part I.C.12	Treatment Works Closure Plan	New, reflects SCAT regulations requirements (9 VAC 25-790-120 E.).	
	Part I.B.2	Part I.C.13	Schedule of Compliance	Compliance schedule revised to reflect Ammonia limitations per the 2013 permit. Language enhanced for clarity.	
	Part I.C.12	--	Effluent Monitoring Frequencies	Removed because this facility no longer qualifies for reduced monitoring.	

	From	To	Permit Section Changed	Reason for Change	Date
	--	Part II.A.4	VELAP Requirements	New, incorporated to reflect change in laboratory accreditation requirements and in accordance with GM10-2003	
	--	Part II.K.1.c	Signatory Requirements	Definition of "federal" principal executive officer expanded to define all "public" agencies.	
Changes to Cover Page	The structure and language of the cover page have been slightly modified in accordance with new agency procedures and for streamlining purposes.				

22. Variances/Alternate Limits or Conditions: None.

23. Regulation of Users: 9VAC25-31-280 B 9: There are no industrial users contributing to the treatment works.

24. Public Notice Information required by 9 VAC 25-31-280 B:

Comment period: Start Date: End Date:
Published Dates:
Name of Newspaper: *Southside Sentinel*

All pertinent information is on file and may be inspected or copied by contacting Jeremy Kazio at:

Virginia Department of Environmental Quality (DEQ)
Piedmont Regional Office
4949-A Cox Road
Glen Allen, Virginia 23060-6296

Telephone Number 804/527-5044
Facsimile Number 804/527-5106
Email Jeremy.Kazio@deq.virginia.gov

DEQ accepts comments and requests for public hearing by hand delivery e-mail, fax or postal mail. All comments and requests must be in writing and be received by DEQ during the comment period. Submittals must include the names, mailing addresses and telephone numbers of the commenter/requester and of all persons represented by the commenter/requester. A request for public hearing must also include: 1) The reason why a public hearing is requested. 2) A brief, informal statement regarding the nature and extent of the interest of the requester or of those represented by the requester, including how and to what extent such interest would be directly and adversely affected by the permit. 3) Specific references, where possible, to terms and conditions of the permit with suggested revisions. A public hearing may be held, including another comment period, if public response is significant, based on individual requests for a public hearing, and there are substantial, disputed issues relevant to the permit. The public may review the draft permit and application at the DEQ Piedmont Regional Office by appointment, or may request copies of the documents from the contact person listed above.

25. 303(d) Impaired Waters / Total Maximum Daily Load (TMDL):

During the 2010 305(b)/303(d) Integrated Water Quality Assessment, the receiving stream was considered a Category 5A water ("A Water Quality Standard is not attained. The water is impaired or threatened for one or more designated uses by a pollutant(s) and requires a TMDL (303d list).") The applicable fact sheets are attached. The Aquatic Life Use is impaired due to failure of the Open Water Subuse's summer 30-day mean dissolved oxygen criteria in the mesohaline Rappahannock estuary and inadequate benthic community in the Rappahannock mainstem. The Fish Consumption Use is impaired due to a VDH fish consumption advisory for PCBs; arsenic is considered a non-impairing observed effect due to exceedance of a fish tissue screening value. The Wildlife Use and Recreation Uses are fully supporting.

The portion of the Rappahannock River to which the nursing home discharges is included under a VDH shellfish harvest prohibition due to the presence of the discharger. Therefore, the Shellfish Use is considered to have been removed.

The facility was addressed in the Chesapeake Bay TMDL, which was approved by the EPA on 12/29/2010. The TMDL allocates loads for total nitrogen, total phosphorus, and total suspended solids to protect the dissolved oxygen and submerged aquatic vegetation acreage criteria in the Chesapeake Bay and its tidal tributaries. The discharge was included in the aggregated loads for non-significant wastewater dischargers in the Rappahannock mesohaline estuary (RPPMH). The nutrient allocations are administered through the Watershed Nutrient General Permit; the TSS allocations are considered aggregated and facilities with technology-based TSS limits are considered to be in conformance with the TMDL.

a. *Benthic Impairment:* This facility discharges treated domestic effluent that must meet a monthly average TSS limitation of 30 mg/L. The discharge of suspended solids from this facility is negligible and is not expected to cause or contribute to the existing benthic impairment.

b. *Fish Consumption Impairment due to PCBs*: This facility treats domestic effluent originating from a nursing home, and does not have any industrial contributors. The effluent is not considered to be a source of PCBs, and therefore, this facility is not expected to cause or contribute to the existing fish consumption use impairment.

c. *Chesapeake Bay TMDL*: This facility discharges directly to the Rappahannock River in the Chesapeake Bay watershed in the Rappahannock River mesohaline segment (RRPMH), which extends from a cross section of the river located at Mulberry Island, downstream to the mouth of the river, which is a cross section between the southernmost tip of Fleets Island south to Stingray Point. The receiving stream has been addressed in the Chesapeake Bay TMDL, approved by EPA on December 29, 2010. The TMDL addresses dissolved oxygen (DO), chlorophyll a, and submerged aquatic vegetation (SAV) impairments in the main stem Chesapeake Bay and its tidal tributaries by establishing non-point source load allocations (LAs) and point-source waste load allocations (WLAs) for Total Nitrogen (TN), Total Phosphorus (TP) and Total Suspended Solids (TSS) to meet applicable Virginia Water Quality Standards contained in 9VAC25-260-185.

Implementation of the Chesapeake Bay TDML is currently accomplished in accordance with the Commonwealth of Virginia's Phase I Watershed Implementation Plan (WIP), approved by EPA on December 29, 2010. The approved WIP recognizes the "General VPDES Watershed Permit Regulation for Total Nitrogen and Total Phosphorus Discharges and Nutrient Trading in the Chesapeake Bay Watershed of Virginia" (9VAC25-820) as controlling the nutrient allocations for non-significant Chesapeake Bay dischargers. The approved WIP states that for non-significant Municipal and Industrial facilities, nutrient WLAs are to be consistent with

Code of Virginia procedures, which set baseline WLAs to 2005 permitted design capacity nutrient load levels. In accordance with the WIP, TN and TP WLAs for non-significant facilities are considered aggregate allocations and will not be included in individual permits. The WIP also considers TSS WLAs for non-significant facilities to be aggregate allocations, but TSS limits are to be included in individual VPDES permits in conformance with the technology-based requirements of the Clean Water Act. However, the WIP recognizes that so long as the aggregated TSS permitted loads for all dischargers is less than the aggregated TSS load in the WIP, the individual permit will be consistent with the TMDL.

40 CFR 122.44(d)(1)(vii)(B) requires permits to be written with effluent limits necessary to meet water quality standards and to be consistent with the assumptions and requirements of applicable WLAs. This facility is considered a Non-significant Chesapeake Bay discharger because it is an existing facility with a permitted design capacity flow of less than 100,000 gallons per day into tidal waters. This facility has not made application for a new or expanded discharge since 2005. It is therefore covered by rule under the 9VAC25-820 regulation. In accordance with the WIP, TN and TP load limits are not included in this individual permit, but are consistent with the TMDL because the current nutrient loads are in conformance with the facility's 2005 permitted design capacity loads. This individual permit includes TSS limits of 30 mg/L that are in conformance with technology-based requirements and, in turn, are consistent with the Chesapeake Bay TMDL.

d. *Dissolved Oxygen (DO):* The 2013 permit has limitations of 30 mg/L BOD_5, and minimum 5.0 mg/L for DO which provide protection of instream DO concentrations to at least 5.0 mg/L. Implementation of the full Chesapeake Bay WIP, including Nutrient General Permit reductions combined with actions proposed in other source sectors, is expected to adequately address ambient conditions such that the proposed effluent limits of this individual permit are consistent with the Chesapeake Bay TMDL, and will not cause an impairment or observed violation of the standards for DO, chlorophyll a, or SAV as required by 9VAC25-260-185.

e. *Shellfish:* As stated above, the presence of this discharge has prompted the Virginia Department of Health Division of Shellfish Sanitation to place a prohibition on the harvest of shellfish from the area surrounding the discharge point, and consequently, the shellfish use designation has been removed. Regardless, a limitation for fecal coliform has been included in the 2013 permit in order to prevent the prohibited area from expanding (see Item 16 of this fact sheet).

26. Additional Comments:

a. Previous Board Action: None

b. Staff Comments:

- Storm Water Discharges: Registration for coverage under the VAR05 ISWGP is applicable to treatment works treating domestic sewage (TWTDS) facilities with a design flow of 1.0 MGD or more. Because this facility is permitted to discharge 0.020 MGD in accordance with its design flow, the VAR05 ISWGP is not applicable at this time.

- Monitoring Frequency Reductions: In the 3 years preceding the drafting of this 2013 permit, the permittee received one Warning Letter (W2010-07-P-1009) for reporting limitation violations for Chlorine and Enterococci, as well as incorrect reporting within the permittee's DMR. In accordance with GM10-2003 (MN-2, Pg. 2), monitoring frequency reductions are only applied in permits for facilities having exemplary operations that consistently meet permit

requirements within the 3 years preceding permit reissuance. Consequently, this facility does not qualify for reduced monitoring.

- Financial assurance does not apply to this facility. A privately owned treatment plant with a design flow between 1,000 gpd and 40,000 gpd serving private residences (i.e. homes, duplexes, mobile homes, apartments, etc, as defined in 9 VAC 25-650-10.), must have a form of Financial Assurance in place . This concept applies to any privately owned facility where the interruption of sewer service would make it such that residents served by that facility could no longer occupy their permanent home. Since this facility does not provide sanitary services to any permanent residences, the need for DEQ to ensure a temporary continuation of services, in the event that the owner/operator ceases operations, does not exist, and thus, neither does the need for financial assurance.

- The permittee is not a participant in Virginia's Environmental Excellence Program.

- Coordination with the Virginia Department of Health –Division of Shellfish Sanitation indicated that the existing discharge would not cause any change to the existing shellfish closures within this facility's receiving water body.

- This permit reissuance is non-controversial. The staff believes that the attached effluent limitations will maintain the Water Quality Standards adopted by the Board.

- The discharge is in conformance with the existing planning documents for the area.

- The permittee last paid his annual maintenance fees on 10/25/2012.

- The permittee is not currently enrolled in the e-DMR program, but included a note in a 1/16/2013 fax that he would soon submit the e-DMR application form.

- In accordance §62.1-44.15:01.A.2, 9 VAC25-31-290.G.2 and GM11-005, a copy of the public notice for the 2013 permit reissuance was mailed to the Middle Peninsula Regional Planning District Commission, the Middlesex County Administrator, and the Middlesex Chairman of the Board of Supervisors on ---. No comments regarding the permit action were received.

- The 2013-2018 permit cycle expiration date is shortened from a 5-year expiration of September 28, 2018 to August 31, 2018, in order for the next permit term to start with a complete calendar month.

c. Public Comments: No comments were received during the public comment period.

27. Summary of attachments to this fact sheet:

Attachment A	Flow Frequency Memorandum and 303(d) Fact Sheets
Attachment B	Flow Diagram and Treatment Plant Description
Attachment C	Aerial Photograph
Attachment D	January 9, 2013 Site Inspection Report
Attachment E	Ambient and Effluent Data Used for Limitation Evaluations
Attachment F	2013 and 2008 MSTRANTI and STATS Printouts
Attachment G	Federal Effluent Guideline 40 CFR 133.102 (Secondary Treatment)

Attachment A

Flow Frequency Memorandum and 303(d) Fact Sheets

MEMORANDUM

DEPARTMENT OF ENVIRONMENTAL QUALITY
Piedmont Regional Office
4949-A Cox Road Glen Allen, Virginia 23060

SUBJECT: Flow Frequency Determination / 303(d) Status Request
Mizpah Nursing Home WWTP – VA0063029

TO: Jeremy Kazio

FROM: Jennifer Palmore, P.G.

DATE: January 2, 2012

COPIES: File

The Mizpah Nursing Home's wastewater treatment plant discharges to the Rappahannock River at the mouth of Whiting Creek near Locust Hill, VA. The outfall is located at rivermile 3-RPP013.77. Flow frequencies have been requested for use in developing effluent limitations for the VPDES permit.

The Rappahannock River is tidally influenced at the discharge point. Flow frequencies cannot be determined for tidal waters; therefore, standard dilution ratios should be used to evaluate the effluent's impact on the water body.

During the 2010 305(b)/303(d) Integrated Water Quality Assessment, the receiving stream was considered a Category 5A water ("A Water Quality Standard is not attained. The water is impaired or threatened for one or more designated uses by a pollutant(s) and requires a TMDL (303d list).") The applicable fact sheets are attached. The Aquatic Life Use is impaired due to failure of the Open Water Subuse's summer 30-day mean dissolved oxygen criteria in the mesohaline Rappahannock estuary and inadequate benthic community in the Rappahannock mainstem. The Fish Consumption Use is impaired due to a VDH fish consumption advisory for PCBs; arsenic is considered a non-impairing observed effect due to exceedance of a fish tissue screening value. The Wildlife Use and Recreation Uses are fully supporting.

During the 2012 Assessment, the receiving stream was considered a Category 5D water ("The Water Quality Standard is not attained where TMDLs for a pollutant(s) have been developed but one or more pollutants are still causing impairment requiring additional TMDL development.") The applicable fact sheets are attached. The Aquatic Life Use is impaired due to inadequate benthic community in the Rappahannock mainstem. In addition, the segment previously failed a dissolved oxygen criteria. Although the segment met all measured DO criteria in the 2012 cycle, it must remain impaired due to EPA policy. The Fish Consumption Use is impaired due to a VDH fish consumption advisory for PCBs; arsenic is considered a non-impairing observed effect due to exceedance of a fish tissue screening value. The Wildlife Use and Recreation Uses are fully supporting.

The portion of the Rappahannock River to which the nursing home discharges is included under a VDH shellfish harvest prohibition due to the presence of the discharger. Therefore, the Shellfish Use is considered to have been removed.

The facility was addressed in the Chesapeake Bay TMDL, which was approved by the EPA on 12/29/2010. The TMDL allocates loads for total nitrogen, total phosphorus, and total suspended solids to protect the dissolved oxygen and submerged aquatic vegetation acreage criteria in the Chesapeake Bay and its tidal tributaries. The discharge was included in the aggregated loads for non-significant wastewater dischargers in the Rappahannock mesohaline estuary (RPPMH). The nutrient allocations are

2010 Fact Sheets for 303(d) Waters

RIVER BASIN: Rappahannock River Basin

HYDROLOGIC UNIT: 02080104

STREAM NAME: **Rappahannock River - NVRO**

TMDL ID: **E20E-03-PCB**

2010 IMPAIRED AREA ID: CB-RPPTF

ASSESSMENT CATEGORY: 5A

TMDL DUE DATE: 2018

IMPAIRED SIZE: ~123 - Miles

Watershed: VAP-E22E

INITIAL LISTING: 2006

UPSTREAM LIMIT: I-95 bridge

DOWNSTREAM LIMIT: Mouth

The Rappahannock River from the I-95 bridge downstream to the mouth near Stingray Point, including its tributaries Hazel Run up the I-95 bridge crossing and Claiborne Run up to the Route 1 bridge crossing.

CLEAN WATER ACT GOAL AND USE SUPPORT:

Fish Consumption Use - Not Supporting

IMPAIRMENT: PCBs

During the 2006 cycle, the VDH issued a fish consumption advisory on 12/13/2004 for PCBs in American eel, blue catfish, carp, channel catfish, croaker, gizzard shad, and anadromous (coastal) striped bass

IMPAIRMENT SOURCE: Unknown

Source of the PCBs is considered unknown.

RECOMMENDATION: Problem Characterization

2010 Fact Sheets for 303(d) Waters

RIVER BASIN: Rappahannock River Basin

HYDROLOGIC UNIT: 02080104

STREAM NAME: **Rappahannock River**

TMDL ID: **RPPMH-DO-BAY**

2010 IMPAIRED AREA ID: CB-RPPMH

ASSESSMENT CATEGORY: 5A

TMDL DUE DATE: 2010

IMPAIRED SIZE: 123.53 - Sq. Mi.

Watershed: VAP-E22E

INITIAL LISTING: 1998

UPSTREAM LIMIT: Mesohaline boundary

DOWNSTREAM LIMIT: Mouth at Chesapeake Bay

The mesohaline Rappahannock River and tidal tributaries.

CLEAN WATER ACT GOAL AND USE SUPPORT:

Aquatic Life Use - Not Supporting, Open Water Subuse - Not Supporting, Deep Water Subuse - Not Supporting, Deep Channel Use - Fully Supporting

IMPAIRMENT: Dissolved Oxygen

The mainstem of the Rappahannock River from Myrtle Swamp to its mouth was originally listed in 1998 by DEQ due to dissolved oxygen exceedances and nutrient overenrichment. The EPA extended the segment upstream to the confluence with Totuskey Creek. In the 2004 cycle dissolved oxygen exceedances were noted in deepwater and deep channel stations downstream of the confluence with Lancaster Creek (Morattico), which is further downstream.

The new Chesapeake Bay Water Quality Standards were implemented during the 2006 cycle. The mesohaline portion of the Rappahannock fails the Open Water Subuse's summer 30-day dissolved oxygen criteria and applicable areas fail the Deep Water 30-day dissolved oxygen criteria. During the 2008 cycle, the Deep Channel Subuse's instantaneous minimum dissolved oxygen criteria was violated, however the segment met the use during the 2010 cycle and will be delisted. The Open Water Subuse's 30-day rest-of-year standard was met and there was insufficient data to assess the other dissolved oxygen criteria.

IMPAIRMENT SOURCE: Point Source, Nonpoint Source

Tributary strategy has been developed.

RECOMMENDATION: Problem Characterization

2010 Fact Sheets for 303(d) Waters

RIVER BASIN: Rappahannock River Basin

HYDROLOGIC UNIT: 02080104

STREAM NAME: **Rappahannock River**

TMDL ID: **E22E-02-EBEN**

2010 IMPAIRED AREA ID: CB-RPPMH

ASSESSMENT CATEGORY: 5A

TMDL DUE DATE: 2018

IMPAIRED SIZE: 110.176 - Sq. Mi.

Watershed: VAP-E22E

INITIAL LISTING: 2006

UPSTREAM LIMIT: Mesohaline Boundary

DOWNSTREAM LIMIT: Mouth at Chesapeake Bay

The mesohaline mainstem of the Rappahannock River

CLEAN WATER ACT GOAL AND USE SUPPORT:

Aquatic Life Use - Not Supporting

IMPAIRMENT: Estuarine Bioassessments

In 2004 the mesohaline portion of the mainstem Rappahannock indicated benthic impairment based on the Chesapeake Bay Benthic Index of Biological Integrity. The impairment was attributed to low oxygen and the benthic impairment was treated as a confirmation of the impairment. The mainstem remained impaired in the 2006 cycle, however due to guidance changes the segment was 303(d) listed for estuarine bioassessments. The segment remains impaired in the 2010 cycle.

IMPAIRMENT SOURCE: Unknown

The source of the impairment is unknown.

RECOMMENDATION: Problem Characterization

administered through the Watershed Nutrient General Permit; the TSS allocations are considered aggregated and facilities with technology-based TSS limits are considered to be in conformance with the TMDL.

Water quality data from monitoring station 3-RPP010.60 is attached. The station is located on the Rappahannock River off of Orchard Point and is approximately 3.11 miles downstream of the outfall.

The receiving stream has been considered a Tier 1 water due to the estuarine benthic impairment.

If you have any questions concerning this analysis, please let me know.

Attachment B

Flow Diagram

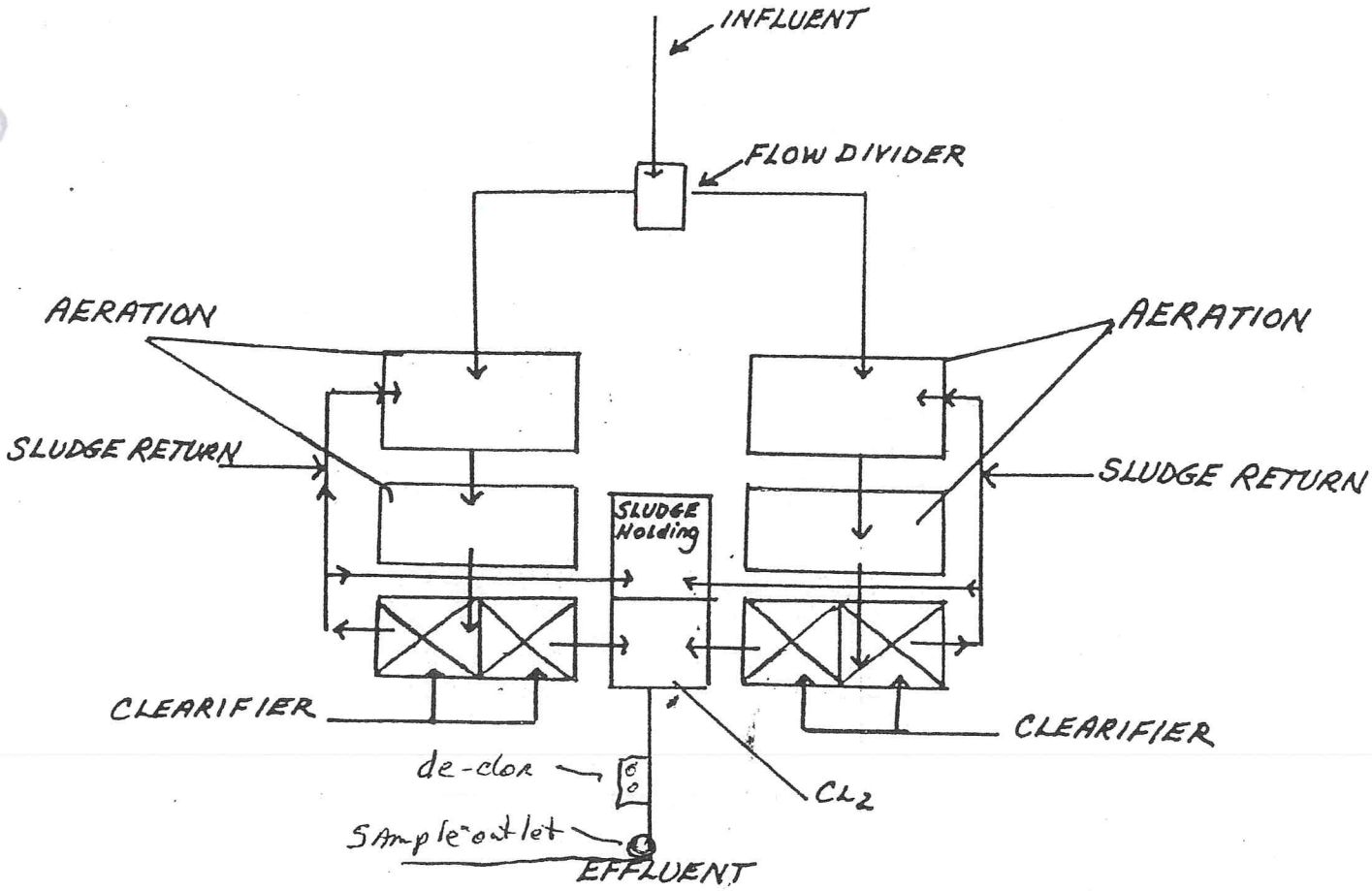

SCHEMATIC FLOW DIAGRAM

NOT TO SCALE

Revised 2-29-08

PDF processed with CutePDF evaluation edition www.CutePDF.com

Description of Sewage Treatment Plant

Mizpah Nursing Home Inc. owns a duel train extended aeration wastewater treatment facility at Locust Hill, Virginia. The plant is constructed of 8 concrete tanks which consist of four aeration tanks, 2 settling tanks and 1 chlorine contact tank and a sludge holding tank.

The raw sewage enters the aeration tank or chamber directly, or immediately after a trash intercepting device. The sewage is thoroughly agitated by diffused air bubbling up through liquid causing it to mix as well as become oxidized.

The aerated sewage flows to a settling tank or chamber. The sewage separates behind a baffle and the stabilized sludge settles to the bottom to be returned through air pumps to the inlet to the plant. This sludge is mixed with the raw sewage and immediately begins attacking it. These sludge lines operate continuously.

A portion of the aerated sewage rises behind the baffle and must be hosed or agitated to cause it to settle. This material is partially treated, air filled and greasy and may need skimming.

The clear liquid rising on the opposite side of the baffle is further filtered by a layer of biological sludge which is visible 4 or 5 feet down in the final settling compartment. The clear liquid then flows over a weir and into the chlorine contact tank where it is disinfected then out through a meter box into the outfall pipe where it is discharged.

A scum baffle is front of the weir, serves as a precaution against hydraulic surges which may carry solids over the weir up through the sludge blanket. When particles are carried to the surface of the final tank the skimmer is used for removing them.

If the sludge needs to be removed it is generally accomplished by a scavenger truck. Plant tests will show when, or if, there has been an excessive sludge build-up. Sludge is removed from the hopper in the final tank in small amounts.

Revised 2-29-2008

PDF processed with CutePDF evaluation edition www.CutePDF.com

PDF processed with CutePDF evaluation edition www.CutePDF.com

Driving directions to 5542 Pampa Rd, Gloucester, VA 23061

74 Mizpah Rd
Locust Hill, VA 23092

1. Head **south** on **Mizpah Rd** toward **Marsh Pungo Rd/State Route 634**
2. Continue onto **Marsh Pungo Rd/State Route 634**
3. Turn right onto **VA-33 W/General Puller Hwy**
   Continue to follow General Puller Hwy
4. Turn left onto **US-17 S/Tidewater Trail**
   Continue to follow US-17 S
5. Turn left onto **VA-198 E/Glenns Rd**
6. Turn right onto **Pampa Rd/State Route 601**
   Destination will be on the left

5542 Pampa Rd
Gloucester, VA 23061

These directions are for planning purposes only. You may find that construction projects, traffic, weather, or other events may cause conditions to differ from the map results, and you should plan your route accordingly. You must obey all signs or notices regarding your r

Map data ©2012 Google

Attachment C

Aerial Photograph

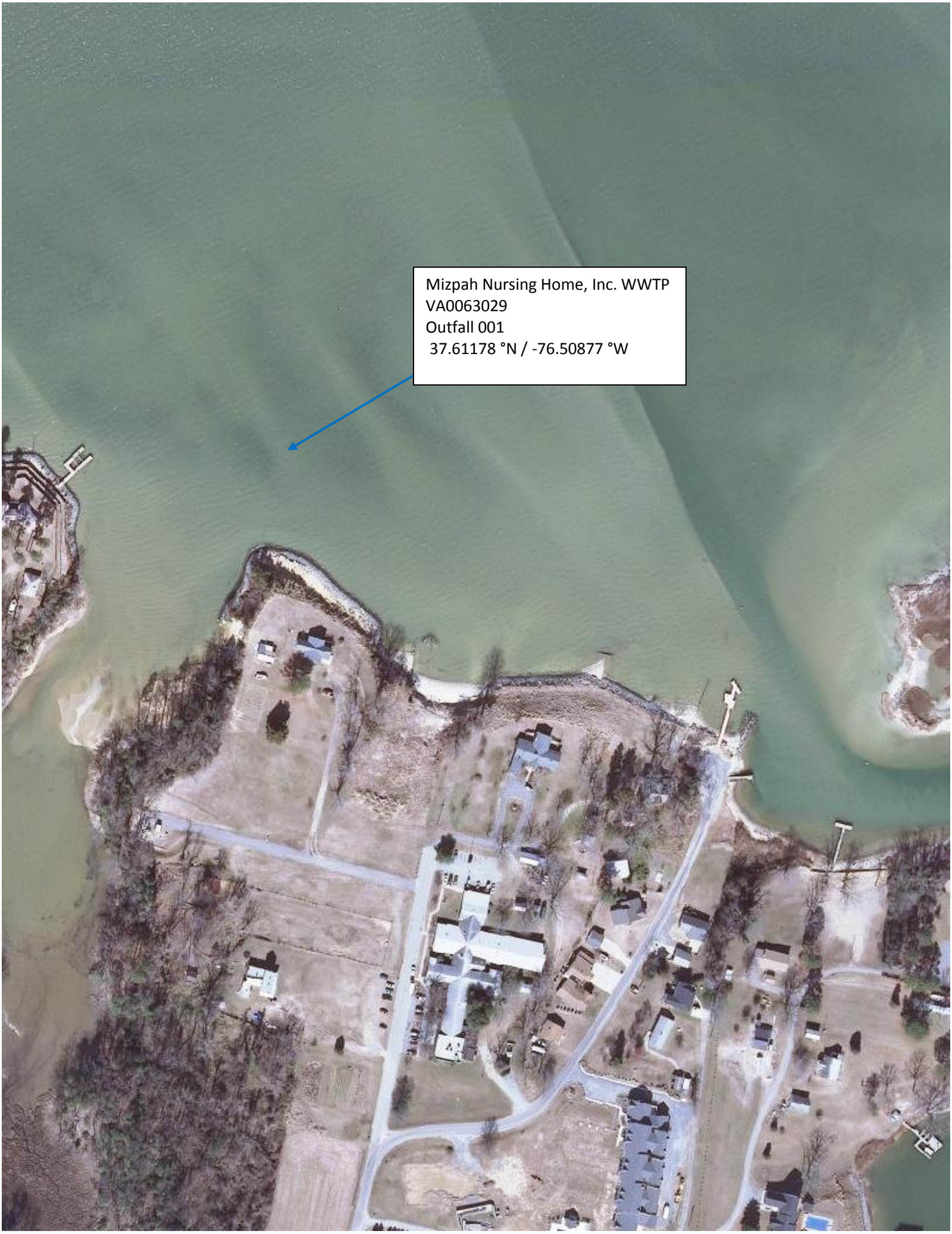
Mizpah Nursing Home, Inc. WWTP
VA0063029
Outfall 001
37.61178 °N / -76.50877 °W

Attachment D

January 9, 2013 Inspection Report

Virginia Department of Environmental Quality

WASTEWATER FACILITY INSPECTION REPORT

FACILITY NAME: Mizpah Nursing Home STP	**INSPECTION DATE:** January 9, 2013		
	INSPECTOR	Heather Deihls and Meredith Williams	
PERMIT No.: VA0063029	**REPORT DATE:**		
TYPE OF FACILITY: ☑ Municipal ☑ Small Minor ☐ Industrial ☐ Federal	**TIME OF INSPECTION:**	1122 Arrival	1259 Departure
	TOTAL TIME SPENT (including prep & travel)	8 hours	
PHOTOGRAPHS: ☑ Yes ☐ No	**UNANNOUNCED INSPECTION?** ☐ Yes ☑ No		
REVIEWED BY / Date:			
PRESENT DURING INSPECTION: J.D. Davis, Class III operator; John McKray, assistant			

TECHNICAL INSPECTION

1. Has there been any new construction? • If so, were plans and specifications approved? Comments:	☐ Yes ☑ No
2. Is the Operations and Maintenance Manual approved and up-to-date? Comments: Received 3/6/09.	☑ Yes ☐ No
3. Are the Permit and/or Operation and Maintenance Manual specified licensed operator being met? Comments: One Class IV required.	☑ Yes ☐ No
4. Are the Permit and/or Operation and Maintenance Manual specified operator staffing requirements being met? Comments:	☑ Yes ☐ No
5. Is there an established and adequate program for training personnel? Comments:	☑ Yes ☐ No
6. Are preventive maintenance task schedules being met? Comments:	☑ Yes ☐ No
7. Does the plant experience any organic or hydraulic overloading? Comments:	☐ Yes ☑ No
8. Has there been any bypassing or overflows since the last inspection? Comments:	☐ Yes ☑ No
9. Is the standby generator (including power transfer switch) operational and exercised regularly? Comments: Weekly a 30-40 minute cycle is run. Exercised under full load monthly.	☑ Yes ☐ No
10. Is the plant alarm system operational and tested regularly? Comments: N/A	☐ Yes ☑ No

TECHNICAL INSPECTION

11. Is sludge disposed of in accordance with the approved sludge management plan? Comments: Pumped and hauled by Septage Hauler- Brownley Septage Service as needed.	☑ Yes ☐ No
12. Is septage received? • If so, is septage loading controlled, and are appropriate records maintained? Comments:	☐ Yes ☑ No
13. Are all plant records (operational logs, equipment maintenance, industrial waste contributors, sampling and testing) available for review and are records adequate? Comments: Monthly records submitted with DMR.	☑ Yes ☐ No
14. Which of the following records does the plant maintain? ☑ Operational logs ☑ Instrument maintenance & calibration ☑ Mechanical equipment maintenance ☐ Industrial Waste Contribution (Municipal facilities) Comments:	
15. What does the operational log contain? ☐ Visual observations ☑ Flow Measurement ☑ Laboratory results ☑ Process adjustments ☑ Control calculations ☐ Other (specify) Comments:	
16. What do the mechanical equipment records contain? ☑ As built plans and specs ☑ Manufacturers instructions ☑ Lubrication schedules ☑ Spare parts inventory ☑ Equipment/parts suppliers ☐ Other (specify) Comments:	
17. What do the industrial waste contribution records contain (Municipal only)? ☐ Waste characteristics ☐ Impact on plant ☐ Locations and discharge types ☐ Other (specify) Comments: N/A	
18. Which of the following records are kept at the plant and available to personnel? ☑ Equipment maintenance records ☑ Operational log ☑ Industrial contributor records ☑ Instrumentation records ☑ Sampling and testing records Comments: Kept at Mizpah office.	
19. List records not normally available to plant personnel and their location: Comments: See above.	
20. Are the records maintained for the required time period (three or five years)? Comments:	☑ Yes ☐ No
21. The date back flow prevention device checked: 3/16/12.	

VA DEQ Wastewater Facility Inspection Report

Permit #	VA0063029

UNIT PROCESS EVALUATION SUMMARY SHEET

UNIT PROCESS	APPLICABLE	PROBLEMS*	COMMENTS
Sewage Pumping			
Flow Measurement (Influent)			
Screening/Comminution	X		
Grit Removal	X		
Oil/Water Separator			
Flow Equalization			
Ponds/Lagoons			
Imhoff Tank			
Primary Sedimentation			
Trickling Filter			
Septic Tank and Sand Filter			
Rotating Biological Contactor			
Activated Sludge Aeration	X		
Biological Nutrient Removal			
Sequencing Batch Reactor			
Secondary Sedimentation	X		
Flocculation			
Tertiary Sedimentation			
Filtration			
Micro-Screening			
Activated Carbon Adsorption			
Chlorination	X		
Dechlorination	X		
Ozonation			
Ultraviolet Disinfection			
Post Aeration			
Flow Measurement (Effluent)	X		
Land Application (Effluent)			
Plant Outfall	X		
Aerated Sludge Holding Tank	X		
Flotation Thickening (DAF)			
Gravity Thickening			
Aerobic Digestion			
Anaerobic Digestion			
Lime Stabilization			
Centrifugation			
Sludge Press			
Vacuum Filtration			
Drying Beds			
Thermal Treatment			
Incineration			
Composting			
Land Application (Sludge)			

* Problem Codes

1. Unit Needs Attention
2. Abnormal Influent/Effluent
3. Evidence of Equipment Failure
4. Unapproved Modification or Temporary Repair
5. Evidence of Process Upset
6. Other (explain in comments)

INSPECTION OVERVIEW AND CONDITION OF TREATMENT UNITS

The nursing home is served by a package sewage treatment plant. Mr. Davis has been the long time operator and the plant is well operated and maintained. Mr. Davis has an assistant that does some functions around the plant.

Barscreen, Grit Channel, and Splitter Weirs: The barscreen and grit channels are checked once or twice a day and cleaned as needed. Removed debris is placed in an adjacent trash can with lid for vector control. Weirs split flow to the dual train package plant. At the time of inspection minor debris was caught in one weir, but the division between trains appeared to be equal.

Blowers: Two blowers are present that rotate automatically between cycles. A new motor was installed in one blower in 2012. Air filters are changed every 6 months on schedule.

Aeration basins: Each of the two trains is equipped with two basins that operate in series. Aeration is provided via diffusers. The current aeration schedule is 30 minutes on and 30 off. Thirty and/or 60-minute settleability tests are performed daily. When settleability reaches ~ 800 ml/L, wasting is initiated. Settleability on the day of inspection was ~ 775 ml/L. RAS and decant from the sludge holding tank are returned to the first basin of each train. Train #1 was dark brown in color with minor foam noted. Train #2 was dark brown with more stiff, tan, foam indicating an older sludge.

Clarifier: A skimmer is present prior to clarification. Floatable solids are returned to the aeration basin. Each train contains one clarifier. Good settling was observed with clear effluent; double hopper cones are present in each unit. Return is continuous when blowers are running. Wasting generally takes 24 hours. When wasting, approximately 30% of material is sent to the sludge holding tank and approximately 70% is sent the primary aeration basin.

Disinfection: The facility utilizes liquid chlorine that is mixed weekly. The current dilution utilized is 10 gallons of bleach to 20 gallons of water. Based on average flow the peristaltic chlorine dosing pump was set to 20 strokes/minute. Chemicals are stored in a storage container. No spills or leaks were observed.

Chlorine Contact Tank (CCT) – The CCT appeared to be in good condition, precedes 45° V-Notch Weir.

Dechlorination – A two tablet dechlorination feeder is present and both sleeves are stocked. The feeder is checked once per day and tablets are replaced as needed. To prevent dechlor tablet bridging the sleeves are shaken when checked. The facility is using sodium sulfite "D-Chlor" tablets.

Aerated Sludge Holding Tank: Sludge is wasted from each clarifier in each train as needed. Sludge holding tank last pumped in October 2012. Plant blowers provide air.

Flow Measurement: A 45° V-Notch Weir is present. The VPDES permit requires flow to be estimated. Flows are recorded in the logbook. Dissolved oxygen readings are taken as flow comes over the weir. Post-aeration is not present and the facility is meeting permit limits.

Sample Collection – A sampling portal is present.

Outfall – The outfall reportedly has a diffuser approximately 250 feet from shore in the Rappahannock River. The diffuser has not been checked recently. The receiving stream (Rappahannock River) was viewed and no environmental impacts were noted. For bank stabilization purposes, the facility plans to install additional rip-rap in the vicinity of the outfall pipe.

EFFLUENT FIELD DATA: None.

Flow	MGD	**Dissolved Oxygen**	mg/L	**TRC (Contact Tank)**	mg/L
pH	S.U.	**Temperature**	˚C	**TRC (Final Effluent)**	mg/L

Was a Sampling Inspection conducted? ☐ Yes (see Sampling Inspection Report) ☑ No

CONDITION OF OUTFALL AND EFFLUENT CHARACTERISTICS:

1. Type of outfall:
   ☐ Shore based ☑ Submerged
2. Diffuser?
   ☑ Yes ☐ No
3. Are the outfall and supporting structures in good condition?
   ☑ Yes ☐ No
4. Final Effluent (evidence of following problems): NONE.
   ☐ Sludge bar ☐ Grease ☐ Turbid effluent ☐ Visible foam ☐ Unusual color ☐ Oil sheen
5. Is there a visible effluent plume in the receiving stream?
   ☐ Yes ☑ No
6. Receiving stream:
   ☑ No observed problems
   ☐ Indication of problems (explain below)
   Comments:

REQUIRED CORRECTIVE ACTIONS:

1. None.

NOTES and COMMENTS:

1. Some corrosion and biological growth were noted in the chamber following clarification. Monitor this area carefully to ensure proper preventative maintenance occurs.
2. To ensure even distribution, be sure to check the v-notch weirs in the influent basins when the bar screen is checked and cleaned. Although it did not appear to be hampering distribution, minor trash was noted on one weir at the time of inspection.

VA DEQ Wastewater Facility Inspection Report

Permit #	VA0063029

Digital Photographs taken 1/9/13

Photograph 1: Plant overview

Photograph 2: Influent

Photograph 3: V-notch splitter in influent tank

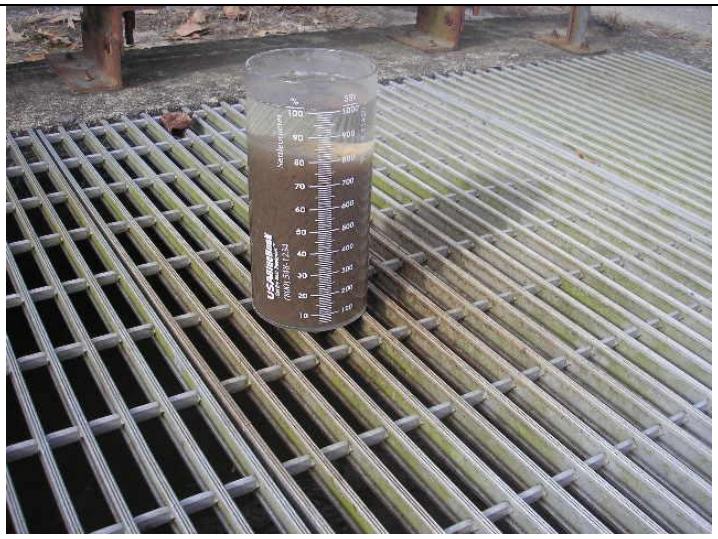

Photograph 4: Process control (Train 1; aeration tank 2)

Photograph 5: Process control (Train 2; aeration tank 1)

Photograph 6: Foam present in Train 2 aeration tank 1

VA DEQ Wastewater Facility Inspection Report

Permit #	VA0063029

Digital Photographs taken 1/9/13

Photograph 7: Clarifier effluent- train 1

Photograph 8: Chlorine contact tank

Photograph 9: Chlorine storage building

Photograph 10: Dechlor tablet feeder

Photograph 11: Sample portal

Photograph 12: Clear effluent sample

Permit #	VA0063029

Digital Photographs taken 1/9/13

Photograph 13: Outfall 001

Photograph 14: Rappahannock River

Attachment E

Ambient and Effluent Data Used for Limitation Evaluations

Mizpah Nursing Home, Inc. Wastewater Treatment Plant (VA0063029)
DMR Data: October 2008 - November 2012
2013 Permit Reissuance

Ammonia as N			
DMR Due	DMR Rec'd	Mo. Avg.	We. Avg.
		mg/L	mg/L
10-Nov-11	9-Nov-11	<QL	<QL
10-Dec-11	8-Dec-11	<QL	<QL
10-Jan-12	9-Jan-12	<QL	<QL
10-Feb-12	9-Feb-12	<QL	<QL
10-Mar-12	9-Mar-12	0.1	0.1
10-Apr-12	9-Apr-12	<QL	<QL
10-May-12	10-May-12	<QL	<QL
10-Jun-12	11-Jun-12	<QL	<QL
10-Jul-12	13-Jul-12	<QL	<QL
10-Aug-12	9-Aug-12	<QL	<QL
10-Sep-12	10-Sep-12	<QL	<QL
10-Oct-12	10-Oct-12	0.3	0.3
10-Nov-12	13-Nov-12	<QL	<QL
	Avg.	0.2	
	2008 Limit	4.5	
	% of Limit	4	
	Reduction	1/6 Months	

BOD_5					
DMR Due	DMR Rec'd	Mo. Avg.	Mo. Avg. Load	We. Avg.	We. Avg. Load
		mg/L	g/d	mg/L	g/d
10-Oct-08	9-Oct-08	<QL	<QL	<QL	<QL
10-Nov-08	10-Nov-08	<QL	<QL	<QL	<QL
10-Dec-08	10-Dec-08	<QL	<QL	<QL	<QL
10-Jan-09	9-Jan-09	<2	<QL	<2	<QL
10-Feb-09	9-Feb-09	<2	<QL	<2	<QL
10-Mar-09	9-Mar-09	<QL	<QL	<QL	<QL
10-Apr-09	9-Feb-09	<2	<QL	<2	<QL
10-Oct-09	8-May-09	<QL	<QL	<QL	<QL
10-Apr-10	10-Nov-09	<QL	<QL	<QL	<QL
10-Oct-10	8-Oct-10	<2	<60	<2	<60
10-Apr-11	8-Apr-11	2	590	2	590
10-Oct-11	7-Oct-11	5	147.61	5	147.61
10-Apr-12	9-Apr-12	3	88	3	88
10-Oct-12	10-Oct-12	<2	0.62	<2	0.62
	Avg.	3.333333333			
	2008 Limit	30			
	% of Limit	11			
	Reduction	1/6 Months			

Total Suspended Solids					
DMR Due	DMR Rec'd	Mo. Avg.	Mo. Avg. Load	We. Avg.	We. Avg. Load
		mg/L	g/d	mg/L	g/d
10-Oct-08	9-Oct-08	12.3	0.4189	12.3	0.42
10-Nov-08	10-Nov-08	10.2	347.46	10.2	347.46
10-Dec-08	10-Dec-08	10.2	335	10.2	335
10-Jan-09	9-Jan-09	10.2	335	10.2	335
10-Feb-09	9-Feb-09	15.6	555	15.6	555
10-Mar-09	9-Mar-09	15.6	555	15.6	555
10-Apr-09	9-Feb-09	15.6	555	15.6	555
10-Jul-09	8-May-09	11	233	11	233
10-Oct-09	10-Aug-09	12	410	12	410
10-Jan-10	10-Nov-09	7.5	267	7.5	267
10-Feb-10	9-Feb-10	11.5	383	11.5	383
10-Apr-10	9-Feb-10	11.5	383	11.5	383
10-Jul-10	10-May-10	5.7	19.84	5.7	19.84
10-Oct-10	8-Oct-10	7.3	230	7.3	230
10-Jan-11	7-Jan-11	6	199	6	199
10-Apr-11	8-Apr-11	15.5	457	15.5	457
10-Jul-11	8-Jul-11	3.4	11	3.4	11
10-Oct-11	7-Oct-11	5.2	295.27	5.2	295.27
10-Jan-12	9-Jan-12	5	326	5	326
10-Apr-12	9-Apr-12	9.8	289	9.8	289
10-Jul-12	13-Jul-12	4.6	170	4.6	170
10-Oct-12	10-Oct-12	9.6	298	9.6	298
	Avg.	9.786363636			
	2008 Limit	30			
	% of Limit	33			
	Reduction	1/3 Months			

Dissolved Oxygen		
DMR Due	DMR Rec'd	Minimum
		mg/L
10-Nov-11	9-Nov-11	5.86
10-Dec-11	8-Dec-11	5.89
10-Jan-12	9-Jan-12	6.1
10-Feb-12	9-Feb-12	5.94
10-Mar-12	9-Mar-12	6.97
10-Apr-12	9-Apr-12	7.14
10-May-12	10-May-12	6.78
10-Jun-12	11-Jun-12	7.01
10-Jul-12	13-Jul-12	6.61
10-Aug-12	9-Aug-12	5.62
10-Sep-12	10-Sep-12	6.06
10-Oct-12	10-Oct-12	5.13
10-Nov-12	13-Nov-12	5.01

Mizpah Nursing Home, Inc. Wastewater Treatment Plant (VA0063029)
DMR Data: October 2008 - November 2012
2013 Permit Reissuance

Fecal Coliform		
DMR Due	DMR Rec'd	Mo. Avg.
		cfm/100 mL
10-Oct-08	9-Oct-08	2
10-Nov-08	10-Nov-08	<QL
10-Dec-08	10-Dec-08	9
10-Jan-09	9-Jan-09	2.5
10-Feb-09	9-Feb-09	<1
10-Mar-09	9-Mar-09	<QL
10-Apr-09	8-Apr-09	<1
10-May-09	8-May-09	<QL
10-Jun-09	9-Jun-09	<1
10-Jul-09	9-Jul-09	<1
10-Aug-09	10-Aug-09	<QL
10-Sep-09	10-Sep-09	<QL
10-Oct-09	9-Oct-09	<QL
10-Nov-09	10-Nov-09	<QL
10-Dec-09	14-Dec-09	<QL
10-Jan-10	8-Jan-10	<QL
10-Feb-10	9-Feb-10	<QL
10-Mar-10	9-Mar-10	5.5
10-Apr-10	7-Apr-10	6
10-May-10	10-May-10	2
10-Jun-10	10-Jun-10	<QL
10-Jul-10	9-Jul-10	<QL
10-Aug-10	9-Aug-10	<2
10-Sep-10	10-Sep-10	<2
10-Oct-10	8-Oct-10	<2
10-Nov-10	9-Nov-10	<2
10-Dec-10	8-Dec-10	2
10-Jan-11	7-Jan-10	<2
10-Feb-11	9-Feb-11	<2
10-Mar-11	9-Mar-11	<2
10-Apr-11	8-Apr-11	<2
10-May-11	10-May-10	<2
10-Jun-11	9-Jun-11	<2
10-Jul-11	8-Jul-11	<2
10-Aug-11	9-Aug-11	<2
10-Sep-11	6-Sep-11	<2
10-Oct-11	7-Oct-11	<2
10-Nov-11	9-Nov-11	<2
10-Dec-11	8-Dec-11	<2
10-Jan-12	9-Jan-12	<2
10-Feb-12	9-Feb-12	<2
10-Mar-12	9-Mar-12	<2
10-Apr-12	9-Apr-12	<2
10-May-12	10-May-12	<2
10-Jun-12	11-Jun-12	<1.5
10-Jul-12	13-Jul-12	<2
10-Aug-12	9-Aug-12	<2
10-Sep-12	10-Sep-12	<2
10-Oct-12	10-Oct-12	<2
10-Nov-12	13-Nov-12	<2

Enterococci		
DMR Due	DMR Rec'd	Mo.Geo. Mean
		cfm/100 mL
10-Nov-08	10-Nov-08	27
10-Dec-08	10-Dec-08	34.6
10-Jan-09	9-Jan-09	31.6
10-Feb-09	9-Feb-09	26
10-Mar-09	9-Mar-09	7.5
10-Apr-09	8-Apr-09	1.5
10-May-09	8-May-09	11
10-Jun-09	9-Jun-09	<1
10-Jul-09	9-Jul-09	3.5
10-Aug-09	10-Aug-09	16
10-Sep-09	10-Sep-09	113
10-Oct-09	9-Oct-09	18
10-Nov-09	10-Nov-09	28.5
10-Dec-09	14-Dec-09	24.5
10-Jan-10	8-Jan-10	17
10-Feb-10	9-Feb-10	21
10-Mar-10	9-Mar-10	<QL
10-Apr-10	7-Apr-10	7
10-May-10	10-May-10	1
10-Jun-10	10-Jun-10	362.1
10-Jul-10	9-Jul-10	<QL
10-Aug-10	9-Aug-10	<1
10-Sep-10	10-Sep-10	<1
10-Oct-10	8-Oct-10	<1
10-Nov-10	9-Nov-10	<1
10-Dec-10	8-Dec-10	<1
10-Jan-11	7-Jan-10	3
10-Feb-11	9-Feb-11	26
10-Mar-11	9-Mar-11	<1
10-Apr-11	8-Apr-11	13
10-May-11	10-May-10	<1
10-Jun-11	9-Jun-11	<1
10-Jul-11	8-Jul-11	<1
10-Aug-11	9-Aug-11	<1
10-Sep-11	6-Sep-11	<1
10-Oct-11	7-Oct-11	5
10-Nov-11	9-Nov-11	<1
10-Dec-11	8-Dec-11	<1
10-Jan-12	9-Jan-12	5
10-Feb-12	9-Feb-12	<1
10-Mar-12	9-Mar-12	<1
10-Apr-12	9-Apr-12	<1
10-May-12	10-May-12	<1
10-Jun-12	11-Jun-12	<1
10-Jul-12	13-Jul-12	<1
10-Aug-12	9-Aug-12	<1
10-Sep-12	10-Sep-12	<1
10-Oct-12	10-Oct-12	<1
10-Nov-12	13-Nov-12	<1

Flow			
DMR Due	DMR Rec'd	Mo. Avg.	Maximum
		MGD	MGD
10-Oct-08	9-Oct-08	0.0091	0.01
10-Nov-08	10-Nov-08	0.009	0.0098
10-Dec-08	10-Dec-08	0.0087	0.0094
10-Jan-09	9-Jan-09	0.0089	0.01
10-Feb-09	9-Feb-09	0.0087	0.0098
10-Mar-09	9-Mar-09	0.0087	0.01
10-Apr-09	8-Apr-09	0.0087	0.0094
10-May-09	8-May-09	0.0087	0.01
10-Jun-09	9-Jun-09	0.00849	0.0096
10-Jul-09	9-Jul-09	0.0086	0.0094
10-Aug-09	10-Aug-09	0.0084	0.0094
10-Sep-09	10-Sep-09	0.0085	0.0092
10-Oct-09	9-Oct-09	0.00828	0.0092
10-Nov-09	10-Nov-09	0.0084	0.0094
10-Dec-09	14-Dec-09	0.0081	0.009
10-Jan-10	8-Jan-10	0.0076	0.0084
10-Feb-10	9-Feb-10	0.0083	0.0096
10-Mar-10	9-Mar-10	0.0087	0.0096
10-Apr-10	7-Apr-10	0.008	0.0096
10-May-10	10-May-10	0.009	0.0096
10-Jun-10	10-Jun-10	0.009	0.0096
10-Jul-10	9-Jul-10	0.0084	0.0096
10-Aug-10	9-Aug-10	0.0085	0.0096
10-Sep-10	10-Sep-10	0.0085	0.0094
10-Oct-10	8-Oct-10	0.0084	0.0092
10-Nov-10	9-Nov-10	0.0085	0.0094
10-Dec-10	8-Dec-10	0.0083	0.0092
10-Jan-11	7-Jan-10	0.0083	0.0092
10-Feb-11	9-Feb-11	0.0083	0.009
10-Mar-11	9-Mar-11	0.085	0.0092
10-Apr-11	8-Apr-11	0.0084	0.0094
10-May-11	10-May-10	0.0076	0.0092
10-Jun-11	9-Jun-11	0.0083	0.0092
10-Jul-11	8-Jul-11	0.0083	0.009
10-Aug-11	9-Aug-11	0.0082	0.009
10-Sep-11	6-Sep-11	0.0078	0.0096
10-Oct-11	7-Oct-11	0.0081	0.009
10-Nov-11	9-Nov-11	0.0083	0.0092
10-Dec-11	8-Dec-11	0.0085	0.0096
10-Jan-12	9-Jan-12	0.0084	0.0094
10-Feb-12	9-Feb-12	0.0084	0.0092
10-Mar-12	9-Mar-12	0.0085	0.0104
10-Apr-12	9-Apr-12	0.008	0.0068
10-May-12	10-May-12	0.0086	0.01
10-Jun-12	11-Jun-12	0.0084	0.001
10-Jul-12	13-Jul-12	0.08	0.0098
10-Aug-12	9-Aug-12	0.0074	0.01
10-Sep-12	10-Sep-12	0.0068	0.011
10-Oct-12	10-Oct-12	0.0075	0.0106
10-Nov-12	13-Nov-12	X	X

Mizpah Nursing Home, Inc. Wastewater Treatment Plant (VA0063029)
DMR Data: October 2008 - November 2012
2013 Permit Reissuance

pH			
DMR Due	DMR Rec'd	Maximum	Miniminum
		SU	SU
10-Oct-08	9-Oct-08	8.29	7.73
10-Nov-08	10-Nov-08	8.35	7.19
10-Dec-08	10-Dec-08	8.29	8.02
10-Jan-09	9-Jan-09	8.43	7.93
10-Feb-09	9-Feb-09	8.23	7.08
10-Mar-09	9-Mar-09	8.12	7.88
10-Apr-09	8-Apr-09	8.27	8.03
10-May-09	8-May-09	8.01	7.01
10-Jun-09	9-Jun-09	8.11	7.72
10-Jul-09	9-Jul-09	8.41	7.83
10-Aug-09	10-Aug-09	8.18	7.81
10-Sep-09	10-Sep-09	8.1	7.7
10-Oct-09	9-Oct-09	8.37	7.92
10-Nov-09	10-Nov-09	8.17	7.98
10-Dec-09	14-Dec-09	8.09	7.87
10-Jan-10	8-Jan-10	8.41	7.83
10-Feb-10	9-Feb-10	8.47	8.09
10-Mar-10	9-Mar-10	8.47	8.16
10-Apr-10	7-Apr-10	8.51	7.63
10-May-10	10-May-10	8.47	8.06
10-Jun-10	10-Jun-10	8.35	7.61
10-Jul-10	9-Jul-10	8.4	8.01
10-Aug-10	9-Aug-10	8.47	8.1
10-Sep-10	10-Sep-10	8.42	8.18
10-Oct-10	8-Oct-10	8.4	8.13
10-Nov-10	9-Nov-10	8.52	8.1
10-Dec-10	8-Dec-10	8.48	8.14
10-Jan-11	7-Jan-10	8.28	7.91
10-Feb-11	9-Feb-11	8.97	7.44
10-Mar-11	9-Mar-11	8.49	7.81
10-Apr-11	8-Apr-11	8.47	7.26
10-May-11	10-May-10	8.46	7.81
10-Jun-11	9-Jun-11	8.48	8.02
10-Jul-11	8-Jul-11	8.54	8.09
10-Aug-11	9-Aug-11	8.61	8.16
10-Sep-11	6-Sep-11	8.67	7.46
10-Oct-11	7-Oct-11	8.66	7.69
10-Nov-11	9-Nov-11	8.67	7.63
10-Dec-11	8-Dec-11	8.69	7.42
10-Jan-12	9-Jan-12	7.88	7.38
10-Feb-12	9-Feb-12	7.92	7.16
10-Mar-12	9-Mar-12	8.68	7.29
10-Apr-12	9-Apr-12	8.57	7.61
10-May-12	10-May-12	8.67	7.5
10-Jun-12	11-Jun-12	8.46	7.41
10-Jul-12	13-Jul-12	8.61	8.1
10-Aug-12	9-Aug-12	8.6	7.46
10-Sep-12	10-Sep-12	8.47	8.13
10-Oct-12	10-Oct-12	8.471	8.1
10-Nov-12	13-Nov-12	8.46	8.01
90th percentile		8.67	
10th percentile		8.11	

Total Residual Chlorine			
DMR Due	DMR Rec'd	Mo. Avg.	We. Avg.
		mg/L	mg/L
10-Nov-08	10-Nov-08	0.0023	0.001
10-Dec-08	10-Dec-08	<QL	<QL
10-Jan-09	9-Jan-09	0.005	0.01
10-Feb-09	9-Feb-09	0.02	0.016
10-Mar-09	9-Mar-09	0.004	0.01
10-Apr-09	8-Apr-09	0.002	0.001
10-May-09	8-May-09	<QL	<QL
10-Jun-09	9-Jun-09	<QL	<QL
10-Jul-09	9-Jul-09	<QL	<QL
10-Aug-09	10-Aug-09	<QL	<QL
10-Sep-09	10-Sep-09	<QL	<QL
10-Oct-09	9-Oct-09	0.003	0.01
10-Nov-09	10-Nov-09	<QL	<QL
10-Dec-09	14-Dec-09	<QL	<QL
10-Jan-10	8-Jan-10	<QL	<QL
10-Feb-10	9-Feb-10	<QL	<QL
10-Mar-10	9-Mar-10	<QL	<QL
10-Apr-10	7-Apr-10	0.005	0.02
10-May-10	10-May-10	<QL	<QL
10-Jun-10	10-Jun-10	<QL	<QL
10-Jul-10	9-Jul-10	<QL	<QL
10-Aug-10	9-Aug-10	<QL	<QL
10-Sep-10	10-Sep-10	<QL	<QL
10-Oct-10	8-Oct-10	<QL	0.01
10-Nov-10	9-Nov-10	<QL	0.01
10-Dec-10	8-Dec-10	<QL	0.01
10-Jan-11	7-Jan-10	<QL	0.01
10-Feb-11	9-Feb-11	<QL	0.01
10-Mar-11	9-Mar-11	<QL	<0.010
10-Apr-11	8-Apr-11	<QL	0.01
10-May-11	10-May-10	<QL	0.01
10-Jun-11	9-Jun-11	<QL	0.01
10-Jul-11	8-Jul-11	<QL	0.01
10-Aug-11	9-Aug-11	<QL	0.01
10-Sep-11	6-Sep-11	<QL	0.01
10-Oct-11	7-Oct-11	<QL	0.01
10-Nov-11	9-Nov-11	<QL	0.01
10-Dec-11	8-Dec-11	<QL	0.01
10-Jan-12	9-Jan-12	<QL	0.01
10-Feb-12	9-Feb-12	0	0.01
10-Mar-12	9-Mar-12	0	0.01
10-Apr-12	9-Apr-12	0	0.01
10-May-12	10-May-12	<QL	0.01
10-Jun-12	11-Jun-12	<QL	0.01
10-Jul-12	13-Jul-12	<QL	<0.010
10-Aug-12	9-Aug-12	0.003	0.01
10-Sep-12	10-Sep-12	<QL	0.01
10-Oct-12	10-Oct-12	<QL	0.01
10-Nov-12	13-Nov-12	<QL	<QL

Mizpah Nursing Home, Inc. Wastewater Treatment Plant (VA0063029)

Form 2A: Part A.12 Effluent Testing Information

2013 Permit Reissuance

Outfall Number: 001

Parameter	Maximum Daily Value		Average Daily Value		
	Value	Units	Value	Units	Number of Samples
pH (minimum)	7.16	s.u.			
pH (maximum)	8.6	s.u.			
Flow Rate	0.0102	MGD	0.0082	MGD	365
Temperature (Winter)	NL	°C	17	°C	3
Temperature (Summer)	NL	°C	27.75	°C	4

Pollutant		Maximum Daily Discharge		Average Daily Discharge			Analytical Method	ML/MDL
		Conc.	Units	Conc.	Units	Number of Samples		
CONVENTIONAL AND NON-CONVENTIONAL COMPOUNDS								
Biochemical Oxygen Demand (report one)	BOD-5	5	mg/L	2.8	mg/L	6	SM 5210 B	
	CBOD-5	NL	NL					
Fecal Coliform		8.35	N/100mL	2.23	N/100mL	24	SM 9221 C	
Total Suspended Solids (TSS)		15.5	mg/L	7.83	mg/L	8	2540 D	

Mizpah Nursing Home, Inc. Wastewater Treatment Plant (VA0063029)
Benchsheet Temperature Data: January 2012 - December 2012
2013 Permit Reissuance

	Jan.	Feb.	Mar.	Apr.	May	Jun.	Jul.	Aug.	Sep.	Oct.	Nov.	Dec.
1	17	15	18	19	23	25	27	25	25	22	16	17
2	16	17	14	18	24	23	27	27	25	24	18	17
3	14	16	15	19	21	23	27	27	26	24	19	17
4	13	16	16	20	22	23	29	27	26	24	18	18
5	14	15	13	20	20	21	28	27	26	24	18	18
6	16	14	15	19	24	24	28	28	26	24	17	16
7	15	15	16	18	22	23	27	26	25	23	13	15
8	16	14	17	18	22	24	27	27	25	20	14	18
9	15	14	15	17	22	22	27	27	25	21	14	18
10	15	14	16	17	21	22	27	27	24	21	16	18
11	15	13	16	17	21	24	27	26	24	20	16	18
12	15	13	17	18	20	23	27	26	24	20	19	16
13	14	14	17	18	19	25	26	26	24	20	18	16
14	14	14	17	19	22	24	27	26	24	20	17	15
15	14	16	18	20	24	24	27	27	24	21	16	17
16	14	15	18	22	22	22	27	27	24	20	17	17
17	15	15	18	22	23	22	28	26	23	20	17	17
18	14	14	19	26	25	23	28	26	24	20	17	15
19	14	14	20	22	24	24	27	25	23	20	17	15
20	14	14	19	21	22	25	27	25	23	20	17	17
21	14	14	19	21	22	28	26	26	23	19	17	16
22	14	16	20	22	20	28	26	25	23	21	16	15
23	14	16	20	21	23	25	26	25	22	20	17	14
24	16	16	21	23	25	24	27	25	22	21	16	16
25	15	15	22	21	24	26	27	25	22	20	16	16
26	15	15	21	19	25	25	28	25	22	20	15	14
27	17	18	18	19	27	25	28	26	23	19	16	13
28	15	18	19	21	27	26	27	26	23	18	14	12
29	15	18	20	20	26	27	27	26	23	18	14	14
30	15		19	19	25	27	28	26	23	16	14	14
31	16		19		25		26	26		16		12
Average	**14.8**	**15.1**	**17.8**	**19.9**	**23.0**	**24.2**	**27.1**	**26.1**	**23.9**	**20.5**	**16.3**	**15.8**

90th Percentile (all 2012 data)	**27**

Average (all 2012 data)	**20.4**

VA0063029 - Mizpah Nursing Home, Inc. WWTP
Ambient Stream Data from Monitoring Station 3-RPP010.60 (Rappahannock River)
2013 Permit Reissuance

Collection Date	Depth (m)	Temp (˚C)	pH (SU)	DO Probe (mg/L)	DO Winkler (mg/L)	Fdt DO Optical (mg/L)	Salinity (g/kg)
7/11/1984	3	24		6.2			
7/11/1984	5	24		3.4			
7/11/1984	7	24		3.4			
7/11/1984	9	23.9		2.6			
7/11/1984	11	24		2.2			
7/11/1984	13	24		2.2			
7/11/1984	15			1.6			
7/11/1984	17			1.3			
7/11/1984	19			1.2			
7/11/1984	20.99	24.4		1			
7/11/1984	1	24.4		6.2			
8/9/1984	3	28.62		7.1			
8/9/1984	5	28.47		6.8			
8/9/1984	7	27.8		3.8			
8/9/1984	9	27.34		2.7			
8/9/1984	11	26.86		1.4			
8/9/1984	13	26.47		1.1			
8/9/1984	15	26.36		0.3			
8/9/1984	17	26.07		0.2			
8/9/1984	19	25.95		0.2			
8/9/1984	20.99	25.85		0.2			
8/9/1984	1	28.83		8.2			
8/23/1984	1	26.69	8.1	9.1	7.63		9.84
8/23/1984	2	26.76		6.1			9.82
8/23/1984	4	26.97		2			10.56
8/23/1984	6	27.36		1.2			12.18
8/23/1984	8	27.25		0.4			13.42
8/23/1984	10	26.92		0.4			15.16
8/23/1984	12	26.66		0.4			16.02
8/23/1984	14	26.36		0.3	0.88		17.2
9/10/1984	1	24.47	8.1	6			
9/10/1984	3	24.47		5.95			
9/10/1984	5	24.56		5.65			
9/10/1984	7	24.79		4.95			
9/10/1984	9	24.83		4.4			
9/10/1984	11	24.8		4.4			
9/10/1984	13	24.81		4.2			
9/10/1984	15	24.91		3.45			
9/10/1984	17	25.09		2.7			
9/10/1984	19	25.41		0.8			
9/10/1984	20.99	25.43	8.1	0.7			
9/27/1984	1	21.8	7.8	6.4	6.93		15.7
9/27/1984	3	21.5		6.4			15.7
9/27/1984	5	21.6		6.5			15.7
9/27/1984	7	21.6		4.9			15.8
9/27/1984	8	20.7		5	6.71		15.1
10/9/1984	1	18.69	7.6	9.7	6.1		
10/9/1984	3	18.67		9.6			
10/9/1984	5	18.73		9.45			

VA0063029 - Mizpah Nursing Home, Inc. WWTP
Ambient Stream Data from Monitoring Station 3-RPP010.60 (Rappahannock River)
2013 Permit Reissuance

Collection Date	Depth (m)	Temp (˚C)	pH (SU)	DO Probe (mg/L)	DO Winkler (mg/L)	Fdt DO Optical (mg/L)	Salinity (g/kg)
10/9/1984	7	18.67		8.8			
10/9/1984	9	18.56		8.5			
10/9/1984	11	18.69		7.05			
10/9/1984	13	18.71		6.65			
10/9/1984	15	18.75		6.05			
10/9/1984	17	18.76		5.9			
10/9/1984	19	18.78		5.75			
10/9/1984	20.99	18.79		5.05	4.9		
10/31/1984	3	20.5		7.5			16.5
10/31/1984	5	20.4		6.2			16.8
10/31/1984	7	20.4		7.4			17.8
10/31/1984	9	19.8		7.3			18.48
10/31/1984	11	19.74		7.5			19.18
10/31/1984	13	19.71		7.7			18.89
10/31/1984	15	19.68		7.8	6.15		19.79
10/31/1984	1	20.6	7.9	8	8.65		16.46
11/9/1984	3	15.7		7.6			17.5
11/9/1984	5	16		8.8			17.5
11/9/1984	7	16		9			17.4
11/9/1984	9	16		9.1			17.6
11/9/1984	11	15.3		9			17.9
11/9/1984	13	15	7.1	8.9	7.74		18.1
11/9/1984	1	15.8	5.4	7.7	8.24		17
12/10/1984	1	6.81	7.6	11.4	11.55		17.21
12/10/1984	3	6.82		11.3			17.32
12/10/1984	5	6.91		11			17.55
12/10/1984	7	6.96		10.7			18.29
12/10/1984	9	6.97		10.5			19.03
12/10/1984	11	7		10.5			19.36
12/10/1984	13	7.07		10.4			19.28
12/10/1984	15	7.03		10.4			19.48
12/10/1984	17	7.03		10.3			19.6
12/10/1984	19	7.07	7.3	10.2	10.1		19.66
2/7/1985	1	0.8	8	15.3	14		
2/7/1985	3	0.9		15.2			
2/7/1985	5	0.9		15.3			
2/7/1985	7	0.9		15.2			
2/7/1985	9	0.9	7.3	15.2	13.7		
3/7/1985	1	6.56	7.6	11.2	11.1		15.58
3/7/1985	3	6.68		11.3			15.7
3/7/1985	5	6.69		11.4			15.96
3/7/1985	7	6.41		11.4			16.3
3/7/1985	9	5.06		11.4			16.98
3/7/1985	11	4.94		11.4			17.02
3/7/1985	13	5.29	7.6	11.4	11.3		17.06
3/20/1985	1	7.5	8.7	11.6	12.6		15.9
3/20/1985	3	7.5		11.6			15.8
3/20/1985	5	7.5		11.5			15.9
3/20/1985	7	7.4		11.4			15.9

VA0063029 - Mizpah Nursing Home, Inc. WWTP
Ambient Stream Data from Monitoring Station 3-RPP010.60 (Rappahannock River)
2013 Permit Reissuance

Collection Date	Depth (m)	Temp (˚C)	pH (SU)	DO Probe (mg/L)	DO Winkler (mg/L)	Fdt DO Optical (mg/L)	Salinity (g/kg)
3/20/1985	9	7.4	8.5	11.1	9		16.1
4/8/1985	1	11.69	8.3	10.1	10.1		16.28
4/8/1985	3	11.59		10			16.25
4/8/1985	5	11.62		10			16.33
4/8/1985	7	11.68		9.8			16.94
4/8/1985	9	11.76	8.8	9.88	10.2		16.87
4/18/1985	1	14.71	7.6	9.55			14.95
4/18/1985	3	14.76		9.5			15
4/18/1985	5	14.84		9.3			15.2
4/18/1985	7	14.33		8.9			15.7
4/18/1985	9	14.03		8.85			15.9
4/18/1985	11	13.79		8.9			16
4/18/1985	13	13.6		8.9			16.1
4/18/1985	15	13.53		8.85			16.1
4/18/1985	17	13.4		8.8			16.2
4/18/1985	19	13.82		8.8			16
4/18/1985	20.99	13.49	7.8	8.75			16
5/6/1985	0.3	17.9	7.4		7.6		
5/6/1985	1	17.88	7.4	7.6	7.8		16.47
5/6/1985	3	17.97		7.6			16.52
5/6/1985	5	17.89		7.6			16.5
5/6/1985	7	17.87		7.5			16.46
5/6/1985	9	17.84		7.4			16.49
5/6/1985	10	17.84	7.1	7.4	7.5		16.58
5/16/1985	1	21.16	7.8	7.5			16.74
5/16/1985	3	20.62		7.6			17.06
5/16/1985	5	20.6		7.5			17.1
5/16/1985	7	20.52		7.1			17.02
5/16/1985	9	20.08		6.4			17.29
5/16/1985	11	18.1		5			18.1
5/16/1985	13	18.1		5.1			18.6
5/16/1985	15	17.84		5.2			18.8
5/16/1985	17	17.88	7.5	5.2			19.28
6/3/1985	1	22.9	7.9	7.6	9.1		16.72
6/3/1985	3	22.7		6.7			16.7
6/3/1985	5	22.48		5.4			16.9
6/3/1985	7	21.81		5.5			17.14
6/3/1985	9	21.88		5.2			17.3
6/3/1985	11	21.62		4.8			17.72
6/3/1985	13	21.3		4.6			18.24
6/3/1985	15	21.18		4.5			19
6/3/1985	17	21.1		4.5			19
6/3/1985	18	21.02	7.79	4.5	5.3		19.1
6/18/1985	1	24	6.8	6	6.4		16.98
6/18/1985	3	24		5.9			17
6/18/1985	5	24		5.8			17.06
6/18/1985	7	23.86		5.7			17.1
6/18/1985	9	23.26		3.6			19.13
6/18/1985	11	23.1		3.1			19.58

VA0063029 - Mizpah Nursing Home, Inc. WWTP
Ambient Stream Data from Monitoring Station 3-RPP010.60 (Rappahannock River)
2013 Permit Reissuance

Collection Date	Depth (m)	Temp (˚C)	pH (SU)	DO Probe (mg/L)	DO Winkler (mg/L)	Fdt DO Optical (mg/L)	Salinity (g/kg)
6/18/1985	13	23.02		3.1			19.8
6/18/1985	15	23		3.2			19.93
6/18/1985	17	23		2.9			20.38
6/18/1985	19	29.98		2.8			20.5
6/18/1985	20.99	22.94		2.7			20.6
6/18/1985	22.99	22.9	6.6	2.6	3		20.7
7/1/1985	1	24.3	8.1	6.53	6.2		18.48
7/1/1985	3	24.4		6.56			18.6
7/1/1985	5	24.3		6.06			18.56
7/1/1985	7	24.2		6.06			18.7
7/1/1985	9	24.1	8.6	6.35	7.3		18.6
7/23/1985	1	26.6	7.82	6.8	5.3		17.25
7/23/1985	3	26.93		6.6			17.2
7/23/1985	5	26.89		6.3			17.1
7/23/1985	7	26.83		5.8			17.1
7/23/1985	9	26.72		4			17.2
7/23/1985	11	26.58		2.5			17.4
7/23/1985	13	26.32		1.6			17.6
7/23/1985	15	26.18		1.2			17.7
7/23/1985	17	26.08		1			17.7
7/23/1985	19	26.08		1.8			17.8
7/23/1985	20.99	26.29		3			18.1
7/23/1985	21.99		7.42	3	1.8		18.1
8/1/1985	1	27.3	7.72	6.3	6.4		19.2
8/1/1985	3	26.9		6.3			19.3
8/1/1985	5	26.8		6.1			19.2
8/1/1985	7	26.5		5.2			19.7
8/1/1985	9	26.4	7.58	4.2	4.1		20.2
8/14/1985	1	27.8	8.09	7.3	7.6		19.32
8/14/1985	3	27.8		7.2			19.32
8/14/1985	5	27.68		6.8			19.32
8/14/1985	7	27.01		4.5			19.96
8/14/1985	9	26.64		3.7			20.26
8/14/1985	11	26.32		2.8			20.94
8/14/1985	13	26.11		2.3			21.22
8/14/1985	15	25.91		1.8			21.62
8/14/1985	17	25.8		1.6			21.92
8/14/1985	19	25.81		1.6			22
8/14/1985	20.99	25.78		1.6			22.12
8/14/1985	22.99	25.73	7.16	1.4	1.3		22.24
9/3/1985	1	26.52	7.68	6.8	6.96		19.12
9/3/1985	3	26.44		6.6			19.14
9/3/1985	5	26.44		6.3			19.21
9/3/1985	7	26.42		5.7			19.22
9/3/1985	8	26.48	6.49	5	5.09		19.8
9/16/1985	1	24.67	7.9	4.9	5.35		19.48
9/16/1985	3	24.68		4.9			19.5
9/16/1985	5	24.76		4.8			19.47
9/16/1985	7	24.78		4.8			19.48

VA0063029 - Mizpah Nursing Home, Inc. WWTP
Ambient Stream Data from Monitoring Station 3-RPP010.60 (Rappahannock River)
2013 Permit Reissuance

Collection Date	Depth (m)	Temp (˚C)	pH (SU)	DO Probe (mg/L)	DO Winkler (mg/L)	Fdt DO Optical (mg/L)	Salinity (g/kg)
9/16/1985	9	24.75		4.7			19.6
9/16/1985	11	24.85		4.7			19.57
9/16/1985	13	23.02		4.7			20.68
9/16/1985	15	21.86		4.6			20.74
9/16/1985	17	22.04		4.7			20.66
9/16/1985	18	22.38	7.77	4.7	5.03		20.48
10/1/1985	1	22.18	7.82	7.2	7.5		18.35
10/1/1985	3	22.1		7.1			18.35
10/1/1985	5	22.1		7.1			18.25
10/1/1985	7	22.3		7			19.1
10/1/1985	9	22.25		6.1			19.5
10/1/1985	11	22.4		5.9			19.88
10/1/1985	13	22.25		5.8			19.8
10/1/1985	15	22.1		5.7			19.89
10/1/1985	17	22.05		5.6			19.95
10/1/1985	19	22.15	7.59	5.6	5.6		20.25
10/15/1985	1	21	7.51	6.3	6.4		21
10/15/1985	3	21.2		6.3			21
10/15/1985	5	21		6.3			21
10/15/1985	7	21		6.3			21
10/15/1985	9	21	7.75	6.4			21.38
11/14/1985	1	16.46	7.09	8.3	8.77		15.58
11/14/1985	3	16		7			18.2
11/14/1985	5	16		6.8			19.48
11/14/1985	7	15.94		6.5			20.8
11/14/1985	9	15.96		6.7			21.2
11/14/1985	11	16		6.8			21.16
11/14/1985	13	15.96		6.8			21.3
11/14/1985	15	16		6.9			21.4
11/14/1985	17	15.98		6.9			21.4
11/14/1985	19	15.98		7.2			21.5
11/14/1985	19.99	15.92	7.46	7.4	7.98		21.46
12/16/1985	1	8.14	8.97	9.6	8.6		17
12/16/1985	3	8.16		9.5			16.88
12/16/1985	5	8.42		9.5			17.1
12/16/1985	7	8.48		9.4			17.24
12/16/1985	9	8.6	8.8	9.4	7.34		17.42
1/22/1986	1	2.92	8.39	12.6	12.98		16.36
1/22/1986	3	3		12.5			16.72
1/22/1986	5	3.06		12.4			17.12
1/22/1986	7	3.02		12.2			17.08
1/22/1986	9	2.99		11.9			18.49
1/22/1986	11	2.89	8.44	11.9	11.71		18.72
2/18/1986	1	3.09	8.36	14.2	13.3		15.32
2/18/1986	3	2.88		13.8			15.68
2/18/1986	5	2.78		13.3			16
2/18/1986	7	2.24		13			17.31
2/18/1986	9	2.46		12.6			18.1
2/18/1986	11	2.5	8.2	12.5	11.67		18.54

VA0063029 - Mizpah Nursing Home, Inc. WWTP
Ambient Stream Data from Monitoring Station 3-RPP010.60 (Rappahannock River)
2013 Permit Reissuance

Collection Date	Depth (m)	Temp (˚C)	pH (SU)	DO Probe (mg/L)	DO Winkler (mg/L)	Fdt DO Optical (mg/L)	Salinity (g/kg)
3/11/1986	1	4.5	8.04	12.1	12.23		15.05
3/11/1986	3	4.7		12			15.2
3/11/1986	5	4.6		12			15.1
3/11/1986	7	4.4		12.3			15
3/11/1986	9	4.7		12.2			15.2
3/11/1986	11	3.8		11.9			16.04
3/11/1986	13	3.7		11.6			16.9
3/11/1986	15	3.49		11.4			16.8
3/11/1986	17	3.5		11.2			17.3
3/11/1986	19	3.6		11.2			17.3
3/11/1986	20.99	3.7	7.83	11.1	10.73		17.59
3/25/1986	1	8.23	8.7	11.4	12.1		13.9
3/25/1986	3	8.71		11.1			14.24
3/25/1986	5	8.6		11			14.35
3/25/1986	7	8.38		10.8			14.83
3/25/1986	9	7.94		10.5			15.46
3/25/1986	11	7.48		10.4			15.7
3/25/1986	13	7.33		10.3			15.9
3/25/1986	15	7.32		10.3			15.8
3/25/1986	17	7.18		10.2			15.94
3/25/1986	19	6.84		10.2			16.1
3/25/1986	20.99	6.1		10.1			16.56
3/25/1986	22.99	5.7		10.1			15.3
3/25/1986	24.99	5.56		10.2			14.48
3/25/1986	25.99	5.58	8.6	10.3	8.65		15.18
4/9/1986	1	13.62	8.4	11.4	11.2		13.98
4/9/1986	3	13.56		11.3			14
4/9/1986	5	13.64		11.3			14.06
4/9/1986	7	13.57		11.2			14.07
4/9/1986	9	12.88		10.9			14.47
4/9/1986	11	12.47		10.6			14.82
4/9/1986	13	12.14	7.82	10.5	10.81		14.74
4/24/1986	1	12.16	8.13	9.3	9.49		13.78
4/24/1986	3	12.09		9.2			13.88
4/24/1986	5	11.89		9.2			13.8
4/24/1986	7	12.27		9.2			13.84
4/24/1986	9	12.14		9.1			14.09
4/24/1986	11	12.19		9.1			14.04
4/24/1986	13	12.28		8.8			15.66
4/24/1986	15	12.32		8.8			15.38
4/24/1986	17	12.39		8.8			15.32
4/24/1986	19	12.12	8.02	8.6	8.77		15.7
5/7/1986	1	17.12	8.18	10.4	9.9		13.38
5/7/1986	3	16.72		10.2			13.54
5/7/1986	5	16.32		10.4			13.71
5/7/1986	7	15.71		8.6			14.51
5/7/1986	9	15.04		8.7			15.46
5/7/1986	11	14.19		8.2			17.84
5/7/1986	13	14.05		7.9			18.56

VA0063029 - Mizpah Nursing Home, Inc. WWTP
Ambient Stream Data from Monitoring Station 3-RPP010.60 (Rappahannock River)
2013 Permit Reissuance

Collection Date	Depth (m)	Temp (˚C)	pH (SU)	DO Probe (mg/L)	DO Winkler (mg/L)	Fdt DO Optical (mg/L)	Salinity (g/kg)
5/7/1986	15	13.94		7.8			19
5/7/1986	17	13.83		7.7			19.14
5/7/1986	19	13.72		7.6			19.53
5/7/1986	19.99	13.84	7.75	7.6	6.43		19.44
5/22/1986	1	20.41	7.82	8.1	7.98		14.65
5/22/1986	3	20.38		8			14.64
5/22/1986	5	19.8		7.6			14.85
5/22/1986	7	17.87		6.4			16.4
5/22/1986	9	16.85		6.4			17.86
5/22/1986	11	16.45		6.1			18.2
5/22/1986	13	16.36		6			18.24
5/22/1986	15	16.27		5.9			18.39
5/22/1986	17	16.14		5.9			18.38
5/22/1986	19	16.14		5.9			18.39
5/22/1986	20.99	16.13		5.9			18.42
5/22/1986	22.99	16.09	7.15	5.8	5.34		18.5
6/5/1986	1	22.83	7.52	7.7	7.9		15.44
6/5/1986	3	22.81		7.6			15.48
6/5/1986	5	22.85		7.4			15.47
6/5/1986	7	22.84		6.6			15.58
6/5/1986	9	21.94		4.4			15.88
6/5/1986	11	20.97		3.3			16.64
6/5/1986	13	20.25		2.9			17.38
6/5/1986	15	20.05		2.9			18.01
6/5/1986	17	19.95		2.8			18.57
6/5/1986	19	19.97		2.8			18.7
6/5/1986	20.99	20.05		2.8			19.07
6/5/1986	21.99	20.04	7.22	2.8	2.24		19.18
6/23/1986	1	24.64	7.8	7.9	7.01		17.59
6/23/1986	3	24.56		7.8			17.58
6/23/1986	5	24.58		7.6			17.54
6/23/1986	7	24.68		7.5			17.59
6/23/1986	9	24.6		6.8			17.85
6/23/1986	11	24.34		5.1			18.35
6/23/1986	13	24.4		2.9			18.6
6/23/1986	15	24.12		2.2			18.88
6/23/1986	17	24.03		1.8			18.91
6/23/1986	19	24		1.4			19.12
6/23/1986	19.99	24.18	7.15	1.5	0.86		19.15
7/7/1986	1	26.38	7.79	6.9	7		17.78
7/7/1986	3	26.36		6.8			17.94
7/7/1986	5	26.42		6.6			17.9
7/7/1986	7	25.7		4.2			18.1
7/7/1986	9	25.4		3.6			18.5
7/7/1986	11	25.3		3.4			18.7
7/7/1986	13	25.2		3.8			19.1
7/7/1986	15	25.1		3.7			19.6
7/7/1986	17	24.9		3.6			20.1
7/7/1986	19	24.9		3.5			20.4

VA0063029 - Mizpah Nursing Home, Inc. WWTP
Ambient Stream Data from Monitoring Station 3-RPP010.60 (Rappahannock River)
2013 Permit Reissuance

Collection Date	Depth (m)	Temp (˚C)	pH (SU)	DO Probe (mg/L)	DO Winkler (mg/L)	Fdt DO Optical (mg/L)	Salinity (g/kg)
7/7/1986	19.99	24.9	7.58	3.5	3.6		20.4
7/21/1986	1	28.54	7.97	5.2	5.15		
7/21/1986	3	28.55		5.2			18.43
7/21/1986	5	28.45		5.1			18.47
7/21/1986	7	28.48		4.8			18.48
7/21/1986	9	28.55		4.8			18.47
7/21/1986	11	28.47		4.6			18.55
7/21/1986	13	28.31		4.3			18.67
7/21/1986	15	28.27		3.8			18.66
7/21/1986	17	27.9		3.3			18.76
7/21/1986	19	27.68		1.9			19.13
7/21/1986	19.99	27.62	7.11	1.8	2.51		19.1
8/5/1986	1	28.48	7.23	6.4			19.24
8/5/1986	3	28.5		6.3			19.26
8/5/1986	5	28.49		5.5			19.26
8/5/1986	7	28.35		2.9			19.65
8/5/1986	9	28.08		1.8			19.96
8/5/1986	11	27.53		0.2			21.24
8/5/1986	13	27.12		0.2			21.74
8/5/1986	15	27.06		0.2			21.87
8/5/1986	17	29.05		0.3			21.93
8/5/1986	19	26.94		0.2			22.04
8/5/1986	20.99	26.92		0.2			21.98
8/5/1986	21.99	26.92	7.85	0.2			22.03
8/19/1986	1	27.18	7.81	5.2	5.49		19.72
8/19/1986	3	27.1		4.9			20.1
8/19/1986	5	27.08		4.2			20.08
8/19/1986	7	27.26		4.8			20.2
8/19/1986	9	27.24		4.8			20.16
8/19/1986	11	27.36		4.8			20.3
8/19/1986	13	27.26		4.7			20.22
8/19/1986	15	27.28		4.6			20.3
8/19/1986	17	27.38		4.5			20.32
8/19/1986	19	27.32		4.3			20.38
8/19/1986	20.99	27.24	7.47	4	6.6		20.42
9/10/1986	1	23.52		6	6.16		19.61
9/10/1986	3	23.56		6			19.64
9/10/1986	5	23.53		6			19.61
9/10/1986	7	23.54		5.9			19.63
9/10/1986	9	23.64		5.7			19.76
9/10/1986	11	23.8		5.5			19.92
9/10/1986	13	23.82		5.6			19.92
9/10/1986	15	23.8		5.6			19.98
9/10/1986	17	23.78		5.6			19.92
9/10/1986	19	23.76		5.6			19.96
9/10/1986	20.99	23.8		5.5			19.92
9/10/1986	22.99	23.8		5.5	5.63		19.96
9/22/1986	1	22.9	7.41	6.8	6.6		20.25
9/22/1986	3	23.1		6.8			20.21

VA0063029 - Mizpah Nursing Home, Inc. WWTP
Ambient Stream Data from Monitoring Station 3-RPP010.60 (Rappahannock River)
2013 Permit Reissuance

Collection Date	Depth (m)	Temp (˚C)	pH (SU)	DO Probe (mg/L)	DO Winkler (mg/L)	Fdt DO Optical (mg/L)	Salinity (g/kg)
9/22/1986	5	22.84		5.9			20.39
9/22/1986	7	22.7		5.5			20.47
9/22/1986	9	22.62		5.6			20.46
9/22/1986	11	22.55		5.4			20.6
9/22/1986	13	22.44		5.4			20.58
9/22/1986	15	22.55		5.3			20.64
9/22/1986	17	22.48		5.2			20.7
9/22/1986	19	22.5		5.2			20.68
9/22/1986	20.99	22.5		5.2			20.67
9/22/1986	22.99	22.4	7.47	5.2	5		20.66
10/6/1986	1	24.23	7.73	5.9			20.56
10/6/1986	3	24.35		5.8			20.57
10/6/1986	5	24.25		5.8			20.5
10/6/1986	7	24.31		5.7			20.6
10/6/1986	9	24.27		5.7			20.55
10/6/1986	11	24.29		5.7			20.61
10/6/1986	13	24.6		4.9			21.35
10/6/1986	15	24.35		4.3			21.79
10/6/1986	17	24.26		4.1			22
10/6/1986	19	24.28		3.8			22.19
10/6/1986	19.99	24.2	7.46	3.8	3.71		22.12
10/27/1986	1	17.57		9.4	8.56		20.49
10/27/1986	3	17.4		9.1			20.54
10/27/1986	5	17.5		8.9			20.39
10/27/1986	7	17.35		8.7			20.64
10/27/1986	9	17.3		8.7			20.62
10/27/1986	11	17.34		8.6			20.66
10/27/1986	13	17.35		8.6			20.6
10/27/1986	15	17.26		8.6			20.64
10/27/1986	17	17.17		8.4			20.48
10/27/1986	19	17.32		8.3			20.68
10/27/1986	19.99	17.35		8.4	7.49		20.61
11/24/1986	1	10.7	7.61	9	9.06		20.38
11/24/1986	3	10.57		8.8			20.59
11/24/1986	5	10.78		8.6			21.24
11/24/1986	7	10.84		8.5			21.08
11/24/1986	9	10.79		8.5			21.43
11/24/1986	11	10.76		8.5			21.63
11/24/1986	13	10.78		8.5			21.01
11/24/1986	15	10.77		8.6			21.42
11/24/1986	17	10.63		8.5			21.55
11/24/1986	19	10.72		8.5			21.56
11/24/1986	19.99	10.8	7.79	8.9	8.6		14.98
12/15/1986	1	7.04	7.96	12	10.7		19.77
12/15/1986	3	7.06		12			19.58
12/15/1986	5	7.11		12			19.63
12/15/1986	7	7.34		11.9			19.61
12/15/1986	9	7.58		11.9			19.78
12/15/1986	11	7.76		11.7			20.01

VA0063029 - Mizpah Nursing Home, Inc. WWTP
Ambient Stream Data from Monitoring Station 3-RPP010.60 (Rappahannock River)
2013 Permit Reissuance

Collection Date	Depth (m)	Temp (˚C)	pH (SU)	DO Probe (mg/L)	DO Winkler (mg/L)	Fdt DO Optical (mg/L)	Salinity (g/kg)
12/15/1986	13	7.8		11.6			20.1
12/15/1986	15	7.91		11.6			20.99
12/15/1986	17	7.88		11.6			20.04
12/15/1986	19	7.89		11.5			20.04
12/15/1986	20.99	7.91		11.5			20
12/15/1986	21.99	8	8.08	11.5	9.5		20
1/5/1987	1	4.7		10.6	11.12		
1/5/1987	3	4.7		10.5			
1/5/1987	5	4.9		10.4			
1/5/1987	7	5.2		10.2			
1/5/1987	9	5.5		10.2			
1/5/1987	11	5.5		10.1			
1/5/1987	13	5.6		10.1			
1/5/1987	15	5.6		10			
1/5/1987	17	5.6		9.9			
1/5/1987	19	5.7		9.9	10.37		
3/3/1987	0.3	6	7.97		12.7		
3/3/1987	1	6	7.97	12.7	12.32		15.1
3/3/1987	9	5		12.4			15.9
3/3/1987	18	6	8.19	11.2	11.52		27
3/17/1987	1	5	8.57		12.05		13.9
3/17/1987	7	5					19.3
3/17/1987	14	5	8.01		10.83		24
3/31/1987	0.3	11	8.48		12.6		
3/31/1987	1	11	8.48	12.6	10.96		15
3/31/1987	3	11		12.6			15
3/31/1987	5	11		12.9			15.5
3/31/1987	7	10.5		12.9			15.5
3/31/1987	9	11		13			15.5
3/31/1987	10	10.7	8.62	13	10.93		15.5
4/15/1987	1	12.9	9.62	11.2	11.04		15
4/15/1987	3	12.9		11.2			15.1
4/15/1987	5	12.1		11.2			15.5
4/15/1987	7	11.5		10.6			16
4/15/1987	9	11		10.5			16.1
4/15/1987	11	10.5	9.37	9.8	9.19		16.9
4/30/1987	1	13.73		9.3	8.62		12.34
4/30/1987	3	13.73		9.2			12.3
4/30/1987	5	13.7		9.2			12.34
4/30/1987	7	13.74		9			12.52
4/30/1987	9	13.66		8.8			12.72
4/30/1987	11	13.26		8.7			13.2
4/30/1987	13	13.1		8.6			13.86
4/30/1987	15	12.91					14.23
4/30/1987	17	12.78					14.63
4/30/1987	18	12.74	8.94		8.94		14.73
5/14/1987	1	17.9	8.75	9.5	9.89		11.82
5/14/1987	3	17.76		9.3			11.82
5/14/1987	5	17.76		9.3			11.86

VA0063029 - Mizpah Nursing Home, Inc. WWTP
Ambient Stream Data from Monitoring Station 3-RPP010.60 (Rappahannock River)
2013 Permit Reissuance

Collection Date	Depth (m)	Temp (˚C)	pH (SU)	DO Probe (mg/L)	DO Winkler (mg/L)	Fdt DO Optical (mg/L)	Salinity (g/kg)
5/14/1987	7	16.46		6.8			13.36
5/14/1987	9	14.5		4.4			15.38
5/14/1987	10	14.24	7.82	3.8	4.05		16.06
6/2/1987	0.61	19.3	8.34		5.6		
6/2/1987	1	23.64	8.34	8.2	7.43		12.61
6/2/1987	3	23.29		7.7			12.8
6/2/1987	5	20.13		6.3			16.11
6/2/1987	7	19.62		5.9			16.65
6/2/1987	9	19.34		5.5			17.29
6/2/1987	11	19.13		5.6			17.56
6/2/1987	13	19.06		5.4			17.69
6/2/1987	15	18.87		5.4			17.88
6/2/1987	17	18.87		5			18.96
6/2/1987	19	18.77		5			18.06
6/2/1987	20.99	18.78		4.9			18.11
6/2/1987	21.99	18.83	8.27	4.9	3.69		18.04
6/16/1987	1	25.23	7.89	8.1	7.71		14.47
6/16/1987	3	24.67		7			14.84
6/16/1987	5	24.5		6.2			15.24
6/16/1987	7	23.88		2.4			16.04
6/16/1987	9	23.14		1.8			17.13
6/16/1987	11	23.17	7.57	1.8	1.34		17.2
6/30/1987	1	25.98	7.83	7.5	6.93		15.59
6/30/1987	3	25.98		7.1			15.67
6/30/1987	5	25.97		6.5			15.79
6/30/1987	7	25.48		2.7			16.89
6/30/1987	9	25.07		1.6			17.79
6/30/1987	11	24.98		1.1			18.08
6/30/1987	13	24.88		1			18.2
6/30/1987	15	24.77		0.8			18.38
6/30/1987	17	24.78		0.7			18.41
6/30/1987	19	24.82	7.21	0.7	1.1		18.45
7/14/1987	1	28.88	7.9	7	6.12		16.77
7/14/1987	3	28.97		6.7			16.75
7/14/1987	5	28.77		6.3			17.02
7/14/1987	7	28.46		4.1			17.38
7/14/1987	9	27.88		2.5			17.7
7/14/1987	11	27.61		2.4			17.84
7/14/1987	13	27.55		2.2			17.82
7/14/1987	14	27.56	7.28	2.4	1.84		17.91
8/10/1987	0.61	28.5	7.35		6.7		
8/10/1987	1	28.62	7.35	7.2	4.72		18.18
8/10/1987	3	28.66		6.8			18.12
8/10/1987	5	28.6		7			18.16
8/10/1987	7	28.6		6.7			18.1
8/10/1987	9	28.57		6.7			18.14
8/10/1987	11	28.64		6.5			18.18
8/10/1987	13	28.67		6.3			18.3
8/10/1987	15	28.62		5			18.54

VA0063029 - Mizpah Nursing Home, Inc. WWTP
Ambient Stream Data from Monitoring Station 3-RPP010.60 (Rappahannock River)
2013 Permit Reissuance

Collection Date	Depth (m)	Temp (˚C)	pH (SU)	DO Probe (mg/L)	DO Winkler (mg/L)	Fdt DO Optical (mg/L)	Salinity (g/kg)
8/10/1987	17	28.56		3.4			18.92
8/10/1987	19	28.54	7.48	3.8	1.7		18.9
8/24/1987	1	27.18	7.92	6.8	5.31		18.66
8/24/1987	3	27.16		6.8			18.68
8/24/1987	5	27.2		6.9			18.7
8/24/1987	7	27.14		6.9			18.62
8/24/1987	9	27.04		6.9			18.72
8/24/1987	10	27.13	7.66	6.7	5.14		18.71
9/8/1987	0.61	25	7.69		5.6		
9/8/1987	1	25.03	7.69	5.6	5.7		18.89
9/8/1987	3	25.06		5.6			18.92
9/8/1987	5	25		5.5			18.92
9/8/1987	7	25.1		5.3			18.95
9/8/1987	9	25.05		5.3			18.9
9/8/1987	11	25.1	7.46	5.2	5.32		19.2
9/23/1987	1	23.74	7.25	6.7	1.73		16.68
9/23/1987	3	23.8		6.6			16.82
9/23/1987	5	24.32		5.8			17.48
9/23/1987	7	25.16		2.1			20.35
9/23/1987	9	25.27		1.5			20.38
9/23/1987	10	25.34	7.05	1.4	1.58		20.43
10/7/1987	0.61	18.8			8.9		
10/7/1987	1	18.7		8.9	8.72		18.32
10/7/1987	3	18.78		8.9			18.33
10/7/1987	5	18.82		8.7			18.46
10/7/1987	7	18.92		8.6			18.78
10/7/1987	9	18.94		8.6			18.91
10/7/1987	11	18.91	8.05	8.2	9.33		19.33
10/26/1987	1	14.9		7.7	8.34		18.64
10/26/1987	3	14.85		7.7			18.61
10/26/1987	5	14.84		7.6			18.7
10/26/1987	7	14.79		7.6			18.68
10/26/1987	9	14.77		7.6			18.8
10/26/1987	10	14.84	7.63	7.5	8.24		18.79
11/5/1987	0.61	14.9	7.48		9.4		
11/5/1987	1	14.88	7.48	9.4	9.68		18.6
11/5/1987	3	14.79		9.4			18.68
11/5/1987	5	14.91		9.3			18.69
11/5/1987	7	14.64		8.9			19.01
11/5/1987	9	14.58		8.6			19.26
11/5/1987	11	14.56		8.6			19.46
11/5/1987	13	14.49		8.2			19.5
11/5/1987	15	14.64		8.2			19.59
11/5/1987	17	14.5		8.2			19.53
11/5/1987	19	14.47		8.2			19.54
11/5/1987	20.99	14.41		8.2			19.61
11/5/1987	22.99	14.52	7.51	8.1	7.78		19.49
12/8/1987	0.61	7.3	7.5		9.7		
1/25/1988	0.61	2.2	8.78		12.7		

VA0063029 - Mizpah Nursing Home, Inc. WWTP
Ambient Stream Data from Monitoring Station 3-RPP010.60 (Rappahannock River)
2013 Permit Reissuance

Collection Date	Depth (m)	Temp (˚C)	pH (SU)	DO Probe (mg/L)	DO Winkler (mg/L)	Fdt DO Optical (mg/L)	Salinity (g/kg)
4/11/1988	0.3	12.9	8.61		10.8		
6/30/1988	1	23.6	7.67	9.38	5.9		14
6/30/1988	3	23.8		9.39			14
6/30/1988	5	23.8		9.15			14.2
6/30/1988	7	24		8.29			14.7
6/30/1988	9	23.6	7.67	6.32	3.13		15.9
7/19/1988	1	27.84	8	6.38			17.4
7/19/1988	3	27.84		6.32			17.4
7/19/1988	5	27.81		6.34			17.4
7/19/1988	7	26.71		2.86			18
7/19/1988	9	26		1.54			18.6
7/19/1988	11	25.76		1.32			18.7
7/19/1988	12	25.63	7.2	1.33			18.7
8/2/1988	1	28.18	8.03	6.33	6.7		18.7
8/2/1988	3	28.19		5.37			18.7
8/2/1988	5	28.08		4.34			18.6
8/2/1988	7	27.94		3.36			19
8/2/1988	9	27.69		2.38			19
8/2/1988	11	27.61		2.04			19
8/2/1988	13	27.56		1.93			19
8/2/1988	15	27.48		1.67			19.1
8/2/1988	17	27.28		1.22			19.2
8/2/1988	19	27.18		1.02			19.2
8/2/1988	20.99	27.16	7.33	0.92	1.33		19.3
8/16/1988	1	28.77	7.76	5.54	5.54		19
8/16/1988	3	28.7		5.48			19
8/16/1988	5	28.75		5.5			19
8/16/1988	7	28.54		3.34			19.1
8/16/1988	9	28.1		1.89			20.9
8/16/1988	10	27.96	7.31	1.4	1.52		21.1
9/13/1988	1	23.53	7.84	6.56	6.91		20.2
9/13/1988	3	23.52		6.46			20.2
9/13/1988	5	23.53		6.27			20.1
9/13/1988	7	23.6		5.8			20.6
9/13/1988	9	23.55		5.16			20.2
9/13/1988	10	23.56	7.6	5.17	5.53		20.1
9/28/1988	1	22.28	7.68	5.88	6.49		20.2
9/28/1988	3	22.3		5.75			20.3
9/28/1988	5	22.3		5.76			20.3
9/28/1988	7	22.29		7.25			20.3
9/28/1988	8	22.26	7.66	7.3	6.29		20.3
10/12/1988	1	18.22	7.82	7.18	7.61		21.1
10/12/1988	3	18.23		7.16			21.2
10/12/1988	5	18.22		7.16			21.1
10/12/1988	7	18.23		7.15			21.2
10/12/1988	9	18.23		7.16			21.2
10/12/1988	11	18.22	7.78	7.16	7.52		22.1
10/27/1988	1	14.17	7.84	7.88	8.87		22.8
10/27/1988	3	14.16		7.91			22.8

VA0063029 - Mizpah Nursing Home, Inc. WWTP
Ambient Stream Data from Monitoring Station 3-RPP010.60 (Rappahannock River)
2013 Permit Reissuance

Collection Date	Depth (m)	Temp (˚C)	pH (SU)	DO Probe (mg/L)	DO Winkler (mg/L)	Fdt DO Optical (mg/L)	Salinity (g/kg)
10/27/1988	5	14.18		7.91			22.8
10/27/1988	7	14.46		7.81			23
10/27/1988	9	14.56		7.54			23.5
10/27/1988	10	14.53	7.77	7.47	8.37		23.5
11/15/1988	1	12.09	7.98	9.38	9.68		20.3
11/15/1988	3	12.11		9.31			20.4
11/15/1988	5	12.25		8.99			20.6
11/15/1988	7	12.5		8.56			21.1
11/15/1988	9	12.54		8.23			21.4
11/15/1988	10	12.5	7.88	8.3	8.88		21.5
12/14/1988	1	5.22	7.76	10.48			21.7
12/14/1988	3	5.55		10.34			22
12/14/1988	5	5.78		10.26			22.1
12/14/1988	7	5.76		10.16			22.2
12/14/1988	9	5.77		10.66			22.3
12/14/1988	11	6.05		10.54			22.6
1/18/1989	1	5.1	7.92	10.77			23.1
1/18/1989	3	5.15		10.73			23.3
1/18/1989	5	5.22		10.6			23.4
1/18/1989	7	5.24		10.42			23.5
1/18/1989	9	5.31		10.26			24.1
1/18/1989	11	5.27	7.87				24.3
2/7/1989	1				10.44		
2/7/1989	26.99				10.9		
4/12/1989	1	10.88	7.81	9.63			16.3
4/12/1989	3	10.89		9.57			16.3
4/12/1989	5	11		9.28			16.7
4/12/1989	7	10.67		9.02			17.7
4/12/1989	9	10.53	7.7	8.86			18.1
2/12/1990	1	7.4	8.08	7.9	12.6		13.7
2/12/1990	3	7.41		7.89			13.9
2/12/1990	5	7.39		7.85			14
2/12/1990	7	7.38		7.73			14.2
2/12/1990	9	7.25		7.66			14.7
2/12/1990	10	7.15	7.94	7.86	12.38		14.8
3/12/1990	1	9.36	8.4	13.66			12.9
3/12/1990	3	9.09		13.47			13.2
3/12/1990	5	7.85		11.53			13.8
3/12/1990	7	7.84		11.47			13.7
3/12/1990	9	7.7	7.63	11.35			13.9
3/27/1990	1	10.29	8.76	12.15	13.12		12.8
3/27/1990	3	10.32		12.03			12.9
3/27/1990	5	10.39		12.08			12.9
3/27/1990	7	10.44		11.99			13
3/27/1990	8	10.51	8.69	11.44	9.18		13.5
4/9/1990	1	10.09	8.53	11.9			11.4
4/9/1990	3	10.56		12.09			12.3
4/9/1990	5	10.66		12.1			12.7
4/9/1990	7	10.62		11.78			13.2

VA0063029 - Mizpah Nursing Home, Inc. WWTP
Ambient Stream Data from Monitoring Station 3-RPP010.60 (Rappahannock River)
2013 Permit Reissuance

Collection Date	Depth (m)	Temp (˚C)	pH (SU)	DO Probe (mg/L)	DO Winkler (mg/L)	Fdt DO Optical (mg/L)	Salinity (g/kg)
4/9/1990	9	10.44		11.12			14.2
4/9/1990	11	10.29		10.63			14.6
4/9/1990	13	10.22	8.47	10.71			14.8
4/24/1990	1	15	8.58	11.45	12.43		11
4/24/1990	3	14.25		12.12			12
4/24/1990	5	13.78		11.18			12.9
4/24/1990	7	13.31		10.54			13.5
4/24/1990	9	13.21		10.02			13.7
4/24/1990	10	12.79	8.53	9.61	9.75		14.3
5/8/1990	1	17.81	8.06	7.93	8		12
5/8/1990	3	17.82		7.87			12.1
5/8/1990	5	17.86		7.77			12.2
5/8/1990	7	17.78		6.99			12.7
5/8/1990	8	17.16	8.24	5.72	6.36		14.2
5/24/1990	1	18.96	7.62	6.35			13
5/24/1990	3	19.11		6.15			13.3
5/24/1990	5	19.2		5.87			13.6
5/24/1990	7	19.2		5.44			13.9
5/24/1990	9	19.2		4.51			15
5/24/1990	10	19.17		4.06			15
6/11/1990	1	23.21	7.03	7.05	7.55		11.7
6/11/1990	3	23.08		6.83			12.2
6/11/1990	5	23.01		6.63			12.4
6/11/1990	7	22.55		5.42			12.8
6/11/1990	9	21.4	7.38	3.72	4.16		14.4
6/25/1990	1	24.79	7.98	7.07	7.3		12.8
6/25/1990	3	24.82		6.97			12.8
6/25/1990	5	24.76		7.07			13.2
6/25/1990	7	24.76		5.75			13.2
6/25/1990	9	24.15		5.01			14.8
6/25/1990	10	23.97	7.92	4.64	4.49		15.2
7/9/1990	1	26.62	8.59	6.63			13.9
7/9/1990	3	26.62		6.56			13.8
7/9/1990	5	26.6		5.87			14
7/9/1990	7	26.39		4			14.1
7/9/1990	9	26.23		2.92			14.4
7/9/1990	11	25.75		0.69			15.1
7/9/1990	12	25.35	7.09	0.35	1.43		15.7
7/23/1990	1	28.29	8.19	7.62	9.06		14.3
7/23/1990	3	28.3		7.54			14.4
7/23/1990	5	28.31		6.78			14.6
7/23/1990	7	27.68		3.7			15.5
7/23/1990	9	27.52		3.28			15.7
7/23/1990	10	27.5	7.56	3.31	4.82		15.7
8/6/1990	1	27.29	8.39	7.22			14.1
8/6/1990	3	27.25		7.3			14.1
8/6/1990	5	25.25		7.23			14.1
8/6/1990	7	27.3		3.47			15
8/6/1990	9	27.07		0.38			16.9

VA0063029 - Mizpah Nursing Home, Inc. WWTP
Ambient Stream Data from Monitoring Station 3-RPP010.60 (Rappahannock River)
2013 Permit Reissuance

Collection Date	Depth (m)	Temp (˚C)	pH (SU)	DO Probe (mg/L)	DO Winkler (mg/L)	Fdt DO Optical (mg/L)	Salinity (g/kg)
8/6/1990	10	26.89	7.29	0.35			18
8/21/1990	1	27.23	7.89	5.06	4.79		15
8/21/1990	3	27.26		5.05			15.1
8/21/1990	5	27.26		4.97			15.1
8/21/1990	7	27.27		4.71			15.1
8/21/1990	9	27.26		4.5			15.2
8/21/1990	11	27.24	8.15	4.46	4.48		15.2
9/5/1990	1	26.47	7.75	5.87			14.7
9/5/1990	3	26.45		5.86			14.7
9/5/1990	5	26.52		5.91			14.7
9/5/1990	7	26.41		5.93			14.7
9/5/1990	9	26.37		5.74			14.7
9/5/1990	11	26.38		5.11			14.9
9/5/1990	12	26.3	7.52	4.37			15.1
9/20/1990	1	22.89	7.79	6.3			13.6
9/20/1990	3	22.89		6.35			13.6
9/20/1990	5	22.91		6.34			13.6
9/20/1990	7	22.92		6.37			13.6
9/20/1990	9	22.98		6.31			13.7
9/20/1990	10	22.99	7.83	6.32			13.8
10/4/1990	1	21.09	8.01	7.49			16.4
10/4/1990	3	21.1		7.45			16.3
10/4/1990	5	21.25		6.85			16.7
10/4/1990	7	21.25		6.64			16.8
10/4/1990	9	21.4		4.96			16.9
10/4/1990	10	21.38	7.7	5.15			17.5
10/22/1990	1	19.57	7.75	7.05	7.76		16.2
10/22/1990	3	19.83		7.01			16.4
10/22/1990	5	20.27		6.92			16.9
10/22/1990	7	20.21		6.94			16.9
10/22/1990	9	20.3		6.64			17.2
10/22/1990	10	20.3	7.73	6.57	6.75		17.4
11/6/1990	1	16.09	7.97	8.35	8.63		15.8
11/6/1990	3	16.09		8.4			15.8
11/6/1990	5	16.09		8.43			15.8
11/6/1990	7	16.08		8.53			15.9
11/6/1990	9	16.1		8.52			16.1
11/6/1990	11	15.96	7.96	8.54	8.34		16.2
12/11/1990	1	8.45	8.02	10.99	10.83		14.8
12/11/1990	3	8.43		10.95			14.8
12/11/1990	5	8.37		10.94			14.8
12/11/1990	7	8.51		10.83			15
12/11/1990	9	9.07	7.93	10.28	10		16.1
1/2/1991	1	8.21	8.09	11.99	10.49		13.9
1/2/1991	3	8.27		12.28			14
1/2/1991	5	8.29		12.12			14.1
1/2/1991	7	8.29		12.26			14.1
1/2/1991	9	8.31		12.44			14.2
1/2/1991	11	8.31		12.28			14.3

VA0063029 - Mizpah Nursing Home, Inc. WWTP
Ambient Stream Data from Monitoring Station 3-RPP010.60 (Rappahannock River)
2013 Permit Reissuance

Collection Date	Depth (m)	Temp (˚C)	pH (SU)	DO Probe (mg/L)	DO Winkler (mg/L)	Fdt DO Optical (mg/L)	Salinity (g/kg)
1/2/1991	13	8.3		12.28			14.4
1/2/1991	14	8.29	6.71	12.51	10.5		14.5
2/21/1991	1	6	8.26	12.61	11.9		12.4
2/21/1991	3	6.41		12.33			12.9
2/21/1991	5	6.09		12.12			13.1
2/21/1991	7	5.53		11.85			13.5
2/21/1991	9	5.36	8.1	11.9	10.92		13.6
3/12/1991	1	7.44	8.5	11.31			12.5
3/12/1991	3	7.43		11.32			12.5
3/12/1991	5	7.43		11.37			12.5
3/12/1991	7	7.69		11.58			12.7
3/12/1991	9	7.75		11.41			13.2
3/12/1991	10	7.73	8.4	11.6			13.2
3/21/1991	1	8.73	8.45	11.85	13.36		12.5
3/21/1991	3	8.65		11.7			12.5
3/21/1991	5	8.43		11.59			12.7
3/21/1991	7	8.4		11.64			12.9
3/21/1991	9	8.12		11.43			13.1
3/21/1991	10	8.12	8.16	11.58	10.67		13.1
4/1/1991	1	11.13	8.8	11.87	9.98		11.6
4/1/1991	3	11.12		11.84			11.6
4/1/1991	5	11.22		11.75			11.8
4/1/1991	7	11.26		11.41			12.1
4/1/1991	9	10.91		11.47			12.5
4/1/1991	11	10.83	8.64	11.63	10.98		12.6
4/22/1991	1	13.34	7.74	8.24	8.43		12.1
4/22/1991	3	13.34		8.24			12.1
4/22/1991	5	13.39		8.21			12.2
4/22/1991	7	13.47		8.14			12.5
4/22/1991	9	13.46		8.17			12.9
4/22/1991	11	13.43		8.26			13.1
4/22/1991	12	13.4	7.86	8.32	9.23		13.5
4/30/1991	1	17.11	8.03	8.3	8.55		12.5
4/30/1991	3	16.97		8.35			12.7
4/30/1991	5	16.96		8.38			12.8
4/30/1991	7	15.91		7.63			13
4/30/1991	9	15.65	7.82	7.57	7.79		13.2
5/14/1991	1	20.94	7.89	7.66	6.29		11.8
5/14/1991	3	20.7		7.36			12.1
5/14/1991	5	20.48		7.16			12.3
5/14/1991	7	20.35		7.12			12.5
5/14/1991	9	19.75	7.67	6.93	6.46		13
6/11/1991	1	24.37	8.14	8.09			13.5
6/11/1991	3	24.36		8.01			13.4
6/11/1991	5	24.36		7.95			13.5
6/11/1991	7	24.34		7.61			13.5
6/11/1991	9	23.33		2.54			15.3
6/11/1991	11	22.84		1.52			16.3
6/11/1991	13	22.72		0.65			17.4

VA0063029 - Mizpah Nursing Home, Inc. WWTP
Ambient Stream Data from Monitoring Station 3-RPP010.60 (Rappahannock River)
2013 Permit Reissuance

Collection Date	Depth (m)	Temp (˚C)	pH (SU)	DO Probe (mg/L)	DO Winkler (mg/L)	Fdt DO Optical (mg/L)	Salinity (g/kg)
6/11/1991	15	22.74		1.81			17.5
6/11/1991	17	22.8		2.3			18.1
6/11/1991	19	22.78	7.41	2.74			18.8
6/25/1991	1	24.72		7.38	7.73		15.2
6/25/1991	3	24.84		6.75			15.3
6/25/1991	5	24.88		6.18			15.5
6/25/1991	7	24.89		5.87			15.5
6/25/1991	9	24.87		4.37			15.8
6/25/1991	11	24.87	7.31	2.53	2.65		16.5
7/11/1991	1	27.75	7.74	6.99	7.19		15.2
7/11/1991	3	27.81		6.98			15.3
7/11/1991	5	27.89		6.23			15.7
7/11/1991	7	27.55		4.37			16
7/11/1991	9	26.71		2.11			17.2
7/11/1991	10	26.58	6.98	1.94	2.03		17.3
7/25/1991	1	29.29	8.03	6.94	7.39		17.9
7/25/1991	3	29.25		6.85			18
7/25/1991	5	28.27		6.51			18.3
7/25/1991	7	28.21		1.68			20.7
7/25/1991	9	27.55		0.49			21.8
7/25/1991	11	27.31		0.41			22.4
7/25/1991	13	27.28		0.46			22.6
7/25/1991	15	27.28	7.24	0.58	0.3		22.6
8/8/1991	1	27.26	7.71	5.7	6.25		17.1
8/8/1991	3	27.31		5.62			17.1
8/8/1991	5	27.37		5.17			17.3
8/8/1991	7	27.4		3.97			17.7
8/8/1991	9	27.39		3.78			17.7
8/8/1991	10	27.32	7.45	3.16	3.47		17.9
8/22/1991	1	26.66		5.97	6.21		17.5
8/22/1991	3	26.64		5.91			17.5
8/22/1991	5	26.64		5.75			17.5
8/22/1991	7	26.7		4.09			18.1
8/22/1991	9	26.7	7.46	3.17	4.42		19.1
9/10/1991	1	25.36	7.68	6.18	5.99		19.2
9/10/1991	3	25.41		6.11			19.3
9/10/1991	5	25.52		5.5			19.6
9/10/1991	7	25.5		5.16			19.7
9/10/1991	9	25.48		5.26			19.9
9/10/1991	11	25.41	7.6	5.12	5.13		20.3
9/24/1991	1	23.11	7.64	6.49			19.2
9/24/1991	3	23.12		6.5			19.2
9/24/1991	5	23.4		6.02			19.4
9/24/1991	7	23.51		5.35			19.7
9/24/1991	9	23.52	7.52	5.26			20.1
10/8/1991	1	20.53	7.77	7.59	7.81		19.5
10/8/1991	3	20.53		7.6			19.5
10/8/1991	5	20.48		7.63			19.5
10/8/1991	7	20.49		7.68			19.5

VA0063029 - Mizpah Nursing Home, Inc. WWTP
Ambient Stream Data from Monitoring Station 3-RPP010.60 (Rappahannock River)
2013 Permit Reissuance

Collection Date	Depth (m)	Temp (˚C)	pH (SU)	DO Probe (mg/L)	DO Winkler (mg/L)	Fdt DO Optical (mg/L)	Salinity (g/kg)
10/8/1991	9	20.46		7.77			19.5
10/8/1991	10	20.45	7.71	7.88	7.79		19.5
10/23/1991	1	16.53	7.8	9.06	9		19.4
10/23/1991	3	16.68		8.97			19.5
10/23/1991	5	16.75		8.27			19.8
10/23/1991	7	16.81		7.8			20
10/23/1991	9	16.82		7.84			20.1
10/23/1991	10	16.84	7.72	7.88	7.54		20.2
11/7/1991	1	13.43	7.67	7.8	8.09		19.2
11/7/1991	3	13.41		7.82			19.3
11/7/1991	5	13.39		7.93			19.2
11/7/1991	7	13.4		7.87			19.3
11/7/1991	9	13.38		7.87			19.3
11/7/1991	11	13.34	7.71	8.42	8.08		19.3
12/9/1991	1	9.9	7.94	8.39	9.7		20
12/9/1991	3	9.9		8.35			20
12/9/1991	5	9.9		8.39			20
12/9/1991	7	9.84		8.34			20.6
12/9/1991	9	9.9		8.44			20.3
12/9/1991	10	9.86	7.92	8.35	8.7		20.3
1/7/1992	1	6.63	7.99	10.41	9.75		18.9
1/7/1992	3	6.63		10.44			18.8
1/7/1992	5	6.63		10.4			18.9
1/7/1992	7	6.62		10.46			19
1/7/1992	9	6.73		10.45			19.4
1/7/1992	11	6.73	7.99	10.49	10.82		19.4
2/4/1992	1	3.77	8.06	11.23	10.6		19
2/4/1992	3	3.91		11.16			19.2
2/4/1992	5	3.99		11.12			19.5
2/4/1992	7	3.96		11.18			19.7
2/4/1992	8	3.96	8.03	11.29	11.5		19.7
3/5/1992	1	8.26	8.14	10.9	10.71		17.8
3/5/1992	3	8.25		10.91			18.4
3/5/1992	5	8.07		10.84			18.6
3/5/1992	7	7.95		10.63			18.6
3/5/1992	9	6.87		10.26			20.2
3/5/1992	11	6.75		10.27			20.6
3/5/1992	13	6.72		10.29			20.8
3/5/1992	15	6.7		10.34			20.8
3/5/1992	17	6.72		10.43			20.9
3/5/1992	18	6.74	7.97	10.68	11.31		20.8
4/16/1992	1	12.15	8.18	10.26			17
4/16/1992	3	12.15		10.26			17
4/16/1992	5	12.15		10.3			17
4/16/1992	7	12.15		10.29			17.1
4/16/1992	9	12.14		10.38			17.1
4/16/1992	10	12.09	8.15	10.57			17.1
5/11/1992	0.3	15.6	8.14	9.2			
5/11/1992	1	15.62	8.14	9.22	9.41		15.2

VA0063029 - Mizpah Nursing Home, Inc. WWTP
Ambient Stream Data from Monitoring Station 3-RPP010.60 (Rappahannock River)
2013 Permit Reissuance

Collection Date	Depth (m)	Temp (˚C)	pH (SU)	DO Probe (mg/L)	DO Winkler (mg/L)	Fdt DO Optical (mg/L)	Salinity (g/kg)
5/11/1992	3	15.65		9.17			15.2
5/11/1992	5	15.6		9.06			15.4
5/11/1992	7	15.52		8.98			15.5
5/11/1992	9	15.41		10.1			15.5
5/11/1992	11	15.02		10.23	8.43		16.4
5/18/1992	1	18.36	8.02	8.13	7.88		15.7
5/18/1992	3	18.33		8.07			15.8
5/18/1992	5	18.14		7.88			16
5/18/1992	7	18.02		7.84			16.1
5/18/1992	9	17.88		7.81			16.2
5/18/1992	10	17.77	7.94	7.82	7.35		16.2
6/2/1992	1	19.55	8.08	12.15			14.7
6/2/1992	3	19.49		9.77			14.7
6/2/1992	5	19.48		9.71			14.8
6/2/1992	7	19.5		10.35			15
6/2/1992	9	18.87		8.41			17.2
6/2/1992	10	18.73	7.99	9.24			18.1
6/16/1992	1	23.91	8.15	8.23	8.54		13.7
6/16/1992	3	23.75		8.07			13.8
6/16/1992	5	22.64		6.36			14.4
6/16/1992	7	21.62		3.53			15.3
6/16/1992	9	21.29		3.54			16.2
6/16/1992	11	21.22	7.75	3.74	4.23		16.6
6/30/1992	1	23.84		7.76	8.54		16
6/30/1992	3	23.84		7.71			16
6/30/1992	5	23.86		7.69			16.1
6/30/1992	7	23.1		5.3			16.9
6/30/1992	9	22.04		3.18			17.8
6/30/1992	11	21.53	7.4	2.27	2.15		18.6
8/27/1992	1	26.29	8.08	7.56	8.02		16.3
8/27/1992	3	26.35		7.34			14.9
8/27/1992	5	26.29		7.19			16.5
8/27/1992	7	26.02		5.7			16.8
8/27/1992	9	25.85		5.52			17.1
8/27/1992	11	25.83		5.59			17
8/27/1992	13	25.75		5.64			17.2
8/27/1992	15	25.72		5.57			17.4
8/27/1992	17	25.64	7.83	5.38	5.02		17.3
9/28/1992	1	22.16	7.77	5.93	7.72		16.2
9/28/1992	3	22.11		5.33			16.9
9/28/1992	5	21.99		4.99			16.9
9/28/1992	7	21.97		4.84			17.1
9/28/1992	9	21.95		4.82			17.2
9/28/1992	11	21.95	7.58	4.9	5.73		17.1
10/13/1992	1	18.16	7.82	7.73	5.92		16.4
10/13/1992	3	18.16		7.68			15.4
10/13/1992	5	18.25		7.56			16.5
10/13/1992	7	18.52		7.74			17
10/13/1992	9	18.65		7.04			18.1

VA0063029 - Mizpah Nursing Home, Inc. WWTP
Ambient Stream Data from Monitoring Station 3-RPP010.60 (Rappahannock River)
2013 Permit Reissuance

Collection Date	Depth (m)	Temp (˚C)	pH (SU)	DO Probe (mg/L)	DO Winkler (mg/L)	Fdt DO Optical (mg/L)	Salinity (g/kg)
10/13/1992	11	18.68	7.73	6.74	6.3		18.7
10/27/1992	1	14.84	7.88	8.56	8.41		18.3
10/27/1992	3	14.86		8.41			18.4
10/27/1992	5	14.92		8.35			18.3
10/27/1992	7	15.04		8.26			18.5
10/27/1992	9	15.08	7.27	8.24	8.39		18.6
11/12/1992	1	12.83	7.83	9.66			16.1
11/12/1992	3	12.94		9.46			16.5
11/12/1992	5	13.02		9.04			16.8
11/12/1992	7	13.26		8.65			17.1
11/12/1992	9	13.31		8.33			17.6
11/12/1992	11	13.23		8.3			17.5
11/12/1992	13	13		8.46			17.8
11/12/1992	15	12.86		8.55			17.8
11/12/1992	17	12.83		8.57			18
11/12/1992	19	12.83		8.54			18
11/12/1992	19.99	12.83	7.77	8.66			17.9
12/16/1992	1	5.58	7.82	11.63	12.43		14.2
12/16/1992	3	6.35		11.33			15.6
12/16/1992	5	6.6		11.13			16.8
12/16/1992	7	6.66		10.51			17.2
12/16/1992	9	6.62		10.53			17.5
12/16/1992	11	6.6	7.78	10.78	10.65		17.4
2/8/1993	1	3.92	8.34	12.08	14		13.7
2/8/1993	3	3.94		12.12			13.7
2/8/1993	5	3.91		12.08			13.8
2/8/1993	7	3.96		11.99			14
2/8/1993	9	4.17		11.43			14.9
2/8/1993	11	4.18	8.19	11.46	12.41		15
3/29/1993	1	9	8.6	13.16	13.35		7.6
3/29/1993	3	8.52		12.77			8.4
3/29/1993	5	7.28		11.73			11.8
3/29/1993	7	5.77		10.66			14
3/29/1993	9	5.74	7.88	10.92	10.77		14.1
4/12/1993	1	10.46	8.41	11.64			9.4
4/12/1993	3	10.38		11.3			9.3
4/12/1993	5	10.96		10.38			9.8
4/12/1993	7	11.23		10.4			10.1
4/12/1993	9	10		11.08			10.6
4/12/1993	10	9.81	8.25	10.91			11
4/20/1993	1	13.94	8.78	11.08	10.71		8.2
4/20/1993	3	13.94		11.08			8.2
4/20/1993	5	13.92		11.05			8.3
4/20/1993	7	12.16		10.33			10.6
4/20/1993	9	11.65		9.85			11.3
4/20/1993	11	10.42		8.33			12.9
4/20/1993	13	10.34	8.07	8.21	8.23		13
5/5/1993	0.3	17	8.65		10.6		
5/5/1993	1	17.05	8.65	10.68	10.7		9

VA0063029 - Mizpah Nursing Home, Inc. WWTP
Ambient Stream Data from Monitoring Station 3-RPP010.60 (Rappahannock River)
2013 Permit Reissuance

Collection Date	Depth (m)	Temp (˚C)	pH (SU)	DO Probe (mg/L)	DO Winkler (mg/L)	Fdt DO Optical (mg/L)	Salinity (g/kg)
5/5/1993	3	16.89		10.67			9.1
5/5/1993	5	16.88		10.66			9.1
5/5/1993	7	16.12		9.76			9.6
5/5/1993	9	14.94		8.08			9.9
5/5/1993	11	14.46		7.24			10.2
5/5/1993	13	13.88		6.18			10.3
5/5/1993	15	13.79		6.02			10.6
5/5/1993	17	13.69		6.02			10.3
5/5/1993	19	13.66		5.88			10.5
5/5/1993	19.99	13.66	7.73	5.91	5.97		10.4
5/20/1993	1	20.15	7.9	6.54			8
5/20/1993	3	20.14		6.49			8
5/20/1993	5	20.09		6.69			8.1
5/20/1993	7	19.98		5.74			8.3
5/20/1993	9	19.4		4.08			9.2
5/20/1993	11	17.3		1.34			11.6
5/20/1993	13	16.54		0.86			12.3
5/20/1993	15	16.29		0.87			13.2
5/20/1993	17	16.27		1.16			13.9
5/20/1993	19	16.2	7.43	1.14			13.8
6/3/1993	1	21	7.9	7.64			9.6
6/3/1993	3	20.99		7.22			9.8
6/3/1993	5	21.04		7.23			10
6/3/1993	7	20.74		6.02			10.3
6/3/1993	9	19.74		2.92			12.1
6/3/1993	10	19.14	7.42	2.42	1.93		13.6
6/21/1993	1	26.02	8.13	7.55			10.2
6/21/1993	3	25.95		7.35			10.2
6/21/1993	5	25.57		6.24			10.7
6/21/1993	7	23.94		3.72			12.5
6/21/1993	9	23.15		2.26			14
6/21/1993	11	22.96	7.44	1.9			15
7/6/1993	1	28.03	8.23	10.01	8.49		12.6
7/6/1993	3	28.02		9.95			12.6
7/6/1993	5	26.8		3.97			13.7
7/6/1993	7	25.98		1.73			14.1
7/6/1993	9	25.89		1.45			14.4
7/6/1993	11	25.69	7.48	1.04	1.42		15
7/20/1993	1	28.09	8.02	5.76	5.51		13.4
7/20/1993	3	28.09		5.74			13.4
7/20/1993	5	28.08		5.75			13.4
7/20/1993	7	28.06		5.03			13.5
7/20/1993	9	27.64		2.21			14.5
7/20/1993	11	26.62	7.39	0.21	0.74		15.8
8/3/1993	1	27.37	7.99	6.02			15.3
8/3/1993	3	27.37		5.97			15.3
8/3/1993	5	27.42		5.69			15.4
8/3/1993	7	27.3		3.77			16.1
8/3/1993	9	26.92		1.76			17.7

VA0063029 - Mizpah Nursing Home, Inc. WWTP
Ambient Stream Data from Monitoring Station 3-RPP010.60 (Rappahannock River)
2013 Permit Reissuance

Collection Date	Depth (m)	Temp (˚C)	pH (SU)	DO Probe (mg/L)	DO Winkler (mg/L)	Fdt DO Optical (mg/L)	Salinity (g/kg)
8/3/1993	10	26.83	7.65	1.3			17.7
8/17/1993	1	27.33	8.19	6.75			15.5
8/17/1993	3	27.32		6.72			15.5
8/17/1993	5	27.31		6.5			15.5
8/17/1993	7	26.7		3.15			16.6
9/8/1993	1	27.11		6.77	6.68		17.8
9/8/1993	3	27.09		6.87			17.8
9/8/1993	5	27.11		6.86			17.9
9/8/1993	7	27.2		4			18.8
9/8/1993	9	27.09		3.09			19.4
9/8/1993	10	27.01		3.05	2.88		19.7
9/16/1993	1	25.34	7.88	5.76			18.4
9/16/1993	3	25.34		5.75			18.4
9/16/1993	5	25.35		5.61			18.4
9/16/1993	7	25.36		5.48			18.4
9/16/1993	9	25.39	7.85	5.66			18.5
10/4/1993	1	20.34	7.87	6.88	7.22		18.4
10/4/1993	3	20.36		6.9			18.4
10/4/1993	5	20.37		6.85			18.5
10/4/1993	7	20.37		6.83			18.5
10/4/1993	9	20.44		6.79			18.5
10/4/1993	11	20.65		6.67			19
10/4/1993	13	20.6		6.69			18.9
10/4/1993	15	20.58		6.75			19
10/4/1993	16	20.56	7.67	6.8	7.49		19
1/11/1994	1	2.87	8.25	14.87			14.9
1/11/1994	3	3.28		14.67			15.3
1/11/1994	5	3.19		14.62			15.4
1/11/1994	7	3.16		14.66			15.5
1/11/1994	9	3.25		14.72			15.5
1/11/1994	10	3.24	8.08	14.93			15.6
2/8/1994	1	2.45		13.42	13.57		12
2/8/1994	3	1.97		13.34			13.8
2/8/1994	5	1.78		12.99			15.2
2/8/1994	7	1.59		12.91			16.1
2/8/1994	8	1.61		13.01	13.01		16.1
3/15/1994	1	7.19	8.17	13.18	13.29		9
3/15/1994	3	6.97		12.75			9.8
3/15/1994	5	6.73		12.58			11.1
3/15/1994	7	5.6		11.54			13.4
3/15/1994	9	5.47		11.5			13.8
3/15/1994	11	5.32	7.81	11.62	11.19		14.4
4/12/1994	1	12.93	7.99	10.19	10.58		8.5
4/12/1994	3	12.94		10.19			8.5
4/12/1994	5	12.98		10.02			8.6
4/12/1994	7	12.67		9.46			9.1
4/12/1994	9	12.31		9.58			9.5
4/12/1994	10	12.08	7.89	9.67	9.36		9.9
5/10/1994	1	17.23	8.39	9.67	10.26		8.1

VA0063029 - Mizpah Nursing Home, Inc. WWTP
Ambient Stream Data from Monitoring Station 3-RPP010.60 (Rappahannock River)
2013 Permit Reissuance

Collection Date	Depth (m)	Temp (˚C)	pH (SU)	DO Probe (mg/L)	DO Winkler (mg/L)	Fdt DO Optical (mg/L)	Salinity (g/kg)
5/10/1994	3	17.29		9.57			8.2
5/10/1994	5	17.22		8.98			8.3
5/10/1994	7	17.05		8.32			8.9
5/10/1994	9	16.67		7.63			9.3
5/10/1994	11	17.33		7.26			10
5/10/1994	12	16.28	7.75	7.09	7.33		10.4
6/7/1994	1	22.04	7.94	9.24	7.23		9.9
6/7/1994	3	21.98		9.13			9.9
6/7/1994	5	21.91		8.99			9.9
6/7/1994	7	21.17		4.74			10.7
6/7/1994	9	19.45		4.28			11.8
6/7/1994	11	19.02		3.93			12.4
6/7/1994	13	18.92	7.9	3.79	2.94		12.4
7/5/1994	1	27.1	8.16	7.06	7.17		13.1
7/5/1994	3	26.94		6.8			13.2
7/5/1994	5	26.53		4.23			13.8
7/5/1994	7	25.73		1.57			14.3
7/5/1994	9	24.64		0.25			15.8
7/5/1994	11	24.51	7.1	0.32	0.7		16
8/9/1994	1	25.38	8.05	7.07			12.6
8/9/1994	3	25.38		7.06			12.6
8/9/1994	5	26.19		6.99			13.2
8/9/1994	7	26.33		4.52			13.8
8/9/1994	9	26.36		3.17			14.3
8/9/1994	11	26.29	7.59	2.52			14.5
9/6/1994	5	23.63		6.51			13.7
9/6/1994	7	23.88		6.12			13.9
9/6/1994	9	24.19		5.45			14.3
10/5/1994	12	20.9	7.8	6.09			16.2
10/5/1994	1	19.88	7.86	6.94			15.4
10/5/1994	3	20.01		6.87			15.4
10/5/1994	5	20.07		6.84			15.4
10/5/1994	7	20.27		6.61			15.5
10/5/1994	9	20.66		6.27			16
10/5/1994	11	20.03		6.12			16.2
11/15/1994	13	14.07	7.78	8.13			18.5
11/15/1994	1	13.8	7.86	8.9			16.8
11/15/1994	3	14.07		8.73			17
11/15/1994	5	14.33		8.16			17.7
11/15/1994	7	14.15		7.98			18.3
11/15/1994	9	14.09		8			18.5
11/15/1994	11	14.08		8.04			18.5
12/1/1994	11	11.86	7.77	8.57			20.2
12/1/1994	1	11.04	7.91	9.72			17.2
12/1/1994	3	11.19		9.63			17.3
12/1/1994	5	11.55		9.28			18
12/1/1994	7	11.66		8.84			19.2
12/1/1994	9	11.84		8.61			19.9
1/10/1995	20.99	6.25	7.74	10.31			19.8

VA0063029 - Mizpah Nursing Home, Inc. WWTP
Ambient Stream Data from Monitoring Station 3-RPP010.60 (Rappahannock River)
2013 Permit Reissuance

Collection Date	Depth (m)	Temp (˚C)	pH (SU)	DO Probe (mg/L)	DO Winkler (mg/L)	Fdt DO Optical (mg/L)	Salinity (g/kg)
1/10/1995	1	5.42	7.83	11.45			17.3
1/10/1995	3	5.42		11.32			17.5
1/10/1995	5	5.9		10.96			18.1
1/10/1995	7	6.06		10.77			18.6
1/10/1995	9	6.05		10.74			18.8
1/10/1995	11	6.07		10.67			18.9
1/10/1995	13	6.12		10.59			19.1
1/10/1995	15	6.18		10.49			19.4
1/10/1995	17	6.2		10.4			19.6
1/10/1995	19	6.23		10.37			19.7
2/14/1995	16	2.73	7.81	13			18.5
2/14/1995	1	1.79	7.96	13.31			15
2/14/1995	3	1.95		13.26			15.2
2/14/1995	5	2.42		13.02			16
2/14/1995	7	2.46		12.71			16.8
2/14/1995	9	2.6		12.24			17.8
2/14/1995	11	2.64		12.11			18.1
2/14/1995	13	2.71		12			18.4
2/14/1995	15	2.7		12.32			18.4
3/14/1995	10	5.3	7.76	11.1			18.6
3/14/1995	1	7.87	8.28	13.62			15
3/14/1995	3	7.07		13.26			15.6
3/14/1995	5	6.26		11.72			16.4
3/14/1995	7	5.8		11.33			17.5
3/14/1995	9	5.36		11.01			18.2
4/6/1995	11	10.5	8.16	9.39			18.8
4/6/1995	1	10.87	8.28	9.19			15.6
4/6/1995	3	10.85		9.23			15.6
4/6/1995	5	10.93		9.27			15.7
4/6/1995	7	11.09		9.28			16.2
4/6/1995	9	10.63		9.26			17.3
5/16/1995	11	18.24	7.48	7.06			15.9
5/16/1995	1	18.5	7.58	7.44			15.4
5/16/1995	3	18.51		7.46			15.4
5/16/1995	5	18.52		7.5			15.4
5/16/1995	7	18.48		7.19			15.8
5/16/1995	9	18.28		7.08			15.9
6/8/1995	12	22.32	7.47	5.4			17.4
6/8/1995	1	23.91	7.74	7.57			15.5
6/8/1995	3	23.85		7.34			15.8
6/8/1995	5	23.55		6.95			16.3
6/8/1995	7	23.28		6.63			16.5
6/8/1995	9	22.5		5.45			17.2
6/8/1995	11	22.36		5.36			17.3
7/11/1995	10	25.85	7.28	1.51			17.1
7/11/1995	1	26.78	8.32	8.74			11.4
7/11/1995	3	26.7		6.64			15.1
7/11/1995	5	26.42		2.55			15.7
7/11/1995	7	26.02		1.5			16.3

VA0063029 - Mizpah Nursing Home, Inc. WWTP
Ambient Stream Data from Monitoring Station 3-RPP010.60 (Rappahannock River)
2013 Permit Reissuance

Collection Date	Depth (m)	Temp (˚C)	pH (SU)	DO Probe (mg/L)	DO Winkler (mg/L)	Fdt DO Optical (mg/L)	Salinity (g/kg)
7/11/1995	9	25.86		1.35			17.1
8/10/1995	19	27.54	7.44	4.19			17.7
8/10/1995	1	27.01	7.56	5.61			16.7
8/10/1995	3	27.04		5.52			16.7
8/10/1995	5	27.05		5.47			16.6
8/10/1995	7	27.1		5.4			16.6
8/10/1995	9	27.52		4.3			16.9
8/10/1995	11	27.85		3.75			17.1
8/10/1995	13	27.62		4.15			17.3
8/10/1995	15	27.57		4.04			17.6
8/10/1995	17	27.55		4.06			17.7
9/7/1995	11	25.77	7.73	2.97			19.6
9/7/1995	1	25.55	8	6.68			17.7
9/7/1995	3	25.66		6.34			17.8
9/7/1995	5	25.86		5.03			18.5
9/7/1995	7	25.83		3.54			19.2
9/7/1995	9	25.8		3.23			19.4
10/13/1995	11	21.94	7.68	4.31			22.7
10/13/1995	1	21.23	8.01	7.99			20.2
10/13/1995	3	21.27		7.96			20.2
10/13/1995	5	21.44		7.83			20.3
10/13/1995	7	21.91		6.11			21.2
10/13/1995	9	22.01		4.47			22.4
11/27/1995	11	8.85	7.94	10.07			19.7
11/27/1995	1	8.51	8.03	10.99			18.2
11/27/1995	3	8.53		10.98			18.2
11/27/1995	5	8.59		10.87			18.3
11/27/1995	7	8.82		10.74			19
11/27/1995	9	8.86		10.25			19.3
12/13/1995	10	6.08	8.16	10.42			18.3
12/13/1995	1	5.32	8.22	10.86			17.8
12/13/1995	3	5.33		10.83			17.8
12/13/1995	5	6.16		10.39			18.2
12/13/1995	7	6.14		10.41			18.2
12/13/1995	9	6.12		10.43			18.3
1/25/1996	19.99	1.81	7.98	12.71			16.9
1/25/1996	1	2.75	8.04	12.42			13
1/25/1996	3	2.83		12.37			14
1/25/1996	5	2.81		12.42			14.4
1/25/1996	7	2.86		12.39			14.6
1/25/1996	9	2.41		12.35			15.8
1/25/1996	11	1.9		12.42			16.8
1/25/1996	13	1.9		12.45			16.7
1/25/1996	15	1.86		12.51			16.8
1/25/1996	17	1.84		12.55			16.9
1/25/1996	19	1.85		12.67			16.9
2/6/1996	11	4	7.55	11.1			12.3
2/6/1996	1	4.66	7.62	11.95			9
2/6/1996	3	4.66		11.98			9.1

VA0063029 - Mizpah Nursing Home, Inc. WWTP
Ambient Stream Data from Monitoring Station 3-RPP010.60 (Rappahannock River)
2013 Permit Reissuance

Collection Date	Depth (m)	Temp (˚C)	pH (SU)	DO Probe (mg/L)	DO Winkler (mg/L)	Fdt DO Optical (mg/L)	Salinity (g/kg)
2/6/1996	5	4.59		12.04			9.4
2/6/1996	7	4.44		11.94			10.1
2/6/1996	9	4.19		11.68			11
2/22/1996	13	2.07	7.98	13.5			13.2
2/22/1996	1	2.78	8.08	14.15			12.3
2/22/1996	3	2.5		13.76			12.5
2/22/1996	5	2.37		13.58			12.8
2/22/1996	7	2.39		13.52			12.8
2/22/1996	9	2.2		13.47			13
2/22/1996	11	2.11		13.45			13.1
3/14/1996	12	3.47	8.05	12.56			13.5
3/14/1996	1	5.03	8.22	12.64			11.4
3/14/1996	3	4		12.34			12.3
3/14/1996	5	3.86		12.35			12.7
3/14/1996	7	3.7		12.34			13.1
3/14/1996	9	3.56		12.36			13.3
3/14/1996	11	3.5		12.43			13.4
4/11/1996	11	8.92	8.06	10.75			11.1
4/11/1996	1	8.89	8.02	10.69			10.2
4/11/1996	3	8.89		10.69			10.2
4/11/1996	5	8.93		10.7			10.2
4/11/1996	7	9.03		10.77			10.5
4/11/1996	9	9.02		10.81			10.6
5/23/1996	20.99	17.3	7.73	4.89			13
5/23/1996	1	22.42	8.08	8.52			
5/23/1996	3	22.45		8.5			10.8
5/23/1996	5	21.06		7.29			11.2
5/23/1996	7	18.94		5.65			12.1
5/23/1996	9	17.92		5.82			12.7
5/23/1996	11	17.7		5.53			12.8
5/23/1996	13	17.67		5.59			12.8
5/23/1996	15	17.52		5.34			12.8
5/23/1996	17	17.36		4.99			13
5/23/1996	19	17.35		4.95			13
6/6/1996	17	18.92	7.56	5.32			12.2
6/6/1996	1	20.64	7.74	7.5			10.5
6/6/1996	3	20.52		7.28			10.6
6/6/1996	5	20.36		7.11			10.7
6/6/1996	7	20.03		6.16			10.8
6/6/1996	9	19.84		5.8			10.9
6/6/1996	11	19.83		5.95			11.1
6/6/1996	13	19.28		5.61			11.7
6/6/1996	15	19.16		5.47			11.9
7/25/1996	19	25.54	7.53	0.63			13.8
7/25/1996	1	26.15	8.52	10.42			11.6
7/25/1996	3	26.38		8.81			12.1
7/25/1996	5	26.1		6.29			12.4
7/25/1996	7	25.74		2.67			13.1
7/25/1996	9	25.64		1.66			13.4

VA0063029 - Mizpah Nursing Home, Inc. WWTP
Ambient Stream Data from Monitoring Station 3-RPP010.60 (Rappahannock River)
2013 Permit Reissuance

Collection Date	Depth (m)	Temp (˚C)	pH (SU)	DO Probe (mg/L)	DO Winkler (mg/L)	Fdt DO Optical (mg/L)	Salinity (g/kg)
7/25/1996	11	25.61		1.29			13.6
7/25/1996	13	25.6		1.18			13.6
7/25/1996	15	25.56		0.79			13.7
7/25/1996	17	25.54		0.62			13.8
8/8/1996	11	25.66	7.45	0.38			13.7
8/8/1996	1	26.97	8.11	7.44			11.9
8/8/1996	3	26.97		6.68			11.9
8/8/1996	5	26.47		2.81			12.4
8/8/1996	7	26.15		1.3			12.9
8/8/1996	9	25.92		0.66			13.3
9/19/1996	10	24.09	7.7	4.47			12.7
9/19/1996	1	23.45	7.77	5.86			11.5
9/19/1996	3	23.49		5.81			11.4
9/19/1996	5	23.49		5.8			11.5
9/19/1996	7	23.67		5.47			11.8
9/19/1996	9	23.91		5.19			12.2
10/10/1996	10	18.43	8.07	6.8			12.2
10/10/1996	1	18.13	8.09	7.79			11.6
10/10/1996	3	18.18		7.66			11.6
10/10/1996	5	18.14		7.77			11.6
10/10/1996	7	18.17		7.52			11.5
10/10/1996	9	18.37		6.91			12.2
11/7/1996	11	14.85	7.91	7.7			13.8
11/7/1996	1	14.86	8.03	9.3			11.9
11/7/1996	3	14.89		9.22			12
11/7/1996	5	14.94		8.28			12.4
11/7/1996	7	15.07		7.59			13.3
11/7/1996	9	14.85		7.67			13.7
12/5/1996	12	8.56	7.73	9.93			14.5
12/5/1996	1	7.81	7.74	11.2			11
12/5/1996	3	8.03		11.23			11.2
12/5/1996	5	8.2		11.22			11.4
12/5/1996	7	8.34		11.15			12
12/5/1996	9	8.42		10.82			12.7
12/5/1996	11	8.55		9.9			14.5
1/14/1997	10	5.41	7.6	11.33			11.7
1/14/1997	1	4.53	7.6	11.6			10
1/14/1997	3	4.56		11.62			10
1/14/1997	5	4.61		11.63			10
1/14/1997	7	4.88		11.59			10
1/14/1997	9	5.36		11.36			11.1
3/12/1997	10	8.27	7.75	11.13			11.6
3/12/1997	1	9.3	7.73	11.26			9.4
3/12/1997	3	9.26		11.2			9.5
3/12/1997	5	9.13		11.17			9.6
3/12/1997	7	8.81		11.3			10.3
3/12/1997	9	8.57		11.56			11
4/14/1997	9	11.88	8.2	10			12.2
4/14/1997	1	12.03	8.41	10.78			10.3

VA0063029 - Mizpah Nursing Home, Inc. WWTP
Ambient Stream Data from Monitoring Station 3-RPP010.60 (Rappahannock River)
2013 Permit Reissuance

Collection Date	Depth (m)	Temp (˚C)	pH (SU)	DO Probe (mg/L)	DO Winkler (mg/L)	Fdt DO Optical (mg/L)	Salinity (g/kg)
4/14/1997	3	12.04		10.72			10.4
4/14/1997	5	12.04		10.57			10.4
4/14/1997	7	12.07		10.43			10.6
5/8/1997	11	14.47	7.65	7.21			13.9
5/8/1997	1	15.15	8.09	9.45			11.4
5/8/1997	3	15.15		9.45			11.4
5/8/1997	5	15.32		9.57			11.6
5/8/1997	7	15.11		8.03			12.5
5/8/1997	9	14.76		7.66			13.3
6/12/1997	16	17.96	7.75	7.12			14.8
6/12/1997	1	20.18	7.89	8.53			11.9
6/12/1997	3	20.1		8.4			12
6/12/1997	5	18.96		7.14			12.8
6/12/1997	7	18.7		7.43			13.4
6/12/1997	9	18.37		7.3			13.8
6/12/1997	11	18.29		7.67			14.1
6/12/1997	13	18.13		7.46			14.4
6/12/1997	15	18.03		7.19			14.6
8/13/1997	11	25.76	7.61	2.62			19.6
8/13/1997	1	26.88	8	6.29			15.9
8/13/1997	3	26.75		6.08			16
8/13/1997	5	26.62		5.75			16
8/13/1997	7	26.42		2.49			17
8/13/1997	9	26.01		3.14			18.4
9/15/1997	11	24.27	7.7	3.89			20.3
9/15/1997	1	24.48	7.99	7.61			17.2
9/15/1997	3	24.56		7.27			17.5
9/15/1997	5	24.68		6.95			18.1
9/15/1997	7	24.43		4.76			19.3
9/15/1997	9	24.32		4.08			20
10/9/1997	12	20.54	7.75	4.29			20.8
10/9/1997	1	21.56	8.11	7.97			18.6
10/9/1997	3	21.57		7.85			18.7
10/9/1997	5	21.37		6.45			18.9
10/9/1997	7	20.7		4.65			19.8
10/9/1997	9	20.6		4.5			20.3
10/9/1997	11	20.54		4.33			20.7
11/12/1997	11	13.25	7.89	8.1			19.7
11/12/1997	1	12.38	7.94	9.2			17.4
11/12/1997	3	12.78		8.99			18.1
11/12/1997	5	12.82		8.8			18.5
11/12/1997	7	13.18		8.27			19.4
11/12/1997	9	13.24		8.12			19.7
12/4/1997	19.99	9	7.88	10.17			18.6
12/4/1997	1	8.62	7.92	10.78			17.1
12/4/1997	3	8.72		10.59			17.4
12/4/1997	5	8.84		10.39			17.8
12/4/1997	7	8.91		10.22			18
12/4/1997	9	8.96		10.2			18.3

VA0063029 - Mizpah Nursing Home, Inc. WWTP
Ambient Stream Data from Monitoring Station 3-RPP010.60 (Rappahannock River)
2013 Permit Reissuance

Collection Date	Depth (m)	Temp (˚C)	pH (SU)	DO Probe (mg/L)	DO Winkler (mg/L)	Fdt DO Optical (mg/L)	Salinity (g/kg)
12/4/1997	11	8.98		10.19			18.4
12/4/1997	13	8.98		10.17			18.5
12/4/1997	15	8.99		10.16			18.5
12/4/1997	17	8.99		10.16			18.5
12/4/1997	19	8.99		10.17			18.5
1/13/1998	11	7.07	7.86	10.2			19.4
1/13/1998	1	7.5	8.02	11.31			16.4
1/13/1998	3	7.35		11.2			16.9
1/13/1998	5	7.32		10.73			17.7
1/13/1998	7	7.21		10.41			18.6
1/13/1998	9	7.07		10.3			18.8
2/9/1998	11	5.7	7.42	10.44			12.9
2/9/1998	1	4.85	7.61	11.4			6.8
2/9/1998	3	5.51		11.16			9
2/9/1998	5	5.6		10.95			11
2/9/1998	7	5.63		10.48			12.2
2/9/1998	9	5.69		10.36			12.9
3/5/1998	19	7.81	8	11.2			12.7
3/5/1998	1	7.9	8.12	11.76			10.5
3/5/1998	3	7.92		11.76			10.5
3/5/1998	5	8.07		11.72			10.8
3/5/1998	7	8		11.58			11.8
3/5/1998	9	7.97		11.52			11.9
3/5/1998	11	7.96		11.48			12
3/5/1998	13	7.95		11.48			12
3/5/1998	15	7.95		11.47			12
3/5/1998	17	7.94		11.3			12.1
4/15/1998	17	12.2	7.95	8.41			12.5
4/15/1998	1	13.33	8.05	9.06			9.3
4/15/1998	3	13.31		9.03			9.3
4/15/1998	5	13.33		9.01			9.3
4/15/1998	7	13.12		8.4			10
4/15/1998	9	12.56		7.5			10.8
4/15/1998	11	12.46		8.28			11.3
4/15/1998	13	12.37		8.37			11.6
4/15/1998	15	12.34		8.48			11.8
5/7/1998	12	15.46	7.43	3.75			12.5
5/7/1998	1	18.49	8.86	11.4			8.8
5/7/1998	3	18.47		11.52			9.1
5/7/1998	5	17.22		8.18			9.8
5/7/1998	7	16.91		7.35			10.7
5/7/1998	9	15.67		4.36			12
5/7/1998	11	15.54		4.03			12.4
6/11/1998	13	20.69	7.11	2.15			12.4
6/11/1998	1	21.1	7.86	7.7			9.9
6/11/1998	3	21.12		7.48			10
6/11/1998	5	21.13		7.44			10.1
6/11/1998	7	21.17		6.65			10.3
6/11/1998	9	21.26		5.46			10.6

VA0063029 - Mizpah Nursing Home, Inc. WWTP
Ambient Stream Data from Monitoring Station 3-RPP010.60 (Rappahannock River)
2013 Permit Reissuance

Collection Date	Depth (m)	Temp (˚C)	pH (SU)	DO Probe (mg/L)	DO Winkler (mg/L)	Fdt DO Optical (mg/L)	Salinity (g/kg)
6/11/1998	11	21.15		4.69			11.1
7/9/1998	11	24.57	7.16	0.22			14.7
7/9/1998	1	26.6	8.15	6.37			11.4
7/9/1998	3	26.61		6.32			11.5
7/9/1998	5	26.62		6.25			11.5
7/9/1998	7	26.67		5.74			11.6
7/9/1998	9	25.67		0.94			13.1
8/6/1998	14	26.38	7.45	0.2			16.3
8/6/1998	1	26.33	8.28	7.6			13.2
8/6/1998	3	26.28		7.01			13.4
8/6/1998	5	26.26		6.68			13.5
8/6/1998	7	26.42		5.58			13.7
8/6/1998	9	26.33		2.23			14.9
8/6/1998	11	26.33		0.36			15.6
9/10/1998	11	24.97	7.97	6.12			16.2
9/10/1998	1	24.85	7.99	6.13			16.2
9/10/1998	3	24.86		6.13			16.2
9/10/1998	5	24.86		6.14			16.2
9/10/1998	7	24.92		6.11			16.2
9/10/1998	9	24.87		6.13			16.2
10/8/1998	19	21.59	7.81	6			17.7
10/8/1998	1	21.63	7.8	5.98			17.6
10/8/1998	3	21.63		5.98			17.6
10/8/1998	5	21.64		5.95			17.6
10/8/1998	7	21.65		5.94			17.6
10/8/1998	9	21.64		5.99			17.6
10/8/1998	11	21.61		6			17.6
10/8/1998	13	21.62		5.93			17.7
10/8/1998	15	21.67		5.86			17.7
10/8/1998	17	21.64		5.93			17.7
11/12/1998	13	13.08	8.04	8.03			19.2
11/12/1998	1	13.31	8.13	8.78			18.3
11/12/1998	3	13.29		8.75			18.3
11/12/1998	5	13.3		8.74			18.3
11/12/1998	7	13.3		8.64			18.3
11/12/1998	9	13.18		8.32			18.6
11/12/1998	11	13.07		8.01			19
12/10/1998	13	13.19	7.86	8.58			20
12/10/1998	1	12.76	7.88	8.92			19.1
12/10/1998	3	12.78		8.95			19.2
12/10/1998	5	12.82		8.91			19.2
12/10/1998	7	13.03		8.88			19.4
12/10/1998	9	13.11		8.77			19.7
12/10/1998	11	13.14		8.78			19.8
1/11/1999	16	4.23	7.63	11.03			19.9
1/11/1999	1	3.47	7.78	11.33			18.3
1/11/1999	3	3.53		11.36			18.8
1/11/1999	5	3.64		11.39			18.3
1/11/1999	7	3.76		11.32			18.3

VA0063029 - Mizpah Nursing Home, Inc. WWTP
Ambient Stream Data from Monitoring Station 3-RPP010.60 (Rappahannock River)
2013 Permit Reissuance

Collection Date	Depth (m)	Temp (˚C)	pH (SU)	DO Probe (mg/L)	DO Winkler (mg/L)	Fdt DO Optical (mg/L)	Salinity (g/kg)
1/11/1999	9	3.87		11.1			19.3
1/11/1999	11	4.16		10.93			19.4
1/11/1999	13	4.17		10.93			19.6
1/11/1999	15	4.2		10.95			19.5
2/11/1999	18	6.52	7.2	9.77			19.5
2/11/1999	1	7.29	7.3	9.97			17.3
2/11/1999	3	7.11		9.81			17.7
2/11/1999	5	7.09		9.6			18.5
2/11/1999	7	6.92		9.39			19.6
2/11/1999	9	6.75		9.3			19.3
2/11/1999	11	6.61		9.32			19.1
2/11/1999	13	6.57		9.34			19.3
2/11/1999	15	6.55		9.35			19.6
2/11/1999	17	6.52		9.44			19.7
3/18/1999	12	5.58	7.09	10.93			17
3/18/1999	1	6.01	7.16	10.53			16.9
3/18/1999	3	6		10.51			16.2
3/18/1999	5	5.98		10.52			16.9
3/18/1999	7	5.95		10.49			16.5
3/18/1999	9	5.72		10.48			16.8
3/18/1999	11	5.54		10.63			16.8
4/8/1999	17	10.15	7.81	9.87			16.9
4/8/1999	1	12.76	7.98	10.56			15.1
4/8/1999	3	12.82		10.53			15.1
4/8/1999	5	12.15		10.4			15.4
4/8/1999	7	11.11		10.12			15.7
4/8/1999	9	10.81		10.16			15.9
4/8/1999	11	10.74		10.1			16
4/8/1999	13	10.67		10			16.1
4/8/1999	15	10.42		9.87			16.3
5/10/1999	12	14.93	7.82	7.26			16.5
5/10/1999	1	17.69	7.92	8.28			15.1
5/10/1999	3	17.11		7.96			15.1
5/10/1999	5	16.83		7.7			15.4
5/10/1999	7	15.26		7.5			15.6
5/10/1999	9	15.23		7.24			16.2
5/10/1999	11	15.16		7.22			16.3
6/14/1999	20	23.34	7.74	4.96			16.9
6/14/1999	1	23.56	7.97	6.93			16.1
6/14/1999	3	23.54		6.5			16.2
6/14/1999	5	23.52		6.23			16.3
6/14/1999	7	23.5		5.92			16.4
6/14/1999	9	23.47		5.64			16.6
6/14/1999	11	23.47		5.4			16.7
6/14/1999	13	23.36		4.97			16.9
6/14/1999	15	23.34		4.88			16.9
6/14/1999	17	23.34		4.89			16.9
6/14/1999	19	23.34		4.89			16.9
7/8/1999	18	24.32	7.31	2.51			17.1

VA0063029 - Mizpah Nursing Home, Inc. WWTP
Ambient Stream Data from Monitoring Station 3-RPP010.60 (Rappahannock River)
2013 Permit Reissuance

Collection Date	Depth (m)	Temp (˚C)	pH (SU)	DO Probe (mg/L)	DO Winkler (mg/L)	Fdt DO Optical (mg/L)	Salinity (g/kg)
7/8/1999	1	27.97	8.18	7.75			14.8
7/8/1999	3	27.93		7.45			14.9
7/8/1999	5	26.34		4.92			16
7/8/1999	7	25.51		4.21			16.7
7/8/1999	9	24.91		3.33			16.9
7/8/1999	11	24.51		2.75			17
7/8/1999	13	24.5		2.75			17
7/8/1999	15	24.47		2.68			17
7/8/1999	17	24.38		2.54			17.1
8/5/1999	12	28.49	8.08	5.4			18.2
8/5/1999	1	28.5	8.06	5			18.2
8/5/1999	3	28.51		5.15			18.2
8/5/1999	5	28.5		5.19			18.1
8/5/1999	7	28.5		5.27			18.1
8/5/1999	9	28.5		5.22			18.2
8/5/1999	11	28.48		5.34			18.2
9/9/1999	11	21.88	7.61	4.64			19.7
9/9/1999	1	22.49	7.76	6.25			18
9/9/1999	3	22.49		6.11			18.1
9/9/1999	5	22.12		5.97			18.3
9/9/1999	7	22.11		5.65			18.4
9/9/1999	9	21.98		4.86			18.7
10/12/1999	12	19.72	7.72	5.7			19.7
10/12/1999	1	19.77	7.86	7.32			17.2
10/12/1999	3	19.98		6.86			17.4
10/12/1999	5	20.05		5.86			18.2
10/12/1999	7	19.85		5.79			19.4
10/12/1999	9	19.77		5.55			19.5
10/12/1999	11	19.74		5.63			19.5
11/4/1999	15	15.39	7.88	8.39			18.6
11/4/1999	1	14.95	7.9	8.56			18.2
11/4/1999	3	15		8.52			18.3
11/4/1999	5	15.07		8.49			18.3
11/4/1999	7	15.2		8.41			18.4
11/4/1999	9	15.31		8.36			18.4
11/4/1999	11	15.32		8.37			18.5
11/4/1999	13	15.33		8.39			18.5
12/9/1999	12	9.82	7.67	9.52			19.5
12/9/1999	1	9.45	7.75	9.93			18.5
12/9/1999	3	9.79		9.75			18.9
12/9/1999	5	9.79		9.68			19
12/9/1999	7	9.78		9.41			19.1
12/9/1999	9	9.82		9.42			19.4
12/9/1999	11	9.82		9.45			19.5
1/13/2000	16	7.49	7.63	9.79			19.1
1/13/2000	1	7.45	7.73	10.3			17.9
1/13/2000	3	7.46		10.27			17.9
1/13/2000	5	7.49		10.15			18
1/13/2000	7	7.56		10.09			18.2

VA0063029 - Mizpah Nursing Home, Inc. WWTP
Ambient Stream Data from Monitoring Station 3-RPP010.60 (Rappahannock River)
2013 Permit Reissuance

Collection Date	Depth (m)	Temp (˚C)	pH (SU)	DO Probe (mg/L)	DO Winkler (mg/L)	Fdt DO Optical (mg/L)	Salinity (g/kg)
1/13/2000	9	7.62		10.01			18.6
1/13/2000	11	7.59		9.9			18.9
1/13/2000	13	7.57		9.87			19
1/13/2000	15	7.56		9.82			19.1
2/10/2000	13	1.95	7.43	12.85			18.8
2/10/2000	1	2.17	7.62	13.34			18.4
2/10/2000	3	2.08		13.01			18.5
2/10/2000	5	2.05		12.78			18.7
2/10/2000	7	2		12.42			18.7
2/10/2000	9	1.95		12.34			18.8
2/10/2000	11	1.94		12.61			18.8
3/9/2000	10	8.5	7.67	10.51			16.6
3/9/2000	1	10.35	7.74	10.56			15.5
3/9/2000	3	9.55		10.61			16
3/9/2000	5	9.28		10.53			16.2
3/9/2000	7	8.68		10.45			16.4
3/9/2000	9	8.54		10.47			16.6
4/6/2000	13	12.24	7.65	8.88			17.1
4/6/2000	1	12.41	7.67	9.16			15.3
4/6/2000	3	12.42		9.16			15.3
4/6/2000	5	12.43		9.14			15.3
4/6/2000	7	12.64		9.09			15.8
4/6/2000	9	12.64		9.02			16.3
4/6/2000	11	12.38		8.86			16.4
5/11/2000	10	16.29	7.81	6.4			13.8
5/11/2000	1	19.1	7.84	7.78			11.4
5/11/2000	3	19.12		7.79			11.4
5/11/2000	5	18.88		7.6			11.7
5/11/2000	7	18.08		7.01			12.3
5/11/2000	9	16.81		6.65			13.5
6/8/2000	12	20.5	8.03	6.93			13.7
6/8/2000	1	20.61	8.11	7.94			13.3
6/8/2000	3	20.63		7.9			13.4
6/8/2000	5	20.68		7.83			13.4
6/8/2000	7	20.71		7.56			13.5
6/8/2000	9	20.64		7.18			13.7
6/8/2000	11	20.57		7.03			13.7
7/6/2000	12	23.5	7.7	3.75			16.9
7/6/2000	1	23.76	8.09	7.38			16
7/6/2000	3	23.93		6.02			16.1
7/6/2000	5	23.5		3.87			16.5
7/6/2000	7	23.44		3.72			16.7
7/6/2000	9	23.46		3.81			16.8
7/6/2000	11	23.46		3.76			16.8
8/10/2000	12	25.81	7.31	0.49			17.7
8/10/2000	1	27.17	8.14	6.05			14.4
8/10/2000	3	27.15		5.81			14.5
8/10/2000	5	26.92		4.66			15.9
8/10/2000	7	26.07		1.31			17.3

VA0063029 - Mizpah Nursing Home, Inc. WWTP
Ambient Stream Data from Monitoring Station 3-RPP010.60 (Rappahannock River)
2013 Permit Reissuance

Collection Date	Depth (m)	Temp (˚C)	pH (SU)	DO Probe (mg/L)	DO Winkler (mg/L)	Fdt DO Optical (mg/L)	Salinity (g/kg)
8/10/2000	9	25.89		0.51			17.5
8/10/2000	11	25.81		0.44			17.7
9/12/2000	19	23.42	7.44	4.51			17.8
9/12/2000	1	24.66	8.03	7.85			14.7
9/12/2000	3	24.79		7.93			14.8
9/12/2000	5	24.74		7.65			14.9
9/12/2000	7	23.88		3.85			15.6
9/12/2000	9	23.59		3.69			16.2
9/12/2000	11	23.48		4.09			16.7
9/12/2000	13	23.48		4.55			17.2
9/12/2000	15	23.42		4.36			17.4
9/12/2000	17	23.42		4.39			17.6
10/12/2000	11	17.83	7.87	7.24			16.3
10/12/2000	1	17.24	7.97	7.89			15.7
10/12/2000	3	17.24		7.93			15.7
10/12/2000	5	17.22		7.9			15.7
10/12/2000	7	17.36		7.71			15.8
10/12/2000	9	17.88		6.96			16.1
11/13/2000	1	13.8	7.9	8.84			16.6
11/13/2000	3	13.95		8.76			16.7
11/13/2000	5	14.05		8.61			16.7
11/13/2000	7	14.12		8.47			16.9
11/13/2000	9	14.42		7.97			17.5
11/13/2000	11	14.48		7.73			18
11/13/2000	13	14.6		7.25			19
11/13/2000	15	14.67		6.96			19.6
11/13/2000	17	14.7		6.89			19.8
11/13/2000	18	14.7	7.72	6.98			19.8
12/7/2000	1	5.91	7.91	11.27			18.1
12/7/2000	3	5.95		11.25			18.1
12/7/2000	5	6.26		10.84			18.7
12/7/2000	7	6.5		10.59			19.2
12/7/2000	9	6.54		10.52			19.4
12/7/2000	11	6.55		10.45			19.6
12/7/2000	13	6.57		10.41			19.7
12/7/2000	15	6.57		10.31			19.8
12/7/2000	17	6.6		10.17			19.8
12/7/2000	18	6.6	7.85	10.39			19.9
1/18/2001	1	2.41	7.78	12.88			19.3
1/18/2001	3	2.41		12.75			19.6
1/18/2001	5	2.43		12.62			19.6
1/18/2001	7	2.26		12.51			19.9
1/18/2001	9	2.21		12.48			20
1/18/2001	11	2.19		12.46			20.1
1/18/2001	12	2.18	7.66	12.47			20.2
2/8/2001	1	2.93	7.85	13.51			19.4
2/8/2001	3	2.63		13.55			19.7
2/8/2001	5	2.63		13.33			20.1
2/8/2001	7	2.33		13.35			20.3

VA0063029 - Mizpah Nursing Home, Inc. WWTP
Ambient Stream Data from Monitoring Station 3-RPP010.60 (Rappahannock River)
2013 Permit Reissuance

Collection Date	Depth (m)	Temp (˚C)	pH (SU)	DO Probe (mg/L)	DO Winkler (mg/L)	Fdt DO Optical (mg/L)	Salinity (g/kg)
2/8/2001	9	2.24		13.33			20.4
2/8/2001	11	2.09		13.51			20.5
2/8/2001	12	1.98	7.75	13.65			20.5
3/15/2001	1	7.32	7.62	10.7			18.1
3/15/2001	3	7.41		10.72			18.2
3/15/2001	5	7.4		10.62			18.3
3/15/2001	7	7.03		10.47			18.9
3/15/2001	9	6.94		10.59			19.1
3/15/2001	11	6.83	7.55	10.45			19.2
4/12/2001	1	12.81	7.78	9.04			15.7
4/12/2001	3	12.51		8.88			16.1
4/12/2001	5	12.35		8.89			16.3
4/12/2001	7	12.45		8.93			16.4
4/12/2001	9	12.5		8.75			16.5
4/12/2001	11	11.66		8.41			16.9
4/12/2001	13	11.32		8.36			17.3
4/12/2001	15	11.23		8.37			17.4
4/12/2001	17	11.18		8.37			17.4
4/12/2001	19	11.17		8.32			17.5
4/12/2001	20	11.14	7.66	8.3			17.5
5/10/2001	1	18.35	7.93	8.36			14.9
5/10/2001	3	18.35		8.39			14.9
5/10/2001	5	18.33		8.33			15.1
5/10/2001	7	17.85		7.49			15.3
5/10/2001	9	17.6		7.39			15.6
5/10/2001	11	17.32		7.12			15.9
5/10/2001	12	17.27	7.76	7.2			15.9
6/7/2001	1	22.91	7.51	9.36			13.9
6/7/2001	3	22.58		9.93			14.3
6/7/2001	5	22.48		10.03			14.5
6/7/2001	7	21.06		5.41			16.4
6/7/2001	9	20.83		4.76			16.8
6/7/2001	11	20.53		3.66			17.3
6/7/2001	12	20.5	8.28	3.67			17.4
7/12/2001	1	26.47	7.96	6.88			16.3
7/12/2001	3	26.48		6.82			16.4
7/12/2001	5	26.52		6.64			16.4
7/12/2001	7	26.2		4.93			17.1
7/12/2001	9	25.93		3.94			17.8
7/12/2001	11	26.04	7.75	4.41			18
8/9/2001	1	27.16	8.08	8.3			16.8
8/9/2001	3	26.98		7.81			17.2
8/9/2001	5	25.43		5.04			18.1
8/9/2001	7	24.85		3.93			18.5
8/9/2001	9	24.7		4.34			19.1
8/9/2001	11	24.63		4.07			19.1
8/9/2001	13	24.53		4.08			19.3
8/9/2001	15	24.47		4.14			19.5
8/9/2001	17	24.47	7.63	4.16			19.5

VA0063029 - Mizpah Nursing Home, Inc. WWTP
Ambient Stream Data from Monitoring Station 3-RPP010.60 (Rappahannock River)
2013 Permit Reissuance

Collection Date	Depth (m)	Temp (˚C)	pH (SU)	DO Probe (mg/L)	DO Winkler (mg/L)	Fdt DO Optical (mg/L)	Salinity (g/kg)
9/6/2001	1	25.79	7.9	6.24			17.2
9/6/2001	3	25.78		6.22			17.2
9/6/2001	5	25.83		6.19			17.2
9/6/2001	7	26.08		6.03			17.3
9/6/2001	9	26.04		4.71			18
9/6/2001	11	26.01		3.57			18.4
9/6/2001	12	26	7.64	3.51			18.4
10/4/2001	1	19.81	7.87	8			18.1
10/4/2001	3	19.81		7.96			18.2
10/4/2001	5	19.81		7.85			18.2
10/4/2001	7	19.79		7.56			18.3
10/4/2001	9	19.59		6.64			18.7
10/4/2001	11	19.45		7.13			18.8
10/4/2001	12	19.29	7.7	6.85			18.9
11/8/2001	1	14.03	7.73	8.74			20
11/8/2001	3	14.04		8.75			20
11/8/2001	5	14		8.7			20
11/8/2001	7	14.41		8.44			20.3
11/8/2001	9	14.45		8.39			20.6
11/8/2001	11	14.36		8.49			20.7
11/8/2001	13	14.35	7.64	8.61			20.7
12/6/2001	1	13.19	7.72	9.11			20.3
12/6/2001	3	13.35		8.91			20.5
12/6/2001	5	13.39		8.46			20.9
12/6/2001	7	13.38		8.28			21
12/6/2001	9	13.33		8.24			21.3
12/6/2001	11	13.33		8.26			21.3
12/6/2001	13	13.33		8.3			21.3
12/6/2001	14	13.3	7.57	8.36			21.3
1/16/2002	1	4.92	7.15	10.88			21.5
1/16/2002	3	4.99		10.88			21.5
1/16/2002	5	4.94		10.89			21.5
1/16/2002	7	4.97		10.88			21.6
1/16/2002	9	4.95		10.86			21.7
1/16/2002	11	5		10.72			22
1/16/2002	13	5.05		10.7			22.2
1/16/2002	15	5.06	7.11	10.77			22.2
2/14/2002	1	6.49	7.24	10.2			21
2/14/2002	3	6.39		10.21			21.1
2/14/2002	5	6.41		10.24			21
2/14/2002	7	6.53		10.19			21.1
2/14/2002	9	6.65		10.15			21.3
2/14/2002	11	6.62		10.09			21.3
2/14/2002	13	6.59		10.01			21.5
2/14/2002	14	6.54	7.2	10.03			21.5
3/14/2002	1	9.25		9.79			21.2
3/14/2002	3	9.25		9.79			21.2
3/14/2002	5	9.22		9.84			21.2
3/14/2002	7	9.19		9.88			21.3

VA0063029 - Mizpah Nursing Home, Inc. WWTP
Ambient Stream Data from Monitoring Station 3-RPP010.60 (Rappahannock River)
2013 Permit Reissuance

Collection Date	Depth (m)	Temp (˚C)	pH (SU)	DO Probe (mg/L)	DO Winkler (mg/L)	Fdt DO Optical (mg/L)	Salinity (g/kg)
3/14/2002	9	9.07		9.94			21.2
3/14/2002	11	8.99		9.89			21.2
3/14/2002	13	8.88		9.73			21.8
4/11/2002	1	13.13	7.9	9.5			19.8
4/11/2002	3	13.13		9.3			19.9
4/11/2002	5	13.17		9.25			19.9
4/11/2002	7	13.05		8.99			20.1
4/11/2002	9	12.99		9.03			20.3
4/11/2002	11	12.57	7.71	8.86			20.7
5/16/2002	1	19.3	7.87	8.05			18.5
5/16/2002	3	19.33	7.87	8.08			18.5
6/13/2002	1	24.83	8.03	7.34			18.7
6/13/2002	3	24.86	8.02	7.2			18.7
6/13/2002	5	24.73	7.95	6.3			18.8
6/13/2002	7	24.21	7.84	5.7			19
6/13/2002	9	24.11	7.83	5.7			19
6/13/2002	11	24.09	7.83	5.66			19
6/13/2002	13	23.6	7.78	5.3			19
7/11/2002	1	27.56	7.91	5.12			18.6
7/11/2002	3	27.57	7.91	5.09			18.6
7/11/2002	5	27.56	7.9	5.01			18.6
7/11/2002	7	27.54	7.89	4.82			18.7
7/11/2002	9	27.54	7.86	4.73			18.7
7/11/2002	11	27.5	7.72	2.91			18.8
7/11/2002	13	27.19	7.65	2.45			20
7/11/2002	15	27.14	7.64	2.45			19.9
8/7/2002	1	28.01	7.8	4.95			19
8/7/2002	3	28.02	7.8	4.93			19.2
8/7/2002	5	28.01	7.79	4.86			19.1
8/7/2002	7	27.98	7.77	4.67			19.2
8/7/2002	9	28.28	7.61	2.76			19.4
8/7/2002	11	28.09	7.38	1.21			19.8
8/7/2002	13	27.99	7.34	0.79			20.1
8/7/2002	15	27.89	7.31	0.6			20.3
9/12/2002	1	24.84	7.88	6.11			20
9/12/2002	3	24.86	7.87	6.21			20
9/12/2002	5	24.86	7.87	6.24			20
9/12/2002	7	24.88	7.87	6.14			20
9/12/2002	9	24.88	7.86	6.03			20
9/12/2002	11	24.88	7.86	6.14			20
9/12/2002	12	24.89	7.86	6.92			20
10/10/2002	1	23.1	7.61	6.13			21.1
10/10/2002	3	23.11	7.6	6.13			21.1
10/10/2002	5	23.16	7.59	6.11			21.2
10/10/2002	7	23.05	7.61	6.29			21.2
10/10/2002	9	23.02	7.61	6.33			21.1
10/10/2002	11	23.03	7.61	6.32			21.2
10/10/2002	12	23.03	7.6	6.37			21.1
11/25/2002	1	10.16		10.17			18.2

VA0063029 - Mizpah Nursing Home, Inc. WWTP
Ambient Stream Data from Monitoring Station 3-RPP010.60 (Rappahannock River)
2013 Permit Reissuance

Collection Date	Depth (m)	Temp (˚C)	pH (SU)	DO Probe (mg/L)	DO Winkler (mg/L)	Fdt DO Optical (mg/L)	Salinity (g/kg)
11/25/2002	3	10.75		9.81			18.7
11/25/2002	5	10.8		9.47			18.9
11/25/2002	7	10.95		9.4			19.1
11/25/2002	9	11.11		9.15			19.3
11/25/2002	11	11.14		9.03			19.5
11/25/2002	13	11.15		9.07			19.5
12/17/2002	1	4.98		11.23			18.2
12/17/2002	3	5.01		11.26			18.2
12/17/2002	5	5.09		11.24			18.4
12/17/2002	7	5.19		11.2			18.6
12/17/2002	9	5.31		11.14			18.9
12/17/2002	11	5.34		11.14			18.9
12/17/2002	13	5.36		11.22			19
12/17/2002	14	5.37		11.3			19
2/6/2003	1	1.66	7.58	12.38			15.5
2/6/2003	3	1.7	7.56	12.37			15.5
2/6/2003	5	1.83	7.55	12.31			15.6
2/6/2003	7	1.73	7.51	12.24			15.7
2/6/2003	9	1.67	7.48	12.26			15.8
2/6/2003	11	1.71	7.48	12.29			15.9
2/6/2003	13	1.67	7.44	12.28			16
2/6/2003	15	1.59	7.4	12.28			16.2
3/10/2003	1	5.41	7.96	13.17			12
3/10/2003	3	5.49	7.95	13.14			12
3/10/2003	5	4.94	7.82	13.09			12.9
3/10/2003	7	4.06	7.69	12.47			14.2
3/10/2003	9	3.73	7.62	12.33			15.3
3/10/2003	11	3.74	7.6	12.36			15.3
3/10/2003	12	3.75	7.37	12.32			15.3
4/3/2003	1	10.62	8.51	10.62			10.9
4/3/2003	3	10.65	8.56	10.57			10.9
4/3/2003	5	10.69	8.65	10.43			11
4/3/2003	7	9.36	8.64	9.46			13.5
4/3/2003	9	8.81	8.65	9.61			15.4
4/3/2003	11	8.73	8.64	9.62			15.9
4/3/2003	13	8.71	8.62	9.71			16
4/3/2003	14	8.71	8.56	9.77			16.1
5/15/2003	1	17.84	8.58	9.31			10.96
5/15/2003	3	17.83	8.58	9.25			10.96
5/15/2003	5	17.83	8.58	8.79			10.97
5/15/2003	7	17.08	8.15	6.46			12.58
5/15/2003	9	16.45	7.85	5.28			14.26
5/15/2003	11	15.47	7.54	3.92			16.4
5/15/2003	13	15.04	7.45	3.61			17.65
5/15/2003	14	14.98	7.44	3.78			17.86
6/12/2003	1	22.37	8.04	7.35			9.83
6/12/2003	3	22.12	8.04	7.21			10.22
6/12/2003	5	21.51	7.96	6.64			11.25
6/12/2003	7	19.2	7.41	3.2			13.12

VA0063029 - Mizpah Nursing Home, Inc. WWTP
Ambient Stream Data from Monitoring Station 3-RPP010.60 (Rappahannock River)
2013 Permit Reissuance

Collection Date	Depth (m)	Temp (˚C)	pH (SU)	DO Probe (mg/L)	DO Winkler (mg/L)	Fdt DO Optical (mg/L)	Salinity (g/kg)
6/12/2003	9	18.98	7.36	2.9			13.27
6/12/2003	11	18.35	7.27	2.19			13.85
6/12/2003	13	18.27	7.24	2.12			13.92
6/12/2003	14	18.22	7.24	2.13			13.94
7/2/2003	1	26.74	8.75	8.85			9.41
7/2/2003	3	26.84	8.76	8.91			9.47
7/2/2003	5	25.57	8.15	4.55			10.32
7/2/2003	7	23.67	7.24	0.22			11.24
7/2/2003	9	22.61	7.23	0.21			12.65
7/2/2003	11	22.38	7.24	0.24			13.45
7/2/2003	12	22.33	7.24	0.3			13.91
8/14/2003	1	27.55	8.4	9.01			12.9
8/14/2003	3	27.65	8.43	9			13.02
8/14/2003	5	27.69	8.3	7.64			13.49
8/14/2003	7	27.37	8.22	6.37			13.97
8/14/2003	9	26.81	7.82	3.4			14.54
8/14/2003	11	26.67	7.73	2.86			14.71
8/14/2003	12	26.5	7.67	2.51			15.02
9/11/2003	1	24.37	7.95	6.88			13.1
9/11/2003	3	24.37	7.95	6.88			13.12
9/11/2003	5	24.59	7.93	6.93			13.41
9/11/2003	7	24.76	7.9	6.64			13.87
9/11/2003	9	25.02	7.82	5.06			14.38
9/11/2003	11	25.22	7.58	2.68			15.67
9/11/2003	12	25.26	7.49	2.21			16.16
10/9/2003	1	20.34	8.2	9.44			11.24
10/9/2003	3	20.36	8.21	9.35			11.24
10/9/2003	5	20.34	7.91	7.29			11.61
10/9/2003	7	20.33	7.71	5.96			12.04
10/9/2003	9	20.44	7.46	4.04			13.87
10/9/2003	11	20.45	7.46	3.82			14.72
10/9/2003	13	20.52	7.41	3.69			14.92
11/6/2003	1	17.82	7.97	8.94			12.72
11/6/2003	3	17.35	7.85	8.14			13.31
11/6/2003	5	16.59	7.78	7.6			14.03
11/6/2003	7	16.48	7.75	7.44			14.24
11/6/2003	9	16.5	7.77	7.49			14.3
11/6/2003	11	16.5	7.78	7.59			14.36
11/6/2003	13	16.5	7.78	7.54			14.37
11/6/2003	15	16.51	7.77	7.56			14.37
11/6/2003	17	16.52	7.77	7.63			14.39
12/4/2003	1	8.42	7.9	11.01			10.27
12/4/2003	3	9.04	7.96	10.96			10.78
12/4/2003	5	9.14	7.97	10.91			10.96
12/4/2003	7	9.87	8.03	10.47			12.82
12/4/2003	9	9.79	8.08	10.18			13.64
12/4/2003	11	9.78	8.08	10.13			13.82
12/4/2003	13	9.79	8.09	10.17			13.88
12/4/2003	15	9.79	8.09	10.17			13.89

VA0063029 - Mizpah Nursing Home, Inc. WWTP
Ambient Stream Data from Monitoring Station 3-RPP010.60 (Rappahannock River)
2013 Permit Reissuance

Collection Date	Depth (m)	Temp (˚C)	pH (SU)	DO Probe (mg/L)	DO Winkler (mg/L)	Fdt DO Optical (mg/L)	Salinity (g/kg)
1/8/2004	1	5.99	8.02	12.14			9.37
1/8/2004	3	6.06	8.01	12.09			9.39
1/8/2004	5	6.3	8	11.97			9.57
1/8/2004	7	6.5	8	11.86			9.71
1/8/2004	9	6.79	7.96	11.57			10.12
1/8/2004	10	6.78	7.88	11.48			10.66
2/11/2004	1	1.83	7.52	13.1			9.63
2/11/2004	3	1.81	7.52	13.1			9.73
2/11/2004	5	1.85	7.53	13.03			9.8
2/11/2004	7	1.95	7.52	12.97			9.89
2/11/2004	9	1.75	7.53	13.02			10.11
2/11/2004	10	1.74	7.53	13.03			10.15
3/15/2004	1	7.7	8.03	12.79			11.71
3/15/2004	3	7.7	8.03	12.65			11.72
3/15/2004	5	7.68	8.02	12.6			11.73
3/15/2004	7	7.62	8.01	12.53			11.8
3/15/2004	9	7.36	7.96	12.45			12.15
3/15/2004	11	7.17	7.93	12.48			12.39
4/8/2004	1	9.34	7.83	11.54			12.48
4/8/2004	3	9.22	7.83	11.41			12.85
4/8/2004	5	9.12	7.83	11.38			12.97
4/8/2004	7	8.98	7.82	11.29			13.15
4/8/2004	9	8.77	7.81	11.23			13.29
4/8/2004	11	8.49	7.8	11.1			13.58
4/8/2004	12	8.36	7.8	11.28			14.01
5/6/2004	1	16.4	8.27	10.66			10.66
5/6/2004	3	16.56	8.25	10.81			10.83
5/6/2004	5	16.6	8.23	10.35			11.01
5/6/2004	7	15.81	7.95	8.64			12.81
5/6/2004	9	15.72	7.93	8.57			12.98
5/6/2004	11	15.66	7.91	8.45			13.06
6/3/2004	1	23.31	7.89	7.29			12.08
6/3/2004	3	23.34	7.94	6.93			12.09
6/3/2004	5	23.35	7.91	6.8			12.11
6/3/2004	7	23.39	7.81	5.9			12.41
6/3/2004	9	22.61	7.4	2.27			14.14
6/3/2004	11	22.18	7.31	1.62			14.77
6/3/2004	12	22.18	7.32	1.69			14.8
7/8/2004	1	26.99	8.29	8.02			13.26
7/8/2004	3	26.98	8.28	8.02			13.31
7/8/2004	5	26.61	7.92	4.85			14.22
7/8/2004	7	26.19	7.87	3.67			15.14
7/8/2004	9	25.7	7.69	2.29			15.75
7/8/2004	11	25.52	7.62	1.81			15.97
7/8/2004	13	25.36	7.59	1.48			16.23
7/8/2004	14	25.3	7.57	1.45			16.38
8/4/2004	1	27.39	8.22	7.75			13.21
8/4/2004	3	27.4	8.21	7.7			13.22
8/4/2004	5	27.43	8.17	7.41			13.44

VA0063029 - Mizpah Nursing Home, Inc. WWTP
Ambient Stream Data from Monitoring Station 3-RPP010.60 (Rappahannock River)
2013 Permit Reissuance

Collection Date	Depth (m)	Temp (˚C)	pH (SU)	DO Probe (mg/L)	DO Winkler (mg/L)	Fdt DO Optical (mg/L)	Salinity (g/kg)
8/4/2004	7	27.46	8.12	7.03			13.75
8/4/2004	9	27.1	7.84	4.42			15.42
8/4/2004	11	27.09	7.84	4.4			15.46
8/4/2004	12	27.05	7.82	4.18			15.61
9/14/2004	1	25.47	8.29	9.12			12.17
9/14/2004	3	25.71	8.05	7.67			12.86
9/14/2004	5	25.7	8.07	7.85			12.97
9/14/2004	7	25.63	7.76	5.7			14.23
9/14/2004	9	25.59	7.64	4.29			15.21
9/14/2004	11	25.55	7.5	3.24			15.96
9/14/2004	13	25.52	7.43	2.73			16.46
9/14/2004	14	25.51	7.41	2.63			16.61
10/14/2004	1	19.72	8.1	7.77			10.76
10/14/2004	3	19.78	8.09	7.75			10.76
10/14/2004	5	20.02	8.07	7.49			10.91
10/14/2004	7	20.09	8.07	7.37			11.04
10/14/2004	9	20.09	8.06	7.37			11.05
10/14/2004	11	20.1	8.06	7.5			11.07
11/22/2004	1	12.42	8.11	10.95			10.91
11/22/2004	3	12.35	8.09	10.74			11.28
11/22/2004	5	12.32	8.03	10.31			12.07
11/22/2004	7	12.13	7.94	9.87			12.82
11/22/2004	9	12.13	7.92	9.69			13.6
11/22/2004	11	12.18	7.9	9.52			13.9
12/21/2004	1	5.68	8.04	12.77			12.15
12/21/2004	3	5.72	8.04	13.29			12.14
12/21/2004	5	5.76	8.05	12.45			12.19
12/21/2004	7	5.95	8.07	12.47			12.3
12/21/2004	9	6.74	8.12	12.05			12.69
12/21/2004	11	6.88	8.12	12.27			12.84
12/21/2004	13	6.92	8.11	14.01			12.87
1/12/2005	1	6.93	8.36	13.93			11.17
1/12/2005	3	6.9	8.35	13.73			11.3
1/12/2005	5	6.85	8.32	13.49			11.38
1/12/2005	7	6.75	8.28	13.36			11.58
1/12/2005	9	6.7	8.26	13.22			11.62
1/12/2005	11	6.69	8.25	13.07			11.64
2/9/2005	1	3.34	7.99	14.44			10.31
2/9/2005	3	3.31	7.98	14.32			10.37
2/9/2005	5	3.06	7.95	14.2			10.51
2/9/2005	7	2.61	7.87	13.96			10.99
2/9/2005	9	2.15	7.79	13.76			11.65
2/9/2005	11	2.02	7.74	13.61			12.19
2/9/2005	13	1.92	7.71	13.55			12.48
2/9/2005	14	1.67	7.64	13.48			13.54
3/10/2005	1	4.27	7.91	12.75			10.69
3/10/2005	3	4.43	7.88	12.66			10.95
3/10/2005	5	4.4	7.9	12.71			11.29
3/10/2005	7	4.38	7.91	12.7			11.47

VA0063029 - Mizpah Nursing Home, Inc. WWTP
Ambient Stream Data from Monitoring Station 3-RPP010.60 (Rappahannock River)
2013 Permit Reissuance

Collection Date	Depth (m)	Temp (˚C)	pH (SU)	DO Probe (mg/L)	DO Winkler (mg/L)	Fdt DO Optical (mg/L)	Salinity (g/kg)
3/10/2005	9	4.48	7.89	12.64			11.8
3/10/2005	11	4.44	7.88	12.59			11.97
3/10/2005	13	4.4	7.87	12.62			12.19
3/10/2005	15	4.38	7.85	12.61			12.21
4/7/2005	1	11.8	8.17	12.15			8.96
4/7/2005	3	11.77	8.16	12.18			9.01
4/7/2005	5	11.75	8.16	12.25			9.22
4/7/2005	7	9.77	7.95	11.77			11.4
4/7/2005	9	8.93	7.78	11.5			13.06
4/7/2005	11	8.67	7.6	11.18			13.85
5/12/2005	1	17.35	8.28	10.09			11.04
5/12/2005	3	17.35	8.21	9.7			11.25
5/12/2005	5	16.87	8.19	9.55			11.26
5/12/2005	7	16.47	8.13	9.11			11.3
5/12/2005	9	15.68	8.03	8.65			11.35
5/12/2005	11	15.49	7.99	8.54			11.47
5/12/2005	12	15.32	7.92	8.24			11.64
6/9/2005	1	24.25	8.24	8.39			10.71
6/9/2005	3	23.93	8.17	8.07			10.82
6/9/2005	5	22.13	7.96	7.2			10.97
6/9/2005	7	20.65	7.61	5.65			11.45
6/9/2005	9	19.92	7.62	5.37			12.35
6/9/2005	11	19.42	7.67	5.24			13.34
6/9/2005	12	19.33	7.63	5.14			13.45
7/7/2005	1	27.33	8.22	6.95			13.44
7/7/2005	3	27.33	8.22	6.99			13.43
7/7/2005	5	27.26	8.1	6.1			13.55
7/7/2005	7	25.94	7.57	2.38			14.95
7/7/2005	9	24.85	7.43	1.29			16.29
7/7/2005	11	23.98	7.31	0.57			17.41
7/7/2005	12	23.92	7.32	0.64			17.47
8/9/2005	1	28.74	8.16	7.34			14.34
8/9/2005	3	28.76	8.14	7.06			14.37
8/9/2005	5	28.98	7.85	4.27			14.95
8/9/2005	7	29	7.78	3.6			15.04
8/9/2005	9	28.78	7.49	1.46			15.72
8/9/2005	11	28.54	7.42	0.89			16.35
9/12/2005	1	25.6	7.83	6.29			16.36
9/12/2005	3	25.59	7.82	6.27			16.38
9/12/2005	5	25.6	7.83	6.26			16.38
9/12/2005	7	25.61	7.83	6.29			16.38
9/12/2005	9	25.61	7.82	6.22			16.39
9/12/2005	11	25.59	7.8	6.17			16.43
10/4/2005	1	23.49	8.1	8.52			16.87
10/4/2005	3	23.52	8.1	8.55			16.91
10/4/2005	5	23.71	7.91	6.07			17.28
10/4/2005	7	24.03	7.6	4.09			17.89
10/4/2005	9	24.05	7.56	3.65			18.3
10/4/2005	11	24.02	7.55	3.61			18.51

VA0063029 - Mizpah Nursing Home, Inc. WWTP
Ambient Stream Data from Monitoring Station 3-RPP010.60 (Rappahannock River)
2013 Permit Reissuance

Collection Date	Depth (m)	Temp (˚C)	pH (SU)	DO Probe (mg/L)	DO Winkler (mg/L)	Fdt DO Optical (mg/L)	Salinity (g/kg)
11/1/2005	1	13.97	8.12	11.23			15.14
11/1/2005	3	14.58	8.05	10.47			15.84
11/1/2005	5	14.82	7.96	9.79			16.66
11/1/2005	7	14.82	7.89	9.4			17.2
11/1/2005	9	14.8	7.89	9.43			17.46
11/1/2005	11	14.77	7.89	9.37			17.59
11/1/2005	12	14.75	7.89	9.45			17.64
12/7/2005	1	7.99	8.13	9.61			15.98
12/7/2005	3	8.27	8.13	9.48			16.22
12/7/2005	5	8.31	8.13	9.42			16.28
12/7/2005	7	8.5	8.12	9.34			16.51
12/7/2005	9	8.93	8.13	9.24			16.97
12/7/2005	11	8.94	8.11	9.16			17.37
12/7/2005	12	8.96	8.11	9.2			17.38
1/4/2006	1	6.07	7.98	11.3			14.78
1/4/2006	3	6.06	7.98	11.21			14.98
1/4/2006	5	6.04	7.97	11.15			15.04
1/4/2006	7	6.02	7.97	11.24			15.06
1/4/2006	9	6.02	7.96	10.94			15.17
1/4/2006	11	6.01	7.96	10.96			15.26
1/4/2006	13	6	7.96	10.93			15.4
3/8/2006	1	5.2	8.2	14.2			11.71
3/8/2006	3	5.5	8.2	13.9			11.97
3/8/2006	5	5.6	8.2	13.9			12.34
3/8/2006	7	5.7	8.2	13.9			12.57
3/8/2006	9	5.5	8.1	13.3			12.94
3/8/2006	11	5.4	8.1	12.9			13.06
3/8/2006	12	5.3	8	12.7			13.16
4/10/2006	1	11.9	8.3	9.9			12.8
4/10/2006	3	12	8.3	9.9			12.9
4/10/2006	5	12.2	8.3	9.7			13
4/10/2006	7	12.2	8.2	9			13.5
4/10/2006	9	11.4	7.8	7.8			14.9
4/10/2006	11	11.2	7.7	7.7			15.2
5/23/2006	1	19.1	7.9	8.7			14.2
5/23/2006	3	19.1	7.9	8.6			14.3
5/23/2006	5	19.1	7.9	8.4			14.3
5/23/2006	7	19.2	7.8	7.7			15
5/23/2006	9	18.1	7.5	5			17.2
5/23/2006	11	17.9	7.4	4.7			17.5
6/19/2006	1	23.5	8	8.5			15.7
6/19/2006	5	23.5	8	8.3			15.7
6/19/2006	7	23.5	8	7.9			15.7
6/19/2006	9	22.9	7.7	6			15.8
6/19/2006	11	22.5	7.7	5.6			16
6/19/2006	12	22.5	7.7	5.6			16
7/12/2006	1	26.6	7.9	7.2			15.4
7/12/2006	3	26.6	7.9	6.8			15.4
7/12/2006	5	26.2	7.4	4.2			15.9

VA0063029 - Mizpah Nursing Home, Inc. WWTP
Ambient Stream Data from Monitoring Station 3-RPP010.60 (Rappahannock River)
2013 Permit Reissuance

Collection Date	Depth (m)	Temp (˚C)	pH (SU)	DO Probe (mg/L)	DO Winkler (mg/L)	Fdt DO Optical (mg/L)	Salinity (g/kg)
7/12/2006	7	26.2	7.4	3.7			15.9
7/12/2006	9	26.2	7.4	3.7			16
7/12/2006	11	26.2	7.4	3.7			16
8/9/2006	1	29.4	8	5.3			14.9
8/9/2006	3	29.4	8	5.3			14.9
8/9/2006	5	29.4	8	5.1			15
8/9/2006	7	29.6	7.9	3.7			15.3
8/9/2006	9	29.6	7.9	3.5			15.4
8/9/2006	11	29.1	7.6	1.6			15.9
9/13/2006	1	23.9	7.7	7.3			16.4
9/13/2006	3	23.9	7.7	7.1			16.4
9/13/2006	5	23.9	7.7	7.1			16.4
9/13/2006	7	23.9	7.7	7.5			16.3
9/13/2006	9	23.9	7.7	7.1			16.3
9/13/2006	11	23.8	7.8	7.9			16.5
9/13/2006	13	23.9	7.7	7.4			16.6
10/11/2006	1	20.2	7.9	8			15.6
10/11/2006	3	20.2	7.9	7.9			15.6
10/11/2006	5	20.2	7.9	7.7			15.6
10/11/2006	7	20.1	7.8	7.1			15.7
10/11/2006	9	20	7.8	6.7			16
10/11/2006	11	20	7.8	6.8			16.1
10/11/2006	12	20	7.7	6.7			16.1
11/14/2006	1	13.3	7.8	9.2			14.6
11/14/2006	3	13.3	7.8	9.3			14.6
11/14/2006	5	13.3	7.8	9.2			14.8
11/14/2006	7	13.5	7.8	9			15.2
11/14/2006	9	13.6	7.8	9.3			15.6
11/14/2006	11	13.7	7.8	9			16.1
12/11/2006	1	7.2	8.1	11.3			12.3
12/11/2006	3	7.9	8	10.6			12.9
12/11/2006	5	8	8	10.4			13.2
12/11/2006	7	8.5	7.9	9.5			14.2
12/11/2006	9	8.5	7.9	9.8			14.6
12/11/2006	10	8.5	7.9	9.8			14.7
1/18/2007	1	8.3	8.1	10.4			11.4
1/18/2007	3	8.7	8.1	10.2			12.6
1/18/2007	5	8.9	8.1	10.1			13
1/18/2007	7	9.1	8.1	9.8			13.6
1/18/2007	9	9.2	8	9.5			14.5
1/18/2007	10	9.2	8	9.5			14.7
2/26/2007	1	3.2	7.8	12.2			13
2/26/2007	3	3.2	7.8	12.2			13
2/26/2007	5	3.2	7.8	12.1			13.1
2/26/2007	7	3.2	7.8	12			13.7
2/26/2007	9	3.1	7.8	12.1			14.2
2/26/2007	10	3.1	7.8	12.1			14.2
4/25/2007	1	15.3	8.7	11.5			9.9
4/25/2007	2	15.2	8.6	11.2			9.9

VA0063029 - Mizpah Nursing Home, Inc. WWTP
Ambient Stream Data from Monitoring Station 3-RPP010.60 (Rappahannock River)
2013 Permit Reissuance

Collection Date	Depth (m)	Temp (˚C)	pH (SU)	DO Probe (mg/L)	DO Winkler (mg/L)	Fdt DO Optical (mg/L)	Salinity (g/kg)
4/25/2007	3	14.4	8.6	10.8			10
4/25/2007	4	13.9	8.5	9.6			10.1
4/25/2007	5	12.2	8	8.4			10.9
4/25/2007	6	11.6	7.8	8.3			11.2
4/25/2007	7	11.5	7.8	8.3			11.2
4/25/2007	8	11.3	7.8	8.5			11.5
4/25/2007	9	11.2	7.8	8.7			11.6
4/25/2007	10	11.2	7.8	9			11.6
5/9/2007	1	16	8.1	7.6			9.2
5/9/2007	2	16	8.1	7.6			9.5
5/9/2007	3	16.1	8.1	7.4			9.6
5/9/2007	4	16	8.1	7.4			9.7
5/9/2007	5	16	8	7.2			10.1
5/9/2007	6	15.9	8	7			10.3
5/9/2007	7	16	8	7			10.5
5/9/2007	8	15.9	8	6.6			10.6
5/9/2007	9	15.8	7.9	6.6			10.9
6/6/2007	1	22.8	7.9	7			12.5
6/6/2007	2	22.8	7.9	7			12.6
6/6/2007	3	22.8	8	7			12.6
6/6/2007	4	22.8	7.9	6.8			12.7
6/6/2007	5	22.7	7.9	6.7			12.9
6/6/2007	6	22.7	7.9	6.3			13
6/6/2007	7	22.5	7.8	5.3			14
6/6/2007	8	21.2	7.7	5			15.7
6/6/2007	9	20.9	7.7	4.9			16
6/6/2007	10	20.8	7.7	5.2			16.4
7/11/2007	1	27.9	8.1	6.8		7.3	15.2
7/11/2007	2	27.9	8.1	6.7		7.3	15.2
7/11/2007	3	27.9	8.1	6.5		7.2	15.2
7/11/2007	4	27.9	8.1	5.9		6.9	15.2
7/11/2007	5	26.1	7.5	2.9		3.6	16.1
7/11/2007	6	25.8	7.5	2.7		2.8	16.9
7/11/2007	7	25.3	7.4	2.6		2.5	17.5
7/11/2007	8	25.2	7.4	2.6		2.5	17.6
7/11/2007	9	25.2	7.4	2.7		2.5	17.6
7/11/2007	10	25.2	7.4	3.5		2.6	17.7
8/9/2007	1	29.7	8.1	6.7		7.5	16.7
8/9/2007	2	29.7	8.1	6.7		7.5	16.7
8/9/2007	3	29.7	8.1	6.6		7.3	16.7
8/9/2007	4	29.6	8	5.8		6.7	17
8/9/2007	5	28.7	7.8	4.3		4.8	17.8
8/9/2007	6	28.5	7.8	3.7		4.3	18
8/9/2007	7	27.4	7.6	2.6		2.9	19.2
8/9/2007	8	27.3	7.6	2.3		2.6	19.3
8/9/2007	9	27	7.5	1.9		2.2	19.7
8/9/2007	10	27	7.5	1.9		2.2	19.7
9/12/2007	1	27	7.7	5.1			18.2
9/12/2007	2	27	7.7	5.1			18.2

VA0063029 - Mizpah Nursing Home, Inc. WWTP
Ambient Stream Data from Monitoring Station 3-RPP010.60 (Rappahannock River)
2013 Permit Reissuance

Collection Date	Depth (m)	Temp (˚C)	pH (SU)	DO Probe (mg/L)	DO Winkler (mg/L)	Fdt DO Optical (mg/L)	Salinity (g/kg)
9/12/2007	3	27	7.7	5.1			18.2
9/12/2007	4	27	7.7	5			18.2
9/12/2007	5	27	7.7	4.9			18.2
9/12/2007	6	27	7.7	4.8			18.3
9/12/2007	7	27	7.7	4.1			18.3
9/12/2007	8	27	7.5	2.9			19.4
9/12/2007	9	26.9	7.6	3.2			20
9/12/2007	10	26.9	7.6	3			20.2
10/10/2007	1	24.9	7.9	7			18.9
10/10/2007	2	24.9	7.9	7			18.9
10/10/2007	3	24.9	7.9	6.7			18.9
10/10/2007	4	24.9	7.8	6.7			19
10/10/2007	5	24.9	7.8	6			19
10/10/2007	6	24.5	7.6	4.7			19.4
10/10/2007	7	24.2	7.5	4.1			19.9
10/10/2007	8	24.1	7.5	4.1			20
10/10/2007	9	24.1	7.5	4.1			20
12/11/2007	1	8.9	7.8	10.2			18.7
12/11/2007	2	8.8	7.8	9.9			18.7
12/11/2007	3	8.7	7.8	9.6			19
12/11/2007	4	8.5	7.8	9.4			19.5
12/11/2007	5	8.5	7.8	9.3			19.7
12/11/2007	6	8.5	7.8	9.3			19.8
12/11/2007	7	8.4	7.8	9.3			19.8
12/11/2007	8	8.4	7.7	9.3			19.9
12/11/2007	9	8.4	7.7	9.3			20
1/22/2008	1	4.7	7.7	11			18
1/22/2008	2	4.7	7.7	11			18
1/22/2008	3	4.8	7.7	11.1			18
1/22/2008	4	5	7.7	11			18.1
1/22/2008	5	5.1	7.7	11			18.2
1/22/2008	6	5.1	7.7	10.9			18.2
1/22/2008	7	5.1	7.7	10.9			18.2
1/22/2008	8	5.4	7.7	10.9			18.4
1/22/2008	9	5.4	7.7	11.1			18.4
2/12/2008	1	6.9	7.8				17.6
2/12/2008	2	6.9	7.8				17.6
2/12/2008	3	6.8	7.8				17.6
2/12/2008	4	6.9	7.8				17.6
2/12/2008	5	6.9	7.8				17.6
2/12/2008	6	6.9	7.8				17.7
2/12/2008	7	7	7.8				17.8
2/12/2008	8	7	7.8				17.8
3/11/2008	1	8.5	7.8	10.3			16.5
3/11/2008	2	8.5	7.8	10.3			16.5
3/11/2008	3	8.6	7.8	10.3			16.5
3/11/2008	4	8.6	7.8	10.3			16.5
3/11/2008	5	8.5	7.7	10.3			16.5
3/11/2008	6	8.6	7.8	10.3			16.5

VA0063029 - Mizpah Nursing Home, Inc. WWTP
Ambient Stream Data from Monitoring Station 3-RPP010.60 (Rappahannock River)
2013 Permit Reissuance

Collection Date	Depth (m)	Temp (˚C)	pH (SU)	DO Probe (mg/L)	DO Winkler (mg/L)	Fdt DO Optical (mg/L)	Salinity (g/kg)
3/11/2008	7	8.6	7.8	10.3			16.5
3/11/2008	8	8.6	7.8	10.3			16.5
3/11/2008	9	8.6	7.8	10.4			16.5
4/24/2008	1	16	7.8	8.3			13.4
4/24/2008	2	16	7.8	8.3			13.4
4/24/2008	3	16	7.8	8.3			13.4
4/24/2008	4	16	7.8	8.2			13.4
4/24/2008	5	16.1	7.7	8.2			13.4
4/24/2008	6	16.1	7.7	8.2			13.5
4/24/2008	7	16.1	7.7	8.2			13.5
4/24/2008	8	16.1	7.7	8.2			13.5
4/24/2008	9	16.1	7.7	8.2			13.5
5/14/2008	1	16.6	7.8	8.7			10.9
5/14/2008	2	16.8	7.8	8.6			11.1
5/14/2008	3	17	7.8	8.4			11.4
5/14/2008	4	17	7.8	8.2			11.7
5/14/2008	5	17.1	7.8	8.1			12
5/14/2008	6	17.1	7.8	8			12.1
5/14/2008	7	17	7.7	7.9			12.2
5/14/2008	8	17.4	7.7	7.5			12.5
5/14/2008	9	17.6	7.7	7.3			13
5/14/2008	10	17.6	7.7	7.3			13.1
6/10/2008	1	26.9	8.2	8.5			10.2
6/10/2008	2	26.6	8.1	7.7			10.6
6/10/2008	3	24.3	7.7	5.6			11.2
6/10/2008	4	23.8	7.6	5.3			11.5
6/10/2008	5	23	7.6	4.9			12
6/10/2008	6	22.9	7.6	4.9			12.1
6/10/2008	7	22.9	7.6	4.8			12.2
6/10/2008	8	22.8	7.6	4.8			12.3
6/10/2008	9	22.8	7.6	4.8			12.3
7/8/2008	1	26.4	8	7			13
7/8/2008	2	26.4	8	6.9			13.1
7/8/2008	3	26.4	7.8	6.3			13.1
7/8/2008	4	26.4	7.8	5.3			13.4
7/8/2008	5	26.2	7.6	3.8			13.7
7/8/2008	6	26	7.4	2.7			13.9
7/8/2008	7	25.9	7.4	2.2			14.4
7/8/2008	8	25.8	7.4	2.2			14.3
7/8/2008	9	25.8	7.4	2.1			14.5
8/12/2008	1	26.7	8.1	6.7			14.6
8/12/2008	2	26.7	8.1	6.6			14.6
8/12/2008	3	26.7	8	6.6			14.6
8/12/2008	4	26.7	8	6.5			14.6
8/12/2008	5	26.7	8	6.5			14.6
8/12/2008	6	26.7	8	6.4			14.6
8/12/2008	7	26.7	8	6.4			14.6
8/12/2008	8	26.8	8	5.8			14.7
8/12/2008	9	26.8	8	5.1			14.8

VA0063029 - Mizpah Nursing Home, Inc. WWTP
Ambient Stream Data from Monitoring Station 3-RPP010.60 (Rappahannock River)
2013 Permit Reissuance

Collection Date	Depth (m)	Temp (˚C)	pH (SU)	DO Probe (mg/L)	DO Winkler (mg/L)	Fdt DO Optical (mg/L)	Salinity (g/kg)
9/18/2008	1	24.1	7.9	6.9			15.4
9/18/2008	2	24.1	7.9	6.8			15.4
9/18/2008	3	24.1	7.9	6.8			15.4
9/18/2008	4	24.1	7.9	6.8			15.4
9/18/2008	5	24.2	7.9	6.3			15.4
9/18/2008	6	24.7	7.7	4.7			16.1
9/18/2008	7	25.1	7.5	4			17.3
9/18/2008	8	25.1	7.6	4.3			18.1
9/18/2008	9	25.1	7.7	4.6			18.4
10/15/2008	1	20.9	8	8.4			16.5
10/15/2008	2	20.9	8	8.4			16.5
10/15/2008	3	21	8	8.3			16.5
10/15/2008	4	21	8	8.1			16.6
10/15/2008	5	21	7.9	7.8			16.7
10/15/2008	6	20.9	7.9	7.2			16.8
10/15/2008	7	20.8	7.8	6.6			16.9
10/15/2008	8	20.7	7.7	6.1			17.4
10/15/2008	9	20.6	7.7	6.1			17.8
11/12/2008	1	13	7.8	9.1			17.9
11/12/2008	2	13.2	7.8	9.1			18
11/12/2008	3	13.2	7.8	9.2			18.1
11/12/2008	4	13.4	7.8	9.1			18.3
11/12/2008	5	13.4	7.8	8.9			18.4
11/12/2008	6	13.5	7.8	8.7			18.5
11/12/2008	7	13.8	7.7	8.3			19
11/12/2008	8	13.9	7.7	8.2			19.2
11/12/2008	9	14	7.7	8.3			19.3
12/3/2008	1	7.4	7.9	10.2			18.3
12/3/2008	2	7.5	7.9	10.2			18.3
12/3/2008	3	7.6	7.9	10.3			18.4
12/3/2008	4	7.6	7.9	10.2			18.4
12/3/2008	5	7.6	7.9	10.2			18.4
12/3/2008	6	7.6	7.9	10.2			18.4
12/3/2008	7	7.6	7.9	10.1			18.5
12/3/2008	8	8.2	7.8	10			19.5
12/3/2008	9	8.3	7.8	10			19.7
1/13/2009	1	5.4	7.5	11.4			17.3
1/13/2009	2	5.4	7.5	11.5			17.3
1/13/2009	3	5.5	7.5	11.5			17.3
1/13/2009	4	5.5	7.5	11.7			17.4
1/13/2009	5	5.5	7.5	11.7			17.5
1/13/2009	6	5.6	7.5	11.9			17.5
1/13/2009	7	5.6	7.5	12			17.6
1/13/2009	8	5.6	7.5	12.2			17.6
1/13/2009	9	5.6	7.5	12.2			17.6
2/10/2009	1	3.5	7.6	14.6			16.7
2/10/2009	2	3.5	7.6	14.2			16.7
2/10/2009	3	3.5	7.6	14.5			16.6
2/10/2009	4	3.5	7.6	14			16.7

VA0063029 - Mizpah Nursing Home, Inc. WWTP
Ambient Stream Data from Monitoring Station 3-RPP010.60 (Rappahannock River)
2013 Permit Reissuance

Collection Date	Depth (m)	Temp (˚C)	pH (SU)	DO Probe (mg/L)	DO Winkler (mg/L)	Fdt DO Optical (mg/L)	Salinity (g/kg)
2/10/2009	5	3.5	7.6	14.3			16.7
2/10/2009	6	3.4	7.6	13.8			16.7
2/10/2009	7	3.4	7.6	13.4			16.8
2/10/2009	8	3.3	7.6	13.7			16.8
2/10/2009	9	3.3	7.6	14.2			16.8
3/10/2009	1	6.4	7.5	11.4			16.5
3/10/2009	2	6.4	7.5	11.4			16.5
3/10/2009	3	6.4	7.4	11.3			16.5
3/10/2009	4	6.4	7.4	11.3			16.5
3/10/2009	5	6.4	7.5	11.3			16.5
3/10/2009	6	6.4	7.4	11.3			16.5
3/10/2009	7	6.3	7.4	11.3			16.6
3/10/2009	8	6.2	7.5	11.5			16.7
3/10/2009	9	6.2	7.4	11.2			16.7
4/27/2009	1	17.1	7.7	8.8			14.8
4/27/2009	2	17	7.6	8.6			14.6
4/27/2009	3	16.4	7.5	8.1			14.8
4/27/2009	4	15.6	7.4	8			14.9
4/27/2009	5	15.6	7.4	8			14.9
4/27/2009	6	15.5	7.4	7.9			15
4/27/2009	7	15.3	7.4	8			15.1
4/27/2009	8	15.2	7.4	8			15.2
4/27/2009	9	15.2	7.4	8.1			15.2
5/12/2009	1	19	7.7	8.2			13.3
5/12/2009	2	19	7.7	8.2			13.3
5/12/2009	3	19	7.7	8.2			13.3
5/12/2009	4	19.1	7.7	8.1			13.4
5/12/2009	5	19.1	7.7	8			13.7
5/12/2009	6	19.1	7.7	8			13.8
5/12/2009	7	19.1	7.7	8			13.8
5/12/2009	8	19.1	7.7	8			13.9
5/12/2009	9	19	7.5	6.6			15
6/10/2009	1	23.4	7.7	6.7			13.4
6/10/2009	2	23.5	7.7	6.9			13.4
6/10/2009	3	23.5	7.7	6.6			13.5
6/10/2009	4	23.5	7.7	6.7			13.6
6/10/2009	5	23.5	7.7	6.7			13.7
6/10/2009	6	23.5	7.7	6.6			13.8
6/10/2009	7	23.5	7.7	6.5			13.9
6/10/2009	8	23.4	7.7	5.9			13.9
6/10/2009	9	23	7.4	4.5			14.7
7/14/2009	1	26	7.9	6.8			14.1
7/14/2009	2	25.9	7.9	7.2			14
7/14/2009	3	25.9	7.9	6.8			14
7/14/2009	4	25.9	7.9	6.8			14
7/14/2009	5	26	7.9	6.5			14.1
7/14/2009	6	26	7.7	5.3			14.3
7/14/2009	7	25.8	7.5	3.7			14.7
7/14/2009	8	25.6	7.4	3.4			15.4

VA0063029 - Mizpah Nursing Home, Inc. WWTP
Ambient Stream Data from Monitoring Station 3-RPP010.60 (Rappahannock River)
2013 Permit Reissuance

Collection Date	Depth (m)	Temp (˚C)	pH (SU)	DO Probe (mg/L)	DO Winkler (mg/L)	Fdt DO Optical (mg/L)	Salinity (g/kg)
7/14/2009	9	25.5	7.5	3.5			15.6
7/14/2009	10	25.4	7.4	3.3			16.4
7/14/2009	11	25.4	7.4	3.2			16.5
7/14/2009	12	25.4	7.4	3.3			16.7
7/14/2009	13	25.4	7.4	3.2			16.7
8/11/2009	1	28.2	7.8	6.8			15.9
8/11/2009	2	28.2	7.8	6.7			15.9
8/11/2009	3	28.3	7.8	6.4			16.1
8/11/2009	4	28.1	7.8	5.7			16.4
8/11/2009	5	27.8	7.6	4.4			16.6
8/11/2009	6	27.7	7.4	3.2			16.8
8/11/2009	7	27.6	7.6	4.2			17.1
8/11/2009	8	27.5	7.6	4			17.3
8/11/2009	9	27.5	7.5	3.9			17.3
8/11/2009	10	27.5	7.5	3.9			17.3
8/11/2009	11	27.5	7.5	3.8			17.3
8/11/2009	12	27.5	7.5	3.8			17.3
8/11/2009	13	27.5	7.5	4			17.4
9/28/2009	1	22.8	7.8	6.1			16.3
9/28/2009	2	22.8	7.8	6.2			16.3
9/28/2009	3	22.8	7.8	6.1			16.3
9/28/2009	4	22.8	7.8	6.2			16.3
9/28/2009	5	22.8	7.8	6.1			16.3
9/28/2009	6	22.8	7.8	6.4			16.5
9/28/2009	7	22.8	7.8	6.6			16.5
9/28/2009	8	22.8	7.8	6.1			16.6
9/28/2009	9	22.8	7.8	6			16.6
10/22/2009	1	15.3	7.8	8.1			16.7
10/22/2009	2	15.4	7.8	8.2			16.8
10/22/2009	3	15.4	7.8	8			16.8
10/22/2009	4	15.4	7.8	7.9			16.8
10/22/2009	5	15.8	7.8	7.6			17.1
10/22/2009	6	15.8	7.8	7.6			17.1
10/22/2009	7	15.8	7.8	7.7			17.2
10/22/2009	8	15.7	7.8	7.5			17.3
10/22/2009	9	15.7	7.8	8.2			17.5
11/5/2009	1	15.4	8.1	8.8			16.7
11/5/2009	2	15.4	8.1	8.8			16.7
11/5/2009	3	15.4	8	8.8			16.7
11/5/2009	4	15.4	8	8.8			16.7
11/5/2009	5	15.4	8	8.8			16.7
11/5/2009	6	15.4	8	8.7			16.7
11/5/2009	7	15.5	8	8.7			16.8
11/5/2009	8	15.5	8	8.6			16.8
11/5/2009	9	15.5	8	8.6			16.8
1/19/2010	1	3	8.4				12.8
1/19/2010	3	2.7	8.3				13.3
1/19/2010	5	2.7	8.3				13.5
1/19/2010	7	2.2	8.2				14

VA0063029 - Mizpah Nursing Home, Inc. WWTP
Ambient Stream Data from Monitoring Station 3-RPP010.60 (Rappahannock River)
2013 Permit Reissuance

Collection Date	Depth (m)	Temp (˚C)	pH (SU)	DO Probe (mg/L)	DO Winkler (mg/L)	Fdt DO Optical (mg/L)	Salinity (g/kg)
1/19/2010	9	2.2	8.2				14
1/19/2010	11	2.2	8.2				14
1/19/2010	13	2.2	8.2				14.1
1/19/2010	15	2.1	8.2				14.1
1/19/2010	17	2.1	8.2				14.2
1/19/2010	19	2.1	8.2				14.3
1/19/2010	21	2.1	8.2				14.3
3/9/2010	1	7.4	8.1				9.9
3/9/2010	3	5.6	8.1				11.2
3/9/2010	5	4.8	8				12.6
3/9/2010	7	4.6	8				12.8
3/9/2010	9	4.4	7.9				13.1
3/9/2010	11	4.2	7.9				13.3
3/9/2010	13	4.2	7.9				13.5
3/9/2010	15	4.1	7.9				13.6
3/9/2010	17	4.1	7.9				13.6
3/9/2010	19	4.1	7.8				13.7
3/9/2010	21	4	7.8				13.8
4/13/2010	1	15.6	8.1	10.8			9.6
4/13/2010	2	15.6	8.1	10.7			9.6
4/13/2010	3	15.5	8	10.5			9.7
4/13/2010	4	15	8	10.2			10.3
4/13/2010	5	14.6	7.9	9.7			10.6
4/13/2010	6	13.9	7.7	8.9			11.5
4/13/2010	7	12.6	7.6	8.5			12.5
4/13/2010	8	12.4	7.6	8.4			12.7
4/13/2010	9	12.3	7.6	8.5			12.8
4/13/2010	10	12.2	7.6	8.6			12.8
4/13/2010	11	12.3	7.6	8.6			13
5/11/2010	1	18.3	8	9.4			11.2
5/11/2010	2	18.3	8.1	9.5			11.2
5/11/2010	3	18.3	8.1	9.4			11.3
5/11/2010	4	18.3	8.1	9.2			11.3
5/11/2010	5	18.3	8	8.9			11.9
5/11/2010	6	18.4	7.9	8.4			12.1
5/11/2010	7	18.4	7.9	8.4			12.1
5/11/2010	8	18.5	7.9	8.1			12
5/11/2010	9	18.5	7.8	7.8			12.4
5/11/2010	10	18.6	7.8	7.8			12.4
6/8/2010	1	25	8.1	7.7			11.6
6/8/2010	2	25	8.1	7.8			11.5
6/8/2010	3	24.9	8.1	7.6			11.6
6/8/2010	4	24.8	8	7.3			11.6
6/8/2010	5	24.6	7.9	6.8			11.6
6/8/2010	6	24.1	7.5	3.5			13.9
6/8/2010	7	23.1	7.4	3.1			14
6/8/2010	8	23	7.4	2.6			14.9
6/8/2010	9	22.7	7.4	2.5			15
6/8/2010	10	22.5	7.3	2.3			15

VA0063029 - Mizpah Nursing Home, Inc. WWTP
Ambient Stream Data from Monitoring Station 3-RPP010.60 (Rappahannock River)
2013 Permit Reissuance

Collection Date	Depth (m)	Temp (˚C)	pH (SU)	DO Probe (mg/L)	DO Winkler (mg/L)	Fdt DO Optical (mg/L)	Salinity (g/kg)
6/8/2010	11	22.3	7.3	2.6			15.3
7/13/2010	1	28.1	8.1				14
7/13/2010	3	27.9	7.9				14.1
7/13/2010	5	27.8	7.8				14.1
7/13/2010	7	27.8	7.7				14.2
7/13/2010	9	27.8	7.7				14.3
7/13/2010	11	27.8	7.7				14.3
7/13/2010	13	27.7	7.6				14.3
7/13/2010	15	27.7	7.6				14.4
7/13/2010	21	27.7	7.6				14.4
8/10/2010	1	28.7	8.1	7.5			16.4
8/10/2010	3	28.5	8	6.2			16.6
8/10/2010	5	28.4	8	5.5			16.6
8/10/2010	7	28.2	7.9	4.7			16.7
8/10/2010	9	28.1	7.7	3.4			16.9
8/10/2010	11	27.9	7.7	2.4			17.3
8/10/2010	13	27.8	7.6	1.9			17.4
8/10/2010	15	27.7	7.6	1.6			17.5
8/10/2010	17	27.6	7.5	1.2			17.6
8/10/2010	19	27.5	7.5	1			17.7
8/10/2010	20	27.5	7.5	1			17.7
9/16/2010	1	24.9	8.2	8			18.3
9/16/2010	3	24.7	8.1	6.9			18.5
9/16/2010	5	24.6	8	6.4			18.6
9/16/2010	7	24.7	7.9	5.4			18.7
9/16/2010	9	24.5	7.8	4.6			19.2
9/16/2010	11	24.5	7.8	4.6			19.4
9/16/2010	13	24.3	7.8	4.5			19.6
9/16/2010	15	24.3	7.8	4.5			19.7
9/16/2010	17	24.3	7.8	4.5			19.7
10/13/2010	1	20.4	8.2			10	17.4
10/13/2010	2	20.4	8.2			9.8	17.5
10/13/2010	4	20.2	8.1			9	17.6
10/13/2010	6	20	7.8			7.6	18.4
10/13/2010	8	20	7.9			7.5	18.8
10/13/2010	10	20	7.9			7.6	18.9
10/13/2010	12	20	7.9			7.5	18.9
10/13/2010	14	20	7.9			7.5	19
10/13/2010	16	20.1	7.9			7.5	19.2
10/13/2010	18	20.1	7.9			7.5	19.2
10/13/2010	20	20.1	7.9			7.4	19.3
11/9/2010	1	13.6	8	8.9			18
11/9/2010	2	13.6	8	8.9			18.1
11/9/2010	3	13.6	8	8.9			18.1
11/9/2010	4	13.6	8	8.9			18.1
11/9/2010	5	13.6	8	8.9			18.1
11/9/2010	6	13.6	8	8.9			18.1
11/9/2010	7	13.6	8	8.8			18.1
11/9/2010	8	13.6	8	8.8			18.2

VA0063029 - Mizpah Nursing Home, Inc. WWTP
Ambient Stream Data from Monitoring Station 3-RPP010.60 (Rappahannock River)
2013 Permit Reissuance

Collection Date	Depth (m)	Temp (˚C)	pH (SU)	DO Probe (mg/L)	DO Winkler (mg/L)	Fdt DO Optical (mg/L)	Salinity (g/kg)
11/9/2010	9	13.6	8	8.8			18.2
11/9/2010	10	13.6	8	8.8			18.2
11/9/2010	11	13.6	8	8.8			18.2
11/9/2010	12	13.7	8	8.7			18.2
11/9/2010	13	13.7	8	8.7			18.3
11/9/2010	14	13.7	8	8.7			18.3
11/9/2010	15	13.7	7.9	8.7			18.3
11/9/2010	16	13.7	7.9	8.7			18.3
11/9/2010	17	13.7	7.9	8.7			18.4
11/9/2010	18	13.8	7.9	8.7			18.5
11/9/2010	19	13.8	7.9	8.8			18.5
11/9/2010	20	13.8	7.9	8.8			18.5
12/2/2010	1	11.7	7.5				18.4
12/2/2010	2	11.6	7.5				18.4
12/2/2010	3	11.6	7.5				18.4
12/2/2010	4	11.6	7.5				18.4
12/2/2010	5	11.6	7.5				18.4
12/2/2010	6	11.6	7.5				18.5
12/2/2010	7	11.6	7.5				18.5
12/2/2010	8	11.7	7.5				18.5
12/2/2010	9	11.7	7.4				18.5
12/2/2010	10	11.7	7.4				18.5
12/2/2010	13	11.7	7.4				18.6
2/9/2011	1	3.5	7.5	11.9			15.8
2/9/2011	2	3.4	7.5	12			15.9
2/9/2011	3	3.5	7.5	12			16
2/9/2011	4	3.4	7.5	11.9			16.3
2/9/2011	5	3.3	7.4	11.9			16.3
2/9/2011	6	3.3	7.4	11.8			16.4
2/9/2011	7	3.3	7.4	11.8			16.4
2/9/2011	8	3.3	7.4	11.8			16.4
2/9/2011	9	3.3	7.4	11.8			16.5
2/9/2011	10	3.3	7.4	11.8			16.7
2/9/2011	11	3.3	7.3	11.8			16.8
2/9/2011	12	3.2	7.3	11.8			17
2/9/2011	13	3.2	7.3	11.8			17.3
2/9/2011	14	3.1	7.2	11.8			17.5
2/9/2011	15	3	7.2	11.7			17.7
2/9/2011	16	2.9	7.1	11.6			17.9
2/9/2011	17	2.9	7	11.6			18
2/9/2011	18	2.9	7	11.6			18
2/9/2011	19	2.9	6.9	11.6			18.1
3/8/2011	1	8.2	7.6	11.3			16
3/8/2011	2	8.1	7.6	11.4			16.1
3/8/2011	3	8	7.6	11.4			16.2
3/8/2011	4	8	7.6	11.2			16.2
3/8/2011	5	8	7.6	11.3			16.3
3/8/2011	6	8	7.5	11.2			16.5
3/8/2011	7	8	7.5	11.2			16.5

VA0063029 - Mizpah Nursing Home, Inc. WWTP
Ambient Stream Data from Monitoring Station 3-RPP010.60 (Rappahannock River)
2013 Permit Reissuance

Collection Date	Depth (m)	Temp (˚C)	pH (SU)	DO Probe (mg/L)	DO Winkler (mg/L)	Fdt DO Optical (mg/L)	Salinity (g/kg)
3/8/2011	8	7.9	7.5	11.1			16.8
3/8/2011	9	7.8	7.5	11.1			17
3/8/2011	10	7.8	7.4	11.1			17
3/8/2011	11	7.8	7.4	11.1			17.1
3/8/2011	12	7.8	7.3	11.1			17.1
3/8/2011	13	7.8	7.3	11.1			17.1
3/8/2011	14	7.7	7.2	11.1			17.2
3/8/2011	15	7.6	7.1	11.1			17.3
3/8/2011	16	7.6	6.9	11.2			17.3
4/26/2011	1	18.9	8.3	10.1			10.4
4/26/2011	2	18.7	8.3	10			10.4
4/26/2011	3	18.5	8.2	9.9			10.5
4/26/2011	4	18.1	8.1	9.6			10.7
4/26/2011	5	16.9	8	9.5			11.6
4/26/2011	6	16.3	8	9.4			11.8
4/26/2011	7	15.9	8	9.2			12
4/26/2011	8	15.5	8	9.2			12.3
4/26/2011	9	15.4	8	9.1			12.3
4/26/2011	10	15.4	8	9			12.3
4/26/2011	11	15.4	7.9	8.8			12.3
4/26/2011	12	15.3	7.9	8.5			12.4
4/26/2011	13	15.2	7.9	8.7			12.5
4/26/2011	14	15.1	7.9	8.8			12.5
4/26/2011	15	15	7.9	8.9			12.6
5/10/2011	1	19.3	8.2	9.8			10.3
5/10/2011	2	19.1	8.2	9.8			10.3
5/10/2011	3	19.1	8.2	9.7			10.5
5/10/2011	4	18.9	8.2	9.5			10.6
5/10/2011	5	18.9	8.2	9.5			10.6
5/10/2011	6	18.8	8.2	9.4			10.7
5/10/2011	7	18.6	8.1	9.1			10.8
5/10/2011	8	18.3	7.9	7.2			11.2
5/10/2011	9	17.9	7.8	6.9			11.6
5/10/2011	10	17.9	7.8	7			11.6
5/10/2011	11	17.7	7.8	6.8			11.7
6/14/2011	1	26.2	8	6.6			10
6/14/2011	2	26.2	8	6.3			10
6/14/2011	3	26.1	8	6.2			10
6/14/2011	4	26.1	8	5.8			10
6/14/2011	5	26.1	7.9	5.7			10.2
6/14/2011	6	26	7.8	4			11.4
6/14/2011	7	26	7.7	3.9			11.5
6/14/2011	8	25.4	7.7	3.1			11.3
6/14/2011	9	24.7	7.5	2.1			12.5
6/14/2011	10	24.8	7.5	2			13
6/14/2011	11	24.8	7.5	2.1			13.4
6/14/2011	12	24.8	7.5	2.2			13.5
6/14/2011	13	24.8	7.4	2.1			13.5
6/14/2011	14	24.8	7.5	2.2			12.3

VA0063029 - Mizpah Nursing Home, Inc. WWTP
Ambient Stream Data from Monitoring Station 3-RPP010.60 (Rappahannock River)
2013 Permit Reissuance

Collection Date	Depth (m)	Temp (˚C)	pH (SU)	DO Probe (mg/L)	DO Winkler (mg/L)	Fdt DO Optical (mg/L)	Salinity (g/kg)
6/14/2011	15	24.8	7.5	2.2			12.3
7/12/2011	1	28.7	8.4	8			11.9
7/12/2011	2	28.6	8.3	7.8			11.9
7/12/2011	3	28.5	8.3	7.6			12
7/12/2011	4	28.3	8.1	7.1			12
7/12/2011	5	27.8	7.7	4.2			12.8
7/12/2011	6	26.5	7.3	1			14.5
7/12/2011	7	26.4	7.3	1.3			14.8
7/12/2011	8	26.1	7.3	2.5			15.3
7/12/2011	9	25.8	7.3	0.4			15.9
7/12/2011	10	25.7	7.3	0.4			16.1
7/12/2011	11	25.6	7.3	0.5			16.3
8/9/2011	1	29.6	8.1	6.5			14.4
8/9/2011	2	29.5	8.1	6.5			14.5
8/9/2011	3	29.1	8.1	5.9			14.8
8/9/2011	4	29.1	8	5.1			15
8/9/2011	5	29	7.9	4.4			15.1
8/9/2011	6	28.9	7.9	4.4			15.4
8/9/2011	7	28.6	7.8	3.4			16.3
8/9/2011	8	28.1	7.7	2.8			16.9
8/9/2011	9	27.9	7.7	2.6			17.2
8/9/2011	10	27.9	7.7	2.4			17.3
8/9/2011	11	27.6	7.6	2.2			18
8/9/2011	12	27.4	7.6	1.9			18.7
9/13/2011	1	26.6	8.3	7.8			9.4
9/13/2011	2	26.9	8.1	6.9			12.4
9/13/2011	3	26.8	7.9	5.9			13.5
9/13/2011	4	26.6	7.8	4.9			14.3
9/13/2011	5	26.5	7.7	4.4			15.1
9/13/2011	6	26.5	7.7	4.2			15.4
9/13/2011	7	26.1	7.4	2.8			16.2
9/13/2011	8	26.1	7.4	2.8			16.2
9/13/2011	9	26.1	7.4	2.6			16.3
9/13/2011	10	26.1	7.4	2.6			16.4
9/13/2011	11	26	7.4	2.5			16.4
9/13/2011	12	26	7.4	2.3			16.4
9/13/2011	13	26	7.3	2.2			16.5
9/13/2011	14	26	7.3	2.1			16.6
10/25/2011	1	17.8	8.1	9			11.8
10/25/2011	2	17.8	8.1	8.9			11.9
10/25/2011	3	17.8	8	8.8			11.9
10/25/2011	4	17.8	8	8.6			12
10/25/2011	5	17.8	8	8.4			12.1
10/25/2011	6	17.9	7.8	7.4			13.1
10/25/2011	7	18.2	7.8	6.9			13.2
10/25/2011	8	18.4	7.7	6.7			13.7
10/25/2011	9	18.5	7.7	6.5			13.8
10/25/2011	10	18.8	7.7	6.4			13.9
10/25/2011	11	18.8	7.7	6.3			13.9

VA0063029 - Mizpah Nursing Home, Inc. WWTP
Ambient Stream Data from Monitoring Station 3-RPP010.60 (Rappahannock River)
2013 Permit Reissuance

Collection Date	Depth (m)	Temp (˚C)	pH (SU)	DO Probe (mg/L)	DO Winkler (mg/L)	Fdt DO Optical (mg/L)	Salinity (g/kg)
10/25/2011	12	18.6	7.7	6.3			14
10/25/2011	13	18.6	7.7	6.3			14
11/8/2011	1	14.2	8.1	10.8			11.1
11/8/2011	2	14.1	8.1	10.5			11.2
11/8/2011	3	14	8	9.7			11.5
11/8/2011	4	14.1	7.9	9.5			11.7
11/8/2011	5	14.1	7.9	9.3			11.7
11/8/2011	6	14.1	7.9	9.2			11.8
11/8/2011	7	14.1	7.9	9.2			12
11/8/2011	8	14.1	7.9	9.2			12.1
11/8/2011	9	14.1	7.9	9.2			12.2
11/8/2011	10	14.1	7.9	9.1			12.3
11/8/2011	11	14.2	7.9	9.2			12.3
11/8/2011	12	14.1	7.9	9.2			12.3
11/8/2011	13	14.1	7.9	9.1			12.3
11/8/2011	14	14.1	7.9	9.2			12.3
12/13/2011	1	10.14	7.84	10.58			10
12/13/2011	2	10.28	7.81	10.46			10.5
12/13/2011	3	10.31	7.77	10.35			10.6
12/13/2011	4	10.42	7.76	10.29			10.6
12/13/2011	5	10.53	7.73	10.1			10.9
12/13/2011	6	10.69	7.67	9.94			11
12/13/2011	7	10.9	7.57	9.56			11.7
12/13/2011	8	10.82	7.51	9.51			11.7
12/13/2011	9	10.79	7.42	9.51			11.7
12/13/2011	10	10.9	6.99	9.5			11.7
1/10/2012	1	7.39	8.03	12.35			10.2
1/10/2012	2	7.31	8.03	12.27			10.2
1/10/2012	3	7.28	8.03	12.14			10.2
1/10/2012	4	7.24	8.03	12.04			10.3
1/10/2012	5	7.21	8.02	12			10.3
1/10/2012	6	7.17	8	11.9			10.4
1/10/2012	7	7.18	7.98	11.74			10.6
1/10/2012	8	7.19	7.97	11.51			10.6
1/10/2012	9	7.26	7.91	11.05			11.1
1/10/2012	10	7.35	7.83	10.68			11.6
1/10/2012	11	7.37	7.81	10.53			11.7
1/10/2012	12	7.37	7.79	10.45			11.8
1/10/2012	13	7.4	7.78	10.42			12
2/14/2012	1	6.04	6.98	12.77			9.6
2/14/2012	2	5.98	6.42	12.66			9.8
2/14/2012	3	6.08	6.41	12.39			10
2/14/2012	4	6.15	6.41	12.16			10.2
2/14/2012	5	6.21	6.4	12.06			10.2
2/14/2012	6	6.32	6.4	12			10.3
2/14/2012	7	6.35	6.4	11.94			10.5
2/14/2012	8	6.36	6.39	11.88			10.6
2/14/2012	9	6.35	6.38	11.93			10.6
2/14/2012	10	6.35	6.38	11.91			10.6

VA0063029 - Mizpah Nursing Home, Inc. WWTP
Ambient Stream Data from Monitoring Station 3-RPP010.60 (Rappahannock River)
2013 Permit Reissuance

Collection Date	Depth (m)	Temp (˚C)	pH (SU)	DO Probe (mg/L)	DO Winkler (mg/L)	Fdt DO Optical (mg/L)	Salinity (g/kg)
2/14/2012	11	6.36	6.37	11.94			10.7
2/14/2012	12	6.36	6.36	11.88			10.8
2/14/2012	13	6.37	6.34	11.77			11
3/13/2012	1	10.75	8.35	11.74			10.9
3/13/2012	2	10.56	8.35	11.89			10.9
3/13/2012	3	10.33	8.34	11.71			10.9
3/13/2012	4	10.26	8.32	11.51			10.9
3/13/2012	5	10.24	8.3	11.37			10.9
3/13/2012	6	10.04	8.28	11.3			11.1
3/13/2012	7	9.58	8.25	10.92			11.4
3/13/2012	8	9.41	8.27	11.07			11.6
3/13/2012	9	9.25	8.28	11.02			11.9
3/13/2012	10	9.18	8.27	11.02			12.1
3/13/2012	11	9.14	8.27	11.05			12.2
3/13/2012	12	9.9	8.27	11.07			12.3
3/13/2012	13	9.04	8.27	11.11			12.3
3/13/2012	14	9.06	8.27	11.13			12.3
4/10/2012	1	14.96	7.94	8.43			12
4/10/2012	2	14.96	7.95	8.51			12
4/10/2012	3	14.95	7.95	8.52			12
4/10/2012	4	14.93	7.95	8.43			12
4/10/2012	5	14.87	7.95	8.33			12
4/10/2012	6	14.82	7.95	8.24			12.1
4/10/2012	7	14.71	7.96	8.2			12.2
4/10/2012	8	14.68	7.98	8.14			12.4
4/10/2012	9	14.51	8	8.1			12.8
4/10/2012	10	14.45	8	8.12			13
4/10/2012	11	14.34	8.02	8.15			13.2
4/10/2012	12	14.31	8.04	8.15			13.3
4/10/2012	13	14.29	8.04	8.14			13.3
4/10/2012	14	14.22	8.05	8.14			13.3
4/10/2012	15	14.23	8.05	8.14			13.5
4/10/2012	16	14.22	8.05	8.19			13.5
4/10/2012	17	14.22	8.05	8.19			13.5
5/22/2012	1	21.26	8.06	8.28			13.9
5/22/2012	2	21.15	8.03	8.05			13.9
5/22/2012	3	21.09	7.83	7.85			14.1
5/22/2012	5	20.88	7.81	6.76			14.4
5/22/2012	6	20.69	7.69	5.85			14.6
5/22/2012	7	20.45	7.65	6.19			14.7
5/22/2012	8	20.36	7.61	5.44			14.9
5/22/2012	9	20.28	7.58	5.14			15
5/22/2012	10	20.28	7.58	5.02			15
5/22/2012	11	19.91	7.46	3.99			15.4
5/22/2012	12	19.85	7.43	3.8			15.4
5/22/2012	13	19.85	7.42	3.78			15.4
7/17/2012	1	29.06	8.22	7.69			15.07
7/17/2012	2	28.79	8.21	7.51			15.2
7/17/2012	3	28.67	8.2	7.48			15.29

VA0063029 - Mizpah Nursing Home, Inc. WWTP
Ambient Stream Data from Monitoring Station 3-RPP010.60 (Rappahannock River)
2013 Permit Reissuance

Collection Date	Depth (m)	Temp (˚C)	pH (SU)	DO Probe (mg/L)	DO Winkler (mg/L)	Fdt DO Optical (mg/L)	Salinity (g/kg)
7/17/2012	4	28.5	8.11	6.55			15.66
7/17/2012	5	28.06	7.9	4.85			16.69
7/17/2012	6	27.81	7.81	4.09			17.49
7/17/2012	7	27.7	7.84	4.32			18.39
7/17/2012	8	27.6	7.83	4.17			18.55
7/17/2012	9	27.51	7.8	3.88			18.87
7/17/2012	10	27.45	7.78	3.76			19.11
7/17/2012	11	27.39	7.76	3.65			19.37
8/14/2012	1	28.82	8.31	8.15			18.25
8/14/2012	2	28.47	8.29	7.88			18.28
8/14/2012	3	28.28	8.22	6.94			18.28
8/14/2012	4	28.27	8.17	6.41			18.33
8/14/2012	5	28.2	8.02	4.83			18.42
8/14/2012	6	28.29	7.71	2.75			19.01
8/14/2012	7	28.29	7.52	1.33			19.32
8/14/2012	8	28.29	7.49	1.37			19.4
8/14/2012	9	28.29	7.48	0.45			19.61
8/14/2012	10	28.29	7.49	0.42			19.81
8/14/2012	11	28.24	7.48	0.41			19.81
8/14/2012	12	28.21	7.49	0.48			19.86
9/11/2012	1	25.55	8.04	6.92			17.86
9/11/2012	2	25.47	8.03	6.7			17.84
9/11/2012	3	25.6	8.01	6.47			18.02
9/11/2012	4	25.61	7.98	6.1			18.23
9/11/2012	5	25.72	7.95	5.86			18.38
9/11/2012	6	25.7	7.94	5.73			18.45
9/11/2012	7	25.7	7.94	5.58			18.54
9/11/2012	8	25.8	7.92	5.27			18.8
9/11/2012	9	25.97	7.86	4.78			19.17
9/11/2012	10	26.02	7.87	4.7			19.33
9/11/2012	11	26.1	7.87	4.65			19.39
9/11/2012	12	26.14	7.85	4.48			19.54
10/25/2012	1	18.61	8.08	9.42			19.46
10/25/2012	2	18.47	8.07	9.42			19.47
10/25/2012	3	18.45	8.08	9.25			19.59
10/25/2012	4	18.43	8.04	8.74			19.73
10/25/2012	5	18.4	7.97	8.13			20.3
10/25/2012	6	18.4	7.92	7.77			20.6
10/25/2012	7	18.39	7.92	7.68			20.69
10/25/2012	8	18.38	7.91	7.6			20.78
10/25/2012	9	18.37	7.9	7.47			20.83
10/25/2012	10	18.35	7.87	7.28			20.89
10/25/2012	11	18.35	7.87	7.28			20.91
10/25/2012	12	18.34	7.88	7.36			21.05
10/25/2012	13	18.33	7.87	7.45			21.06
11/29/2012	1	9.23	8.22	10.44			18.74
11/29/2012	2	9.17	8.22	10.51			18.74
11/29/2012	3	9.15	8.22	10.47			18.78
11/29/2012	4	9.17	8.22	10.4			18.8

VA0063029 - Mizpah Nursing Home, Inc. WWTP
Ambient Stream Data from Monitoring Station 3-RPP010.60 (Rappahannock River)
2013 Permit Reissuance

Collection Date	Depth (m)	Temp (˚C)	pH (SU)	DO Probe (mg/L)	DO Winkler (mg/L)	Fdt DO Optical (mg/L)	Salinity (g/kg)
11/29/2012	5	9.21	8.22	10.49			18.82
11/29/2012	6	9.26	8.22	10.42			18.84
11/29/2012	7	9.27	8.21	10.3			18.88
11/29/2012	8	9.41	8.2	10.22			19.01
11/29/2012	9	9.37	8.2	10.14			19.15
11/29/2012	10	9.4	8.2	10.04			19.26
11/29/2012	11	9.44	8.18	9.98			19.31
11/29/2012	12	9.46	8.18	9.82			19.37
11/29/2012	13	9.5	8.17	9.77			19.48
11/29/2012	14	9.51	8.17	9.79			19.53
12/19/2012	1	9.74	8.12	10.14			18.19
12/19/2012	2	9.72	8.12	10.14			18.19
12/19/2012	3	9.75	8.12	10.13			18.17
12/19/2012	4	9.71	8.12	10.17			18.19
12/19/2012	5	9.68	8.12	10.19			18.2
12/19/2012	6	9.64	8.11	10.14			18.22
12/19/2012	7	9.63	8.11	10.12			18.22
12/19/2012	8	9.62	8.11	10.12			18.22
12/19/2012	9	9.62	8.11	10.13			18.28
12/19/2012	10	9.62	8.11	10.18			18.28
12/19/2012	11	9.62	8.11				18.28
90th Percentile		**27.0**	**8.2**				
10th Percentile		**5.6**	**7.4**				
Average							**16.0**

Attachment F

2013 and 2008 MSTRANTI and STATS Printouts

SALTWATER AND TRANSITION ZONES
WATER QUALITY CRITERIA / WASTELOAD ALLOCATION ANALYSIS

Facility Name: Mizpah Nursing Home, Inc. WWTP
Receiving Stream: Rappahannock River

Permit No.: VA0063029

Version: OWP Guidance Memo 00-2011 (8/24/00)

Stream Information

Mean Hardness (as CaCO3) =	N/A	mg/l
90th % Temperature (Annual) =	27	(^{o} C)
10th % Temperature (Annual) =	5.6	(^{o} C)
90th % Temperature (Winter) =	N/A	(^{o} C)
90th % Maximum pH =	8.2	
10th % Maximum pH =	7.4	
Tier Designation (1 or 2) =	1	
Early Life Stages Present Y/N =	Y	
Tidal Zone =	1	(1 = saltwater, 2 = transition zone)
Mean Salinity =	16	(g/kg)

Mixing Information

Design Flow (MGD)	0.02
Acute WLA multiplier	2
Chronic WLA multiplier	50
Human health WLA multiplier	50

Effluent Information

Mean Hardness (as CaCO3) =	N/A	mg/L
90 % Temperature (Annual) =	27	(^{o} C)
90 % Temperature (Winter) =	N/A	(^{o} C)
90 % Maximum pH =	8.67	SU
10 % Maximum pH =	8.11	SU
Heated Discharge? (Y/N)	N	
Discharge Flow =	0.02	MGD

Parameter	Background	Water Quality Criteria			Wasteload Allocations			Antidegradation Baseline			Antidegradation Allocations			**Most Limiting Allocations**		
(ug/l unless noted)	Conc.	Acute	Chronic	HH	Acute	Chronic	HH	Acute	Chronic	HH	Acute	Chronic	HH	**Acute**	**Chronic**	**HH**
Acenapthene	0	--	--	9.9E+02	--	--	5.0E+04	--	--	--	--	--	--	**--**	**--**	**5.0E+04**
Acrolein	0	--	--	9.3E+00	--	--	4.7E+02	--	--	--	--	--	--	**--**	**--**	**4.7E+02**
Acrylonitrile[C]	0	--	--	2.5E+00	--	--	1.3E+02	--	--	--	--	--	--	**--**	**--**	**1.3E+02**
Aldrin [C]	0	1.3E+00	--	5.0E-04	2.6E+00	--	2.5E-02	--	--	--	--	--	--	**2.6E+00**	**--**	**2.5E-02**
Ammonia-N (mg/l) - Annual	0	1.48E+00	3.29E-01	--	2.96E+00	1.64E+01	--	--	--	--	--	--	--	**2.96E+00**	**1.64E+01**	**--**
Ammonia-N (mg/l) - Winter	0	#VALUE!	#VALUE!	--	#VALUE!	#VALUE!	--	--	--	--	--	--	--	**#VALUE!**	**#VALUE!**	**--**
Anthracene	0	--	--	4.0E+04	--	--	2.0E+06	--	--	--	--	--	--	**--**	**--**	**2.0E+06**
Antimony	0	--	--	6.4E+02	--	--	3.2E+04	--	--	--	--	--	--	**--**	**--**	**3.2E+04**
Arsenic	0	6.9E+01	3.6E+01	--	1.4E+02	1.8E+03	--	--	--	--	--	--	--	**1.4E+02**	**1.8E+03**	**--**
Benzene [C]	0	--	--	5.1E+02	--	--	2.6E+04	--	--	--	--	--	--	**--**	**--**	**2.6E+04**
Benzidine[C]	0	--	--	2.0E-03	--	--	1.0E-01	--	--	--	--	--	--	**--**	**--**	**1.0E-01**
Benzo (a) anthracene [C]	0	--	--	1.8E-01	--	--	9.0E+00	--	--	--	--	--	--	**--**	**--**	**9.0E+00**
Benzo (b) fluoranthene [C]	0	--	--	1.8E-01	--	--	9.0E+00	--	--	--	--	--	--	**--**	**--**	**9.0E+00**
Benzo (k) fluoranthene [C]	0	--	--	1.8E-01	--	--	9.0E+00	--	--	--	--	--	--	**--**	**--**	**9.0E+00**
Benzo (a) pyrene [C]	0	--	--	1.8E-01	--	--	9.0E+00	--	--	--	--	--	--	**--**	**--**	**9.0E+00**
Bis2-Chloroethyl Ether[C]	0	--	--	5.3E+00	--	--	2.7E+02	--	--	--	--	--	--	**--**	**--**	**2.7E+02**
Bis2-Chloroisopropyl Ether	0	--	--	6.5E+04	--	--	3.3E+06	--	--	--	--	--	--	**--**	**--**	**3.3E+06**
Bis2-Ethylhexyl Phthalate[C]	0	--	--	2.2E+01	--	--	1.1E+03	--	--	--	--	--	--	**--**	**--**	**1.1E+03**
Bromoform [C]	0	--	--	1.4E+03	--	--	7.0E+04	--	--	--	--	--	--	**--**	**--**	**7.0E+04**
Butylbenzylphthalate	0	--	--	1.9E+03	--	--	9.5E+04	--	--	--	--	--	--	**--**	**--**	**9.5E+04**
Cadmium	0	4.0E+01	8.8E+00	--	8.0E+01	4.4E+02	--	--	--	--	--	--	--	**8.0E+01**	**4.4E+02**	**--**
Carbon Tetrachloride [C]	0	--	--	1.6E+01	--	--	8.0E+02	--	--	--	--	--	--	**--**	**--**	**8.0E+02**
Chlordane [C]	0	9.0E-02	4.0E-03	8.1E-03	1.8E-01	2.0E-01	4.1E-01	--	--	--	--	--	--	**1.8E-01**	**2.0E-01**	**4.1E-01**
TRC	0			--			--	--	--	--	--	--	--	**--**	**--**	**--**
Chlorine Prod. Oxidant	0	1.3E+01	7.5E+00	--	2.6E+01	3.8E+02	--	--	--	--	--	--	--	**2.6E+01**	**3.8E+02**	**--**
Chlorobenzene	0	--	--	1.6E+03	--	--	8.0E+04	--	--	--	--	--	--	**--**	**--**	**8.0E+04**
Chlorodibromomethane[C]	0	--	--	1.3E+02	--	--	6.5E+03	--	--	--	--	--	--	**--**	**--**	**6.5E+03**

Parameter	Background	Water Quality Criteria			Wasteload Allocations			Antidegradation Baseline			Antidegradation Allocations			**Most Limiting Allocations**		
(ug/l unless noted)	Conc.	Acute	Chronic	HH	Acute	Chronic	HH	Acute	Chronic	HH	Acute	Chronic	HH	**Acute**	**Chronic**	**HH**
Chloroform	0	--	--	1.1E+04	--	--	5.5E+05	--	--	--	--	--	--	**--**	**--**	**5.5E+05**
2-Chloronaphthalene	0	--	--	1.6E+03	--	--	8.0E+04	--	--	--	--	--	--	**--**	**--**	**8.0E+04**
2-Chlorophenol	0	--	--	1.5E+02	--	--	7.5E+03	--	--	--	--	--	--	**--**	**--**	**7.5E+03**
Chlorpyrifos	0	1.1E-02	5.6E-03	--	2.2E-02	2.8E-01	--	--	--	--	--	--	--	**2.2E-02**	**2.8E-01**	**--**
Chromium III	0			--			--	--	--	--	--	--	--	**--**	**--**	**--**
Chromium VI	0	1.1E+03	5.0E+01	--	2.2E+03	2.5E+03	--	--	--	--	--	--	--	**2.2E+03**	**2.5E+03**	**--**
Chrysene [C]	0	--	--	1.8E-02	--	--	9.0E-01	--	--	--	--	--	--	**--**	**--**	**9.0E-01**
Copper	0	9.3E+00	6.0E+00	--	1.9E+01	3.0E+02	--	--	--	--	--	--	--	**1.9E+01**	**3.0E+02**	**--**
Cyanide, Free	0	1.0E+00	1.0E+00	1.6E+04	2.0E+00	5.0E+01	8.0E+05	--	--	--	--	--	--	**2.0E+00**	**5.0E+01**	**8.0E+05**
DDD [C]	0	--	--	3.1E-03	--	--	1.6E-01	--	--	--	--	--	--	**--**	**--**	**1.6E-01**
DDE [C]	0	--	--	2.2E-03	--	--	1.1E-01	--	--	--	--	--	--	**--**	**--**	**1.1E-01**
DDT [C]	0	1.3E-01	1.0E-03	2.2E-03	2.6E-01	5.0E-02	1.1E-01	--	--	--	--	--	--	**2.6E-01**	**5.0E-02**	**1.1E-01**
Demeton	0	--	1.0E-01	--	--	5.0E+00	--	--	--	--	--	--	--	**--**	**5.0E+00**	**--**
Diazinon	0	8.2E-01	8.2E-01	--	1.6E+00	4.1E+01	--	--	--	--	--	--	--	**1.6E+00**	**4.1E+01**	**--**
Dibenz(a,h)anthracene [C]	0	--	--	1.8E-01	--	--	9.0E+00	--	--	--	--	--	--	**--**	**--**	**9.0E+00**
1,2-Dichlorobenzene	0	--	--	1.3E+03	--	--	6.5E+04	--	--	--	--	--	--	**--**	**--**	**6.5E+04**
1,3-Dichlorobenzene	0	--	--	9.6E+02	--	--	4.8E+04	--	--	--	--	--	--	**--**	**--**	**4.8E+04**
1,4-Dichlorobenzene	0	--	--	1.9E+02	--	--	9.5E+03	--	--	--	--	--	--	**--**	**--**	**9.5E+03**
3,3-Dichlorobenzidine[C]	0	--	--	2.8E-01	--	--	1.4E+01	--	--	--	--	--	--	**--**	**--**	**1.4E+01**
Dichlorobromomethane [C]	0	--	--	1.7E+02	--	--	8.5E+03	--	--	--	--	--	--	**--**	**--**	**8.5E+03**
1,2-Dichloroethane [C]	0	--	--	3.7E+02	--	--	1.9E+04	--	--	--	--	--	--	**--**	**--**	**1.9E+04**
1,1-Dichloroethylene	0	--	--	7.1E+03	--	--	3.6E+05	--	--	--	--	--	--	**--**	**--**	**3.6E+05**
1,2-trans-dichloroethylene	0	--	--	1.0E+04	--	--	5.0E+05	--	--	--	--	--	--	**--**	**--**	**5.0E+05**
2,4-Dichlorophenol	0	--	--	2.9E+02	--	--	1.5E+04	--	--	--	--	--	--	**--**	**--**	**1.5E+04**
1,2-Dichloropropane[C]	0	--	--	1.5E+02	--	--	7.5E+03	--	--	--	--	--	--	**--**	**--**	**7.5E+03**
1,3-Dichloropropene[C]	0	--	--	2.1E+02	--	--	1.1E+04	--	--	--	--	--	--	**--**	**--**	**1.1E+04**
Dieldrin [C]	0	7.1E-01	1.9E-03	5.4E-04	1.4E+00	9.5E-02	2.7E-02	--	--	--	--	--	--	**1.4E+00**	**9.5E-02**	**2.7E-02**
Diethyl Phthalate	0	--	--	4.4E+04	--	--	2.2E+06	--	--	--	--	--	--	**--**	**--**	**2.2E+06**
2,4-Dimethylphenol	0	--	--	8.5E+02	--	--	4.3E+04	--	--	--	--	--	--	**--**	**--**	**4.3E+04**
Dimethyl Phthalate	0	--	--	1.1E+06	--	--	5.5E+07	--	--	--	--	--	--	**--**	**--**	**5.5E+07**
Di-n-Butyl Phthalate	0	--	--	4.5E+03	--	--	2.3E+05	--	--	--	--	--	--	**--**	**--**	**2.3E+05**
2,4 Dinitrophenol	0	--	--	5.3E+03	--	--	2.7E+05	--	--	--	--	--	--	**--**	**--**	**2.7E+05**
2-Methyl-4,6-Dinitrophenol	0	--	--	2.8E+02	--	--	1.4E+04	--	--	--	--	--	--	**--**	**--**	**1.4E+04**
2,4-Dinitrotoluene [C]	0	--	--	3.4E+01	--	--	1.7E+03	--	--	--	--	--	--	**--**	**--**	**1.7E+03**
Dioxin 2,3,7,8-tetrachlorodibenzo-p-dioxin	0	--	--	5.1E-08	--	--	2.6E-06	--	--	--	--	--	--	**--**	**--**	**2.6E-06**
1,2-Diphenylhydrazine[C]	0	--	--	2.0E+00	--	--	1.0E+02	--	--	--	--	--	--	**--**	**--**	**1.0E+02**
Alpha-Endosulfan	0	3.4E-02	8.7E-03	8.9E+01	6.8E-02	4.4E-01	4.5E+03	--	--	--	--	--	--	**6.8E-02**	**4.4E-01**	**4.5E+03**
Beta-Endosulfan	0	3.4E-02	8.7E-03	8.9E+01	6.8E-02	4.4E-01	4.5E+03	--	--	--	--	--	--	**6.8E-02**	**4.4E-01**	**4.5E+03**
Alpha + Beta Endosulfan	0	3.4E-02	8.7E-03	--	6.8E-02	4.4E-01	--	--	--	--	--	--	--	**6.8E-02**	**4.4E-01**	**--**
Endosulfan Sulfate	0	--	--	8.9E+01	--	--	4.5E+03	--	--	--	--	--	--	**--**	**--**	**4.5E+03**
Endrin	0	3.7E-02	2.3E-03	6.0E-02	7.4E-02	1.2E-01	3.0E+00	--	--	--	--	--	--	**7.4E-02**	**1.2E-01**	**3.0E+00**
Endrin Aldehyde	0	--	--	3.0E-01	--	--	1.5E+01	--	--	--	--	--	--	**--**	**--**	**1.5E+01**
Ethylbenzene	0	--	--	2.1E+03	--	--	1.1E+05	--	--	--	--	--	--	**--**	**--**	**1.1E+05**
Fluoranthene	0	--	--	1.4E+02	--	--	7.0E+03	--	--	--	--	--	--	**--**	**--**	**7.0E+03**

Parameter	Background	Water Quality Criteria			Wasteload Allocations			Antidegradation Baseline			Antidegradation Allocations			**Most Limiting Allocations**		
(ug/l unless noted)	Conc.	Acute	Chronic	HH	Acute	Chronic	HH	Acute	Chronic	HH	Acute	Chronic	HH	**Acute**	**Chronic**	**HH**
Fluorene	0	--	--	5.3E+03	--	--	2.7E+05	--	--	--	--	--	--	**--**	**--**	**2.7E+05**
Guthion	0	--	1.0E-02	--	--	5.0E-01	--	--	--	--	--	--	--	**--**	**5.0E-01**	**--**
Heptachlor [C]	0	5.3E-02	3.6E-03	7.9E-04	1.1E-01	1.8E-01	4.0E-02	--	--	--	--	--	--	**1.1E-01**	**1.8E-01**	**4.0E-02**
Heptachlor Epoxide[C]	0	5.3E-02	3.6E-03	3.9E-04	1.1E-01	1.8E-01	2.0E-02	--	--	--	--	--	--	**1.1E-01**	**1.8E-01**	**2.0E-02**
Hexachlorobenzene[C]	0	--	--	2.9E-03	--	--	1.5E-01	--	--	--	--	--	--	**--**	**--**	**1.5E-01**
Hexachlorobutadiene[C]	0	--	--	1.8E+02	--	--	9.0E+03	--	--	--	--	--	--	**--**	**--**	**9.0E+03**
Hexachlorocyclohexane Alpha-BHC[C]	0	--	--	4.9E-02	--	--	2.5E+00	--	--	--	--	--	--	**--**	**--**	**2.5E+00**
Hexachlorocyclohexane Beta-BHC[C]	0	--	--	1.7E-01	--	--	8.5E+00	--	--	--	--	--	--	**--**	**--**	**8.5E+00**
Hexachlorocyclohexane Gamma-BHC[C] (Lindane)	0	1.6E-01	--	1.8E+00	3.2E-01	--	9.0E+01	--	--	--	--	--	--	**3.2E-01**	**--**	**9.0E+01**
Hexachlorocyclopentadiene	0	--	--	1.1E+03	--	--	5.5E+04	--	--	--	--	--	--	**--**	**--**	**5.5E+04**
Hexachloroethane[C]	0	--	--	3.3E+01	--	--	1.7E+03	--	--	--	--	--	--	**--**	**--**	**1.7E+03**
Hydrogen Sulfide	0	--	2.0E+00	--	--	1.0E+02	--	--	--	--	--	--	--	**--**	**1.0E+02**	**--**
Indeno (1,2,3-cd) pyrene C	0	--	--	1.8E-01	--	--	9.0E+00	--	--	--	--	--	--	**--**	**--**	**9.0E+00**
Isophorone[C]	0	--	--	9.6E+03	--	--	4.8E+05	--	--	--	--	--	--	**--**	**--**	**4.8E+05**
Kepone	0	--	0.0E+00	--	--	0.0E+00	--	--	--	--	--	--	--	**--**	**0.0E+00**	**--**
Lead	0	2.4E+02	9.3E+00	--	4.8E+02	4.7E+02	--	--	--	--	--	--	--	**4.8E+02**	**4.7E+02**	**--**
Malathion	0	--	1.0E-01	--	--	5.0E+00	--	--	--	--	--	--	--	**--**	**5.0E+00**	**--**
Mercury	0	1.8E+00	9.4E-01	--	3.6E+00	4.7E+01	--	--	--	--	--	--	--	**3.6E+00**	**4.7E+01**	**--**
Methyl Bromide	0	--	--	1.5E+03	--	--	7.5E+04	--	--	--	--	--	--	**--**	**--**	**7.5E+04**
Methylene Chloride [C]	0	--	--	5.9E+03	--	--	3.0E+05	--	--	--	--	--	--	**--**	**--**	**3.0E+05**
Methoxychlor	0	--	3.0E-02	--	--	1.5E+00	--	--	--	--	--	--	--	**--**	**1.5E+00**	**--**
Mirex	0	--	0.0E+00	--	--	0.0E+00	--	--	--	--	--	--	--	**--**	**0.0E+00**	**--**
Nickel	0	7.4E+01	8.2E+00	4.6E+03	1.5E+02	4.1E+02	2.3E+05	--	--	--	--	--	--	**1.5E+02**	**4.1E+02**	**2.3E+05**
Nitrobenzene	0	--	--	6.9E+02	--	--	3.5E+04	--	--	--	--	--	--	**--**	**--**	**3.5E+04**
N-Nitrosodimethylamine[C]	0	--	--	3.0E+01	--	--	1.5E+03	--	--	--	--	--	--	**--**	**--**	**1.5E+03**
N-Nitrosodiphenylamine[C]	0	--	--	6.0E+01	--	--	3.0E+03	--	--	--	--	--	--	**--**	**--**	**3.0E+03**
N-Nitrosodi-n-propylamine[C]	0	--	--	5.1E+00	--	--	2.6E+02	--	--	--	--	--	--	**--**	**--**	**2.6E+02**
Nonylphenol	0	7.0E+00	1.7E+00	--	1.4E+01	8.5E+01	--	--	--	--	--	--	--	**1.4E+01**	**8.5E+01**	**--**
Parathion	0	--	--	--	--	--	--	--	--	--	--	--	--	**--**	**--**	**--**
PCB Total[C]	0	--	3.0E-02	6.4E-04	--	1.5E+00	3.2E-02	--	--	--	--	--	--	**--**	**1.5E+00**	**3.2E-02**
Pentachlorophenol [C]	0	1.3E+01	7.9E+00	3.0E+01	2.6E+01	4.0E+02	1.5E+03	--	--	--	--	--	--	**2.6E+01**	**4.0E+02**	**1.5E+03**
Phenol	0	--	--	8.6E+05	--	--	4.3E+07	--	--	--	--	--	--	**--**	**--**	**4.3E+07**
Phosphorus (Elemental)	0	--	1.0E-01	--	--	5.0E+00	--	--	--	--	--	--	--	**--**	**5.0E+00**	**--**
Pyrene	0	--	--	4.0E+03	--	--	2.0E+05	--	--	--	--	--	--	**--**	**--**	**2.0E+05**
Selenium	0	2.9E+02	7.1E+01	4.2E+03	5.8E+02	3.6E+03	2.1E+05	--	--	--	--	--	--	**5.8E+02**	**3.6E+03**	**2.1E+05**
Silver	0	1.9E+00	--	--	3.8E+00	--	--	--	--	--	--	--	--	**3.8E+00**	**--**	**--**
1,1,2,2-Tetrachloroethane[C]	0	--	--	4.0E+01	--	--	2.0E+03	--	--	--	--	--	--	**--**	**--**	**2.0E+03**
Tetrachloroethylene[C]	0	--	--	3.3E+01	--	--	1.7E+03	--	--	--	--	--	--	**--**	**--**	**1.7E+03**
Thallium	0	--	--	4.7E-01	--	--	2.4E+01	--	--	--	--	--	--	**--**	**--**	**2.4E+01**
Toluene	0	--	--	6.0E+03	--	--	3.0E+05	--	--	--	--	--	--	**--**	**--**	**3.0E+05**
Toxaphene [C]	0	2.1E-01	2.0E-04	2.8E-03	4.2E-01	1.0E-02	1.4E-01	--	--	--	--	--	--	**4.2E-01**	**1.0E-02**	**1.4E-01**
Tributyltin	0	4.2E-01	7.4E-03	--	8.4E-01	3.7E-01	--	--	--	--	--	--	--	**8.4E-01**	**3.7E-01**	**--**

Parameter	Background	Water Quality Criteria			Wasteload Allocations			Antidegradation Baseline			Antidegradation Allocations			**Most Limiting Allocations**		
(ug/l unless noted)	Conc.	Acute	Chronic	HH	Acute	Chronic	HH	Acute	Chronic	HH	Acute	Chronic	HH	**Acute**	**Chronic**	**HH**
1,2,4-Trichlorobenzene	0	--	--	7.0E+01	--	--	3.5E+03	--	--	--	--	--	--	**--**	**--**	**3.5E+03**
1,1,2-Trichloroethane[C]	0	--	--	1.6E+02	--	--	8.0E+03	--	--	--	--	--	--	**--**	**--**	**8.0E+03**
Trichloroethylene [C]	0	--	--	3.0E+02	--	--	1.5E+04	--	--	--	--	--	--	**--**	**--**	**1.5E+04**
2,4,6-Trichlorophenol [C]	0	--	--	2.4E+01	--	--	1.2E+03	--	--	--	--	--	--	**--**	**--**	**1.2E+03**
Vinyl Chloride[C]	0	--	--	2.4E+01	--	--	1.2E+03	--	--	--	--	--	--	**--**	**--**	**1.2E+03**
Zinc	0	9.0E+01	8.1E+01	2.6E+04	1.8E+02	4.1E+03	1.3E+06	--	--	--	--	--	--	**1.8E+02**	**4.1E+03**	**1.3E+06**

Notes:

1. All concentrations expressed as micrograms/liter (ug/l), unless noted otherwise
2. Discharge flow is highest monthly average or Form 2C maximum for Industries and design flow for Municipals
3. Metals measured as Dissolved, unless specified otherwise
4. "C" indicates a carcinogenic parameter
5. For transition zone waters, spreadsheet prints the lesser of the freshwater and saltwater water quality criteria.
6. Regular WLA = (WQC x WLA multiplier) - (WLA multiplier - 1)(background conc.)
7. Antideg. Baseline = (0.25(WQC - background conc.) + background conc.) for acute and chronic
   = (0.1(WQC - background conc.) + background conc.) for human health
8. Antideg. WLA = (Antideg. Baseline)(WLA multiplier) - (WLA multiplier - 1)(background conc.)

Metal	Site Specific Target Value (SSTV)
Antimony	3.2E+04
Arsenic III	5.5E+01
Cadmium	3.2E+01
Chromium III	#VALUE!
Chromium VI	8.8E+02
Copper	7.4E+00
Lead	1.9E+02
Mercury	1.4E+00
Nickel	5.9E+01
Selenium	2.3E+02
Silver	1.5E+00
Zinc	7.2E+01

Note: do not use QL's lower than the minimum QL's provided in agency guidance

Temperature Screening: (Non-heated Discharge)

NOTE: The temperature screening below roughly evaluates the projected rise in temperature within the mixing zone during low flow conditions using 90%tile effluent temperature, and either 10%tile ambient temperature for heated discharges or 90%tile ambient temperature for non-heated discharges . If the projected rise in temperature exceeds the applicable temperature standard, further evaluation is necessary to determine a temperature limitation is warranted.

Acute - Maximum Allowable Rise Over Ambient = **2 ˚C**

Acute Mix Temperature (Non-heated Discharge)

$$\frac{((0.02\ \text{MGD} \times 27^{\circ}\text{C}) + (0.02\ \text{MGD} \times 27^{\circ}\text{C}))}{(0.04\ \text{MGD})} = 27\ ^{\circ}\text{C}$$

ΔT ˚C above ambient ► 27 ˚C - 27˚C = **0 ˚C**

Further Evaluation Needed? **NO**

Chronic - Maximum Allowable Rise Over Ambient = **3 ˚C**

Chronic Mix Temperature (Non-heated Discharge)

$$\frac{((0.98\ \text{MGD} \times 27^{\circ}\text{C}) + (0.02\ \text{MGD} \times 27^{\circ}\text{C}))}{(1\ \text{MGD})} = 27\ ^{\circ}\text{C}$$

ΔT ˚C above ambient ► 27 ˚C - 27˚C = **0 ˚C**

Further Evaluation Needed? **NO**

1/16/2013 11:08:42 AM

Facility = Mizpah Nursing Home, Inc WWTP
Chemical = Ammonia
Chronic averaging period = 30
WLAa = 2.96
WLAc = 16.4
Q.L. = 0.2
# samples/mo. = 1
# samples/wk. = 1

Summary of Statistics:

observations = 1
Expected Value = 9
Variance = 29.16
C.V. = 0.6
97th percentile daily values = 21.9007
97th percentile 4 day average = 14.9741
97th percentile 30 day average= 10.8544
< Q.L. = 0
Model used = BPJ Assumptions, type 2 data

A limit is needed based on Acute Toxicity
Maximum Daily Limit = 2.96
Average Weekly limit = 2.96
Average Monthly LImit = 2.96

The data are:

9.0

1/16/2013 11:38:30 AM

Facility = Mizpah Nursing Home, Inc. WWTP
Chemical = TRC (CPO)
Chronic averaging period = 4
WLAa = 26
WLAc = 380
Q.L. = 100
# samples/mo. = 30
# samples/wk. = 7

Summary of Statistics:

observations = 1
Expected Value = 20000
Variance = 1440000
C.V. = 0.6
97th percentile daily values = 48668.3
97th percentile 4 day average = 33275.8
97th percentile 30 day average= 24121.0
< Q.L. = 0
Model used = BPJ Assumptions, type 2 data

A limit is needed based on Acute Toxicity
Maximum Daily Limit = 26
Average Weekly limit = 15.8783873755527
Average Monthly LImit = 12.8861502605597

The data are:

20000

SALTWATER AND TRANSITION ZONES
WATER QUALITY CRITERIA / WASTELOAD ALLOCATION ANALYSIS

Facility Name: Mizpah Nursing Home STP Permit No.: VA0063029 Version: OWP Guidance Memo 00-2011 (8/24/00)
Receiving Stream: Rappahannock River

Stream Information		
Mean Hardness (as CaCO3) =		mg/l
90th % Temperature (Annual) =	27	(^{o} C)
90th % Temperature (Winter) =		(^{o} C)
90th % Maximum pH =	8.1	
10th % Maximum pH =	7.5	
Tier Designation (1 or 2) =	1	
Early Life Stages Present Y/N =		
Tidal Zone =	1	(1 = saltwater, 2 = transition zone)
Mean Salinity =	7.71	(g/kg)

Mixing Information	
Design Flow (MGD)	0.02
Acute WLA multiplier	2
Chronic WLA multiplier	51
Human health WLA multiplier	51

Effluent Information		
Mean Hardness (as CaCO3) =	25	mg/L
90 % Temperature (Annual) =	25	(^{o} C)
90 % Temperature (Winter) =		(^{o} C)
90 % Maximum pH =	8.3	SU
10 % Maximum pH =	7.8	SU
Discharge Flow =	0.02	MGD

Parameter	Background	Water Quality Criteria			Wasteload Allocations			Antidegradation Baseline			Antidegradation Allocations			**Most Limiting Allocations**		
(ug/l unless noted)	Conc.	Acute	Chronic	HH	Acute	Chronic	HH	Acute	Chronic	HH	Acute	Chronic	HH	**Acute**	**Chronic**	**HH**
Acenapthene	0	--	--	2.7E+03	--	--	1.4E+05	--	--	--	--	--	--	--	--	1.4E+05
Acrolein		--	--	7.8E+02	--	--	4.0E+04	--	--	--	--	--	--	--	--	4.0E+04
Acrylonitrile[c]		--	--	6.6E+00	--	--	3.4E+02	--	--	--	--	--	--	--	--	3.4E+02
Aldrin [c]	0	1.3E+00	--	1.4E-03	2.6E+00	--	7.1E-02	--	--	--	--	--	--	2.6E+00	--	7.1E-02
Ammonia-N (mg/l) - Annual	0	2.3E+00	3.9E-01	--	4.5E+00	2.0E+01	--	--	--	--	--	--	--	4.5E+00	2.0E+01	--
Ammonia-N (mg/l) - Winter	0	1.5E+01	2.7E+00	--	2.9E+01	1.4E+02	--	--	--	--	--	--	--	2.9E+01	1.4E+02	--
Anthracene	0	--	--	1.1E+05	--	--	5.6E+06	--	--	--	--	--	--	--	--	5.6E+06
Antimony	0	--	--	4.3E+03	--	--	2.2E+05	--	--	--	--	--	--	--	--	2.2E+05
Arsenic	0	6.9E+01	3.6E+01	--	1.4E+02	1.8E+03	--	--	--	--	--	--	--	1.4E+02	1.8E+03	--
Benzene [c]	0	--	--	7.1E+02	--	--	3.6E+04	--	--	--	--	--	--	--	--	3.6E+04
Benzidine[c]		--	--	5.4E-03	--	--	2.8E-01	--	--	--	--	--	--	--	--	2.8E-01
Benzo (a) anthracene [c]	0	--	--	4.9E-01	--	--	2.5E+01	--	--	--	--	--	--	--	--	2.5E+01
Benzo (b) fluoranthene [c]	0	--	--	4.9E-01	--	--	2.5E+01	--	--	--	--	--	--	--	--	2.5E+01
Benzo (k) fluoranthene [c]	0	--	--	4.9E-01	--	--	2.5E+01	--	--	--	--	--	--	--	--	2.5E+01
Benzo (a) pyrene [c]	0	--	--	4.9E-01	--	--	2.5E+01	--	--	--	--	--	--	--	--	2.5E+01
Bis2-Chloroethyl Ether		--	--	1.4E+01	--	--	7.1E+02	--	--	--	--	--	--	--	--	7.1E+02
Bis2-Chloroisopropyl Ether		--	--	1.7E+05	--	--	8.7E+06	--	--	--	--	--	--	--	--	8.7E+06
Bromoform [c]	0	--	--	3.6E+03	--	--	1.8E+05	--	--	--	--	--	--	--	--	1.8E+05
Butylbenzylphthalate	0	--	--	5.2E+03	--	--	2.7E+05	--	--	--	--	--	--	--	--	2.7E+05
Cadmium	0	4.0E+01	8.8E+00	--	8.0E+01	4.5E+02	--	--	--	--	--	--	--	8.0E+01	4.5E+02	--
Carbon Tetrachloride [c]	0	--	--	4.4E+01	--	--	2.2E+03	--	--	--	--	--	--	--	--	2.2E+03
Chlordane [c]	0	9.0E-02	4.0E-03	2.2E-02	1.8E-01	2.0E-01	1.1E+00	--	--	--	--	--	--	1.8E-01	2.0E-01	1.1E+00
TRC	0			--			--	--	--	--	--	--	--	--	--	--
Chlorine Prod. Oxidant	0	1.3E+01	7.5E+00	--	2.6E+01	3.8E+02	--	--	--	--	--	--	--	2.6E+01	3.8E+02	--

2008 Permit Reissuance (VA0063029)

PDF processed with CutePDF evaluation edition www.CutePDF.com

Parameter	Background	Water Quality Criteria			Wasteload Allocations			Antidegradation Baseline			Antidegradation Allocations			**Most Limiting Allocations**		
(ug/l unless noted)	Conc.	Acute	Chronic	HH	Acute	Chronic	HH	Acute	Chronic	HH	Acute	Chronic	HH	**Acute**	**Chronic**	**HH**
Chlorobenzene		--	--	2.1E+04	--	--	1.1E+06	--	--	--	--	--	--	**--**	**--**	**1.1E+06**
Chlorodibromomethane[C]	0	--	--	3.4E+02	--	--	1.7E+04	--	--	--	--	--	--	**--**	**--**	**1.7E+04**
Chloroform [C]	0	--	--	2.9E+04	--	--	1.5E+06	--	--	--	--	--	--	**--**	**--**	**1.5E+06**
2-Chloronaphthalene	0	--	--	4.3E+03	--	--	2.2E+05	--	--	--	--	--	--	**--**	**--**	**2.2E+05**
2-Chlorophenol	0	--	--	4.0E+02	--	--	2.0E+04	--	--	--	--	--	--	**--**	**--**	**2.0E+04**
Chlorpyrifos	0	1.1E-02	5.6E-03	--	2.2E-02	2.9E-01	--	--	--	--	--	--	--	**2.2E-02**	**2.9E-01**	**--**
Chromium III	0			--			--	--	--	--	--	--	--	**--**	**--**	**--**
Chromium VI	0	1.1E+03	5.0E+01	--	2.2E+03	2.6E+03	--	--	--	--	--	--	--	**2.2E+03**	**2.6E+03**	**--**
Chrysene [C]	0	--	--	4.9E-01	--	--	2.5E+01	--	--	--	--	--	--	**--**	**--**	**2.5E+01**
Copper	0	9.3E+00	6.0E+00	--	1.9E+01	3.1E+02	--	--	--	--	--	--	--	**1.9E+01**	**3.1E+02**	**--**
Cyanide	0	1.0E+00	1.0E+00	2.2E+05	2.0E+00	5.1E+01	1.1E+07	--	--	--	--	--	--	**2.0E+00**	**5.1E+01**	**1.1E+07**
DDD [C]	0	--	--	8.4E-03	--	--	4.3E-01	--	--	--	--	--	--	**--**	**--**	**4.3E-01**
DDE [C]	0	--	--	5.9E-03	--	--	3.0E-01	--	--	--	--	--	--	**--**	**--**	**3.0E-01**
DDT [C]	0	1.3E-01	1.0E-03	5.9E-03	2.6E-01	5.1E-02	3.0E-01	--	--	--	--	--	--	**2.6E-01**	**5.1E-02**	**3.0E-01**
Demeton	0	--	1.0E-01	--	--	5.1E+00	--	--	--	--	--	--	--	**--**	**5.1E+00**	**--**
Dibenz(a,h)anthracene [C]	0	--	--	4.9E-01	--	--	2.5E+01	--	--	--	--	--	--	**--**	**--**	**2.5E+01**
Dibutyl phthalate	0	--	--	1.2E+04	--	--	6.1E+05	--	--	--	--	--	--	**--**	**--**	**6.1E+05**
Dichloromethane (Methylene Chloride)[C]	0	--	--	1.6E+04	--	--	8.2E+05	--	--	--	--	--	--	**--**	**--**	**8.2E+05**
1,2-Dichlorobenzene	0	--	--	1.7E+04	--	--	8.7E+05	--	--	--	--	--	--	**--**	**--**	**8.7E+05**
1,3-Dichlorobenzene	0	--	--	2.6E+03	--	--	1.3E+05	--	--	--	--	--	--	**--**	**--**	**1.3E+05**
1,4-Dichlorobenzene	0	--	--	2.6E+03	--	--	1.3E+05	--	--	--	--	--	--	**--**	**--**	**1.3E+05**
3,3-Dichlorobenzidine[C]	0	--	--	7.7E-01	--	--	3.8E+01	--	--	--	--	--	--			
Dichlorobromomethane [C]	0	--	--	4.6E+02	--	--	2.3E+04	--	--	--	--	--	--	**--**	**--**	**2.3E+04**
1,2-Dichloroethane [C]	0	--	--	9.9E+02	--	--	5.0E+04	--	--	--	--	--	--	**--**	**--**	**5.0E+04**
1,1-Dichloroethylene	0	--	--	1.7E+04	--	--	8.7E+05	--	--	--	--	--	--	**--**	**--**	**8.7E+05**
1,2-trans-dichloroethylene	0	--	--	1.4E+05	--	--	7.1E+06	--	--	--	--	--	--	**--**	**--**	**7.1E+06**
2,4-Dichlorophenol	0	--	--	7.9E+02	--	--	4.0E+04	--	--	--	--	--	--	**--**	**--**	**4.0E+04**
1,2-Dichloropropane[C]	0	--	--	3.9E+02	--	--	2.0E+04	--	--	--	--	--	--	**--**	**--**	**2.0E+04**
1,3-Dichloropropene	0	--	--	1.7E+03	--	--	8.7E+04	--	--	--	--	--	--	**--**	**--**	**8.7E+04**
Dieldrin [C]	0	7.1E-01	1.9E-03	1.4E-03	1.4E+00	9.7E-02	7.1E-02	--	--	--	--	--	--	**1.4E+00**	**9.7E-02**	**7.1E-02**
Diethyl Phthalate	0	--	--	1.2E+05	--	--	6.1E+06	--	--	--	--	--	--	**--**	**--**	**6.1E+06**
Di-2-Ethylhexyl Phthalate [C]	0	--	--	5.9E+01	--	--	3.0E+03	--	--	--	--	--	--	**--**	**--**	**3.0E+03**
2,4-Dimethylphenol	0	--	--	2.3E+03	--	--	1.2E+05	--	--	--	--	--	--	**--**	**--**	**1.2E+05**
Dimethyl Phthalate	0	--	--	2.9E+06	--	--	1.5E+08	--	--	--	--	--	--	**--**	**--**	**1.5E+08**
Di-n-Butyl Phthalate	0	--	--	1.2E+04	--	--	6.1E+05	--	--	--	--	--	--	**--**	**--**	**6.1E+05**
2,4 Dinitrophenol	0	--	--	1.4E+04	--	--	7.1E+05	--	--	--	--	--	--	**--**	**--**	**7.1E+05**
2-Methyl-4,6-Dinitrophenol	0	--	--	7.65E+02	--	--	3.9E+04	--	--	--	--	--	--	**--**	**--**	**3.9E+04**
2,4-Dinitrotoluene [C]	0	--	--	9.1E+01	--	--	4.6E+03	--	--	--	--	--	--	**--**	**--**	**4.6E+03**
Dioxin (2,3,7,8-tetrachlorodibenzo-p-dioxin) (ppq)	0	--	--	1.2E-06	--	--	6.1E-05	--	--	--	--	--	--	**--**	**--**	**6.1E-05**
1,2-Diphenylhydrazine[C]	0	--	--	5.4E+00	--	--	2.8E+02	--	--	--	--	--	--	**--**	**--**	**2.8E+02**
Alpha-Endosulfan	0	3.4E-02	8.7E-03	2.4E+02	6.8E-02	4.4E-01	1.2E+04	--	--	--	--	--	--	**6.8E-02**	**4.4E-01**	**1.2E+04**

2008 Permit Reissuance (VA0063029)

Parameter	Background	Water Quality Criteria			Wasteload Allocations			Antidegradation Baseline			Antidegradation Allocations			**Most Limiting Allocations**		
(ug/l unless noted)	Conc.	Acute	Chronic	HH	Acute	Chronic	HH	Acute	Chronic	HH	Acute	Chronic	HH	**Acute**	**Chronic**	**HH**
Beta-Endosulfan	0	3.4E-02	8.7E-03	2.4E+02	6.8E-02	4.4E-01	1.2E+04	--	--	--	--	--	--	**6.8E-02**	**4.4E-01**	**1.2E+04**
Endosulfan Sulfate	0	--	--	2.4E+02	--	--	1.2E+04	--	--	--	--	--	--	**--**	**--**	**1.2E+04**
Endrin	0	3.7E-02	2.3E-03	8.1E-01	7.4E-02	1.2E-01	4.1E+01	--	--	--	--	--	--	**7.4E-02**	**1.2E-01**	**4.1E+01**
Endrin Aldehyde	0	--	--	8.1E-01	--	--	4.1E+01	--	--	--	--	--	--	**--**	**--**	**4.1E+01**
Ethylbenzene	0	--	--	2.9E+04	--	--	1.5E+06	--	--	--	--	--	--	**--**	**--**	**1.5E+06**
Fluoranthene	0	--	--	3.7E+02	--	--	1.9E+04	--	--	--	--	--	--	**--**	**--**	**1.9E+04**
Fluorene	0	--	--	1.4E+04	--	--	7.1E+05	--	--	--	--	--	--	**--**	**--**	**7.1E+05**
Guthion	0	--	1.0E-02	--	--	5.1E-01	--	--	--	--	--	--	--	**--**	**5.1E-01**	**--**
Heptachlor [C]	0	5.3E-02	3.6E-03	2.1E-03	1.1E-01	1.8E-01	1.1E-01	--	--	--	--	--	--	**1.1E-01**	**1.8E-01**	**1.1E-01**
Heptachlor Epoxide[C]	0	5.3E-02	3.6E-03	1.1E-03	1.1E-01	1.8E-01	5.6E-02	--	--	--	--	--	--	**1.1E-01**	**1.8E-01**	**5.6E-02**
Hexachlorobenzene[C]	0	--	--	7.7E-03	--	--	3.9E-01	--	--	--	--	--	--	**--**	**--**	**3.9E-01**
Hexachlorobutadiene[C]	0	--	--	5.0E+02	--	--	2.6E+04	--	--	--	--	--	--	**--**	**--**	**2.6E+04**
Hexachlorocyclohexane Alpha-BHC[C]	0	--	--	1.3E-01	--	--	6.6E+00	--	--	--	--	--	--	**--**	**--**	**6.6E+00**
Hexachlorocyclohexane Beta-BHC[C]	0	--	--	4.6E-01	--	--	2.3E+01	--	--	--	--	--	--	**--**	**--**	**2.3E+01**
Hexachlorocyclohexane Gamma-BHC[C] (Lindane)	0	1.6E-01	--	6.3E-01	3.2E-01	--	3.2E+01	--	--	--	--	--	--	**3.2E-01**	**--**	**3.2E+01**
Hexachlorocyclopentadiene	0	--	--	1.7E+04	--	--	8.7E+05	--	--	--	--	--	--	**--**	**--**	**8.7E+05**
Hexachloroethane[C]	0	--	--	8.9E+01	--	--	4.5E+03	--	--	--	--	--	--	**--**	**--**	**4.5E+03**
Hydrogen Sulfide	0	--	2.0E+00		--	1.0E+02	--	--	--	--	--	--	--	**--**	**1.0E+02**	**--**
Indeno (1,2,3-cd) pyrene C	0	--	--	4.9E-01	--	--	2.5E+01	--	--	--	--	--	--	**--**	**--**	**2.5E+01**
Isophorone[C]	0	--	--	2.6E+04	--	--	1.3E+06	--	--	--	--	--	--	**--**	**--**	**1.3E+06**
Kepone	0	--	0.0E+00	--	--	0.0E+00	--	--	--	--	--	--	--	**--**	**0.0E+00**	**--**
Lead	0	2.4E+02	9.3E+00	--	4.8E+02	4.7E+02	--	--	--	--	--	--	--	**4.8E+02**	**4.7E+02**	**--**
Malathion	0	--	1.0E-01	--	--	5.1E+00	--	--	--	--	--	--	--	**--**	**5.1E+00**	**--**
Mercury	0	1.8E+00	9.4E-01	5.1E-02	3.6E+00	4.8E+01	2.6E+00	--	--	--	--	--	--	**3.6E+00**	**4.8E+01**	**2.6E+00**
Methyl Bromide	0	--	--	4.0E+03	--	--	2.0E+05	--	--	--	--	--	--	**--**	**--**	**2.0E+05**
Methoxychlor	0	--	3.0E-02	--	--	1.5E+00	--	--	--	--	--	--	--	**--**	**1.5E+00**	**--**
Mirex	0	--	0.0E+00	--	--	0.0E+00	--	--	--	--	--	--	--	**--**	**0.0E+00**	**--**
Monochlorobenzene	0	--	--	2.1E+04	--	--	1.1E+06	--	--	--	--	--	--	**--**	**--**	**1.1E+06**
Nickel	0	7.4E+01	8.2E+00	4.6E+03	1.5E+02	4.2E+02	2.3E+05	--	--	--	--	--	--	**1.5E+02**	**4.2E+02**	**2.3E+05**
Nitrobenzene	0	--	--	1.9E+03	--	--	9.7E+04	--	--	--	--	--	--	**--**	**--**	**9.7E+04**
N-Nitrosodimethylamine[C]	0	--	--	8.1E+01	--	--	4.1E+03	--	--	--	--	--	--	**--**	**--**	**4.1E+03**
N-Nitrosodiphenylamine[C]	0	--	--	1.6E+02	--	--	8.2E+03	--	--	--	--	--	--	**--**	**--**	**8.2E+03**
N-Nitrosodi-n-propylamine[C]	0	--	--	1.4E+01	--	--	7.1E+02	--	--	--	--	--	--	**--**	**--**	**7.1E+02**
Parathion	0			--			--	--	--	--	--	--	--	**--**	**--**	**--**
PCB-1016	0	--	3.0E-02	--	--	1.5E+00	--	--	--	--	--	--	--	**--**	**1.5E+00**	**--**
PCB-1221	0	--	3.0E-02	--	--	1.5E+00	--	--	--	--	--	--	--	**--**	**1.5E+00**	**--**
PCB-1232	0	--	3.0E-02	--	--	1.5E+00	--	--	--	--	--	--	--	**--**	**1.5E+00**	**--**
PCB-1242	0	--	3.0E-02	--	--	1.5E+00	--	--	--	--	--	--	--	**--**	**1.5E+00**	**--**
PCB-1248	0	--	3.0E-02	--	--	1.5E+00	--	--	--	--	--	--	--	**--**	**1.5E+00**	**--**
PCB-1254	0	--	3.0E-02	--	--	1.5E+00	--	--	--	--	--	--	--	**--**	**1.5E+00**	**--**

2008 Permit Reissuance (VA0063029)

Parameter	Background	Water Quality Criteria			Wasteload Allocations			Antidegradation Baseline			Antidegradation Allocations			**Most Limiting Allocations**		
(ug/l unless noted)	Conc.	Acute	Chronic	HH	Acute	Chronic	HH	Acute	Chronic	HH	Acute	Chronic	HH	**Acute**	**Chronic**	**HH**
PCB-1260	0	--	3.0E-02	--	--	1.5E+00	--	--	--	--	--	--	--	**--**	**1.5E+00**	**--**
PCB Total[C]	0	--	--	1.7E-03	--	--	8.7E-02	--	--	--	--	--	--	**--**	**--**	**8.7E-02**
Pentachlorophenol [C]	0	1.3E+01	7.9E+00	8.2E+01	2.6E+01	4.0E+02	4.2E+03	--	--	--	--	--	--	**2.6E+01**	**4.0E+02**	**4.2E+03**
Phenol	0	--	--	4.6E+06	--	--	2.3E+08	--	--	--	--	--	--	**--**	**--**	**2.3E+08**
Phosphorus (Elemental)	0	--	0.1	--	--	5.1E+00	--	--	--	--	--	--	--	**--**	**5.1E+00**	**--**
Pyrene	0	--	--	1.1E+04	--	--	5.6E+05	--	--	--	--	--	--	**--**	**--**	**5.6E+05**
Radionuclides (pCi/l except Beta/Photon)	0	--	--	--	--	--	--	--	--	--	--	--	--	**--**	**--**	**--**
Gross Alpha Activity	0	--	--	1.5E+01	--	--	7.7E+02	--	--	--	--	--	--	**--**	**--**	**7.7E+02**
Beta and Photon Activity (mrem/yr)	0	--	--	4.0E+00	--	--	2.0E+02	--	--	--	--	--	--	**--**	**--**	**2.0E+02**
Strontium-90	0	--	--	8.0E+00	--	--	4.1E+02	--	--	--	--	--	--	**--**	**--**	**4.1E+02**
Tritium	0	--	--	2.0E+04	--	--	1.0E+06	--	--	--	--	--	--	**--**	**--**	**1.0E+06**
Selenium	0	3.0E+02	7.1E+01	1.1E+04	6.0E+02	3.6E+03	5.6E+05	--	--	--	--	--	--	**6.0E+02**	**3.6E+03**	**5.6E+05**
Silver	0	2.0E+00	--	--	4.0E+00	--	--	--	--	--	--	--	--	**4.0E+00**	**--**	**--**
1,1,2,2-Tetrachloroethane[C]	0	--	--	1.1E+02	--	--	5.6E+03	--	--	--	--	--	--	**--**	**--**	**5.6E+03**
Tetrachloroethylene[C]	0	--	--	8.9E+01	--	--	4.5E+03	--	--	--	--	--	--	**--**	**--**	**4.5E+03**
Thallium	0	--	--	6.3E+00	--	--	3.2E+02	--	--	--	--	--	--	**--**	**--**	**3.2E+02**
Toluene	0	--	--	2.0E+05	--	--	1.0E+07	--	--	--	--	--	--	**--**	**--**	**1.0E+07**
Toxaphene [C]	0	2.1E-01	2.0E-04	7.5E-03	4.2E-01	1.0E-02	3.8E-01	--	--	--	--	--	--	**4.2E-01**	**1.0E-02**	**3.8E-01**
Tributyltin	0	3.8E-01	1.0E-03	--	7.6E-01	5.1E-02	--	--	--	--	--	--	--	**7.6E-01**	**5.1E-02**	**--**
1,2,4-Trichlorobenzene	0	--	--	9.4E+02	--	--	4.8E+04	--	--	--	--	--	--	**--**	**--**	**4.8E+04**
1,1,2-Trichloroethane[C]		--	--	4.2E+02	--	--	2.1E+04	--	--	--	--	--	--	**--**	**--**	**2.1E+04**
Trichloroethylene [C]	0	--	--	8.1E+02	--	--	4.1E+04	--	--	--	--	--	--	**--**	**--**	**4.1E+04**
2,4,6-Trichlorophenol [C]	0	--	--	6.5E+01	--	--	3.3E+03	--	--	--	--	--	--	**--**	**--**	**3.3E+03**
Vinyl Chloride[C]	0	--	--	6.1E+01	--	--	3.1E+03	--	--	--	--	--	--	**--**	**--**	**3.1E+03**
Zinc	0	9.0E+01	8.1E+01	6.9E+04	1.8E+02	4.1E+03	3.5E+06	--	--	--	--	--	--	**1.8E+02**	**4.1E+03**	**3.5E+06**

2008 Permit Reissuance (VA0063029)

Notes:

1. All concentrations expressed as micrograms/liter (ug/l), unless noted otherwise
2. Discharge flow is highest monthly average or Form 2C maximum for Industries and design flow for Municipals
3. Metals measured as Dissolved, unless specified otherwise
4. "C" indicates a carcinogenic parameter
5. For transition zone waters, spreadsheet prints the lesser of the freshwater and saltwater water quality criteria.
6. Regular WLA = (WQC x WLA multiplier) - (WLA multiplier - 1)(background conc.)
7. Antideg. Baseline = (0.25(WQC - background conc.) + background conc.) for acute and chronic
   = (0.1(WQC - background conc.) + background conc.) for human health
8. Antideg. WLA = (Antideg. Baseline)(WLA multiplier) - (WLA multiplier - 1)(background conc.)

Metal	Site Specific Target Value (SSTV)
Antimony	2.2E+05
Arsenic III	5.5E+01
Cadmium	3.2E+01
Chromium III	#VALUE!
Chromium VI	8.8E+02
Copper	7.4E+00
Lead	1.9E+02
Mercury	1.4E+00
Nickel	5.9E+01
Selenium	2.4E+02
Silver	1.6E+00
Zinc	7.2E+01

Note: do not use QL's lower than the minimum QL's provided in agency guidance

5/28/2008 9:58:50 AM

Facility = Mizpah Nursing Home STP
Chemical = Ammonia
Chronic averaging period = 30
WLAa = 4.5
WLAc = 20
Q.L. = 0.2
# samples/mo. = 1
# samples/wk. = 1

Summary of Statistics:

observations = 1
Expected Value = 9
Variance = 29.16
C.V. = 0.6
97th percentile daily values = 21.9007
97th percentile 4 day average = 14.9741
97th percentile 30 day average= 10.8544
< Q.L. = 0
Model used = BPJ Assumptions, type 2 data

2008 Permit Reissuance (VA0063029)

A limit is needed based on Acute Toxicity
Maximum Daily Limit = 4.5
Average Weekly limit = 4.5
Average Monthly LImit = 4.5

The data are:

9

PDF processed with CutePDF evaluation edition www.CutePDF.com

5/28/2008 10:01:36 AM

Facility = Mizpah Nursing Home STP
Chemical = TRC (Using CPO)
Chronic averaging period = 4
WLAa = 26
WLAc = 380
Q.L. = 0.1
# samples/mo. = 30
# samples/wk. = 8

Summary of Statistics:

observations = 1
Expected Value = 20000
Variance = 1440000
C.V. = 0.6
97th percentile daily values = 48668.3
97th percentile 4 day average = 33275.8
97th percentile 30 day average= 24121.0
< Q.L. = 0
Model used = BPJ Assumptions, type 2 data

2008 Permit Reissuance (VA0063029)

A limit is needed based on Acute Toxicity
Maximum Daily Limit = 26
Average Weekly limit = 15.5091322334578
Average Monthly LImit = 12.8861502605597

The data are:

20000

PDF processed with CutePDF evaluation edition www.CutePDF.com

Attachment G

Federal Effluent Guideline 40 CFR 133.102 (Secondary Treatment)

AUTHENTICATED
U.S. GOVERNMENT
INFORMATION
GPO

(d) *BOD*. The five day measure of the pollutant parameter biochemical oxygen demand (BOD).

(e) *$CBOD_5$*. The five day measure of the pollutant parameter carbonaceous biochemical oxygen demand ($CBOD_5$).

(f) *Effluent concentrations consistently achievable through proper operation and maintenance*. (1) For a given pollutant parameter, the 95th percentile value for the 30-day average effluent quality achieved by a treatment works in a period of at least two years, excluding values attributable to upsets, bypasses, operational errors, or other unusual conditions, and (2) a 7-day average value equal to 1.5 times the value derived under paragraph (f)(1) of this section.

(g) *Facilities eligible for treatment equivalent to secondary treatment*. Treatment works shall be eligible for consideration for effluent limitations described for treatment equivalent to secondary treatment (§ 133.105), if:

(1) The BOD_5 and SS effluent concentrations consistently achievable through proper operation and maintenance (§ 133.101(f)) of the treatment works exceed the minimum level of the effluent quality set forth in §§ 133.102(a) and 133.102(b),

(2) A trickling filter or waste stabilization pond is used as the principal process, and

(3) The treatment works provide significant biological treatment of municipal wastewater.

(h) *mg/l*. Milligrams per liter.

(i) *NPDES*. National Pollutant Discharge Elimination System.

(j) *Percent removal*. A percentage expression of the removal efficiency across a treatment plant for a given pollutant parameter, as determined from the 30-day average values of the raw wastewater influent pollutant concentrations to the facility and the 30-day average values of the effluent pollutant concentrations for a given time period.

(k) *Significant biological treatment*. The use of an aerobic or anaerobic biological treatment process in a treatment works to consistently achieve a 30-day average of a least 65 percent removal of BOD_5.

(l) *SS*. The pollutant parameter total suspended solids.

(m) *Significantly more stringent limitation* means BOD_5 and SS limitations necessary to meet the percent removal requirements of at least 5 mg/l more stringent than the otherwise applicable concentration-based limitations (e.g., less than 25 mg/l in the case of the secondary treatment limits for BOD_5 and SS), or the percent removal limitations in §§ 133.102 and 133.105, if such limits would, by themselves, force significant construction or other significant capital expenditure.

(n) *State Director* means the chief administrative officer of any State or interstate agency operating an ''approved program,'' or the delegated representative of the State Director.

[49 FR 37006, Sept. 20, 1984; 49 FR 40405, Oct. 16, 1984, as amended at 50 FR 23387, June 3, 1985]

§ 133.102 Secondary treatment.

The following paragraphs describe the minimum level of effluent quality attainable by secondary treatment in terms of the parameters—BOD_5, SS and pH. All requirements for each parameter shall be achieved except as provided for in §§ 133.103 and 133.105.

(a) *BOD_5*.

(1) The 30-day average shall not exceed 30 mg/l.

(2) The 7-day average shall not exceed 45 mg/l.

(3) The 30-day average percent removal shall not be less than 85 percent.

(4) At the option of the NPDES permitting authority, in lieu of the parameter BOD_5 and the levels of the effluent quality specified in paragraphs (a)(1), (a)(2) and (a)(3), the parameter $CBOD_5$ may be substituted with the following levels of the $CBOD_5$ effluent quality provided:

(i) The 30-day average shall not exceed 25 mg/l.

(ii) The 7-day average shall not exceed 40 mg/l.

(iii) The 30-day average percent removal shall not be less than 85 percent.

(b) *SS*. (1) The 30-day average shall not exceed 30 mg/l.

(2) The 7-day average shall not exceed 45 mg/l.

(3) The 30-day average percent removal shall not be less than 85 percent.

(c) *pH*. The effluent values for pH shall be maintained within the limits

of 6.0 to 9.0 unless the publicly owned treatment works demonstrates that: (1) Inorganic chemicals are not added to the waste stream as part of the treatment process; and (2) contributions from industrial sources do not cause the pH of the effluent to be less than 6.0 or greater than 9.0.

[49 FR 37006, Sept. 20, 1984; 49 FR 40405, Oct. 16, 1984]

§ 133.103 Special considerations.

(a) *Combined sewers.* Treatment works subject to this part may not be capable of meeting the percentage removal requirements established under §§ 133.102(a)(3) and 133.102(b)(3), or §§ 133.105(a)(3) and 133.105(b)(3) during wet weather where the treatment works receive flows from combined sewers (*i.e.*, sewers which are designed to transport both storm water and sanitary sewage). For such treatment works, the decision must be made on a case-by-case basis as to whether any attainable percentage removal level can be defined, and if so, what the level should be.

(b) *Industrial wastes.* For certain industrial categories, the discharge to navigable waters of BOD_5 and SS permitted under sections 301(b)(1)(A)(i), (b)(2)(E) or 306 of the Act may be less stringent than the values given in §§ 133.102(a)(1), 133.102(a)(4)(i), 133.102(b)(1), 133.105(a)(1), 133.105(b)(1) and 133.105(e)(1)(i). In cases when wastes would be introduced from such an industrial category into a publicly owned treatment works, the values for BOD_5 and SS in §§ 133.102(a)(1), 133.102(a)(4)(i), 133.102(b)(1), 133.105(a)(1), 133.105(b)(1), and 133.105(e)(1)(i) may be adjusted upwards provided that: (1) The permitted discharge of such pollutants, attributable to the industrial category, would not be greater than that which would be permitted under sections 301(b)(1)(A)(i), 301(b)(2)(E) or 306 of the Act if such industrial category were to discharge directly into the navigable waters, and (2) the flow or loading of such pollutants introduced by the industrial category exceeds 10 percent of the design flow or loading of the publicly owned treatment works. When such an adjustment is made, the values for BOD_5 or SS in §§ 133.102(a)(2), 133.102(a)(4)(ii), § 133.102(b)(2), 133.105(a)(2), 133.105(b)(2), and 133.105(e)(1)(ii) should be adjusted proportionately.

(c) *Waste stabilization ponds.* The Regional Administrator, or, if appropriate, State Director subject to EPA approval, is authorized to adjust the minimum levels of effluent quality set forth in § 133.105 (b)(1), (b)(2), and (b)(3) for treatment works subject to this part, to conform to the SS concentrations achievable with waste stabilization ponds, provided that: (1) Waste stablization ponds are the principal process used for secondary treatment; and (2) operation and maintenance data indicate that the SS values specified in § 133.105 (b)(1), (b)(2), and (b)(3) cannot be achieved. The term ''SS concentrations achievable with waste stabilization ponds'' means a SS value, determined by the Regional Administrator, or, if appropriate, State Director subject to EPA approval, which is equal to the effluent concentration achieved 90 percent of the time within a State or appropriate contiguous geographical area by waste stabilization ponds that are achieving the levels of effluent quality for BOD_5 specified in § 133.105(a)(1). [cf. 43 FR 55279].

(d) *Less concentrated influent wastewater for separate sewers.* The Regional Administrator or, if appropriate, State Director is authorized to substitute either a lower percent removal requirement or a mass loading limit for the percent removal requirements set forth in §§ 133.102(a)(3), 133.102(a)(4)(iii), 133.102(b)(3), 102.105(a)(3), 133.105(b)(3) and 133.105(e)(1)(iii) provided that the permittee satisfactorily demonstrates that: (1) The treatment works is consistently meeting, or will consistently meet, its permit effluent concentration limits but its percent removal requirements cannot be met due to less concentrated influent wastewater, (2) to meet the percent removal requirements, the treatment works would have to achieve significantly more stringent limitations than would otherwise be required by the concentration-based standards, and (3) the less concentrated influent wastewater is not the result of excessive I/I. The determination of whether the less concentrated wastewater is the result of