Attachment A

- USGS Topographic Map
- Flow Frequency Memorandum
- Mixing Zone Analysis

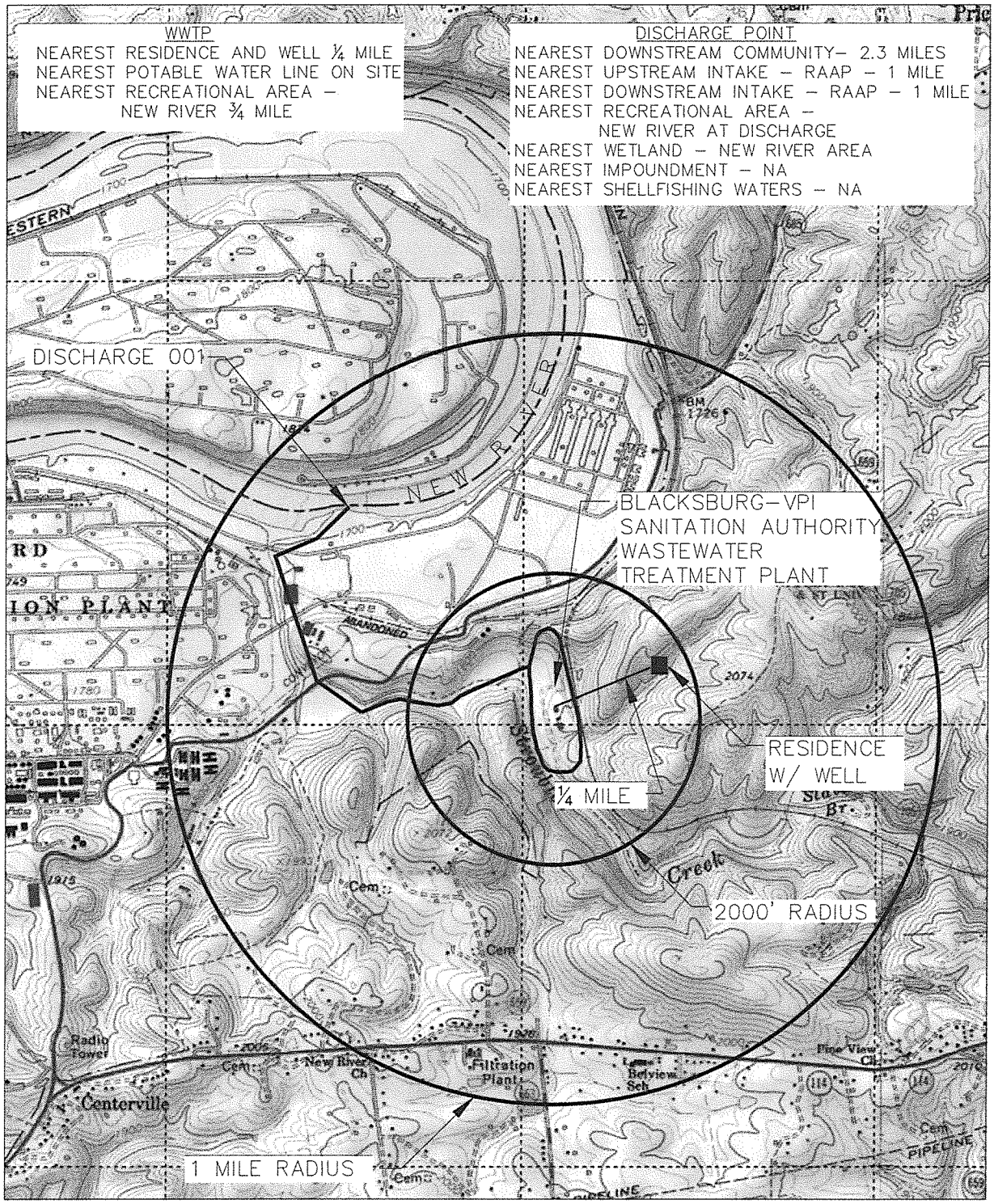

MAP TAKEN FROM NATIONAL GEOGRAPHIC TOPO, BLACKSBURG, VIRGINIA

SCALE: 1"=2000'

Drawing Copyright © 2013

CHA
1901 Innovation Drive, Suite 2100
Blacksburg, VA 24060
Main: (540) 552-5548 • www.chacompanies.com

BLACKSBURG – VPI SANITATION AUTHORITY
VPDES PERMIT APPLICATION

SITE LOCATION MAP

PROJECT NO. 21464

DATE: 12/2013

FIGURE 1

File: V:\PROJECTS\BVA\21464\10729.03-VPDES\FIGURES\FIG 1.DWG Saved: 12/2/2013 2:10:28 PM PLotted: 12/2/2013 2:11:08 PM User: Hodge, Chris LastSavedBy: 3771

MEMORANDUM

VIRGINIA DEPARTMENT OF ENVIRONMENTAL QUALITY
WATER DIVISION
Blue Ridge Regional Office

Subject: Flow Frequencies Determinations for Reissuance of VPDES Permit VA0060844; Lower Stroubles Creek WWTP

To: Permit File

From: Kevin Harlow, Water Permit Writer

Date: April 14, 2014

Attachments: flow calculations spreadsheet; New River withdrawals and discharges data sheet

---

The Lower Stroubles Creek WWTP discharges treated wastewater to the New River below its confluence with Stroubles Creek near Radford, VA. Stream flow frequencies are required at this site for use in developing effluent limitations for the VPDES permit.

The USGS has operated a continuous record gauge on the New River at Radford, VA (#0317100) since 1940. The gauge is located at the Route 11 bridge in Radford, VA. The flow frequencies for the gauge and the discharge point are presented below. The values at the discharge point were calculated using drainage area proportions and account for known withdrawals and discharges located between the gauge and the discharge point, Outfall 001. (Withdrawals and discharges are explained in the next page.) This analysis does not address any other withdrawals, discharges, or springs between the gauge and the discharge point which may influence flow in the New River.

New River at Radford, VA (#03171000)
Drainage Area = 2748 mi^2

1Q30 = 678 cfs	
1Q10 = 719 cfs	High Flow* 1Q10 = 840 cfs
7Q10 = 887 cfs	High Flow* 7Q10 = 1210 cfs
30Q10 = 1020 cfs	High Flow* 30Q10 = 1660 cfs
30Q5 = 1140 cfs	Harmonic Mean* = 2350 cfs

Using drainage area proportions, the river flows were projected to just above the outfall.

New River above discharge point
Drainage Area = 2815 mi^2

1Q30 = 695 cfs = 449 MGD	
1Q10 = 737 cfs = 476 MGD	High Flow* 1Q10 = 860 cfs = 556 MGD
7Q10 = 909 cfs = 587 MGD	High Flow* 7Q10 = 1240 cfs = 801 MGD
30Q10 = 1045 cfs = 675 MGD	High Flow* 30Q10 = 1700 cfs = 1099 MGD
30Q5 = 1168 cfs = 754 MGD	Harmonic Mean* = 2407 cfs = 1555 MGD

Withdrawals by the NRV Regional Water Authority (formerly Blacksburg-Christiansburg-VPI Water Authority) and the Radford Army Ammunition Plant (RAAP) intake #1 are incorporated into the analysis. NRV and RAAP withdrawal data for the five calendar years (2009-2013) before permit reissuance are from the Virginia Water Use Data System and the Virginia Annual Water Withdrawal Reports. Wasted water returned to the New River by the WTPs is not accounted. Discharges from the Christiansburg Wastewater Treatment Plant (WWTP), Peppers Ferry Wastewater Treatment Authority, and RAAP are also incorporated into the analysis. WWTP monthly average discharge data are from discharge monitoring reports for the same five calendar years (2009-2013).

For a very conservative analysis, maximum daily withdrawal values are calculated for the NRV and RAAP facilities. Maximum daily values are calculated for both high flow and low flow months during 2009-2013. Similarly, minimum monthly average discharge values for Christiansburg WWTP, Peppers Ferry WWTP, and RAAP (Outfalls 004, 005, 006, 007, 014, 026, 029) for both high flow and low flow months are used. Withdrawal and discharge data are attached.

The conservative net flow of withdrawals and discharge during high flow periods* is -22.0 MGD. The conservative net flow of withdrawals and discharge during low flow periods is -22.4 MGD.

Accounting for withdrawals and discharges, the flow frequencies at the discharge point are shown below.

New River above discharge point

Drainage Area = 2,815 mi^2

1Q30 = 449 – 22.0 = 424 MGD	
1Q10 = 476 – 22.0 = 451 MGD	High Flow* 1Q10 = 556 – 22.4 = 534 MGD
7Q10 = 587 – 22.0 = 563 MGD	High Flow* 7Q10 = 801 – 22.4 = 779 MGD
30Q10 = 675 – 22.0 = 651 MGD	High Flow* 30Q10 = 1099 – 22.4 = 1076 MGD
30Q5 = 754 – 22.0 = 730 MGD	Harmonic Mean* = 1555 – 22.4 = 1533 MGD

*High flow months are January through May.

Step-by-step flow calculations are in the attached spreadsheet. Gauge flow frequencies were compiled in 2005 with data collected through water year 2003. Subsequent (updated) gauge "low flow" statistics differ 2% or less from those compiled in 2005. Updated gauge "high flow" statistics are not available. Thus "2005" data are used for gauge flows.

FLOW CALCULATIONS

SITE OF INTEREST	DRAINAGE AREA	CALCULATION	HARMEAN	HF30Q10	HF7Q10	HF1Q10	Z30Q5	Z30Q10	Z7Q10	Z1Q10	Z1Q30	UNIT
New River at Radford, Va.	2,748	A	2350	1660	1210	840	1140	1020	887	719	678	cfs
New River above discharge point	2,815	B = 2815/2748 x A	2407	1700	1240	860	1168	1045	909	737	695	cfs
New River above discharge point		C = 0.646 x B	1555	1099	801	556	754	675	587	476	449	MGD
high flow net withdrawal/discharge		D	-22.01	-22.01	-22.01	-22.01						MGD
low flow net withdrawal/discharge		D					-24.39	-24.39	-24.39	-24.39	-24.39	MGD
flow frequency at discharge point		E = C + D	1533	1076	779	534	730	651	563	451	424	MGD

HFMTHS	STATPERIOD	YRSTRN	NOTES
JAN-MAY	1940-2003	2005	Flow Regulated since 1939 by Claytor Reservoir

Mixing Zone Predictions for Lower Stroubles Creek WWTP - VA0060844

Effluent Flow = 9.0 MGD
Stream 7Q10 = 563 MGD
Stream 30Q10 = 651 MGD
Stream 1Q10 = 451 MGD
Stream slope = 0.001 ft/ft
Stream width = 350 ft
Bottom scale = 3
Channel scale = 1

Mixing Zone Predictions @ 7Q10

Depth = 2.9218 ft
Length = 47339.27 ft
Velocity = .8658 ft/sec
Residence Time = .6328 days

Recommendation:

A complete mix assumption is appropriate for this situation and the entire 7Q10 may be used.

Mixing Zone Predictions @ 30Q10

Depth = 3.1857 ft
Length = 44005.06 ft
Velocity = .9163 ft/sec
Residence Time = .5558 days

Recommendation:

A complete mix assumption is appropriate for this situation and the entire 30Q10 may be used.

Mixing Zone Predictions @ 1Q10

Depth = 2.5617 ft
Length = 52895.55 ft
Velocity = .7942 ft/sec
Residence Time = 18.5005 hours

Recommendation:

A complete mix assumption is appropriate for this situation providing no more than 5.41% of the 1Q10 is used.

Virginia DEQ Mixing Zone Analysis Version 2.1

Attachment B

- **Wastewater Schematics**
- **Facility Site Map**
- **Inspection Report**

File: V:\PROJECTS\BVA\21464\10729.03-VPDES\FIGURES\FIGURE 2.DWG Saved: 12/5/2013 2:56:00 PM Plotted: 12/5/2013 2:56:34 PM User: Hodge, Chris LastSavedBy: 3771

1. BAR SCREEN BUILDING
2. SCREW PUMPS & METERING
3. GRIT REMOVAL
4. PRIMARY SETTLING (2)
5. AERATION (3)
6. FINAL SETTLING (4)
7. NON-POTABLE WATER PUMPING
8. ULTRAVIOLET DISINFECTION (3)
9. PRIMARY SLUDGE PUMPING
10. ACTIVATED SLUDGE PUMPING
11. DISSOLVED AIR FLOTATION (1) & ROTARY DRUM THICKENER (1)
12. CENTRIFUGE (2)
13. INCINERATION
14. ASH PONDS

⊙ NORMALLY CLOSED VALVE

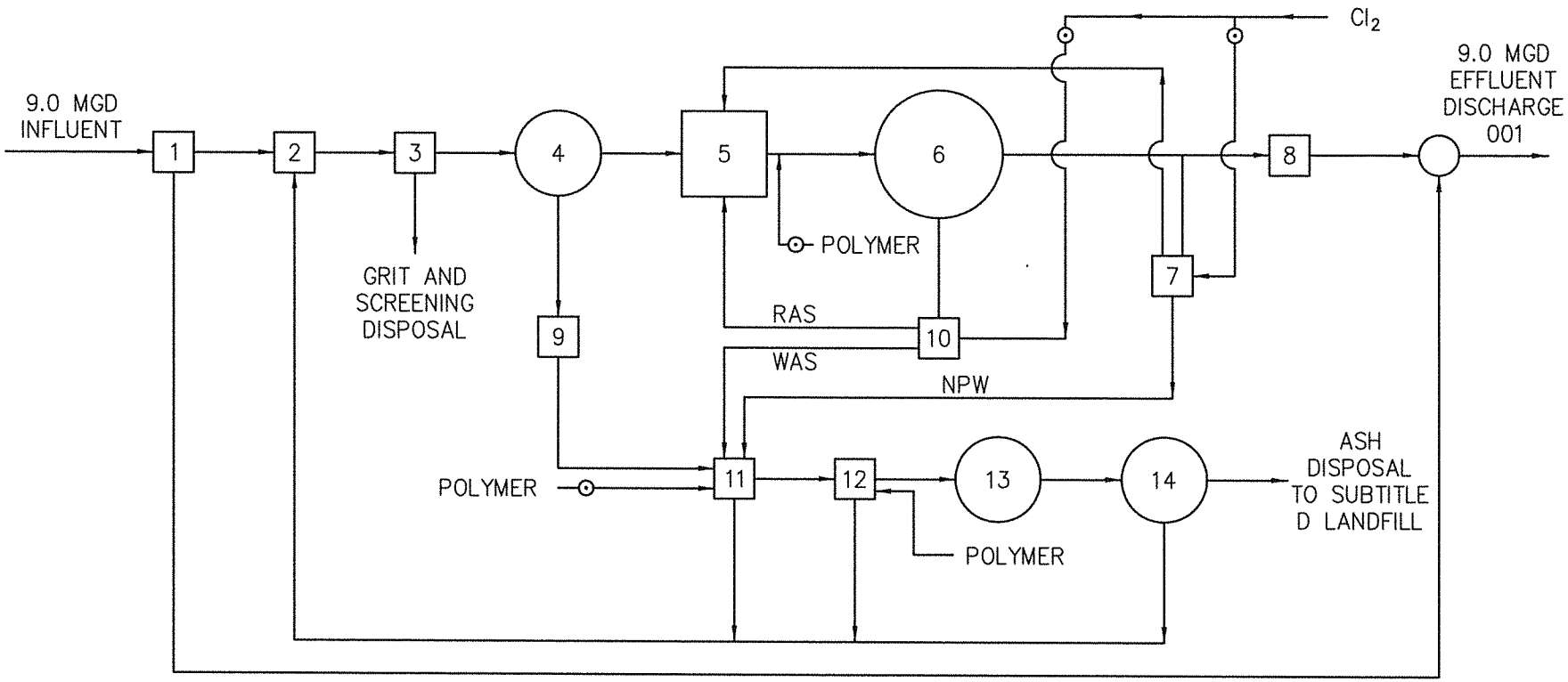

Drawing Copyright © 2013

CHA

1901 Innovation Drive, Suite 2100
Blacksburg, VA 24060
Main: (540) 552-5548 • www.chacompanies.com

BLACKSBURG – VPI SANITATION AUTHORITY
LOWER STROUBLES CREEK WASTEWATER TREATMENT PLANT
SCHEMATIC FLOW DIAGRAM

PROJECT NO. 21464

DATE: DEC 2013

FIGURE 2

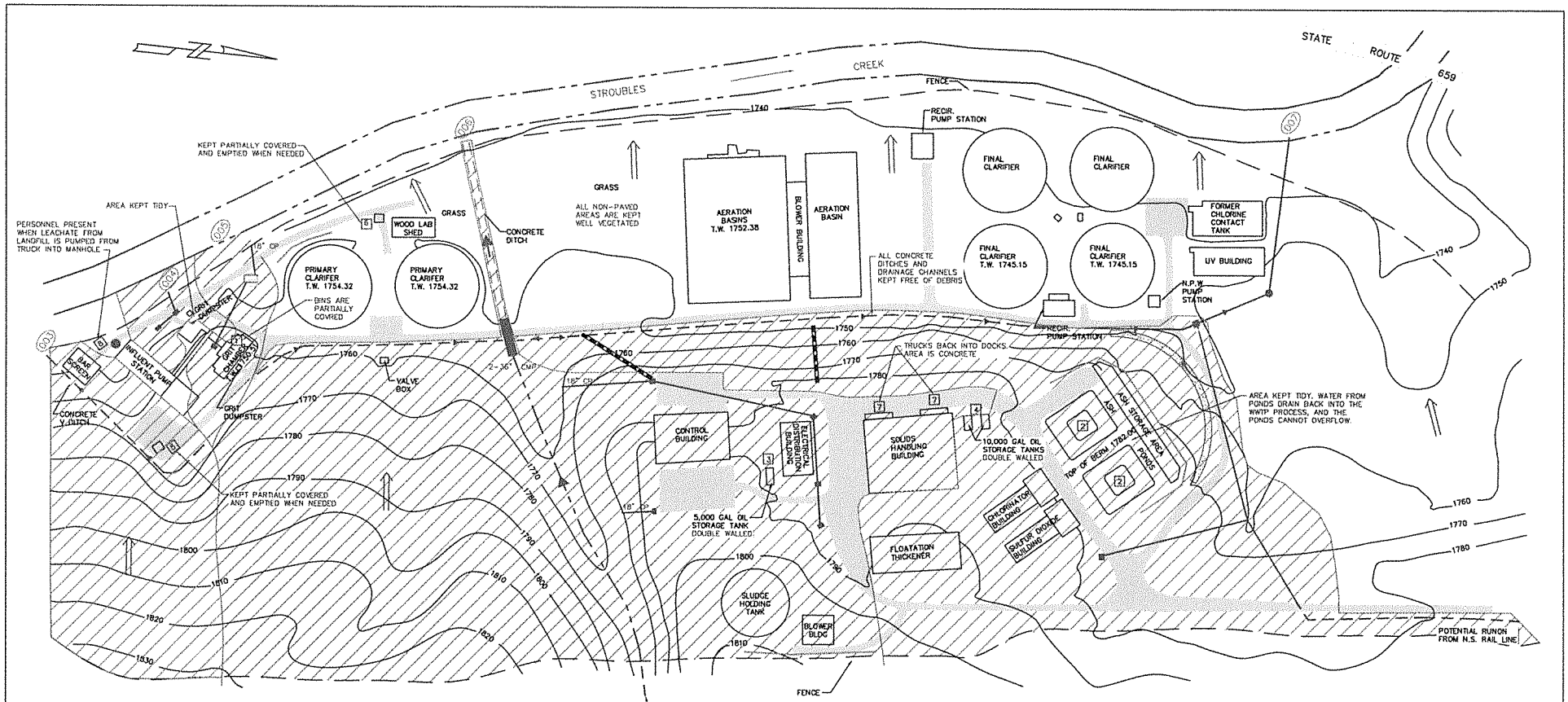

TOTAL PROPERTY SIZE = 93 ACRES
(INCLUDES AREAS NOT DEPICTED ON MAP)

AREA DEPICTED ON MAP = ~23 ACRES

POTENTIAL POLLUTANT SOURCES

1. GRIT SOLIDS HANDLING
2. ASH PONDS
3. 5,000 GALLON OIL TANK
4. 2-10,000 GALLON OIL TANKS
5. SPARE GRIT DUMPSTER
6. GARBAGE DUMPSTER
7. LOADING DOCKS
8. LEACHATE RECEIVING STATION

LEGEND

- DRAINAGE PIPE
- CONCRETE DITCH
- RIPRAP DITCH
- DROP INLET
- MANHOLE
- EXISTING CONTOURS
- FENCE LINE
- SHEET FLOW
- RETAINING WALL
- PAVED AREAS
- OUTFALL
- OUTFALL SAMPLING LOCATION
- DRAINAGE AREA BOUNDARY
- NATURAL DRAINAGE CHANNEL
- STAIRS
- OUTFALL 003 DRAINAGE AREA ~1.8 ACRES
- OUTFALL 004 DRAINAGE AREA ~0.2 ACRES
- OUTFALL 005 DRAINAGE AREA ~0.3 ACRES
- OUTFALL 006 DRAINAGE AREA ~5.6 ACRES
- OUTFALL 007 DRAINAGE AREA ~3.4 ACRES

BEST MANAGEMENT PRACTICES

CHA
1901 Innovation Drive, Suite 2100
Blacksburg, VA 24060
Main: (540) 552-5548 · www.chacompanies.com

Designed: KLA	Scale: NO SCALE	BLACKSBURG – VPI SANITATION AUTHORITY STROUBLES CREEK WASTEWATER TREATMENT PLANT	
Drawn: KJC	Job No.: 21464	FACILITY SITE MAP	
Checked: RLH	Date: 11/2013		

Rev.	Description	Date	By
4	VPDES PERMIT APPLICATION	NOV-13	ACM
3	SWPPP UPDATES	SEPT 09	RLH
2	VPDES PERMIT APPLICATION	SEPT-08	RLH
1	DEQ APPROVAL OF OUTFALL CONSOLIDATION	SEPT-03	KLA
0	STORMWATER POLLUTION PREVENTION PLAN	SEPT-02	RLH

Sheet No.: 1

File Name:

COMMONWEALTH of VIRGINIA

DEPARTMENT OF ENVIRONMENTAL QUALITY
Blue Ridge Regional Office
www.deq.virginia.gov

Doug W. Domenech
Secretary of Natural Resources

David K. Paylor
Director

Robert J. Weld
Regional Director

Lynchburg Office
7705 Timberlake Road
Lynchburg, Virginia 24502
(434) 582-5120
Fax (434) 582-5125

Roanoke Office
3019 Peters Creek Road
Roanoke, Virginia 24019
(540) 562-6700
Fax (540) 562-6725

Mr. Michael Vaught
Executive Director
Blacksburg – VPI Sanitation Authority
P.O. Drawer 52
Blacksburg, VA 24063

Re: Technical, Laboratory, and Storm Water Inspection Reports
Lower Stroubles Creek Wastewater Treatment Plant
VPDES Permit No. VA0060844

Dear Mr. Vaught:

Attached for your review are copies of the technical, laboratory, and storm water inspection reports for the Lower Stroubles Creek Wastewater Treatment Plant. I conducted the inspections on May 10, 2011.

With regard to the technical inspection, there are no recommendations for action at this time.

With regard to the laboratory inspection, no deficiencies were noted.

If you have any questions regarding these reports, please contact me at the Blue Ridge Regional Office, Roanoke (540) 562-6829).

Sincerely,

Gerald A. Duff
Compliance Inspector Senior

Attachments

Copies: S. C. Hale, file - DEQ/BRRO, Roanoke

Facility: **Blacksburg-VPI SA Lower Stroubles Creek WWTP** VPDES NO. **VA0060844**
County/Town: **Montgomery County**

DEPARTMENT OF ENVIRONMENTAL QUALITY – BLUE RIDGE REGIONAL OFFICE, ROANOKE
WASTEWATER FACILITY
INSPECTION REPORT
PART I

Inspection date:	**05/10/2011**	Date form completed:	**06/01/2011**	Inspection scheduled:	**Y** N
Inspection by:	**Gerald A. Duff**	Inspection agency:	**DEQ/BRRO-R**	Inspection announced:	Y **N**
Time spent:	**30 hours with travel**				
Reviewed by:	**S. C. Hale**				
Present at inspection:	**Bobby Epperly**				

TYPE OF FACILITY:

[ ] Federal	[X] Domestic	[X] Major	[ ] Primary
[X] Nonfederal	[ ] Industrial	[ ] Minor	[X] Secondary

TYPE OF INSPECTION:

[X] Routine
[ ] Compliance/Assistance/Complaint
[ ] Reinspection

Date of last inspection: **01/12/2004**
Agency: **DEQ/WCRO**

Population served: **~ 70,000** Connections served: **Unknown**

Last month average: (Influent) **March 2011**	BOD: **145** *mg/L*	TSS: **128** *mg/L*	Flow: **7.079** MGD	
	Other: Temperature: **56** *°F*, Settleable Solids: **5.3** *mg/L*			
Last month average: (Effluent) **March 2011**	BOD: **1.2** *mg/L*	TSS: **2.8** *mg/L*	Flow: **6.305** MGD	
	Other: pH: **6.8 – 7.4** *SU*, D.O. Min: **9.0** *mg/L*, TRC Cont.: **2.46** *mg/L*, TRC: **0.0004** *mg/L*			
Quarter average: (Effluent) **Jan. – Mar. 2011**	BOD: **1.3** *mg/L*	TSS: **3.5** *mg/L*	Flow: **5.258** MGD	
	Other: pH: **6.8 – 7.4** *SU*, D.O. Min: **9.2** *mg/L*, TRC Cont.: **2.50** *mg/L*, TRC: **0.001** *mg/L*			

DATA VERIFIED IN PREFACE	[ ] Updated	[X] No changes	
Has there been any new construction?	[ ] Yes	[X] No	
If yes, were plans and specifications approved?	[ ] Yes	[ ] No	[X] NA

DEQ approval date: **NA**

(A) PLANT OPERATION AND MAINTENANCE

1. Class and number of certified operators: I - **8**, II - **1**, III - **3**, Laboratory Supervisor - **1**
2. Hours per day plant is manned: **24 hours/day, 7 days/week**
3. Describe adequacy of staffing. [X] Good [ ] Average [ ] Poor
4. Does the plant have an established program for training personnel? [X] Yes [ ] No
5. Describe the adequacy of the training program. [X] Good [ ] Average [ ] Poor
6. Are preventive maintenance tasks scheduled? [X] Yes [ ] No
7. Describe the adequacy of maintenance. [X] Good [ ] Average [ ] Poor
8. Does the plant experience any organic/hydraulic overloading? [X] Yes [ ] No
   If yes, identify cause and impact on plant: **NA**
9. Any bypassing since last inspection? [ ] Yes [X] No
10. Is the standby electric generator operational? [X] Yes [ ] No [X] NA
11. Is the STP alarm system operational? [X] Yes [ ] No [ ] NA
12. How often is the standby generator exercised? **Twice/month***
    Power Transfer Switch? **Once/month** Alarm System? **Weekly**
13. When were the cross connection control devices last tested on the potable water services? **05/16-17/2011**
14. Is sludge being disposed in accordance with the approved sludge disposal plan? [X] Yes* [ ] No
15. Is septage received by the facility? [ ] Yes [X] No
    Is septage loading controlled? [ ] Yes [ ] No [X] NA
    Are records maintained? [ ] Yes [ ] No [X] NA
16. Overall appearance of facility: [X] Good [ ] Average [ ] Poor

Comments: **12. The facility has two generators, each capable of independently maintaining plant operational units. Each generator is exercised on-line (with a full load) once per month.**

14. Fly ash is disposed at the Montgomery County Landfill.

* Responses with this symbol should be of particular concern and the investigator may want to address the problem in more detail in the Comments Section.

(B) PLANT RECORDS

1. Which of the following records does the plant maintain?

Operational Logs for each unit process	[X] Yes	[ ] No	[ ] NA
Instrument maintenance and calibration	[X] Yes	[ ] No	[ ] NA
Mechanical equipment maintenance	[X] Yes	[ ] No	[ ] NA
Industrial waste contribution (Municipal Facilities)	[X] Yes	[ ] No	[ ] NA

2. What does the operational log contain?

[X] Visual observations
[X] Laboratory results
[X] Control calculations
[X] Flow measurement
[X] Process adjustments
[X] Other (specify) – **See below**

Comments: **Ambient air temperatures and rainfall records are maintained.**

3. What do the mechanical equipment records contain?

[X] As built plans and specs
[X] Manufacturers instructions
[X] Lubrication schedules
[X] Spare parts inventory
[X] Equipment/parts suppliers
[ ] Other (specify)

Comments:

4. What do the industrial waste contribution records contain (Municipal Only)?

[X] Waste characteristics
[ ] Impact on plant
[X] Locations and discharge types
[ ] Other (specify)

Comments:

5. Which of the following records are kept at the plant and available to personnel?

[X] Equipment maintenance records
[X] Industrial contributor records
[X] Sampling and testing records
[X] Operational Log
[X] Instrumentation records

6. Records not normally available to plant personnel and their location: **None**

7. Were the records reviewed during the inspection? [X] Yes* [ ] No

8. Are the records adequate and the O & M Manual current? [X] Yes* [ ] No

9. Are the records maintained for the required 3-year time period? [X] Yes [ ] No

Comments:

7. **Daily operational logs and laboratory records were reviewed in depth subsequent to the inspection.**

8. **The O&M manual was revised on 09/21/2005 and attested to be accurate on 09/12/2009.**

(C) SAMPLING

1. Do sampling locations appear to be capable of providing representative samples? [X] Yes [ ] No
2. Do sample types correspond to those required by the VPDES permit? [X] Yes [ ] No
3. Do sampling frequencies correspond to those required by the VPDES permit? [X] Yes [ ] No
4. Are composite samples collected in proportion to flow? [X] Yes [ ] No [ ] NA
5. Are composite samples refrigerated during collection? [X] Yes [ ] No [ ] NA
6. Does plant maintain required records of sampling? [X] Yes [ ] No
7. Does plant run operational control tests? [X] Yes* [ ] No

Comments: **7. Operational control testing includes pH, Temperature, D.O., MLSS, MLVSS, Settleable Solids, SDI, SVI, and Alkalinity.**

(D) TESTING

1. Who performs the testing? [X] Plant [ ] Central Lab [ ] Commercial Lab

   Name:

If plant performs any testing, complete 2-4.

2. What method is used for chlorine analysis? **Hach Method #8167 for the chlorine contact tank and S.M., 18th Ed., #4500-Cl C for after dechlorination.**
3. Does plant appear to have sufficient equipment to perform required tests? [X] Yes [ ] No
4. Does testing equipment appear to be clean and/or operable? [X] Yes [ ] No

Comments:

(E) FOR INDUSTRIAL FACILITIES WITH TECHNOLOGY BASED LIMITS ONLY NA

1. Is the production process as described in the permit application? (If no, describe changes in comments)
   [ ] Yes [ ] No [ ] NA
2. Do products and production rates correspond as provided in the permit application? (If no, list differences)
   [ ] Yes [ ] No [ ] NA
3. Has the State been notified of the changes and their impact on plant effluent? Date:
   [ ] Yes [ ] No* [ ] NA

Comments:

Problems identified at last inspection:

There were no recommendations for action identified during the previous inspection.

SUMMARY

Recommendations for action:

There are no recommendations for action at this time.

VPDES # VA0060844

DEPARTMENT OF ENVIRONMENTAL QUALITY – BLUE RIDGE REGIONAL OFFICE, ROANOKE
WASTEWATER FACILITY
INSPECTION REPORT
PART II

Unit Process Evaluation Summary Sheet

UNIT PROCESS	APPLICABLE	COMMENTS
SEWAGE PUMPING	X	
FLOW MEASUREMENT	X	
SCREENING/COMMINUTION	X	
GRIT REMOVAL	X	
FLOW EQUALIZATION		
PRE-AERATION		
FINE SCREENING		
OIL/WATER SEPARATOR		
PRIMARY SEDIMENTATION	X	
ACTIVATED SLUDGE AERATION	X	
TRICKLING FILTERS		
ROTATING BIOLOGICAL CONTACTORS		
SEPTIC TANK/SAND FILTER		
SECONDARY SEDIMENTATION	X	
RAPID MIX/FLOCCULATION		
TERTIARY SEDIMENTATION		
FILTRATION		
MICRO-SCREENING		
ACTIVATED CARBON ADSORPTION		
CHLORINATION	X	
NON-POTABLE WATER PUMPING	X	
DECHLORINATION	X	
OZONATION		
ULTRAVIOLET DISINFECTION		
POST AERATION	X	
LAND APPLICATION-EFFLUENT		
EFFLUENT/PLANT OUTFALL	X	**The outfall was not visited due to its remote location on RAAP property.**
SLUDGE PUMPING	X	
FLOTATION THICKENING (DAF)	X	
GRAVITY THICKENING		
SLUDGE HOLDING	X	
ANAEROBIC DIGESTION		
AEROBIC DIGESTION		
CENTRIFUGATION	X	
PRESSURE FILTRATION (SLUDGE)		
VACUUM FILTRATION		
DRYING BEDS		
FLY ASH PONDS	X	
INCINERATION	X	
COMPOSTING		
LAND APPLICATION-SLUDGE		

REFER TO INDIVIDUAL UNIT PROCESS EVALUATION FORMS REGARDING THE STANDARD COMMENTS

1. UNIT NEEDS ATTENTION
2. ABNORMAL INFLUENT/EFFLUENT
3. EVIDENCE OF EQUIPMENT FAILURE
4. UNAPPROVED MODIFICATION OR TEMPORARY REPAIR
5. EVIDENCE OF PROCESS UPSET

Attachment C

- **2012 Impaired Waters Report (excerpt)**
- **Receiving Stream Data – Station 9-NEW081.72**

2012 Impaired Waters

Categories 4 and 5 by DCR Watershed*

New River Basin

Fact Sheet prepared for DCR Watershed: N22*

Cause Group Code: **N29R-01-PCB** **New River, Claytor Lake, Peak Creek, Reed Creek and Stony Creek**

Location: The impairment begins at the I-77 bridge crossing the New River and extends downstream to the VA/WVA State Line and includes the tributaries Peak Creek and Reed Creek as described below.

City / County: Giles Co. Montgomery Co. Pulaski Co. Radford City

Use(s): Fish Consumption

Cause(s) / VA Category: PCB in Fish Tissue/ 5A

The Virginia Department of Health (VDH) issued a fish consumption advisory on August 6, 2001 for polychlorinated biphenyls (PCBs) for the lower portion of the New River (Rt. 114 Bridge downstream to the VA / WVA State Line - 52.0 miles) based on fish tissue collections from Carp. An Advisory extension to Claytor dam was issued 8/06/2003 (11.47 miles) recommends that no carp be consumed in these waters and no more than two meals per month of flathead and channel catfish. The VDH PCB Fish Consumption Advisory was further extended upstream on the New River (13 miles) to the I-77 Bridge to include the lower portions of Peak Creek (4.02 miles), Reed Creek (16.35 miles) and Claytor Lake (4,287 acres) on 12/02/2004. The VDH advises consumption should not exceed two meals per month for carp and smallmouth bass. The VDH level of concern is 50 parts per billion (ppb) in fish tissue.

There are eight fish tissue collection sites within the 2010 data window reporting exceedances of the WQS based 20 ppb fish tissue value (TV) (VDH 50 ppb). These data are reviewed by the VDH in making an advisory determination. A complete listing of collection sites and associated fish tissue data are available at http://www.deq.virginia.gov/fishtissue/fishtissue.html. A more detailed presentation of the data can also be found using an interactive mapping application at http://gisweb.deq.state.va.us/. The VDH Advisory information is also available via the web at http://www.vdh.virginia.gov/Epidemiology/PublicHealthToxicology/Advisories/.

9-SNC000.20- 2004 fish tissue finds with application of the new WQS TV for PCB (20 ppb) the addition of 3 species exceeding the new TV criterion. Rock Bass (size 16-20 cm) at 25.21, SM Bass (size 28.6-30.5 cm) at 22.13 and White sucker (1 fish) at 30.08 ppb. Stony Creek is therefore a 2010 addition based on the new WQS PCB tissue value of 20 ppb.

Assessment Unit / Water Name / Description	Cause Category / Name		Nested	Cycle First Listed	TMDL Schedule or EPA Approval	Size
VAW-N22R_NEW01A00 / New River / The New River mainstem from the confluence of Back Creek downstream to the Watershed Boundary at the Montgomery / Giles County Line.	5A	PCB in Fish Tissue		2002	2014	3.47
VAW-N22R_NEW02A00 / New River / New River mainstem from the Radford Army Arsenal Plant downstream intake near Whitethorne downstream to the confluence of Back Creek.	5A	PCB in Fish Tissue		2002	2014	2.88
VAW-N22R_NEW03A00 / New River / New River mainstem from the confluence of Stroubles Creek downstream to the Radford Army Arsenal Plant downstream water intake near Whitethorne.	5A	PCB in Fish Tissue		2002	2014	4.52
VAW-N22R_NEW04A00 / New River / New River mainstem from the Radford Army Arsenal Plant upstream intake/Pepper's Ferry Region POTW outfall downstream to the confluence of Stroubles Creek.	5A	PCB in Fish Tissue		2002	2014	2.35

2012 Impaired Waters

Categories 4 and 5 by DCR Watershed*

VIRGINIA DEPARTMENT OF ENVIRONMENTAL QUALITY

New River Basin

Fact Sheet prepared for DCR Watershed: N22*

Assessment Unit / Water Name / Description	Cause	Category / Name	Nested	Cycle First Listed	TMDL Schedule or EPA Approval	Size
VAW-N22R_NEW05A00 / New River / New River mainstem from the Blacksburg /Christiansburg /VPI Authority intake at Rt. 114 downstream to the Radford Army Arsenal Plant upstream intake / Pepper's Ferry Regional POTW outfall.	5A	PCB in Fish Tissue		2002	2014	1.77
VAW-N22R_NEW06A00 / New River / New River mainstem from the Watershed Boundary at the Crab Creek confluence downstream to the Blacksburg /Christiansburg /VPI Authority intake.	5A	PCB in Fish Tissue		2006	2018	1.73

New River, Claytor Lake, Peak Creek, Reed Creek and Stony Creek

DCR Watershed: N22*

Fish Consumption

	Estuary (Sq. Miles)	Reservoir (Acres)	River (Miles)
PCB in Fish Tissue - Total Impaired Size by Water Type:			**16.72**

Sources:

Source Unknown

*Header Information: Location, City/County, Cause/VA Category and Narratives; describe the entire extent of the Impairment. Sizes presented are for Assessment Units (AUs) lying within the DCR Watershed boundary noted above.

Lower Stroubles Creek WWTP - VA0060844
STORET DATA

Water Shed Code	Station ID	Depth
VAW-N18R	9-NEW081.7	0.3

Collection Date Time	NITROGEN, AMMONIA, TOTAL (MG/L AS N)	NITRATE NITROGEN, TOTAL (MG/L AS N)	HARDNESS, TOTAL (MG/L AS CACO3)
06/22/1989 11:20			58.000
06/22/1989 11:25	.070	.840	
06/05/1990 12:00			98.000
07/09/1990 12:30			78.000
08/02/1990 10:30	.000	.720	66.000
09/12/1990 10:30	.040	.520	68.000
10/04/1990 11:15	.000	.720	84.000
11/06/1990 10:20	.000	1.340	114.000
12/04/1990 11:15	.000	.700	58.000
06/04/1991 10:50	.000	1.000	72.000
08/13/1991 10:45	.050	.430	54.000
09/09/1991 10:20			54.000
10/02/1991 10:00	.050	.490	76.000
11/06/1991 10:25	.000	.400	60.000
12/04/1991 10:20	.060	.380	56.000
06/04/1992 09:45	.000	.840	68.000
07/06/1992 10:50	.040	1.130	94.000
08/10/1992 09:15	.000	.970	78.000
09/02/1992 09:15	.000	.710	78.000
10/01/1992 09:45	.040	.590	76.000
11/03/1992 09:35	.100	.480	58.000
12/02/1992 09:15	.040	.710	49.000
06/07/1993 10:00	.000	1.160	98.000
07/07/1993 09:15	.050	.840	78.000
08/02/1993 09:45	.000	.650	76.000
09/01/1993 09:35	.000	.660	72.000
10/12/1993 09:20	.040	.760	90.000
11/01/1993 09:20	.000	.670	74.000
12/02/1993 13:15	.100	.530	72.000
06/07/1994 10:00	.000	1.050	97.000
07/07/1994 10:00	.040	.710	70.000
08/04/1994 09:35	.040	.750	70.000
09/28/1994 10:30	.050	.700	62.000
10/11/1994 10:00	.000	.530	57.000
11/03/1994 09:50	.040	.360	46.000
12/07/1994 10:05	.040	.390	46.000
12/21/1994 10:30	.050	.350	40.000
06/21/1995 09:35	.000	1.250	96.000
07/13/1995 08:45			88.000
08/09/1995 08:50	.050	.560	61.000
09/13/1995 09:25	.040	.550	66.000
10/11/1995 08:25	.090	.680	62.000
11/13/1995 09:30	.070	.530	54.000
12/04/1995 09:10	.000	.510	45.000

Collection Date Time	NITROGEN, AMMONIA, TOTAL (MG/L AS N)	NITRATE NITROGEN, TOTAL (MG/L AS N)	HARDNES S, TOTAL (MG/L AS CACO3)
06/12/1996 10:00	.050	.550	36.000
07/16/1996 10:10	.040	.750	64.000
08/19/1996 09:35	.110	.900	66.000
09/19/1996 09:30	.000	1.210	90.000
10/15/1996 09:05	.000	.960	85.000
11/13/1996 12:00	.000	.780	50.000
12/18/1996 09:10	.050	1.200	74.000
06/11/1997 09:00	.000	.820	64.200
07/09/1997 10:10	.000	.880	59.300
08/25/1997 09:20	.000	.200	64.100
09/25/1997 08:45	.000	.480	50.400
10/20/1997 10:10	.000	.470	67.800
11/04/1997 12:15	.150	.340	57.300
12/02/1997 09:00	.000	.640	74.000
06/04/1998 08:10	.000	1.060	78.200
07/28/1998 09:30	.000	.740	68.700
08/12/1998 11:00	.000	.940	83.300
09/01/1998 09:35	.000	.580	59.500
10/20/1998 09:30	.000	.760	92.000
11/17/1998 09:15	.090	.580	65.000
12/08/1998 09:30	.000	.490	62.000
06/22/1999 08:40	.040	.850	78.000
07/26/1999 09:30	.000	.720	77.000
08/17/1999 09:25	.000	.560	69.600
09/21/1999 09:25	.000	.390	59.300
10/13/1999 08:31	.000	.550	75.200
11/16/1999 09:10	.000	.550	69.600
12/14/1999 09:30	.100	.470	54.200
06/26/2000 09:35	.000	.550	62.000
07/26/2000 09:40	.000	.810	72.600
08/16/2000 13:35	.000	.640	72.400
09/19/2000 09:00	.000	.720	75.900
10/18/2000 10:00	.000	.590	83.400
11/29/2000 10:30	.050	.530	63.300
12/27/2000 13:00	.000	.450	65.400
06/25/2001 08:30	.000	1.310	114.000
07/17/2001 10:30	.000	.850	52.100
08/15/2001 12:50	.000	1.050	68.900
09/11/2001 09:30	.000	.720	57.600
10/25/2001 13:50	.000	.670	40.100
11/27/2001 12:00	.160	1.650	163.300
12/18/2001 13:30	.000	.620	44.500
06/25/2002 08:30	.000	.670	79.200
07/30/2002 10:50	.000	.470	74.500

Collection Date Time	NITROGEN, AMMONIA, TOTAL (MG/L AS N)	NITRATE NITROGEN, TOTAL (MG/L AS N)	HARDNESS, TOTAL (MG/L AS CACO3)
08/20/2002 09:30	.060	.350	62.100
09/19/2002 09:45	.050	.510	101.000
10/31/2002 09:20	.050	.560	68.700
11/20/2002 12:30	.050	1.560	106.000
12/12/2002 14:15	.000	1.020	69.100
06/12/2003 09:00	.000	1.340	103.000
08/10/2005 10:00	.000		
10/27/2005 09:40	.000		
12/19/2005 10:45	.040		
06/08/2006 09:50	.130		
08/14/2006 10:45	.000		
10/05/2006 09:30	.000		
12/14/2006 09:30	.040		
02/08/1989 11:40			60.000
03/21/1989 11:10			56.000
03/21/1989 11:15	.080	.810	
04/18/1989 12:15			60.000
04/18/1989 12:20	.000	.740	
05/16/1989 13:45			72.000
05/16/1989 13:50	.000	.870	
01/28/1991 11:15	.040	.980	62.000
02/07/1991 10:10			68.000
03/12/1991 11:00	.000	.690	56.000
04/08/1991 10:45	.050	1.040	74.000
05/06/1991 10:40	.050	.830	68.000
01/08/1992 10:05	.060	.760	52.000
02/06/1992 11:00	.000	.880	
04/09/1992 09:00	.000	.820	62.000
05/11/1992 10:10	.080	.920	60.000
01/06/1993 09:30	.080	.880	54.000
02/03/1993 12:45	.050	.980	60.000
03/02/1993 12:20	.000	.980	60.000
04/06/1993 09:30	.060	1.290	82.000
05/04/1993 09:45	.000	1.050	80.000
01/26/1994 10:10	.050	1.180	82.000
02/03/1994 09:15	.050	1.400	118.000
03/28/1994 09:10	.050	2.170	176.000
04/07/1994 09:20	.070	1.460	101.000
05/03/1994 09:15	.000	1.350	93.000
01/24/1995 09:30	.160	.940	45.000
02/27/1995 09:55	.060	1.020	65.000
03/29/1995 10:35	.000	1.200	84.000
04/20/1995 08:25			88.000
05/24/1995 08:20	.000	.850	73.000

Collection Date Time	NITROGEN, AMMONIA, TOTAL (MG/L AS N)	NITRATE NITROGEN, TOTAL (MG/L AS N)	HARDNESS, TOTAL (MG/L AS CACO3)
01/04/1996 09:00	.000	.610	50.000
02/22/1996 08:05	.040	1.500	86.000
03/14/1996 09:45	.000	1.140	82.000
04/15/1996 08:05	.000	1.100	86.000
05/14/1996 11:00	.060	.480	36.000
01/22/1997 08:30	.000	.950	57.700
02/12/1997 09:45	.200	1.160	77.200
03/25/1997 08:40	.000	1.170	84.600
04/16/1997 09:55	.060	1.180	86.800
05/28/1997 08:25	.000	.610	48.200
01/22/1998 08:30	.080	.760	62.400
02/12/1998 09:00	.040	1.370	91.000
03/19/1998 08:15	.000	1.330	102.000
04/15/1998 08:50	.000	1.220	81.000
05/11/1998 10:00	.000	1.570	128.000
01/28/1999 08:15	.000	.870	154.000
02/10/1999 08:10	.050	.960	76.000
03/30/1999 09:05	.000	.870	60.000
04/26/1999 08:50	.000	.960	126.000
05/10/1999 08:20	.000	.750	62.000
01/26/2000 09:15	.000	1.880	65.100
02/14/2000 09:00	.000	.750	60.900
03/29/2000 12:00	.000	.910	61.000
04/06/2000 09:15	.000	.930	59.000
05/24/2000 09:05	.000	1.050	92.000
01/17/2001 11:30	.000	.690	75.300
02/06/2001 11:00	.000	1.720	155.000
03/08/2001 10:00	.000	.620	28.100
04/10/2001 10:15	.050	.980	73.400
05/17/2001 09:00	.000	1.280	112.000
01/23/2002 10:05	.000	.470	67.800
02/25/2002 14:00	.000	.880	47.000
03/18/2002 13:00	.040	1.250	109.000
04/30/2002 10:30	.000	.960	81.200
05/30/2002 09:15	.000	.830	89.300
01/22/2003 14:15	.000	1.370	93.800
02/11/2003 08:55	.000	1.080	73.400
03/10/2003 12:30	.050	1.660	91.400
04/10/2003 09:30	.000	2.110	178.000
02/21/2006 10:00	.000		
04/06/2006 09:00	.000		
Average	0.025	0.865	74.7

Water Shed Code	Station	Depth
VAW-N18R	9-NEW	0.3

Lower Stroubles Creek WWTP - VA0060844
STORET DATA - Temperature and pH

Collection Date Time	Hi-Flow Month	Temp Celcius	Field Ph
06/22/1989 11:20	0	20.9	8.4
06/05/1990 12:00	0	17.9	7.8
07/09/1990 12:30	0	28.2	8.1
08/02/1990 10:30	0	21.9	8.2
09/12/1990 10:30	0	22.9	7.9
10/04/1990 11:15	0	19.3	8
11/06/1990 10:20	0	11.7	8.6
12/04/1990 11:15	0	8.5	8.8
06/04/1991 10:50	0	20.3	8.2
08/13/1991 10:45	0	23.3	8
09/09/1991 10:20	0	21.8	7.65
10/02/1991 10:00	0	18.4	8
11/06/1991 10:25	0	12.1	8.3
12/04/1991 10:20	0	9.9	8.5
06/04/1992 09:45	0	15.6	8.2
07/06/1992 10:50	0	20.1	8.2
08/10/1992 09:15	0	22.3	7.7
09/02/1992 09:15	0	21	7.6
10/01/1992 09:45	0	17.6	7.9
11/03/1992 09:35	0	14.2	7.6
12/02/1992 09:15	0	8.4	8.5
06/07/1993 10:00	0	17.4	8.1
07/07/1993 09:15	0	21.5	7.7
08/02/1993 09:45	0	22.5	7.5
09/01/1993 09:35	0	23.6	7.6
10/12/1993 09:20	0	16	7.9
11/01/1993 09:20	0	13.4	8.3
12/02/1993 13:15	0	9.7	7.9
06/07/1994 10:00	0	18.4	7.7
07/07/1994 10:00	0	22.1	7.74
08/04/1994 09:35	0	23	7.6
09/28/1994 10:30	0	19	7.98
10/11/1994 10:00	0	17	7.83
11/03/1994 09:50	0	13.4	7.91
12/07/1994 10:05	0	9.9	8.1
12/21/1994 10:30	0	6.4	9
06/21/1995 09:35	0	19	7.95
07/13/1995 08:45	0	20	7.71
08/09/1995 08:50	0	22.7	7.36
09/13/1995 09:25	0	22.6	7.56
10/11/1995 08:25	0	17.5	7.85
11/13/1995 09:30	0	10.8	8.25
12/04/1995 09:10	0	8.1	8.22
06/12/1996 10:00	0	20.4	8.11
07/16/1996 10:10	0	23.1	7.91
08/19/1996 09:35	0	19.9	7.86

Collection Date Time	Hi-Flow Month	Temp Celcius	Field Ph
09/19/1996 09:30	0	18.5	8.19
10/15/1996 09:05	0	15	8.25
11/13/1996 12:00	0	10.9	8.15
12/18/1996 09:10	0	6.8	8.23
06/11/1997 09:00	0	15.5	7.93
08/25/1997 09:20	0	21.7	7.49
09/25/1997 08:45	0	19.2	7.56
10/20/1997 10:10	0	15.6	8.22
11/04/1997 12:15	0	13.9	7.77
12/02/1997 09:00	0	7	7.81
06/04/1998 08:10	0	19	7.84
07/28/1998 09:30	0	23.4	7.78
08/12/1998 11:00	0	23.4	7.79
09/01/1998 09:35	0	23.3	7.73
10/20/1998 09:30	0	17.1	7.98
11/17/1998 09:15	0	12.8	7.78
12/08/1998 09:30	0	12.4	7.38
06/22/1999 08:40	0	18.5	7.92
07/26/1999 09:30	0	22.5	7.9
08/17/1999 09:25	0	23	7.71
09/21/1999 09:25	0	19.1	7.9
10/13/1999 08:31	0	16.9	7.84
11/16/1999 09:10	0	9	7.51
06/26/2000 09:35	0	20.9	7.68
07/26/2000 09:40	0	20.6	7.55
08/16/2000 13:35	0	23.7	7.63
09/19/2000 09:00	0	19.1	7.49
10/18/2000 10:00	0	16.2	7.71
11/29/2000 10:30	0	8.5	8.01
12/27/2000 13:00	0	6.5	8.3
06/25/2001 08:30	0	17.3	7.27
07/17/2001 10:30	0	21.8	8.1
08/15/2001 12:50	0	22.1	7.61
09/11/2001 09:30	0	21.4	7.72
10/25/2001 13:50	0	17.5	8.33
12/18/2001 13:30	0	10.6	8.48
06/25/2002 08:30	0	19.79	7.28
07/30/2002 10:50	0	23.08	7.23
08/20/2002 09:30	0	22.9	7.23
09/19/2002 09:45	0	21.75	7.61
10/31/2002 09:20	0	13.2	7.13
11/20/2002 12:30	0	10.55	7.6
12/12/2002 14:15	0	7.02	7.64
06/12/2003 09:00	0	17.26	7.79
08/19/2003 10:05	0	22.46	7.37
10/27/2003 13:00	0	14.41	7.72

Collection Date Time	Hi-Flow Month	Temp Celcius	Field Ph
12/22/2003 10:30	0	8.2	7.6
06/22/2004 09:30	0	20.9	7.47
08/25/2004 12:30	0	23.3	7.63
10/27/2004 09:45	0	14.3	7.1
12/01/2004 10:30	0	11.11	7.45
06/07/2005 10:00	0	17.7	7.8
08/10/2005 10:00	0	24	7.2
10/27/2005 09:40	0	13.1	7.8
12/19/2005 10:45	0	5.4	7.5
06/08/2006 09:50	0	17.6	7
08/14/2006 10:45	0	23.2	7.6
10/05/2006 09:30	0	18.9	7.2
12/14/2006 09:30	0	6.2	8.2
07/17/2007 12:15	0	23.1	7.7
09/27/2007 10:00	0	22.2	8.2
11/29/2007 10:30	0	9.7	8.1
07/02/2008 13:15	0	21.1	7.5
09/10/2008 14:20	0	21.5	8.2
11/19/2008 12:30	0	9.6	8.3
07/21/2009 15:00	0	21.6	8.5
09/21/2009 12:20	0	20.8	8.2
11/17/2009 15:00	0	11.6	8.1
07/20/2010 15:10	0	24.6	8
09/02/2010 14:35	0	26.1	8
10/25/2010 09:15	0	16.2	7.3
11/18/2010 13:50	0	12	8.2
07/19/2011 09:45	0	23.4	7.8
09/15/2011 11:15	0	20.5	8.5
11/29/2011 11:00	0	10.2	8.2
06/19/2012 10:30	0	21	7.8
08/22/2012 11:10	0	21.9	7.9
10/17/2012 11:30	0	14.3	8.3
12/12/2012 11:10	0	6.6	7.3
07/11/2013 09:50	0	21.19	7.37
07/30/2013 14:10	0	21.5	7.5
09/18/2013 11:30	0	20.1	7.7
11/18/2013 13:25	0	12.4	7.9
12/02/2013 12:00	0	7.4	7.5
02/08/1989 11:40	1	5.1	8.8
03/21/1989 11:10	1	6.7	8.6
04/18/1989 12:15	1	13	8.2
05/16/1989 13:45	1	14	8.3
01/28/1991 11:15	1	6	8.8
02/07/1991 10:10	1	6.3	8.5
03/12/1991 11:00	1	6.7	7.3
04/08/1991 10:45	1	12.9	8.3

Collection Date Time	Hi-Flow Month	Temp Celcius	Field Ph
05/06/1991 10:40	1	16.1	8.2
01/08/1992 10:05	1	5.8	8.5
04/09/1992 09:00	1	7.7	8.6
05/11/1992 10:10	1	13.5	8.3
01/06/1993 09:30	1	5.7	8
02/03/1993 12:45	1	5.8	8
03/02/1993 12:20	1	5.3	8.2
04/06/1993 09:30	1	8.9	8
05/04/1993 09:45	1	12.8	8.1
01/26/1994 10:10	1	3.9	8.3
02/03/1994 09:15	1	3.3	8.4
03/28/1994 09:10	1	11.3	7.9
04/07/1994 09:20	1	9.5	8.1
05/03/1994 09:15	1	14.2	8
01/24/1995 09:30	1	7.2	8.36
02/27/1995 09:55	1	4.4	8.5
03/29/1995 10:35	1	11.3	8.51
04/20/1995 08:25	1	12.4	7.93
05/24/1995 08:20	1	15.8	7.72
01/04/1996 09:00	1	3.1	8.71
02/22/1996 08:05	1	6.1	8.1
03/14/1996 09:45	1	6.5	8.52
04/15/1996 08:05	1	10.6	8.35
05/14/1996 11:00	1	15	7.7
01/22/1997 08:30	1	3.8	8.36
02/12/1997 09:45	1	4.2	8.42
03/25/1997 08:40	1	9.8	8.17
04/16/1997 09:55	1	11.9	8.28
05/28/1997 08:25	1	15.4	8.01
01/22/1998 08:30	1	6	7.65
02/12/1998 09:00	1	5.5	8.23
03/19/1998 08:15	1	7.9	8
04/15/1998 08:50	1	12.4	7.71
05/11/1998 10:00	1	14.1	8.04
01/28/1999 08:15	1	6.4	7.89
02/10/1999 08:10	1	6.3	8.16
03/30/1999 09:05	1	8.1	8.51
04/26/1999 08:50	1	12.5	8.18
05/10/1999 08:20	1	13.8	8.2
01/26/2000 09:15	1	1.9	7.52
02/14/2000 09:00	1	4.3	7.61
03/29/2000 12:00	1	11.4	7.94
04/06/2000 09:15	1	10.6	7.99
05/24/2000 09:05	1	16.3	7.9
01/17/2001 11:30	1	3.3	8.21
02/06/2001 11:00	1	8.2	8.4

Collection Date Time	Hi-Flow Month	Temp Celcius	Field Ph
03/08/2001 10:00	1	6.1	8.49
04/10/2001 10:15	1	13.1	7.89
05/17/2001 09:00	1	13.5	8.09
01/23/2002 10:05	1	6	8.01
02/25/2002 14:00	1	8.1	8.24
03/18/2002 13:00	1	8.5	8.09
04/30/2002 10:30	1	13.59	7.72
05/30/2002 09:15	1	16.98	7.58
01/22/2003 14:15	1	4.93	8.05
02/11/2003 08:55	1	3.1	8.23
03/10/2003 12:30	1	8.27	7.93
04/10/2003 09:30	1	10.56	8.12
02/18/2004 10:15	1	5.14	7.75
04/21/2004 15:55	1	13.73	7.59
02/17/2005 09:30	1	4.63	8.06
04/19/2005 09:10	1	12.08	8.11
02/21/2006 10:00	1	5.1	7.8
04/06/2006 09:00	1	9.2	6.8
01/17/2007 12:15	1	7.1	8
03/20/2007 09:15	1	8.8	8.2
05/09/2007 12:25	1	14.8	8.3
01/23/2008 10:30	1	5.6	8
03/05/2008 11:00	1	5.9	8.1
05/15/2008 13:45	1	16.4	
01/22/2009 14:50	1	5.5	8.2
03/10/2009 12:25	1	7.1	8.2
05/12/2009 10:30	1	15.1	6.8
01/28/2010 12:40	1	8.9	8.2
03/24/2010 15:00	1	11.2	8.3
05/18/2010 09:00	1	16.7	7.4
05/26/2010 14:45	1	20.1	8.3
01/20/2011 10:00	1	1.7	8.4
03/24/2011 10:05	1	10	7.9
05/11/2011 10:30	1	16.7	8.3
05/18/2011 08:22	1	15.6	7.5
01/25/2012 12:15	1	5.3	8.2
04/03/2012 10:45	1	13	8.2
01/15/2013 14:35	1	6.4	7.3
03/07/2013 14:05	1	4.7	7.6
05/23/2013 12:35	1	16.5	7.7
90th %'ile Wet Season		15.54	
90th %'ile Annual		22.5	8.4
10th %'ile Annual			7.49
Average			

Attachment D

- **Effluent Data Summary**
- **Wasteload Allocation Spreadsheet**
- **Reasonable Potential Analysis**
- **Dissolved Oxygen Model Calculations**

Lower Stroubles Creek WWTP - VA0060844
DMR Data

Due Date	BOD5-avg	BOD5-max	TRC-avg	TRC-max	DO-min	Ecoli-Avg	Flow-Avg	Flow-Max	pH-min	pH-max	ph10(est)	ph90(est)	TSS-Avg	TSS-Max
10-Jun-2009	1.4	5.5	0	0	7.8		6.314	9.807	6.5	7.2	6.6	7.1	4.8	6.3
10-Jul-2009	1.8	0	0	2	7.6		5.811	10.886	6.8	7.4	6.9	7.3	5.5	7.5
10-Aug-2009	1.4	0	0.002	0.006	7	1	4.473	6.403	6.8	7.3	6.9	7.2	2.7	3.4
10-Sep-2009	0	0	0.001	0.002	7	1	4.775	5.639	7	7.4	7.1	7.3	2.8	2.9
10-Oct-2009	0	0	0.004	0.005	7	4	4.832	7.423	6.8	7.1	6.8	7.1	3.4	3.8
10-Nov-2009	0	0	0.002	0.005	7.2	2	5.141	6.584	6.8	7.1	6.8	7.1	5.2	6.7
10-Dec-2009	1.5	6	0.002	0.003	7.2	25	6.072	15.574	6.8	7.4	6.9	7.3	6.1	8.3
10-Jan-2010	0	0	0	0.003	7.7	1	7.167	15.426	6.9	7.4	7.0	7.3	4.4	4.5
10-Feb-2010	1.3	5.2	0	0	8.4	1	6.545	15.025	7	7.4	7.1	7.3	3.3	4.3
10-Mar-2010	1.3	5.2	0.001	0	8.5	1	6.806	8.797	6.9	7.2	6.9	7.2	3.6	6.1
10-Apr-2010	1.4	0	0	0	9	1	6.796	10.648	6.9	7.2	6.9	7.2	4	3.7
10-May-2010	6.2	11.3	0	0	7.6	1	5.793	6.772	6.7	7.3	6.8	7.2	5.9	12.3
10-Jun-2010	4.2	10.9	0.003	0.007	7.6	1	4.691	5.511	6.6	7.4	6.7	7.3	5.7	9.3
10-Jul-2010	0	0	0.003	0.008	7	7	4.245	4.909	6.8	7.2	6.9	7.1	3.1	4
10-Aug-2010	0	0	0.002	0.004	7	1	4.109	6.091	6.8	7.3	6.9	7.2	3	4.2
10-Sep-2010	0	0	0.001	0.003	7	1	4.884	6.614	6.8	7.2	6.9	7.1	4.4	6.6
10-Oct-2010	0	0	0.001	0.006	7	1	5.019	6.497	6.6	6.9	6.6	6.9	4.8	6.9
10-Nov-2010	2	8.1	0	0.002	7.2	1	5.032	6.01	6.4	7	6.5	6.9	4.6	5.9
10-Dec-2010	0	0	0	0.001	7.6	4	4.743	6.851	6.5	7.3	6.6	7.2	3.2	3.7
10-Jan-2011	0	0	0.003	0.009	8.2	1	4.683	10.736	6.7	7.4	6.8	7.3	3.6	4.2
10-Feb-2011	0	0	0.002	0.004	9.3	1	4.389	5.128	6.9	7.3	7.0	7.2	4.2	6.1
10-Mar-2011	2.7	5.4	0.001	0.003	9.4	1	5.08	7.814	6.8	7.3	6.9	7.2	3.5	4.4
10-Apr-2011	1.2	0	0	0.002	9	1	6.305	10.327	6.8	7.4	6.9	7.3	2.8	3.9
10-May-2011	1.4	5.5	0	0	8.4	1	6.502	9.939	6.9	7.1	6.9	7.1	3.7	6.6
10-Jun-2011	0	0	0	0	8	1	5.921	9.945	6.8	7.5	6.9	7.4	3	5.7
10-Jul-2011	0	0	0	0	7	1	4.156	5.031	7	7.7	7.1	7.6	2	2.7
10-Aug-2011	0	0	0	0	7	1	3.786	5.5	7.1	7.3	7.1	7.3	2.7	4.2
10-Sep-2011	0	0	0.001	0.002	7.1	1	3.868	4.574	6.8	7.4	6.9	7.3	3.4	5.2
10-Oct-2011	0	0	0.001	0.003	7.1	2	4.841	9.335	6.6	7.2	6.7	7.1	1.8	2.2
10-Nov-2011	0	0	0	0	7.5	7	5.083	6.403	6.6	7	6.7	6.9	1.8	2.1
10-Dec-2011	0	0	0	0	7.7	1	4.938	8.824	6.7	7.2	6.8	7.1	1.9	2.1
10-Jan-2012	1.3	5.2	0	0.002	8.1	1	5.259	10.137	6.7	7.5	6.8	7.4	2.5	3.6
10-Feb-2012	1.3	5	0	0	9	1	5.072	6.426	6.8	7.3	6.9	7.2	2.7	3
10-Mar-2012	9.1	12.9	0	0	8	2	5.728	8.546	6.8	7.4	6.9	7.3	8.4	13.3
10-Apr-2012	7.2	11.5	0	0	7.5	1	6.132	9.318	7	7.3	7.0	7.3	5.2	7.4
10-May-2012	2.8	5.7	0	0	7.2	1	5.816	8.975	6.7	7.3	6.8	7.2	4.1	5.2
10-Jun-2012	1.4	0	0	0	7.8	1	4.936	6.064	6.5	7.2	6.6	7.1	2	2.3
10-Jul-2012	0	0	0	0	7.1	1	4.381	5.558	6.7	7.1	6.8	7.0	2.2	2.5
10-Aug-2012	0	0	0	0	6.9	5	4.231	4.928	6.7	7	6.7	7.0	2.6	3.8
10-Sep-2012	1	0	0	0	6.8	28	4.811	6.223	6.7	7.3	6.8	7.2	3.3	4.3
10-Oct-2012	0	0	0	0	7.1	1	4.857	6.952	6.6	7	6.7	6.9	3	3.6
10-Nov-2012	1	0	0	0	7.2	1	4.481	5.095	6.7	7.3	6.8	7.2	2.5	3.1
10-Dec-2012	1.3	5.2	0	0	7.1	1	4.646	5.65	6.7	7.2	6.8	7.1	3.1	3.5
10-Jan-2013	0	0	0	0	8.2	1	4.641	5.31	6.7	7.3	6.8	7.2	2.6	3.7
10-Feb-2013	3.9	6.8	0	0	8.2	10	6.319	14.75	7	7.3	7.0	7.3	3.5	4.6
10-Mar-2013	6.8	8.1	0	0	8	11	6.669	9.186	6.8	7.4	6.9	7.3	4.3	5.8
10-Apr-2013	6.8	8.6	0	0	7.5	2	5.422	6.787	6.8	7.3	6.9	7.2	4.4	4.4
10-May-2013	8.5	9.2	0	0	7.2	2	5.86	8.375	6.9	7.5	7.0	7.4	7.7	6.9
10-Jun-2013	4.9	9.3	0	0	7.1	3	6.424	11.577	7	7.4	7.1	7.3	3.1	5.9
10-Jul-2013	0	0	0	0	7.9	1	6.183	9.945	7.2	7.6	7.3	7.5	3.6	5.2
10-Aug-2013	6	7.2			7.6	8	6.781	17.357	7.4	7.9	7.5	7.8	4.6	6
10-Sep-2013	0	0			7.4	3	4.879	6.6	7.4	7.8	7.5	7.7	2.2	3.2
10-Oct-2013	0	0			7.1	11	4.767	5.558	7.1	7.8	7.2	7.7	3.3	6.4
10-Nov-2013	0	0			7.2	11	4.715	6.851	7.1	7.6	7.2	7.5	1.8	2.3
10-Dec-2013	0	0			7.7	3	4.535	6.963	7	7.6	7.1	7.5	2.1	2.7
10-Jan-2014	0	0			8.8	2	5.783	11.376	7.2	7.8	7.3	7.7	3	3.9
10-Feb-2014	0	0			7.4	2	5.415	6.318	7.2	7.7	7.3	7.6	3.4	4.3
10-Mar-2014	4.2	5.5			7.8	2	7.062	12.185	7	7.4	7.1	7.3	6.5	7.6
10-Apr-2014	5.9	6.5			8.2	1.5	5.864	8.483	7.2	7.6	7.3	7.5	3.9	4.8
Avg	1.7	2.9	0.001	0.042	7.6	3.3	5.330	8.246	6.8	7.3	6.9	7.3	3.7	5.0

Date	Hardness
10/1/2009	150
9/27/2010	118
10/11/2011	144
10/16/2012	113
10/15/2013	156
Average	136.2

FRESHWATER
WATER QUALITY CRITERIA / WASTELOAD ALLOCATION ANALYSIS

Facility Name: Lower Stroubles Creek WWTP (VA0060844) Permit No.: VA0060844

Receiving Stream: New River

Version: OWP Guidance Memo 00-2011 (8/24/00)

Stream Information

Mean Hardness (as CaCO3) =	74.7	mg/L
90% Temperature (Annual) =	22.5	deg C
90% Temperature (Wet season) =	15.5	deg C
90% Maximum pH =	8.4	SU
10% Maximum pH =	7.5	SU
Tier Designation (1 or 2) =	2	
Public Water Supply (PWS) Y/N? =	y	
Trout Present Y/N? =	n	
Early Life Stages Present Y/N? =	y	

Stream Flows

1Q10 (Annual) =	451	MGD
7Q10 (Annual) =	563	MGD
30Q10 (Annual) =	651	MGD
1Q10 (Wet season) =	534	MGD
30Q10 (Wet season)	1076	MGD
30Q5 =	737	MGD
Harmonic Mean =	1533	MGD

Mixing Information

Annual - 1Q10 Mix =	5.41	%
- 7Q10 Mix =	100	%
- 30Q10 Mix =	100	%
Wet Season - 1Q10 Mix =	100	%
- 30Q10 Mix =	100	%

Effluent Information

Mean Hardness (as CaCO3) =	136.2	mg/L
90% Temp (Annual) =	22.5	deg C
90% Temp (Wet season) =	15.5	deg C
90% Maximum pH =	7.3	SU
10% Maximum pH =	6.9	SU
Discharge Flow =	9	MGD

Parameter	Background	Water Quality Criteria				Wasteload Allocations				Antidegradation Baseline				Antidegradation Allocations				**Most Limiting Allocations**			
(ug/l unless noted)	Conc.	Acute	Chronic	HH (PWS)	HH	Acute	Chronic	HH (PWS)	HH	Acute	Chronic	HH (PWS)	HH	Acute	Chronic	HH (PWS)	HH	**Acute**	**Chronic**	**HH (PWS)**	**HH**
Acenapthene	0	--	--	6.7E+02	9.9E+02	--	--	5.6E+04	8.2E+04	--	--	6.7E+01	9.9E+01	--	--	5.6E+03	8.2E+03	**--**	**--**	**5.6E+03**	**8.2E+03**
Acrolein	0	--	--	6.1E+00	9.3E+00	--	--	5.1E+02	7.7E+02	--	--	6.1E-01	9.3E-01	--	--	5.1E+01	7.7E+01	**--**	**--**	**5.1E+01**	**7.7E+01**
Acrylonitrile[c]	0	--	--	5.1E-01	2.5E+00	--	--	8.7E+01	4.3E+02	--	--	5.1E-02	2.5E-01	--	--	8.7E+00	4.3E+01	**--**	**--**	**8.7E+00**	**4.3E+01**
Aldrin [c]	0	3.0E+00	--	4.9E-04	5.0E-04	1.1E+01	--	8.4E-02	8.6E-02	7.5E-01	--	4.9E-05	5.0E-05	3.8E+01	--	8.4E-03	8.6E-03	**1.1E+01**	**--**	**8.4E-03**	**8.6E-03**
Ammonia-N (mg/l) (Yearly)	0.025	1.25E+01	8.58E-01	--	--	4.62E+01	6.11E+01	--	--	1.17E+00	2.33E-01	--	--	5.86E+01	1.53E+01	--	--	**4.62E+01**	**1.53E+01**	**--**	**--**
Ammonia-N (mg/l) (High Flow)	0.025	4.50E+00	1.29E+00	--	--	2.70E+02	1.53E+02	--	--	1.14E+00	3.42E-01	--	--	6.76E+01	3.83E+01	--	--	**6.76E+01**	**3.83E+01**	**--**	**--**
Anthracene	0	--	--	8.3E+03	4.0E+04	--	--	6.9E+05	3.3E+06	--	--	8.3E+02	4.0E+03	--	--	6.9E+04	3.3E+05	**--**	**--**	**6.9E+04**	**3.3E+05**
Antimony	0	--	--	5.6E+00	6.4E+02	--	--	4.6E+02	5.3E+04	--	--	5.6E-01	6.4E+01	--	--	4.6E+01	5.3E+03	**--**	**--**	**4.6E+01**	**5.3E+03**
Arsenic	0	3.4E+02	1.5E+02	1.0E+01	--	1.3E+03	9.5E+03	8.3E+02	--	8.5E+01	3.8E+01	1.0E+00	--	4.3E+03	2.4E+03	8.3E+01	--	**1.3E+03**	**2.4E+03**	**8.3E+01**	**--**
Barium	0	--	--	2.0E+03	--	--	--	1.7E+05	--	--	--	2.0E+02	--	--	--	1.7E+04	--	**--**	**--**	**1.7E+04**	**--**
Benzene [c]	0	--	--	2.2E+01	5.1E+02	--	--	3.8E+03	8.7E+04	--	--	2.2E+00	5.1E+01	--	--	3.8E+02	8.7E+03	**--**	**--**	**3.8E+02**	**8.7E+03**
Benzidine[c]	0	--	--	8.6E-04	2.0E-03	--	--	1.5E-01	3.4E-01	--	--	8.6E-05	2.0E-04	--	--	1.5E-02	3.4E-02	**--**	**--**	**1.5E-02**	**3.4E-02**
Benzo (a) anthracene [c]	0	--	--	3.8E-02	1.8E-01	--	--	6.5E+00	3.1E+01	--	--	3.8E-03	1.8E-02	--	--	6.5E-01	3.1E+00	**--**	**--**	**6.5E-01**	**3.1E+00**
Benzo (b) fluoranthene [c]	0	--	--	3.8E-02	1.8E-01	--	--	6.5E+00	3.1E+01	--	--	3.8E-03	1.8E-02	--	--	6.5E-01	3.1E+00	**--**	**--**	**6.5E-01**	**3.1E+00**
Benzo (k) fluoranthene [c]	0	--	--	3.8E-02	1.8E-01	--	--	6.5E+00	3.1E+01	--	--	3.8E-03	1.8E-02	--	--	6.5E-01	3.1E+00	**--**	**--**	**6.5E-01**	**3.1E+00**
Benzo (a) pyrene [c]	0	--	--	3.8E-02	1.8E-01	--	--	6.5E+00	3.1E+01	--	--	3.8E-03	1.8E-02	--	--	6.5E-01	3.1E+00	**--**	**--**	**6.5E-01**	**3.1E+00**
Bis2-Chloroethyl Ether [c]	0	--	--	3.0E-01	5.3E+00	--	--	5.1E+01	9.1E+02	--	--	3.0E-02	5.3E-01	--	--	5.1E+00	9.1E+01	**--**	**--**	**5.1E+00**	**9.1E+01**
Bis2-Chloroisopropyl Ether	0	--	--	1.4E+03	6.5E+04	--	--	1.2E+05	5.4E+06	--	--	1.4E+02	6.5E+03	--	--	1.2E+04	5.4E+05	**--**	**--**	**1.2E+04**	**5.4E+05**
Bis 2-Ethylhexyl Phthalate [c]	0	--	--	1.2E+01	2.2E+01	--	--	2.1E+03	3.8E+03	--	--	1.2E+00	2.2E+00	--	--	2.1E+02	3.8E+02	**--**	**--**	**2.1E+02**	**3.8E+02**
Bromoform [c]	0	--	--	4.3E+01	1.4E+03	--	--	7.4E+03	2.4E+05	--	--	4.3E+00	1.4E+02	--	--	7.4E+02	2.4E+04	**--**	**--**	**7.4E+02**	**2.4E+04**
Butylbenzylphthalate	0	--	--	1.5E+03	1.9E+03	--	--	1.2E+05	1.6E+05	--	--	1.5E+02	1.9E+02	--	--	1.2E+04	1.6E+04	**--**	**--**	**1.2E+04**	**1.6E+04**
Cadmium	0	3.5E+00	9.1E-01	5.0E+00	--	1.3E+01	5.8E+01	4.1E+02	--	7.2E-01	2.3E-01	5.0E-01	--	3.7E+01	1.4E+01	4.1E+01	--	**1.3E+01**	**1.4E+01**	**4.1E+01**	**--**
Carbon Tetrachloride [c]	0	--	--	2.3E+00	1.6E+01	--	--	3.9E+02	2.7E+03	--	--	2.3E-01	1.6E+00	--	--	3.9E+01	2.7E+02	**--**	**--**	**3.9E+01**	**2.7E+02**
Chlordane [c]	0	2.4E+00	4.3E-03	8.0E-03	8.1E-03	8.9E+00	2.7E-01	1.4E+00	1.4E+00	6.0E-01	1.1E-03	8.0E-04	8.1E-04	3.1E+01	6.8E-02	1.4E-01	1.4E-01	**8.9E+00**	**6.8E-02**	**1.4E-01**	**1.4E-01**
Chloride	0	8.6E+05	2.3E+05	2.5E+05	--	3.2E+06	1.5E+07	2.1E+07	--	2.2E+05	5.8E+04	2.5E+04	--	1.1E+07	3.7E+06	2.1E+06	--	**3.2E+06**	**3.7E+06**	**2.1E+06**	**--**
TRC	0	1.9E+01	1.1E+01	--	--	7.1E+01	7.0E+02	--	--	4.8E+00	2.8E+00	--	--	2.4E+02	1.7E+02	--	--	**7.1E+01**	**1.7E+02**	**--**	**--**
Chlorobenzene	0	--	--	1.3E+02	1.6E+03	--	--	1.1E+04	1.3E+05	--	--	1.3E+01	1.6E+02	--	--	1.1E+03	1.3E+04	**--**	**--**	**1.1E+03**	**1.3E+04**

Parameter	Background	Water Quality Criteria				Wasteload Allocations				Antidegradation Baseline				Antidegradation Allocations				Most Limiting Allocations			
(ug/l unless noted)	Conc.	Acute	Chronic	HH (PWS)	HH	Acute	Chronic	HH (PWS)	HH	Acute	Chronic	HH (PWS)	HH	Acute	Chronic	HH (PWS)	HH	Acute	Chronic	HH (PWS)	HH
Chlorodibromomethane[C]	0	--	--	4.0E+00	1.3E+02	--	--	6.9E+02	2.2E+04	--	--	4.0E-01	1.3E+01	--	--	6.9E+01	2.2E+03	--	--	**6.9E+01**	**2.2E+03**
Chloroform	0	--	--	3.4E+02	1.1E+04	--	--	2.8E+04	9.1E+05	--	--	3.4E+01	1.1E+03	--	--	2.8E+03	9.1E+04	--	--	**2.8E+03**	**9.1E+04**
2-Chloronaphthalene	0	--	--	1.0E+03	1.6E+03	--	--	8.3E+04	1.3E+05	--	--	1.0E+02	1.6E+02	--	--	8.3E+03	1.3E+04	--	--	**8.3E+03**	**1.3E+04**
2-Chlorophenol	0	--	--	8.1E+01	1.5E+02	--	--	6.7E+03	1.2E+04	--	--	8.1E+00	1.5E+01	--	--	6.7E+02	1.2E+03	--	--	**6.7E+02**	**1.2E+03**
Chlorpyrifos	0	8.3E-02	4.1E-02	--	--	3.1E-01	2.6E+00	--	--	2.1E-02	1.0E-02	--	--	1.1E+00	6.5E-01	--	--	**3.1E-01**	**6.5E-01**	--	--
Chromium III	0	5.3E+02	5.9E+01	--	--	2.0E+03	3.7E+03	--	--	1.1E+02	1.5E+01	--	--	5.8E+03	9.4E+02	--	--	**2.0E+03**	**9.4E+02**	--	--
Chromium VI	0	1.6E+01	1.1E+01	--	--	5.9E+01	7.0E+02	--	--	4.0E+00	2.8E+00	--	--	2.0E+02	1.7E+02	--	--	**5.9E+01**	**1.7E+02**	--	--
Chromium, Total	0	--	--	1.0E+02	--	--	--	8.3E+03	--	--	--	1.0E+01	--	--	--	8.3E+02	--	--	--	**8.3E+02**	--
Chrysene [C]	0	--	--	3.8E-03	1.8E-02	--	--	6.5E-01	3.1E+00	--	--	3.8E-04	1.8E-03	--	--	6.5E-02	3.1E-01	--	--	**6.5E-02**	**3.1E-01**
Copper	0	1.2E+01	7.1E+00	1.3E+03	--	4.6E+01	4.5E+02	1.1E+05	--	2.6E+00	1.8E+00	1.3E+02	--	1.3E+02	1.1E+02	1.1E+04	--	**4.6E+01**	**1.1E+02**	**1.1E+04**	--
Cyanide, Free	0	2.2E+01	5.2E+00	1.4E+02	1.6E+04	8.2E+01	3.3E+02	1.2E+04	1.3E+06	5.5E+00	1.3E+00	1.4E+01	1.6E+03	2.8E+02	8.3E+01	1.2E+03	1.3E+05	**8.2E+01**	**8.3E+01**	**1.2E+03**	**1.3E+05**
DDD [C]	0	--	--	3.1E-03	3.1E-03	--	--	5.3E-01	5.3E-01	--	--	3.1E-04	3.1E-04	--	--	5.3E-02	5.3E-02	--	--	**5.3E-02**	**5.3E-02**
DDE [C]	0	--	--	2.2E-03	2.2E-03	--	--	3.8E-01	3.8E-01	--	--	2.2E-04	2.2E-04	--	--	3.8E-02	3.8E-02	--	--	**3.8E-02**	**3.8E-02**
DDT [C]	0	1.1E+00	1.0E-03	2.2E-03	2.2E-03	4.1E+00	6.4E-02	3.8E-01	3.8E-01	2.8E-01	2.5E-04	2.2E-04	2.2E-04	1.4E+01	1.6E-02	3.8E-02	3.8E-02	**4.1E+00**	**1.6E-02**	**3.8E-02**	**3.8E-02**
Demeton	0	--	1.0E-01	--	--	--	6.4E+00	--	--	--	2.5E-02	--	--	--	1.6E+00	--	--	--	**1.6E+00**	--	--
Diazinon	0	1.7E-01	1.7E-01	--	--	6.3E-01	1.1E+01	--	--	4.3E-02	4.3E-02	--	--	2.2E+00	2.7E+00	--	--	**6.3E-01**	**2.7E+00**	--	--
Dibenz(a,h)anthracene [C]	0	--	--	3.8E-02	1.8E-01	--	--	6.5E+00	3.1E+01	--	--	3.8E-03	1.8E-02	--	--	6.5E-01	3.1E+00	--	--	**6.5E-01**	**3.1E+00**
1,2-Dichlorobenzene	0	--	--	4.2E+02	1.3E+03	--	--	3.5E+04	1.1E+05	--	--	4.2E+01	1.3E+02	--	--	3.5E+03	1.1E+04	--	--	**3.5E+03**	**1.1E+04**
1,3-Dichlorobenzene	0	--	--	3.2E+02	9.6E+02	--	--	2.7E+04	8.0E+04	--	--	3.2E+01	9.6E+01	--	--	2.7E+03	8.0E+03	--	--	**2.7E+03**	**8.0E+03**
1,4-Dichlorobenzene	0	--	--	6.3E+01	1.9E+02	--	--	5.2E+03	1.6E+04	--	--	6.3E+00	1.9E+01	--	--	5.2E+02	1.6E+03	--	--	**5.2E+02**	**1.6E+03**
3,3-Dichlorobenzidine[C]	0	--	--	2.1E-01	2.8E-01	--	--	3.6E+01	4.8E+01	--	--	2.1E-02	2.8E-02	--	--	3.6E+00	4.8E+00	--	--	**3.6E+00**	**4.8E+00**
Dichlorobromomethane [C]	0	--	--	5.5E+00	1.7E+02	--	--	9.4E+02	2.9E+04	--	--	5.5E-01	1.7E+01	--	--	9.4E+01	2.9E+03	--	--	**9.4E+01**	**2.9E+03**
1,2-Dichloroethane [C]	0	--	--	3.8E+00	3.7E+02	--	--	6.5E+02	6.3E+04	--	--	3.8E-01	3.7E+01	--	--	6.5E+01	6.3E+03	--	--	**6.5E+01**	**6.3E+03**
1,1-Dichloroethylene	0	--	--	3.3E+02	7.1E+03	--	--	2.7E+04	5.9E+05	--	--	3.3E+01	7.1E+02	--	--	2.7E+03	5.9E+04	--	--	**2.7E+03**	**5.9E+04**
1,2-trans-dichloroethylene	0	--	--	1.4E+02	1.0E+04	--	--	1.2E+04	8.3E+05	--	--	1.4E+01	1.0E+03	--	--	1.2E+03	8.3E+04	--	--	**1.2E+03**	**8.3E+04**
2,4-Dichlorophenol	0	--	--	7.7E+01	2.9E+02	--	--	6.4E+03	2.4E+04	--	--	7.7E+00	2.9E+01	--	--	6.4E+02	2.4E+03	--	--	**6.4E+02**	**2.4E+03**
2,4-Dichlorophenoxy acetic acid (2,4-D)	0	--	--	1.0E+02	--	--	--	8.3E+03	--	--	--	1.0E+01	--	--	--	8.3E+02	--	--	--	**8.3E+02**	--
1,2-Dichloropropane[C]	0	--	--	5.0E+00	1.5E+02	--	--	8.6E+02	2.6E+04	--	--	5.0E-01	1.5E+01	--	--	8.6E+01	2.6E+03	--	--	**8.6E+01**	**2.6E+03**
1,3-Dichloropropene [C]	0	--	--	3.4E+00	2.1E+02	--	--	5.8E+02	3.6E+04	--	--	3.4E-01	2.1E+01	--	--	5.8E+01	3.6E+03	--	--	**5.8E+01**	**3.6E+03**
Dieldrin [C]	0	2.4E-01	5.6E-02	5.2E-04	5.4E-04	8.9E-01	3.6E+00	8.9E-02	9.3E-02	6.0E-02	1.4E-02	5.2E-05	5.4E-05	3.1E+00	8.9E-01	8.9E-03	9.3E-03	**8.9E-01**	**8.9E-01**	**8.9E-03**	**9.3E-03**
Diethyl Phthalate	0	--	--	1.7E+04	4.4E+04	--	--	1.4E+06	3.6E+06	--	--	1.7E+03	4.4E+03	--	--	1.4E+05	3.6E+05	--	--	**1.4E+05**	**3.6E+05**
2,4-Dimethylphenol	0	--	--	3.8E+02	8.5E+02	--	--	3.1E+04	7.0E+04	--	--	3.8E+01	8.5E+01	--	--	3.1E+03	7.0E+03	--	--	**3.1E+03**	**7.0E+03**
Dimethyl Phthalate	0	--	--	2.7E+05	1.1E+06	--	--	2.2E+07	9.1E+07	--	--	2.7E+04	1.1E+05	--	--	2.2E+06	9.1E+06	--	--	**2.2E+06**	**9.1E+06**
Di-n-Butyl Phthalate	0	--	--	2.0E+03	4.5E+03	--	--	1.7E+05	3.7E+05	--	--	2.0E+02	4.5E+02	--	--	1.7E+04	3.7E+04	--	--	**1.7E+04**	**3.7E+04**
2,4 Dinitrophenol	0	--	--	6.9E+01	5.3E+03	--	--	5.7E+03	4.4E+05	--	--	6.9E+00	5.3E+02	--	--	5.7E+02	4.4E+04	--	--	**5.7E+02**	**4.4E+04**
2-Methyl-4,6-Dinitrophenol	0	--	--	1.3E+01	2.8E+02	--	--	1.1E+03	2.3E+04	--	--	1.3E+00	2.8E+01	--	--	1.1E+02	2.3E+03	--	--	**1.1E+02**	**2.3E+03**
2,4-Dinitrotoluene [C]	0	--	--	1.1E+00	3.4E+01	--	--	1.9E+02	5.8E+03	--	--	1.1E-01	3.4E+00	--	--	1.9E+01	5.8E+02	--	--	**1.9E+01**	**5.8E+02**
Dioxin 2,3,7,8-tetrachlorodibenzo-p-dioxin	0	--	--	5.0E-08	5.1E-08	--	--	4.1E-06	4.2E-06	--	--	5.0E-09	5.1E-09	--	--	4.1E-07	4.2E-07	--	--	**4.1E-07**	**4.2E-07**
1,2-Diphenylhydrazine[C]	0	--	--	3.6E-01	2.0E+00	--	--	6.2E+01	3.4E+02	--	--	3.6E-02	2.0E-01	--	--	6.2E+00	3.4E+01	--	--	**6.2E+00**	**3.4E+01**
Alpha-Endosulfan	0	2.2E-01	5.6E-02	6.2E+01	8.9E+01	8.2E-01	3.6E+00	5.1E+03	7.4E+03	5.5E-02	1.4E-02	6.2E+00	8.9E+00	2.8E+00	8.9E-01	5.1E+02	7.4E+02	**8.2E-01**	**8.9E-01**	**5.1E+02**	**7.4E+02**
Beta-Endosulfan	0	2.2E-01	5.6E-02	6.2E+01	8.9E+01	8.2E-01	3.6E+00	5.1E+03	7.4E+03	5.5E-02	1.4E-02	6.2E+00	8.9E+00	2.8E+00	8.9E-01	5.1E+02	7.4E+02	**8.2E-01**	**8.9E-01**	**5.1E+02**	**7.4E+02**
Alpha + Beta Endosulfan	0	2.2E-01	5.6E-02	--	--	8.2E-01	3.6E+00	--	--	5.5E-02	1.4E-02	--	--	2.8E+00	8.9E-01	--	--	**8.2E-01**	**8.9E-01**	--	--
Endosulfan Sulfate	0	--	--	6.2E+01	8.9E+01	--	--	5.1E+03	7.4E+03	--	--	6.2E+00	8.9E+00	--	--	5.1E+02	7.4E+02	--	--	**5.1E+02**	**7.4E+02**
Endrin	0	8.6E-02	3.6E-02	5.9E-02	6.0E-02	3.2E-01	2.3E+00	4.9E+00	5.0E+00	2.2E-02	9.0E-03	5.9E-03	6.0E-03	1.1E+00	5.7E-01	4.9E-01	5.0E-01	**3.2E-01**	**5.7E-01**	**4.9E-01**	**5.0E-01**
Endrin Aldehyde	0	--	--	2.9E-01	3.0E-01	--	--	2.4E+01	2.5E+01	--	--	2.9E-02	3.0E-02	--	--	2.4E+00	2.5E+00	--	--	**2.4E+00**	**2.5E+00**

Parameter	Background	Water Quality Criteria				Wasteload Allocations				Antidegradation Baseline				Antidegradation Allocations				**Most Limiting Allocations**			
(ug/l unless noted)	Conc.	Acute	Chronic	HH (PWS)	HH	Acute	Chronic	HH (PWS)	HH	Acute	Chronic	HH (PWS)	HH	Acute	Chronic	HH (PWS)	HH	**Acute**	**Chronic**	**HH (PWS)**	**HH**
Ethylbenzene	0	--	--	5.3E+02	2.1E+03	--	--	4.4E+04	1.7E+05	--	--	5.3E+01	2.1E+02	--	--	4.4E+03	1.7E+04	**--**	**--**	**4.4E+03**	**1.7E+04**
Fluoranthene	0	--	--	1.3E+02	1.4E+02	--	--	1.1E+04	1.2E+04	--	--	1.3E+01	1.4E+01	--	--	1.1E+03	1.2E+03	**--**	**--**	**1.1E+03**	**1.2E+03**
Fluorene	0	--	--	1.1E+03	5.3E+03	--	--	9.1E+04	4.4E+05	--	--	1.1E+02	5.3E+02	--	--	9.1E+03	4.4E+04	**--**	**--**	**9.1E+03**	**4.4E+04**
Foaming Agents	0	--	--	5.0E+02	--	--	--	4.1E+04	--	--	--	5.0E+01	--	--	--	4.1E+03	--	**--**	**--**	**4.1E+03**	**--**
Guthion	0	--	1.0E-02	--	--	--	6.4E-01	--	--	--	2.5E-03	--	--	--	1.6E-01	--	--	**--**	**1.6E-01**	**--**	**--**
Heptachlor [c]	0	5.2E-01	3.8E-03	7.9E-04	7.9E-04	1.9E+00	2.4E-01	1.4E-01	1.4E-01	1.3E-01	9.5E-04	7.9E-05	7.9E-05	6.6E+00	6.0E-02	1.4E-02	1.4E-02	**1.9E+00**	**6.0E-02**	**1.4E-02**	**1.4E-02**
Heptachlor Epoxide[c]	0	5.2E-01	3.8E-03	3.9E-04	3.9E-04	1.9E+00	2.4E-01	6.7E-02	6.7E-02	1.3E-01	9.5E-04	3.9E-05	3.9E-05	6.6E+00	6.0E-02	6.7E-03	6.7E-03	**1.9E+00**	**6.0E-02**	**6.7E-03**	**6.7E-03**
Hexachlorobenzene[c]	0	--	--	2.8E-03	2.9E-03	--	--	4.8E-01	5.0E-01	--	--	2.8E-04	2.9E-04	--	--	4.8E-02	5.0E-02	**--**	**--**	**4.8E-02**	**5.0E-02**
Hexachlorobutadiene[c]	0	--	--	4.4E+00	1.8E+02	--	--	7.5E+02	3.1E+04	--	--	4.4E-01	1.8E+01	--	--	7.5E+01	3.1E+03	**--**	**--**	**7.5E+01**	**3.1E+03**
Hexachlorocyclohexane Alpha-BHC[c]	0	--	--	2.6E-02	4.9E-02	--	--	4.5E+00	8.4E+00	--	--	2.6E-03	4.9E-03	--	--	4.5E-01	8.4E-01	**--**	**--**	**4.5E-01**	**8.4E-01**
Hexachlorocyclohexane Beta-BHC[c]	0	--	--	9.1E-02	1.7E-01	--	--	1.6E+01	2.9E+01	--	--	9.1E-03	1.7E-02	--	--	1.6E+00	2.9E+00	**--**	**--**	**1.6E+00**	**2.9E+00**
Hexachlorocyclohexane Gamma-BHC[c] (Lindane)	0	9.5E-01	--	9.8E-01	1.8E+00	3.5E+00	--	1.7E+02	3.1E+02	2.4E-01	--	9.8E-02	1.8E-01	1.2E+01	--	1.7E+01	3.1E+01	**3.5E+00**	**--**	**1.7E+01**	**3.1E+01**
Hexachlorocyclopentadiene	0	--	--	4.0E+01	1.1E+03	--	--	3.3E+03	9.1E+04	--	--	4.0E+00	1.1E+02	--	--	3.3E+02	9.1E+03	**--**	**--**	**3.3E+02**	**9.1E+03**
Hexachloroethane[c]	0	--	--	1.4E+01	3.3E+01	--	--	2.4E+03	5.7E+03	--	--	1.4E+00	3.3E+00	--	--	2.4E+02	5.7E+02	**--**	**--**	**2.4E+02**	**5.7E+02**
Hydrogen Sulfide	0	--	2.0E+00	--	--	--	1.3E+02	--	--	--	5.0E-01	--	--	--	3.2E+01	--	--	**--**	**3.2E+01**	**--**	**--**
Indeno (1,2,3-cd) pyrene [c]	0	--	--	3.8E-02	1.8E-01	--	--	6.5E+00	3.1E+01	--	--	3.8E-03	1.8E-02	--	--	6.5E-01	3.1E+00	**--**	**--**	**6.5E-01**	**3.1E+00**
Iron	0	--	--	3.0E+02	--	--	--	2.5E+04	--	--	--	3.0E+01	--	--	--	2.5E+03	--	**--**	**--**	**2.5E+03**	**--**
Isophorone[c]	0	--	--	3.5E+02	9.6E+03	--	--	6.0E+04	1.6E+06	--	--	3.5E+01	9.6E+02	--	--	6.0E+03	1.6E+05	**--**	**--**	**6.0E+03**	**1.6E+05**
Kepone	0	--	0.0E+00	--	--	--	0.0E+00	--	--	--	0.0E+00	--	--	--	0.0E+00	--	--	**--**	**0.0E+00**	**--**	**--**
Lead	0	1.1E+02	9.5E+00	1.5E+01	--	3.9E+02	6.0E+02	1.2E+03	--	2.1E+01	2.4E+00	1.5E+00	--	1.1E+03	1.5E+02	1.2E+02	--	**3.9E+02**	**1.5E+02**	**1.2E+02**	**--**
Malathion	0	--	1.0E-01	--	--	--	6.4E+00	--	--	--	2.5E-02	--	--	--	1.6E+00	--	--	**--**	**1.6E+00**	**--**	**--**
Manganese	0	--	--	5.0E+01	--	--	--	4.1E+03	--	--	--	5.0E+00	--	--	--	4.1E+02	--	**--**	**--**	**4.1E+02**	**--**
Mercury	0	1.4E+00	7.7E-01	--	--	5.2E+00	4.9E+01	--	--	3.5E-01	1.9E-01	--	--	1.8E+01	1.2E+01	--	--	**5.2E+00**	**1.2E+01**	**--**	**--**
Methyl Bromide	0	--	--	4.7E+01	1.5E+03	--	--	3.9E+03	1.2E+05	--	--	4.7E+00	1.5E+02	--	--	3.9E+02	1.2E+04	**--**	**--**	**3.9E+02**	**1.2E+04**
Methylene Chloride [c]	0	--	--	4.6E+01	5.9E+03	--	--	7.9E+03	1.0E+06	--	--	4.6E+00	5.9E+02	--	--	7.9E+02	1.0E+05	**--**	**--**	**7.9E+02**	**1.0E+05**
Methoxychlor	0	--	3.0E-02	1.0E+02	--	--	1.9E+00	8.3E+03	--	--	7.5E-03	1.0E+01	--	--	4.8E-01	8.3E+02	--	**--**	**4.8E-01**	**8.3E+02**	**--**
Mirex	0	--	0.0E+00	--	--	--	0.0E+00	--	--	--	0.0E+00	--	--	--	0.0E+00	--	--	**--**	**0.0E+00**	**--**	**--**
Nickel	0	1.7E+02	1.6E+01	6.1E+02	4.6E+03	6.3E+02	1.0E+03	5.1E+04	3.8E+05	3.6E+01	4.0E+00	6.1E+01	4.6E+02	1.8E+03	2.5E+02	5.1E+03	3.8E+04	**6.3E+02**	**2.5E+02**	**5.1E+03**	**3.8E+04**
Nitrate (as N)	0.865	--	--	1.0E+04	--	--	--	8.3E+05	--	--	--	1.0E+03	--	--	--	8.3E+04	--	**--**	**--**	**8.3E+04**	**--**
Nitrobenzene	0	--	--	1.7E+01	6.9E+02	--	--	1.4E+03	5.7E+04	--	--	1.7E+00	6.9E+01	--	--	1.4E+02	5.7E+03	**--**	**--**	**1.4E+02**	**5.7E+03**
N-Nitrosodimethylamine[c]	0	--	--	6.9E-03	3.0E+01	--	--	1.2E+00	5.1E+03	--	--	6.9E-04	3.0E+00	--	--	1.2E-01	5.1E+02	**--**	**--**	**1.2E-01**	**5.1E+02**
N-Nitrosodiphenylamine[c]	0	--	--	3.3E+01	6.0E+01	--	--	5.7E+03	1.0E+04	--	--	3.3E+00	6.0E+00	--	--	5.7E+02	1.0E+03	**--**	**--**	**5.7E+02**	**1.0E+03**
N-Nitrosodi-n-propylamine[c]	0	--	--	5.0E-02	5.1E+00	--	--	8.6E+00	8.7E+02	--	--	5.0E-03	5.1E-01	--	--	8.6E-01	8.7E+01	**--**	**--**	**8.6E-01**	**8.7E+01**
Nonylphenol	0	2.8E+01	6.6E+00	--	--	1.0E+02	4.2E+02	--	--	7.0E+00	1.7E+00	--	--	3.6E+02	1.0E+02	--	--	**1.0E+02**	**1.0E+02**	**--**	**--**
Parathion	0	6.5E-02	1.3E-02	--	--	2.4E-01	8.3E-01	--	--	1.6E-02	3.3E-03	--	--	8.3E-01	2.1E-01	--	--	**2.4E-01**	**2.1E-01**	**--**	**--**
PCB Total[c]	0	--	1.4E-02	6.4E-04	6.4E-04	--	8.9E-01	1.1E-01	1.1E-01	--	3.5E-03	6.4E-05	6.4E-05	--	2.2E-01	1.1E-02	1.1E-02	**--**	**2.2E-01**	**1.1E-02**	**1.1E-02**
Pentachlorophenol [c]	0	1.1E+01	1.1E+01	2.7E+00	3.0E+01	4.1E+01	6.9E+02	4.6E+02	5.1E+03	3.5E+00	2.7E+00	2.7E-01	3.0E+00	1.8E+02	1.7E+02	4.6E+01	5.1E+02	**4.1E+01**	**1.7E+02**	**4.6E+01**	**5.1E+02**
Phenol	0	--	--	1.0E+04	8.6E+05	--	--	8.3E+05	7.1E+07	--	--	1.0E+03	8.6E+04	--	--	8.3E+04	7.1E+06	**--**	**--**	**8.3E+04**	**7.1E+06**
Pyrene	0	--	--	8.3E+02	4.0E+03	--	--	6.9E+04	3.3E+05	--	--	8.3E+01	4.0E+02	--	--	6.9E+03	3.3E+04	**--**	**--**	**6.9E+03**	**3.3E+04**
Radionuclides	0	--	--	--	--	--	--	--	--	--	--	--	--	--	--	--	--	**--**	**--**	**--**	**--**
Gross Alpha Activity (pCi/L)	0	--	--	1.5E+01	--	--	--	1.2E+03	--	--	--	1.5E+00	--	--	--	1.2E+02	--	**--**	**--**	**1.2E+02**	**--**
Beta and Photon Activity (mrem/yr)	0	--	--	4.0E+00	--	--	--	3.3E+02	--	--	--	4.0E-01	--	--	--	3.3E+01	--	**--**	**--**	**3.3E+01**	**--**
Radium 226 + 228 (pCi/L)	0	--	--	5.0E+00	--	--	--	4.1E+02	--	--	--	5.0E-01	--	--	--	4.1E+01	--	**--**	**--**	**4.1E+01**	**--**
Uranium (ug/l)	0	--	--	3.0E+01	--	--	--	2.5E+03	--	--	--	3.0E+00	--	--	--	2.5E+02	--	**--**	**--**	**2.5E+02**	**--**

Parameter	Background	Water Quality Criteria				Wasteload Allocations				Antidegradation Baseline				Antidegradation Allocations				**Most Limiting Allocations**			
(ug/l unless noted)	Conc.	Acute	Chronic	HH (PWS)	HH	Acute	Chronic	HH (PWS)	HH	Acute	Chronic	HH (PWS)	HH	Acute	Chronic	HH (PWS)	HH	**Acute**	**Chronic**	**HH (PWS)**	**HH**
Selenium, Total Recoverable	0	2.0E+01	5.0E+00	1.7E+02	4.2E+03	7.4E+01	3.2E+02	1.4E+04	3.5E+05	5.0E+00	1.3E+00	1.7E+01	4.2E+02	2.6E+02	7.9E+01	1.4E+03	3.5E+04	**7.4E+01**	**7.9E+01**	**1.4E+03**	**3.5E+04**
Silver	0	2.9E+00	--	--	--	1.1E+01	--	--	--	5.4E-01	--	--	--	2.7E+01	--	--	--	**1.1E+01**	**--**	**--**	**--**
Sulfate	0	--	--	2.5E+05	--	--	--	2.1E+07	--	--	--	2.5E+04	--	--	--	2.1E+06	--	**--**	**--**	**2.1E+06**	**--**
1,1,2,2-Tetrachloroethane[C]	0	--	--	1.7E+00	4.0E+01	--	--	2.9E+02	6.9E+03	--	--	1.7E-01	4.0E+00	--	--	2.9E+01	6.9E+02	**--**	**--**	**2.9E+01**	**6.9E+02**
Tetrachloroethylene[C]	0	--	--	6.9E+00	3.3E+01	--	--	1.2E+03	5.7E+03	--	--	6.9E-01	3.3E+00	--	--	1.2E+02	5.7E+02	**--**	**--**	**1.2E+02**	**5.7E+02**
Thallium	0	--	--	2.4E-01	4.7E-01	--	--	2.0E+01	3.9E+01	--	--	2.4E-02	4.7E-02	--	--	2.0E+00	3.9E+00	**--**	**--**	**2.0E+00**	**3.9E+00**
Toluene	0	--	--	5.1E+02	6.0E+03	--	--	4.2E+04	5.0E+05	--	--	5.1E+01	6.0E+02	--	--	4.2E+03	5.0E+04	**--**	**--**	**4.2E+03**	**5.0E+04**
Total dissolved solids	0	--	--	5.0E+05	--	--	--	4.1E+07	--	--	--	5.0E+04	--	--	--	4.1E+06	--	**--**	**--**	**4.1E+06**	**--**
Toxaphene [C]	0	7.3E-01	2.0E-04	2.8E-03	2.8E-03	2.7E+00	1.3E-02	4.8E-01	4.8E-01	1.8E-01	5.0E-05	2.8E-04	2.8E-04	9.3E+00	3.2E-03	4.8E-02	4.8E-02	**2.7E+00**	**3.2E-03**	**4.8E-02**	**4.8E-02**
Tributyltin	0	4.6E-01	7.2E-02	--	--	1.7E+00	4.6E+00	--	--	1.2E-01	1.8E-02	--	--	5.9E+00	1.1E+00	--	--	**1.7E+00**	**1.1E+00**	**--**	**--**
1,2,4-Trichlorobenzene	0	--	--	3.5E+01	7.0E+01	--	--	2.9E+03	5.8E+03	--	--	3.5E+00	7.0E+00	--	--	2.9E+02	5.8E+02	**--**	**--**	**2.9E+02**	**5.8E+02**
1,1,2-Trichloroethane[C]	0	--	--	5.9E+00	1.6E+02	--	--	1.0E+03	2.7E+04	--	--	5.9E-01	1.6E+01	--	--	1.0E+02	2.7E+03	**--**	**--**	**1.0E+02**	**2.7E+03**
Trichloroethylene [C]	0	--	--	2.5E+01	3.0E+02	--	--	4.3E+03	5.1E+04	--	--	2.5E+00	3.0E+01	--	--	4.3E+02	5.1E+03	**--**	**--**	**4.3E+02**	**5.1E+03**
2,4,6-Trichlorophenol [C]	0	--	--	1.4E+01	2.4E+01	--	--	2.4E+03	4.1E+03	--	--	1.4E+00	2.4E+00	--	--	2.4E+02	4.1E+02	**--**	**--**	**2.4E+02**	**4.1E+02**
2-(2,4,5-Trichlorophenoxy) propionic acid (Silvex)	0	--	--	5.0E+01	--	--	--	4.1E+03	--	--	--	5.0E+00	--	--	--	4.1E+02	--	**--**	**--**	**4.1E+02**	**--**
Vinyl Chloride[C]	0	--	--	2.5E-01	2.4E+01	--	--	4.3E+01	4.1E+03	--	--	2.5E-02	2.4E+00	--	--	4.3E+00	4.1E+02	**--**	**--**	**4.3E+00**	**4.1E+02**
Zinc	0	1.1E+02	9.3E+01	7.4E+03	2.6E+04	4.0E+02	5.9E+03	6.1E+05	2.2E+06	2.3E+01	2.3E+01	7.4E+02	2.6E+03	1.2E+03	1.5E+03	6.1E+04	2.2E+05	**4.0E+02**	**1.5E+03**	**6.1E+04**	**2.2E+05**

Notes:

1. All concentrations expressed as micrograms/liter (ug/l), unless noted otherwise
2. Discharge flow is highest monthly average or Form 2C maximum for Industries and design flow for Municipals
3. Metals measured as Dissolved, unless specified otherwise
4. "C" indicates a carcinogenic parameter
5. Regular WLAs are mass balances (minus background concentration) using the % of stream flow entered above under Mixing Information.
   Antidegradation WLAs are based upon a complete mix.
6. Antideg. Baseline = (0.25(WQC - background conc.) + background conc.) for acute and chronic
   = (0.1(WQC - background conc.) + background conc.) for human health
7. WLAs established at the following stream flows: 1Q10 for Acute, 30Q10 for Chronic Ammonia, 7Q10 for Other Chronic, 30Q5 for Non-carcinogens and Harmonic Mean for Carcinogens. To apply mixing ratios from a model set the stream flow equal to (mixing ratio - 1), effluent flow equal to 1 and 100% mix.

Metal	Target Value (SSTV)
Antimony	4.6E+01
Arsenic	8.3E+01
Barium	1.7E+04
Cadmium	5.3E+00
Chromium III	5.6E+02
Chromium VI	2.4E+01
Copper	1.8E+01
Iron	2.5E+03
Lead	9.0E+01
Manganese	4.1E+02
Mercury	2.1E+00
Nickel	1.5E+02
Selenium	3.0E+01
Silver	4.4E+00
Zinc	1.6E+02

Note: do not use QL's lower than the minimum QL's provided in agency guidance

4/23/2014 9:32:13 AM

Facility = Lower Stroubles Creek WWTP
Chemical = Chronic Toxicity - P. promelas
Chronic averaging period = 4
WLAa =
WLAc = 11.11
Q.L. = 1
# samples/mo. = 1
# samples/wk. = 1

Summary of Statistics:

observations = 5
Expected Value = 1.432
Variance = .738224
C.V. = 0.6
97th percentile daily values = 3.48465
97th percentile 4 day average = 2.38254
97th percentile 30 day average= 1.72706
< Q.L. = 0
Model used = BPJ Assumptions, type 2 data

No Limit is required for this material

The data are:

1
1
1
1
3.16

Spreadsheet for determination of WET test endpoints or WET limits

Excel 97
Revision Date: 01/10/05
File: WETLIM10.xls
(MIX.EXE required also)

Acute Endpoint/Permit Limit			**Use as LC_{50} in Special Condition, as TUa on DMR**				
ACUTE	1.11330336	TUa	LC_{50} =	90	% Use as	1.11	TUa
ACUTE WLAa		1.11330333	Note: Inform the permittee that if the mean of the data exceeds				
			this TUa:	1.0	a limit may result using WLA.EXE		

Chronic Endpoint/Permit Limit			**Use as NOEC in Special Condition, as TUc on DMR**				
CHRONIC	11.1330336	TU_c	NOEC =	9	% Use as	11.11	TU_c
BOTH*	11.1330336	TU_c	NOEC =	9	% Use as	11.11	TU_c
AML	11.1330336	TU_c	NOEC =	9	% Use as	11.11	TU_c

Enter data in the cells with blue type:

Entry Date:	04/23/14	ACUTE WLAa,c	11.1330333	Note: Inform the permittee that if the mean	
Facility Name:		CHRONIC WLAc	63.5555556	of the data exceeds this TUc:	4.57506083
VPDES Number:	VA0060844	* Both means acute expressed as chronic		a limit may result using WLA.EXE	
Outfall Number:	1				

			% Flow to be used from MIX.EXE		**Difuser /modeling study?**		
Plant Flow:	9	MGD			Enter Y/N	N	
Acute 1Q10:	451	MGD	5.41	%	Acute	1	:1
Chronic 7Q10:	563	MGD	100	%	Chronic	1	:1

Are data available to calculate CV? (Y/N)	N	(Minimum of 10 data points, same species, needed)	Go to Page 2
Are data available to calculate ACR? (Y/N)	N	(NOEC<LC50, do not use greater/less than data)	Go to Page 3

IWC_a	26.9468339	%	Plant flow/plant flow + 1Q10
IWC_c	1.573426573	%	Plant flow/plant flow + 7Q10

NOTE: If the IWCa is >33%, specify the NOAEC = 100% test/endpoint for use

Dilution, acute	3.711011111	100/IWCa
Dilution, chronic	63.55555556	100/IWCc
WLA_a	1.113303333	Instream criterion (0.3 TUa) X's Dilution, acute
WLA_c	63.55555556	Instream criterion (1.0 TUc) X's Dilution, chronic
$WLA_{a,c}$	11.13303333	ACR X's WLA_a - converts acute WLA to chronic units
ACR -acute/chronic ratio	10	LC50/NOEC (Default is 10 - if data are available, use tables Page 3)
CV-Coefficient of variatior	0.6	Default of 0.6 - if data are available, use tables Page 2)
Constants eA	0.4109447	Default = 0.41
eB	0.6010373	Default = 0.60
eC	2.4334175	Default = 2.43
eD	2.4334175	Default = 2.43 (1 samp) No. of sample 1

****The Maximum Daily Limit is calculated from the lowest LTA, X's eC. The LTAa,c and MDL using it are driven by the ACR.**

$LTA_{a,c}$	4.575061043	WLAa,c X's eA						
LTA_c	38.19925951	WLAc X's eB					Rounded NOEC's	%
MDL** with $LTA_{a,c}$	11.13303361	TU_c	NOEC =	8.982278	(Protects from acute/chronic toxicity)		NOEC = 9	%
MDL** with LTA_c	92.95474658	TU_c	NOEC =	1.075792	(Protects from chronic toxicity)		NOEC = 2	%
AML with lowest LTA	11.13303361	TU_c	NOEC =	8.982278	Lowest LTA X's eD		NOEC = 9	

IF ONLY ACUTE ENDPOINT/LIMIT IS NEEDED, CONVERT MDL FROM TU_c to TU_a

						Rounded LC50's	%
MDL with $LTA_{a,c}$	1.113303361	TU_a	LC50 =	89.822777	%	LC50 = 90	%
MDL with LTA_c	9.295474658	TU_a	LC50 =	10.757923	%	LC50 = 11	

Page 2 - Follow the directions to develop a site specific CV (coefficient of variation)

IF YOU HAVE AT LEAST 10 DATA POINTS THAT
ARE QUANTIFIABLE (NOT "<" OR ">")
FOR A SPECIES, ENTER THE DATA IN EITHER
COLUMN "G" (VERTEBRATE) OR COLUMN
"J" (INVERTEBRATE). THE 'CV' WILL BE
PICKED UP FOR THE CALCULATIONS
BELOW. THE DEFAULT VALUES FOR eA,
eB, AND eC WILL CHANGE IF THE 'CV' IS
ANYTHING OTHER THAN 0.6.

Coefficient of Variation for effluent tests

CV = 0.6 (Default 0.6)

δ^2 = 0.3074847
δ = 0.554513029

Using the log variance to develop eA
(P. 100, step 2a of TSD)
Z = 1.881 (97% probability stat from table
A = -0.88929666
eA = 0.410944686

Using the log variance to develop eB
(P. 100, step 2b of TSD)
δ_4^2 = 0.086177696
δ_4 = 0.293560379
B = -0.50909823
eB = 0.601037335

Using the log variance to develop eC
(P. 100, step 4a of TSD)

δ^2 = 0.3074847
δ = 0.554513029
C = 0.889296658
eC = 2.433417525

Using the log variance to develop eD
(P. 100, step 4b of TSD)
n = 1 This number will most likely stay as "1", for 1 sample/month.
δ_n^2 = 0.3074847
δ_n = 0.554513029
D = 0.889296658
eD = 2.433417525

		Vertebrate IC_{25} Data or LC_{50} Data	LN of data		Invertebrate IC_{25} Data or LC_{50} Data	LN of data
		**********			**********	
	1	0		1	0	
	2			2		
	3			3		
	4			4		
	5			5		
	6			6		
	7			7		
	8			8		
	9			9		
	10			10		
	11			11		
	12			12		
	13			13		
	14			14		
	15			15		
	16			16		
	17			17		
	18			18		
	19			19		
	20			20		
St Dev	NEED DATA	NEED DATA	St Dev	NEED DATA	NEED DATA	
Mean	0	0	Mean	0	0	
Variance	0	0.000000	Variance	0	0.000000	
CV	0		CV	0		

Page 3 - Follow directions to develop a site specific ACR (Acute to Chronic Ratio)

To determine Acute/Chronic Ratio (ACR), insert usable data below. Usable data is defined as valid paired test results, acute and chronic, tested at the same temperature, same species. The chronic NOEC must be less than the acute LC_{50}, since the ACR divides the LC_{50} by the NOEC. LC_{50}'s >100% should not be used.

Table 1. ACR using Vertebrate data

Set #	LC_{50}	NOEC	Test ACR	Logarithm	Geomean	Antilog	ACR to Use
1	#N/A	#N/A	#N/A	#N/A	#N/A	#N/A	NO DATA
2	#N/A	#N/A	#N/A	#N/A	#N/A	#N/A	NO DATA
3	#N/A	#N/A	#N/A	#N/A	#N/A	#N/A	NO DATA
4	#N/A	#N/A	#N/A	#N/A	#N/A	#N/A	NO DATA
5	#N/A	#N/A	#N/A	#N/A	#N/A	#N/A	NO DATA
6	#N/A	#N/A	#N/A	#N/A	#N/A	#N/A	NO DATA
7	#N/A	#N/A	#N/A	#N/A	#N/A	#N/A	NO DATA
8	#N/A	#N/A	#N/A	#N/A	#N/A	#N/A	NO DATA
9	#N/A	#N/A	#N/A	#N/A	#N/A	#N/A	NO DATA
10	#N/A	#N/A	#N/A	#N/A	#N/A	#N/A	NO DATA
				ACR for vertebrate data:			0

Table 1. Result:	Vertebrate ACR	0
Table 2. Result:	Invertebrate ACR	0
	Lowest ACR	Default to 10

Table 2. ACR using Invertebrate data

Set #	LC_{50}	NOEC	Test ACR	Logarithm	Geomean	Antilog	ACR to Use
1	#N/A	#N/A	#N/A	#N/A	#N/A	#N/A	NO DATA
2	#N/A	#N/A	#N/A	#N/A	#N/A	#N/A	NO DATA
3	#N/A	#N/A	#N/A	#N/A	#N/A	#N/A	NO DATA
4	#N/A	#N/A	#N/A	#N/A	#N/A	#N/A	NO DATA
5	#N/A	#N/A	#N/A	#N/A	#N/A	#N/A	NO DATA
6	#N/A	#N/A	#N/A	#N/A	#N/A	#N/A	NO DATA
7	#N/A	#N/A	#N/A	#N/A	#N/A	#N/A	NO DATA
8	#N/A	#N/A	#N/A	#N/A	#N/A	#N/A	NO DATA
9	#N/A	#N/A	#N/A	#N/A	#N/A	#N/A	NO DATA
10	#N/A	#N/A	#N/A	#N/A	#N/A	#N/A	NO DATA
				ACR for vertebrate data:			0

Convert LC_{50}'s and NOEC's to Chronic TU's for use in WLA.EXE

Table 3. ACR used: 10

	Enter LC_{50}	TUc	Enter NOEC	TUc
1		NO DATA		NO DATA
2		NO DATA		NO DATA
3		NO DATA		NO DATA
4		NO DATA		NO DATA
5		NO DATA		NO DATA
6		NO DATA		NO DATA
7		NO DATA		NO DATA
8		NO DATA		NO DATA
9		NO DATA		NO DATA
10		NO DATA		NO DATA
11		NO DATA		NO DATA
12		NO DATA		NO DATA
13		NO DATA		NO DATA
14		NO DATA		NO DATA
15		NO DATA		NO DATA
16		NO DATA		NO DATA
17		NO DATA		NO DATA
18		NO DATA		NO DATA
19		NO DATA		NO DATA
20		NO DATA		NO DATA

If WLA.EXE determines that an acute limit is needed, you need to convert the TUc answer you get to TUa and then an LC50, enter it here: NO DATA %LC_{50}

NO DATA TUa

DILUTION SERIES TO RECOMMEND

Table 4.	Monitoring % Effluent	Monitoring TUc	Limit % Effluent	Limit TUc
Dilution series based on data mean	21.9	4.575061		
Dilution series to use for limit			9	11.111111
Dilution factor to recommend:	0.4675215		0.3	
Dilution series to recommend:	100.0	1.00	100.0	1.00
	46.8	2.14	30.0	3.33
	21.9	4.58	9.0	11.11
	10.2	9.79	2.7	37.04
	4.78	20.93	0.8	123.46
Extra dilutions if needed	2.23	44.77	0.2	411.52
	1.04	95.76	0.1	1371.74

Cell: I9
Comment:
This is assuming that the data are Type 2 data (none of the data in the data set are censored - "<" or ">").

Cell: K18
Comment: This is assuming that the data are Type 2 data (none of the data in the data set are censored - "<" or ">").

Cell: J22
Comment: Remember to change the "N" to "Y" if you have ratios entered, otherwise, they won't be used in the calculations.

Cell: C40
Comment:
If you have entered data to calculate an ACR on page 3, and this is still defaulted to "10", make sure you have selected "Y" in cell E21

Cell: C41
Comment: If you have entered data to calculate an effluent specific CV on page 2, and this is still defaulted to "0.6", make sure you have selected "Y" in cell E20

Cell: L48
Comment:
See Row 151 for the appropriate dilution series to use for these NOEC's

Cell: G62
Comment:
Vertebrates are:
Pimephales promelas
Oncorhynchus mykiss
Cyprinodon variegatus

Cell: J62
Comment:
Invertebrates are:
Ceriodaphnia dubia
Mysidopsis bahia

Cell: C117
Comment: Vertebrates are:

Pimephales promelas
Cyprinodon variegatus

Cell: M119
Comment: The ACR has been picked up from cell C34 on Page 1. If you have paired data to calculate an ACR, enter it in the tables to the left, and make sure you have a "Y" in cell E21 on Page 1. Otherwise, the default of 10 will be used to convert your acute data.

Cell: M121
Comment: If you are only concerned with acute data, you can enter it in the NOEC column for conversion and the number calculated will be equivalent to the TUa. The calculation is the same: 100/NOEC = TUc or 100/LC50 = TUa.

Cell: C138
Comment: Invertebrates are:

Ceriodaphnia dubia
Mysidopsis bahia

Model Results
Previous 3/2/95 Mod.
Lower Stroubles Creek STP

COMMONWEALTH OF VIRGINIA
DEPARTMENT OF ENVIRONMENTAL QUALITY

ROANOKE WATER REGIONAL OFFICE

P. O. Box 7017
Roanoke, VA 24019

703/562-3666

MEMORANDUM

Subject: Pepper's Ferry STP (+ Blacksburg → Lower Stroubles Creek STP)
Regional Model Version 3.2 Results

To: File

From: James D. Scott, Environmental Engineer

Date: May 10, 1994

Copies:

Several model (Version 3.2) runs were initiated due to concerns over the Blacksburg-VPI and Pepper's Ferry STP's antidegradation issues concerning DO in the New River.

These model runs did not account for the RAAP facility discharges. Since the RAAP facilities were discharging to the New River in this stretch prior to 1972, the impacts associated with the RAAP discharges were not considered in this analysis of the impacts of the Pepper's Ferry and Blacksburg discharges. Also, please note that the complexities associated with modeling this section of the New River are probably beyond the capabilities of the regional modeling system version 3.2. Nonetheless, I feel that the results are somewhat indicative of the situation we are currently reviewing.

Many runs were made using the "traditional" approach to inputs to the model. Specifically, the entire 7Q10 and the maximum weekly loads were input, and the results showed no DO depletion (i.e. antidegradation is complied with). Several additional runs were made with various fluctuations in loadings. One run used the BOD of 90 mg/l for Pepper's Ferry (9 MD), and 36 mg/l (9 MGD) for Blacksburg, and showed no significant impact to instream DO's.

In light of the fact that the previous model for Blacksburg was run at 1/2 7Q10 due to mixing issues, an additional model was run at a 7Q10 of 307 MGD (7Q10 = 614 MGD). This run was made at a BOD of 45 mg/l (9MGD) for Pepper's Ferry, and 36 mg/l BOD (9MGD) for Blacksburg. Again the model predicted no significant in stream DO depletion, and indicates that antidegradation, **as defined in the Guidance Memo 93-015**, and in terms of BOD, is complied with by allowing Blacksburg to remain at 24 mg/l BOD (9MGD) and allowing Pepper's Ferry to remain at 30 mg/l BOD, monthly average.

****

REGIONAL MODELING SYSTEM VERSION 3.2

DATA FILE SUMMARY

****

MAX LOADS
½ 7Q10

THE NAME OF THE DATA FILE IS: PEPXXX.MOD

THE STREAM NAME IS: NEW RIVER
THE RIVER BASIN IS: NEW RIVER
THE SECTION NUMBER IS: 2a
THE CLASSIFICATION IS: IV

STANDARDS VIOLATED (Y/N) = N
STANDARDS APPROPRIATE (Y/N) = Y

DISCHARGE WITHIN 3 MILES (Y/N) = N

THE DISCHARGE BEING MODELED IS: PEPPER'S FERRY STP

PROPOSED LIMITS ARE:
FLOW = 9 MGD
BOD5 = 45 MG/L
TKN = 10 MG/L
D.O. = 6 MG/L

THE NUMBER OF SEGMENTS TO BE MODELED = 2

7Q10 WILL BE CALCULATED BY: FLOW COMPARISON
THE GAUGE NAME IS: 1/2 WQAP FLOW TABLE
GAUGE DRAINAGE AREA = 2790 SQ.MI.
OBSERVED FLOW AT GAUGE = 307 MGD
GAUGE 7Q10 = 307 MGD
OBSERVED FLOW AT DISCHARGE = 307 MGD

STREAM A DRY DITCH AT DISCHARGE (Y/N) = N
ANTIDEGRADATION APPLIES (Y/N) = Y

ALLOCATION DESIGN TEMPERATURE = 24 ½C

SEGMENT INFORMATION

####### SEGMENT # 1 #######

SEGMENT ENDS BECAUSE: A DISCHARGE ENTERS AT END

SEGMENT LENGTH = 2.175 MI

SEGMENT WIDTH = 150 FT
SEGMENT DEPTH = 5 FT
SEGMENT VELOCITY = 1 FT/SEC

DRAINAGE AREA AT SEGMENT START = 2790 SQ.MI.
DRAINAGE AREA AT SEGMENT END = 2817 SQ.MI.

ELEVATION AT UPSTREAM END = 1725 FT
ELEVATION AT DOWNSTREAM END = 1675 FT

THE CROSS SECTION IS: IRREGULAR
THE CHANNEL IS: MODERATELY MEANDERING

POOLS AND RIFFLES (Y/N) = Y
THE SEGMENT LENGTH IS 75 % POOLS
POOL DEPTH = 6 FT
THE SEGMENT LENGTH IS 25 % RIFFLES
RIFFLE DEPTH = 2 FT

THE BOTTOM TYPE = BOULDERS
SLUDGE DEPOSITS = NONE
AQUATIC PLANTS = FEW
ALGAE OBSERVED = NONE
WATER COLORED GREEN (Y/N) = N

THE DISCHARGE AT THE SEGMENT END IS: BLACKSBURG STP

ITS CONCENTRATIONS ARE:
FLOW = 9 MGD
BOD5 = 36 MG/L
TKN = 15 MG/L
D.O. = 6.6 MG/L

1 1720

2 1716

SEGMENT INFORMATION

####### SEGMENT # 2 #######

SEGMENT ENDS BECAUSE: THE MODEL ENDS

SEGMENT LENGTH = 3 MI

SEGMENT WIDTH = 200 FT
SEGMENT DEPTH = 3 FT
SEGMENT VELOCITY = 1 FT/SEC

DRAINAGE AREA AT SEGMENT START = 2817 SQ.MI.
DRAINAGE AREA AT SEGMENT END = 2862 SQ.MI.

ELEVATION AT UPSTREAM END = 1675 FT
ELEVATION AT DOWNSTREAM END = 1625 FT

THE CROSS SECTION IS: IRREGULAR
THE CHANNEL IS: MODERATELY MEANDERING

POOLS AND RIFFLES (Y/N) = Y
THE SEGMENT LENGTH IS 25 % POOLS
POOL DEPTH = 6 FT
THE SEGMENT LENGTH IS 75 % RIFFLES
RIFFLE DEPTH = 2 FT

THE BOTTOM TYPE = BOULDERS
SLUDGE DEPOSITS = NONE
AQUATIC PLANTS = HEAVY
ALGAE OBSERVED = COVERS ENTIRE BOTTOM
WATER COLORED GREEN (Y/N) = N

****

REGIONAL MODELING SYSTEM Ver 3.2 (OWRM - 9/90)
08-26-1994 15:11:42

********** ********** **********

REGIONAL MODELING SYSTEM VERSION 3.2

****

MODEL SIMULATION FOR THE PEPPER'S FERRY STP DISCHARGE

TO NEW RIVER

COMMENT: MODEL RUN WITHOUT RAAP DISCHARGES

THE SIMULATION STARTS AT THE PEPPER'S FERRY STP DISCHARGE

********** PROPOSED PERMIT LIMITS **********

FLOW = 9 MGD cBOD5 = 45 Mg/L TKN = 10 Mg/L D.O. = 6 Mg/L

**** THE MAXIMUM CHLORINE ALLOWABLE IN THE DISCHARGE IS 0.386 Mg/L ****

THE SECTION BEING MODELED IS BROKEN INTO 2 SEGMENTS
RESULTS WILL BE GIVEN AT 0.1 MILE INTERVALS

********** BACKGROUND CONDITIONS **********

THE 7Q10 STREAM FLOW AT THE DISCHARGE IS 307.00000 MGD
THE DISSOLVED OXYGEN OF THE STREAM IS 7.173 Mg/L
THE BACKGROUND cBODu OF THE STREAM IS 5 Mg/L
THE BACKGROUND nBOD OF THE STREAM IS 0 Mg/L

********** MODEL PARAMETERS **********

SEG.	LEN. Mi	VEL. F/S	K2 1/D	K1 1/D	KN 1/D	BENTHIC Mg/L	ELEV. Ft	TEMP. ½C	DO-SAT Mg/L
1	2.17	1.217	13.793	0.800	0.350	0.000	1700.00	24.00	7.970
2	3.00	0.834	10.000	0.800	0.350	0.000	1650.00	24.00	7.984

(The K Rates shown are at 20½C ... the model corrects them for temperature.)

********** RESPONSE FOR SEGMENT 1 **********

TOTAL STREAMFLOW = 316.0000 MGD
(Including Discharge)

DISTANCE FROM HEAD OF SEGMENT (MI.)	TOTAL DISTANCE FROM MODEL BEGINNING (MI.)	DISSOLVED OXYGEN (Mg/L)	cBODu (Mg/L)	nBODu (Mg/L)
0.000	0.000	7.139	8.062	0.863
0.100	0.100	7.161	8.023	0.861
0.200	0.200	7.173	7.984	0.859
0.300	0.300	7.173	7.946	0.857
0.400	0.400	7.173	7.907	0.855
0.500	0.500	7.173	7.869	0.853
0.600	0.600	7.173	7.832	0.851
0.700	0.700	7.173	7.794	0.849
0.800	0.800	7.173	7.756	0.847
0.900	0.900	7.173	7.719	0.845
1.000	1.000	7.173	7.682	0.843
1.100	1.100	7.173	7.645	0.841
1.200	1.200	7.173	7.608	0.839
1.300	1.300	7.173	7.571	0.837
1.400	1.400	7.173	7.535	0.835
1.500	1.500	7.173	7.498	0.833
1.600	1.600	7.173	7.462	0.831
1.700	1.700	7.173	7.426	0.829
1.800	1.800	7.173	7.391	0.827
1.900	1.900	7.173	7.355	0.825
2.000	2.000	7.173	7.320	0.823
2.100	2.100	7.173	7.284	0.821
2.175	2.175	7.173	7.258	0.820

FOR THE DISCHARGE AT THE END OF SEGMENT 1
DISCHARGER = BLACKSBURG STP
FLOW = 9 MGD cBOD5 = 36 Mg/L TKN = 15 Mg/L D.O. = 6.6 Mg/L

FLOW FROM INCREMENTAL DRAINAGE AREA = 2.9710 MGD

********** RESPONSE FOR SEGMENT 2 **********

TOTAL STREAMFLOW = 327.9710 MGD
(Including Discharge, Tributaries and Incremental D.A. Flow)

DISTANCE FROM HEAD OF SEGMENT (MI.)	TOTAL DISTANCE FROM MODEL BEGINNING (MI.)	DISSOLVED OXYGEN (Mg/L)	cBODu (Mg/L)	nBODu (Mg/L)
0.000	2.175	7.157	9.508	2.215
0.100	2.275	7.149	9.441	2.208
0.200	2.375	7.143	9.375	2.200
0.300	2.475	7.138	9.309	2.192
0.400	2.575	7.133	9.244	2.185
0.500	2.675	7.129	9.179	2.177
0.600	2.775	7.126	9.115	2.170
0.700	2.875	7.124	9.051	2.162
0.800	2.975	7.122	8.987	2.154
0.900	3.075	7.121	8.924	2.147
1.000	3.175	7.121	8.861	2.139
1.100	3.275	7.121	8.799	2.132
1.200	3.375	7.121	8.738	2.125
1.300	3.475	7.122	8.676	2.117
1.400	3.575	7.123	8.615	2.110
1.500	3.675	7.124	8.555	2.102
1.600	3.775	7.126	8.495	2.095
1.700	3.875	7.128	8.435	2.088
1.800	3.975	7.131	8.376	2.080
1.900	4.075	7.133	8.317	2.073
2.000	4.175	7.136	8.259	2.066
2.100	4.275	7.139	8.201	2.059
2.200	4.375	7.142	8.143	2.052
2.300	4.475	7.146	8.086	2.045
2.400	4.575	7.149	8.029	2.037
2.500	4.675	7.153	7.973	2.030
2.600	4.775	7.157	7.917	2.023
2.700	4.875	7.161	7.861	2.016
2.800	4.975	7.165	7.806	2.009
2.900	5.075	7.169	7.751	2.002
3.000	5.175	7.173	7.697	1.995

****

REGIONAL MODELING SYSTEM Ver 3.2 (OWRM - 9/90)
08-26-1994 15:12:29

DATA FILE = PEPXXX.MOD

Attachment E

- **Toxics Management Plan Justification Memorandum**

MEMORANDUM

DEPARTMENT OF ENVIRONMENTAL QUALITY
Blue Ridge Regional Office

3019 Peters Creek Road Roanoke, VA 24019

SUBJECT: TMP Justification for Lower Stroubles Creek WWTP; VPDES Permit No. VA0060844

TO: Permit File

FROM: Kevin A. Harlow, Environmental Engineer Senior

DATE: April 18, 2014

DISCUSSION:

The table on the following page is a compilation of the acute and chronic toxicity testing data during the 2009 permit term. For outfall 001, the facility has completed five annual acute and chronic toxicity testing events using *Ceriodaphnia dubia* and *Pimephales promelas*, respectively. Additionally, chronic toxicity testing was performed using *Ceriodaphnia dubia* was conducted to satisfy the VPDES application requirements. The only test that demonstrated any toxicity was a 2011 chronic test using *Pimephales promelas* in which the TU_C was 3.16 for biomass. A reasonable potential analysis indicated no permit limit was needed.

RECOMMENDATIONS:

The facility should continue annual compliance monitoring using *Ceriodaphnia dubia* for the acute toxicity tests and *Pimephales promelas* for the chronic toxicity tests.

Lower Stroubles Creek WWTP - VA0060844
Whole Effluent Toxicity Data

Chronic - Pimephales promelas

Date_Begin	Date_End	Event	LC50	NOEC	TUc	% Survival in 100% Effluent
9/30/2009	10/7/2009	1st Annual	>100	100	1	97.5
9/28/2010	10/5/2010	2nd Annual	>100	100	1	92.5
10/11/2011	10/18/2011	3rd Annual	>100	31.6	3.16	100
10/16/2012	10/23/2012	4th Annual	>100	100	1	92.5
10/15/2013	10/21/2013	5th Annual	>100	100	1	97.5

Acute - Ceriodaphnia dubia

Date_Begin	Date_End	Event	LC50	TUa	% Survival in 100% Effluent
10/1/2009	10/3/2009	1st Annual	>100	<1	95
9/29/2010	10/1/2010	2nd Annual	>100	<1	100
10/10/2011	10/12/2013	3rd Annual	>100	<1	100
10/17/2012	10/19/2012	4th Annual	>100	<1	100
10/16/2013	10/18/2013	5th Annual	>100	<1	100

Chronic - Ceriodaphnia dubia

Date_Begin	Date_End	Event	NOEC%	% Survival in 100% Effluent
7/30/2012	8/5/2012	1st Application Test	100	100
9/10/2013	9/16/2013	2nd Application Test	100	100
10/15/2013	10/21/2013	3rd Application Test	100	100
11/19/2013	11/25/2013	4th Application Test	100	100