COMMONWEALTH of VIRGINIA

DEPARTMENT OF ENVIRONMENTAL QUALITY

VALLEY REGIONAL OFFICE
4411 Early Road, P.O. Box 3000, Harrisonburg, Virginia 22801
(540) 574-7800 Fax (540) 574-7878
www.deq.virginia.gov

L. Preston Bryant, Jr.
Secretary of Natural Resources

David K. Paylor
Director

Amy Thatcher Owens
Regional Director

August 15, 2007

Mr. Hank Sliwinski, Plants Superintendent
Frederick County Sanitation Authority
P.O. Box 1877
Winchester, VA 22604

Re: VPDES Permit No. VA0075191, Parkins Mills WWTF, Frederick County

Dear Mr. Sliwinski:

Your application has been reviewed and pending EPA concurrence appears to be complete. The next steps involve assembling the information necessary to develop the permit limitations and then drafting the permit. Once the draft permit is prepared and the appropriate reviews are performed, I will transmit the draft permit and supporting documentation to you for review. I expect to have this draft permit package to you by December 31, 2007.

The Department of Environmental Quality strives to complete the permitting process in a timely manner. If you have any questions about our procedures or the status of your draft permit, please do not hesitate to contact us.

Sincerely,

Trevor H. Wallace
Environmental Engineer

cc: Permit Processing File

CONCURRENCES						
Route To:	Originator					
Concurred By:	THW	KBS				
Date:		8/15/07				

Wallace,Trevor

From: Wallace,Trevor
Sent: Monday, December 03, 2007 9:04 AM
To: Wallace,Trevor
Subject: RE: Permit Application Addendum

TO FILE: The applicant replied via phone that the influent is 85% domestic and 15% non-domestic.

Trevor H. Wallace
Environmental Engineer
Virginia DEQ - Valley Regional Office
Tel: 540-574-7807
Fax: 540-574-7878

-----Original Message-----
From: Wallace,Trevor
Sent: Monday, November 19, 2007 10:06 AM
To: 'hsliwinski@fcsa-water.com'
Subject: Permit Application Addendum

Hi Hank,

Sorry to be a little while getting back to you. On the Permit Application Addendum, Item 6 you indicate the 15% of the influent is from domestic sources and 85% is from non-domestic sources. Is this correct, or are these percentages mismatched? Thanks.

Trevor H. Wallace
Environmental Engineer
Virginia DEQ - Valley Regional Office
Tel: 540-574-7807
Fax: 540-574-7878

MEMORANDUM
DEPARTMENT OF ENVIRONMENTAL QUALITY
VALLEY REGIONAL OFFICE

4411 Early Road - P.O. Box 3000 Harrisonburg, VA 22801

SUBJECT: Errata Memo, VPDES Permit No. VA0075191, Parkins Mills WWTF, Frederick County

TO: PP FILE

FROM: Trevor H. Wallace

DATE: August 15, 2007

The following deficiencies have been noted in the subject application for permit reissuance. The application includes the required forms, attachments, correspondence, and this erratum.

VPDES Permit Application Addendum

- Item 5 – The applicant indicated only a 2.0 MGD flow tier is required in the permit, but the current permit includes additional expansion flow tiers. The applicant clarified that 3.0 MGD, 4.0 MGD, and 5.0 MGD flow tiers are also needed in the permit in addition to the 2.0 MGD tier.
- Item 6 – According to the applicant, there are more than 50 private residences served by the WWTF.
- Item 9 – According to the applicant, there have not been any significant changes at the WWTF since the O&M Manual and SMP approval dates.

Form 2A, Part A

- Item 8.b. – According to the applicant, the Stephens Run and Lakeside Surge Basins are man-made flow equalization facilities used to regulate influent flows to the WWTF.
- Item 10 – The watershed name will be verified by DEQ Planning staff during the draft permit development process.
- Item 11.c. – According to the applicant, effluent disinfection is achieved using U.V. light irradiation. Chlorine is used only for biogrowth control in the effluent filters.
- Item 12 – The applicant requested a waiver based on the fact that the data is already on file at DEQ. Effluent daily monitoring logs for the previous permit cycle were also included with the application. The logs include monitoring data for the Item 12 parameters. The waiver request and justification are acceptable.

Form 2A, Part B

- Item 2 - The topographical map submitted with the application is deficient in several areas.
- Item 6 – The outfall number is 001. The applicant requested a waiver based on the fact that the data is already on file at DEQ. Effluent daily monitoring logs for the previous permit cycle were also included with the application. The logs include monitoring data for the Item 6 parameters, with the exception of Oil and Grease and TDS. Data for these two parameters have, however, been previously submitted and are on file at DEQ. The waiver request and justification are acceptable.

Form 2A, Part D

- The applicant requested a waiver based on the fact that the data is already on file at DEQ. This data was previously submitted by the applicant in 2002. The applicant noted that no new significant industrial users have been connected to the system since the 2002 sampling events. Additionally, a full scan of the WQS parameters will be required within one year following CTO issuance for the expanded 5.0 MGD facility, which is scheduled for completion in October 2009. The waiver request and justification are acceptable.

Form 2A, Part E

- The applicant requested a waiver based on the fact that toxicity monitoring data is already on file at DEQ. This data was submitted by the applicant during the previous permit cycle. The waiver request and justification are acceptable.

Form 2A, Part F

- Item 2 – According to DEQ Pretreatment staff, there are "0" CIUs that discharge to the Parkins Mills WWTF.
- Item 9 – According to the applicant, no RCRA waste is or has been received by the facility during the previous three years.

VPDES Sewage Sludge Permit Application Form, Section A

- Item 3.b – "VAL 075191" is the Parkins Mills WWTF EPA sludge reporting number.
- Item 5 - The topographical map submitted with the application is deficient in several areas.

VPDES Sewage Sludge Permit Application Form, Section B

- Item 3.d. – Aerobic digestion is conducted at the WWTF, and this process is known to reduce the vector attraction properties of sewage sludge.
- Items 4, 5, 6, 7, 8, & 9 – should indicate "N/A".

Additional Items

This application was deemed administratively and technically on August 15, 2007 following the receipt of the necessary responses and additional information indicated above and attached. The items noted as deficiencies have been adequately addressed by the permittee, and are now considered to be insignificant in that they will not affect the preparation of a legally and defensible draft permit.

Concurred By _____ Date 8/15/07

FREDERICK COUNTY
SANITATION AUTHORITY

P.O. Box 1877
Winchester, VA 22604-8377

ROBERT P. MOWERY, C.P.A., *Chairman*
JOHN STEVENS, *Vice-chairman*
RICHARD A. RUCKMAN, P.E., *Sec-treasurer*
J. STANLEY CROCKETT
DARWIN S. BRADEN

Wellington H. Jones, P.E.
Engineer-Director

Ph. - (540) 868-1061
Fax - (540) 868-1429

August 10, 2007

Mr. Trevor H. Wallace, Environmental Engineer
Department of Environmental Quality
4411 Early Road
PO BOX 3000
Harrisonburg, Virginia 22801

DEQ-VALLEY
AUG 13 2007
TO: THW
FILE:

RE: Parkins Mills STP VA 0075191 Permit Application

Dear Mr. Wallace:

Enclosed are three certification pages signed by Mr. Jesse W. Moffett, Executive Director, Frederick-Winchester Service Authority. They are Part C. Certification, Section A- page 4/16 and the No Exposure Certification - Item 8 Page 2/3.

Also enclosed is a letter of sludge acceptance for Parkins Mills sludge from Mr. Ron Kimble, Environmental Manager, Frederick County Landfill.

Please let me know if you need any additional information. Thank you for your help with the application.

Sincerely,

H. Sliwinski

Henry F. Sliwinski
Plants Superintendent

FREDERICK COUNTY
SANITATION AUTHORITY

P.O. Box 1877
Winchester, VA 22604-8377

ROBERT P. MOWERY, C.P.A., *Chairman*
JOHN STEVENS, *Vice-chairman*
RICHARD A. RUCKMAN, P.E., *Sec-treasurer*
J. STANLEY CROCKETT
DARWIN S. BRADEN

Wellington H. Jones, P.E.
Engineer-Director

Ph. - (540) 868-1061
Fax - (540) 868-1429

July 18, 2007

DEQ-VALLEY
JUL 19 2007
TO: THW
FILE:

Mr. Trevor H. Wallace, Environmental Engineer
Department of Environmental Quality
4411 Early Road
P.O. Box 3000
Harrisonburg, VA 22801

Re: Parkins Mills STP VA 0075191 permit application and waiver requests

Dear Mr. Wallace:

Please review the enclosed permit application and waiver requests listed below.

Waiver request:
Part A.12. And Part B.6.
Please use previously submitted effluent data for this permit application. All effluent test results for the previous four and one half years are attached.

Waiver request:
Part E. Toxicity Testing Data
Please use previously submitted WET test data for this permit application. Test results for the last four annual sampling events are attached.

Waiver request:
Part D. Expanded Effluent Testing.
All the compounds tested in Part D. in year 2002, except zinc, total phenolic compounds and hardness as CaCO3 were below the detection limit. No new significant industrial users have been connected to the system since the year 2002 sampling events. Most compounds in Part D are in Attachment A.2. of the new Parkins Mills permit and must be tested when the new permit is implemented.

All the compounds tested for in Attachment A.1. of the current permit except chloride were below the detection limit. The test results for Attachment A.1.are enclosed.

Thank you,

H. Sliwinski

Henry F. Sliwinski
Plants Superintendent

DEQ-VALLEY
JUL 19 2007
TO:
FILE:

cc. W.H. Jones FCSA
Tom Eberly VDH

Enclosure

VPDES/VPA Permit Billing Information Form
For Annual Permit Maintenance Fee

Facility Name: Parkins Mills STP

Permit Number: VA 0075191

Tax Payer ID (Federal Identification Number): N/A

Social Security Number if no Tax Payer ID: N/A

Owner Name: Frederick - Winchester Service Authority

Owner Address: P.O. Box 43
Winchester, VA 22604

Billing Contact Name: Jesse W. Moffett

Title: Executive Director

Phone Number: 540 722 3579

E-Mail Address: jmoffett@fredwin.com

PUBLIC NOTICE BILLING INFORMATION

I hereby authorize the Department of Environmental Quality to have the cost of publishing a public notice billed to the Agent/Department identified below. The public notice will be published once a week for two consecutive weeks in the Winchester Star in accordance with 9 VAC 25-31-290.C.2.

Agent/Department to be billed: Frederick County Sanitation Authority

Owner: Frederick - Winchester Service Authority

Agent/Department Address: Frederick County Sanitation Authority
PO Box 1877
Winchester VA 22604

Agent's Telephone No.: 540 868 1061

Printed Name: Henry F. Sliwinski

Authorizing Agent – Signature: H. Sliwinski

Date: 7/13/07

☑ *Please check the box if you have verified with the Winchester Star that you have an acceptable credit account with them.*

VPDES Permit No. VA0075191, Parkins Mills WWTF

Attention Permittee: Please complete the above information and return this form with your application to Trevor Wallace, DEQ-Valley Regional Office, P.O. Box 3000, Harrisonburg, Virginia 22801.

VPDES Permit Application Addendum

1. **Entity to whom the permit is to be issued:** Frederick - Winchester Service Authority
Who will be legally responsible for the wastewater treatment facilities and compliance with the permit? This may or may not be the facility or property owner.

2. **Is this facility located within city or town boundaries?** Y / (N)

3. **What is the tax map parcel number for the land where this facility is located?** 76 A 94A

4. **For the facility to be covered by this permit, how many acres will be disturbed during the next five years due to new construction activities?** 6

5. ALL FACILITIES: **What is the design average flow of this facility?** 2.0 MGD
Industrial facilities: **What is the max. 30-day avg. production level (include units)?** _____

In addition to the above design flow or production level, should the permit be written with limits for any other discharge flow tiers or production levels? Y / (N)

If "Yes", please specify the other flow tiers (in MGD) or production levels: _____
Please consider: Is your facility's design flow considerably greater than your current flow? Do you plan to expand operations during the next five years?

6. **Nature of operations generating wastewater:**

_____

15 % of flow from domestic connections/sources
Number of private residences to be served by the wastewater treatment facilities: __ 0 __ 1-49 __ 50 or more

85 % of flow from non-domestic connections/sources

7. **Mode of discharge:** X Continuous __ Intermittent __ Seasonal
Describe frequency and duration of intermittent or seasonal discharges:

_____

8. **Identify the characteristics of the receiving stream at the point just above the facility's discharge point:**
X Permanent stream, never dry
__ Intermittent stream, usually flowing, sometimes dry
__ Ephemeral stream, wet-weather flow, often dry
__ Effluent-dependent stream, usually or always dry
__ Lake or pond at or below the discharge point
__ Other: _____

9. **Approval Date(s):**
O & M Manual 5/21/97 **Sludge/Solids Management Plan** 3/23/07

Have there been any changes in your operations or procedures since the above approval dates? Y / N

FACILITY NAME AND PERMIT NUMBER:

Form Approved 1/14/99
OMB Number 2040-0086

FORM 2A NPDES

NPDES FORM 2A APPLICATION OVERVIEW

APPLICATION OVERVIEW

Form 2A has been developed in a modular format and consists of a "Basic Application Information" packet and a "Supplemental Application Information" packet. The Basic Application Information packet is divided into two parts. All applicants must complete Parts A and C. Applicants with a design flow greater than or equal to 0.1 mgd must also complete Part B. Some applicants must also complete the Supplemental Application Information packet. The following items explain which parts of Form 2A you must complete.

BASIC APPLICATION INFORMATION:

A. **Basic Application Information for all Applicants.** All applicants must complete questions A.1 through A.8. A treatment works that discharges effluent to surface waters of the United States must also answer questions A.9 through A.12.

B. **Additional Application Information for Applicants with a Design Flow ≥ 0.1 mgd.** All treatment works that have design flows greater than or equal to 0.1 million gallons per day must complete questions B.1 through B.6.

C. **Certification.** All applicants must complete Part C (Certification).

SUPPLEMENTAL APPLICATION INFORMATION:

D. **Expanded Effluent Testing Data.** A treatment works that discharges effluent to surface waters of the United States and meets one or more of the following criteria must complete Part D (Expanded Effluent Testing Data):

1. Has a design flow rate greater than or equal to 1 mgd,
2. Is required to have a pretreatment program (or has one in place), or
3. Is otherwise required by the permitting authority to provide the information.

E. **Toxicity Testing Data.** A treatment works that meets one or more of the following criteria must complete Part E (Toxicity Testing Data):

1. Has a design flow rate greater than or equal to 1 mgd,
2. Is required to have a pretreatment program (or has one in place), or
3. Is otherwise required by the permitting authority to submit results of toxicity testing.

F. **Industrial User Discharges and RCRA/CERCLA Wastes.** A treatment works that accepts process wastewater from any significant industrial users (SIUs) or receives RCRA or CERCLA wastes must complete Part F (Industrial User Discharges and RCRA/CERCLA Wastes). SIUs are defined as:

1. All industrial users subject to Categorical Pretreatment Standards under 40 Code of Federal Regulations (CFR) 403.6 and 40 CFR Chapter I, Subchapter N (see instructions); and
2. Any other industrial user that:
   a. Discharges an average of 25,000 gallons per day or more of process wastewater to the treatment works (with certain exclusions); or
   b. Contributes a process wastestream that makes up 5 percent or more of the average dry weather hydraulic or organic capacity of the treatment plant; or
   c. Is designated as an SIU by the control authority.

G. **Combined Sewer Systems.** A treatment works that has a combined sewer system must complete Part G (Combined Sewer Systems).

ALL APPLICANTS MUST COMPLETE PART C (CERTIFICATION)

FACILITY NAME AND PERMIT NUMBER:
Parkins Mills STP VA0075

Form Approved 1/14/99
OMB Number 2040-0086

BASIC APPLICATION INFORMATION

PART A. BASIC APPLICATION INFORMATION FOR ALL APPLICANTS:

All treatment works must complete questions A.1 through A.8 of this Basic Application Information packet.

A.1. Facility Information.

Facility name: Parkins Mills STP

Mailing Address: P.O. Box 1877
Winchester VA 22604

Contact person: Mr. Henry F. Sliwinski

Title: Plants Superintendent

Telephone number: (540) 662-4475

Facility Address (not P.O. Box): 158 West Parkins Mill Road
Winchester VA 22602

A.2. Applicant Information. If the applicant is different from the above, provide the following:

Applicant name: Frederick - Winchester Service Authority

Mailing Address: P.O. Box 43
Winchester VA 22604

Contact person: Mr. Jesse Moffett

Title: Executive Director

Telephone number: (540) 722-3579

Is the applicant the owner or operator (or both) of the treatment works?

X owner ____ operator

Indicate whether correspondence regarding this permit should be directed to the facility or the applicant.

X facility ____ applicant

A.3. Existing Environmental Permits. Provide the permit number of any existing environmental permits that have been issued to the treatment works (include state-issued permits).

NPDES: VA0075191
UIC: ____
RCRA: ____
PSD: ____
Other: ____
Other: ____

A.4. Collection System Information. Provide information on municipalities and areas served by the facility. Provide the name and population of each entity and, if known, provide information on the type of collection system (combined vs. separate) and its ownership (municipal, private, etc.).

Name	Population Served	Type of Collection System	Ownership
Frederick County	14,443	Separate	Municipal
Stephens City	1,788	Separate	Municipal

Total population served: 16,231

FACILITY NAME AND PERMIT NUMBER:
Parkins Mills STP VA 0075191

Form Approved 1/14/99
OMB Number 2040-0086

A.5. Indian Country.

a. Is the treatment works located in Indian Country?

____ Yes X No

b. Does the treatment works discharge to a receiving water that is either in Indian Country or that is upstream from (and eventually flows through) Indian Country?

____ Yes X No

A.6. Flow. Indicate the design flow rate of the treatment plant (i.e., the wastewater flow rate that the plant was built to handle). Also provide the average daily flow rate and maximum daily flow rate for each of the last three years. Each year's data must be based on a 12-month time period with the 12th month of "this year" occurring no more than three months prior to this application submittal.

a. Design flow rate 2.0 mgd

	Two Years Ago	Last Year	This Year	
b. Annual average daily flow rate	1.84	1.74	1.90	mgd
c. Maximum daily flow rate	5.52	4.95	5.41	mgd

A.7. Collection System. Indicate the type(s) of collection system(s) used by the treatment plant. Check all that apply. Also estimate the percent contribution (by miles) of each.

X Separate sanitary sewer 100 %

____ Combined storm and sanitary sewer ____ %

A.8. Discharges and Other Disposal Methods.

a. Does the treatment works discharge effluent to waters of the U.S.? X Yes ____ No

If yes, list how many of each of the following types of discharge points the treatment works uses:

i. Discharges of treated effluent 1

ii. Discharges of untreated or partially treated effluent 0

iii. Combined sewer overflow points 0

iv. Constructed emergency overflows (prior to the headworks) 0

v. Other ____ 0

b. Does the treatment works discharge effluent to basins, ponds, or other surface impoundments that do not have outlets for discharge to waters of the U.S.? X Yes ____ No

If yes, provide the following for each surface impoundment:

Location: Stephens Run, Lakeside surge basins

Annual average daily volume discharged to surface impoundment(s) 0 mgd

Is discharge ____ continuous or X intermittent?

c. Does the treatment works land-apply treated wastewater? ____ Yes X No

If yes, provide the following for each land application site:

Location: ____

Number of acres: ____

Annual average daily volume applied to site: ____ Mgd

Is land application ____ continuous or ____ intermittent?

d. Does the treatment works discharge or transport treated or untreated wastewater to another treatment works? ____ Yes X No

If yes, describe the mean(s) by which the wastewater from the treatment works is discharged or transported to the other treatment works (e.g., tank truck, pipe).

_____

If transport is by a party other than the applicant, provide:

Transporter name: _____

Mailing Address: _____

_____

Contact person: _____

Title: _____

Telephone number: _____

For each treatment works that receives this discharge, provide the following:

Name: _____

Mailing Address: _____

_____

Contact person: _____

Title: _____

Telephone number: _____

If known, provide the NPDES permit number of the treatment works that receives this discharge. _____

Provide the average daily flow rate from the treatment works into the receiving facility. _____ mgd

e. Does the treatment works discharge or dispose of its wastewater in a manner not included in A.8.a through A.8.d above (e.g., underground percolation, well injection)? _____ Yes X No

If yes, provide the following for each disposal method:

Description of method (including location and size of site(s) if applicable):

_____

Annual daily volume disposed of by this method: _____

Is disposal through this method _____ continuous or _____ intermittent?

FACILITY NAME AND PERMIT NUMBER:
Parkins Mills STP VA 0075191

Form Approved 1/14/99
OMB Number 2040-0086

WASTEWATER DISCHARGES:

If you answered "yes" to question A.8.a, complete questions A.9 through A.12 **once for each outfall** (including bypass points) through which effluent is discharged. Do not include information on combined sewer overflows in this section. **If you answered "no" to question A.8.a**, go to Part B, "Additional Application Information for Applicants with a Design Flow Greater than or Equal to 0.1 mgd."

A.9. Description of Outfall.

a. Outfall number: 001

b. Location: Winchester, VA (City or town, if applicable) — 22602 (Zip Code)
Frederick (County) — VA (State)
36° 06' 27" (Latitude) — 78° 09' 13" (Longitude)

c. Distance from shore (if applicable): N/A ft.

d. Depth below surface (if applicable): <1 ft.

e. Average daily flow rate: 1.90 mgd

f. Does this outfall have either an intermittent or a periodic discharge? ____ Yes X No (go to A.9.g.)

If yes, provide the following information:

Number of times per year discharge occurs: ____

Average duration of each discharge: ____

Average flow per discharge: ____ mgd

Months in which discharge occurs: ____

g. Is outfall equipped with a diffuser? ____ Yes X No

A.10. Description of Receiving Waters.

a. Name of receiving water: Opequon Creek

b. Name of watershed (if known): Opequon

United States Soil Conservation Service 14-digit watershed code (if known): Not known

c. Name of State Management/River Basin (if known): Potomac

United States Geological Survey 8-digit hydrologic cataloging unit code (if known): Not Known

d. Critical low flow of receiving stream (if applicable):
acute .47 cfs chronic .67 cfs

e. Total hardness of receiving stream at critical low flow (if applicable): 301 mg/l of $CaCO_3$

FACILITY NAME AND PERMIT NUMBER:

Parkins Mills STP VA 0075191

Form Approved 1/14/99
OMB Number 2040-0086

A.11. Description of Treatment.

a. What levels of treatment are provided? Check all that apply.

✓ Primary ✓ Secondary

✓ Advanced _____ Other. Describe: _____

b. Indicate the following removal rates (as applicable):

Design BOD_5 removal or Design $CBOD_5$ removal	89	%
Design SS removal	87	%
Design P removal	N/A	%
Design N removal (ammonia)	94	%
Other _____		%

c. What type of disinfection is used for the effluent from this outfall? If disinfection varies by season, please describe.

_____

If disinfection is by chlorination, is dechlorination used for this outfall? ✓ Yes _____ No

d. Does the treatment plant have post aeration? ✓ Yes _____ No

A.12. Effluent Testing Information. All Applicants that discharge to waters of the US must provide effluent testing data for the following parameters. Provide the indicated effluent testing required by the permitting authority for each outfall through which effluent is discharged. Do not include information on combined sewer overflows in this section. All information reported must be based on data collected through analysis conducted using 40 CFR Part 136 methods. In addition, this data must comply with QA/QC requirements of 40 CFR Part 136 and other appropriate QA/QC requirements for standard methods for analytes not addressed by 40 CFR Part 136. At a minimum, effluent testing data must be based on at least three samples and must be no more than four and one-half years apart.

Outfall number: 001 See attached data 1/03 - 6/07

PARAMETER	MAXIMUM DAILY VALUE		AVERAGE DAILY VALUE		
	Value	Units	Value	Units	Number of Samples
pH (Minimum)		s.u.			
pH (Maximum)		s.u.			
Flow Rate					
Temperature (Winter)					
Temperature (Summer)					

* For pH please report a minimum and a maximum daily value

POLLUTANT		MAXIMUM DAILY DISCHARGE		AVERAGE DAILY DISCHARGE			ANALYTICAL METHOD	ML / MDL
		Conc.	Units	Conc.	Units	Number of Samples		
CONVENTIONAL AND NONCONVENTIONAL COMPOUNDS.								
BIOCHEMICAL OXYGEN	BOD-5							
DEMAND (Report one)	CBOD-5							
FECAL COLIFORM								
TOTAL SUSPENDED SOLIDS (TSS)								

END OF PART A.

REFER TO THE APPLICATION OVERVIEW TO DETERMINE WHICH OTHER PARTS OF FORM 2A YOU MUST COMPLETE

FACILITY NAME AND PERMIT NUMBER:

Parkins Mills STP VA 0075191

Form Approved 1/14/99
OMB Number 2040-0086

BASIC APPLICATION INFORMATION

PART B. ADDITIONAL APPLICATION INFORMATION FOR APPLICANTS WITH A DESIGN FLOW GREATER THAN OR EQUAL TO 0.1 MGD (100,000 gallons per day).

All applicants with a design flow rate ≥ 0.1 mgd must answer questions B.1 through B.6. All others go to Part C (Certification).

B.1. Inflow and Infiltration. Estimate the average number of gallons per day that flow into the treatment works from inflow and/or infiltration.

250,000 gpd

Briefly explain any steps underway or planned to minimize inflow and infiltration.

T.V. sewer lines, grout manholes inside and out, slip line trunk lines, rehab laterals

B.2. Topographic Map. Attach to this application a topographic map of the area extending at least one mile beyond facility property boundaries. This map must show the outline of the facility and the following information. (You may submit more than one map if one map does not show the entire area.)

a. The area surrounding the treatment plant, including all unit processes.

b. The major pipes or other structures through which wastewater enters the treatment works and the pipes or other structures through which treated wastewater is discharged from the treatment plant. Include outfalls from bypass piping, if applicable.

c. Each well where wastewater from the treatment plant is injected underground.

d. Wells, springs, other surface water bodies, and drinking water wells that are: 1) within 1/4 mile of the property boundaries of the treatment works, and 2) listed in public record or otherwise known to the applicant.

e. Any areas where the sewage sludge produced by the treatment works is stored, treated, or disposed.

f. If the treatment works receives waste that is classified as hazardous under the Resource Conservation and Recovery Act (RCRA) by truck, rail, or special pipe, show on the map where that hazardous waste enters the treatment works and where it is treated, stored, and/or disposed.

B.3. Process Flow Diagram or Schematic. Provide a diagram showing the processes of the treatment plant, including all bypass piping and all backup power sources or redundancy in the system. Also provide a water balance showing all treatment units, including disinfection (e.g, chlorination and dechlorination). The water balance must show daily average flow rates at influent and discharge points and approximate daily flow rates between treatment units. Include a brief narrative description of the diagram.

B.4. Operation/Maintenance Performed by Contractor(s).

Are any operational or maintenance aspects (related to wastewater treatment and effluent quality) of the treatment works the responsibility of a contractor? X Yes ___ No

If yes, list the name, address, telephone number, and status of each contractor and describe the contractor's responsibilities (attach additional pages if necessary).

Name: See attached list

Mailing Address: _____

Telephone Number: _____

Responsibilities of Contractor: _____

B.5. Scheduled Improvements and Schedules of Implementation. Provide information on any uncompleted implementation schedule or uncompleted plans for improvements that will affect the wastewater treatment, effluent quality, or design capacity of the treatment works. If the treatment works has several different implementation schedules or is planning several improvements, submit separate responses to question B.5 for each. (If none, go to question B.6.)

a. List the outfall number (assigned in question A.9) for each outfall that is covered by this implementation schedule.

001

b. Indicate whether the planned improvements or implementation schedule are required by local, State, or Federal agencies.

X Yes ___ No

FACILITY NAME AND PERMIT NUMBER:

Parkins Mills STP VA 0075191

Form Approved 1/14/99
OMB Number 2040-0086

c If the answer to B.5.b is "Yes," briefly describe, including new maximum daily inflow rate (if applicable).

5.0 MGD ENR Treatment Plant Upgrade

d. Provide dates imposed by any compliance schedule or any actual dates of completion for the implementation steps listed below, as applicable. For improvements planned independently of local, State, or Federal agencies, indicate planned or actual completion dates, as applicable. Indicate dates as accurately as possible.

Implementation Stage	Schedule MM / DD / YYYY	Actual Completion MM / DD / YYYY
– Begin construction	3 / 12 / 07	3 / 12 / 07
– End construction	10 / 9 / 09	__/__/____
– Begin discharge	__/__/____	__/__/____
– Attain operational level	__/__/____	__/__/____

e. Have appropriate permits/clearances concerning other Federal/State requirements been obtained? ✓ Yes ____No

Describe briefly: DEQ approval

B.6. EFFLUENT TESTING DATA (GREATER THAN 0.1 MGD ONLY).

Applicants that discharge to waters of the US must provide effluent testing data for the following parameters. Provide the indicated effluent testing required by the permitting authority for each outfall through which effluent is discharged. Do not include information on combined sewer overflows in this section. All information reported must be based on data collected through analysis conducted using 40 CFR Part 136 methods. In addition, this data must comply with QA/QC requirements of 40 CFR Part 136 and other appropriate QA/QC requirements for standard methods for analytes not addressed by 40 CFR Part 136. At a minimum, effluent testing data must be based on at least three pollutant scans and must be no more than four and one-half years old.

Outfall Number:_____

POLLUTANT	MAXIMUM DAILY DISCHARGE		AVERAGE DAILY DISCHARGE			ANALYTICAL METHOD	ML / MDL
	Conc.	Units	Conc.	Units	Number of Samples		
CONVENTIONAL AND NONCONVENTIONAL COMPOUNDS.							
AMMONIA (as N)	see	reports					
CHLORINE (TOTAL RESIDUAL, TRC)							
DISSOLVED OXYGEN							
TOTAL KJELDAHL NITROGEN (TKN)							
NITRATE PLUS NITRITE NITROGEN							
OIL and GREASE							
PHOSPHORUS (Total)							
TOTAL DISSOLVED SOLIDS (TDS)							
OTHER							

END OF PART B.
REFER TO THE APPLICATION OVERVIEW TO DETERMINE WHICH OTHER PARTS OF FORM 2A YOU MUST COMPLETE

FACILITY NAME AND PERMIT NUMBER:
Parkins Mills STP VA 0075191

Form Approved 1/14/99
OMB Number 2040-0086

BASIC APPLICATION INFORMATION

PART C. CERTIFICATION

All applicants must complete the Certification Section. Refer to instructions to determine who is an officer for the purposes of this certification. All applicants must complete all applicable sections of Form 2A, as explained in the Application Overview. Indicate below which parts of Form 2A you have completed and are submitting. By signing this certification statement, applicants confirm that they have reviewed Form 2A and have completed all sections that apply to the facility for which this application is submitted.

Indicate which parts of Form 2A you have completed and are submitting:

X Basic Application Information packet

Supplemental Application Information packet:

____ Part D (Expanded Effluent Testing Data)

____ Part E (Toxicity Testing: Biomonitoring Data)

X Part F (Industrial User Discharges and RCRA/CERCLA Wastes)

____ Part G (Combined Sewer Systems)

ALL APPLICANTS MUST COMPLETE THE FOLLOWING CERTIFICATION.

I certify under penalty of law that this document and all attachments were prepared under my direction or supervision in accordance with a system designed to assure that qualified personnel properly gather and evaluate the information submitted. Based on my inquiry of the person or persons who manage the system or those persons directly responsible for gathering the information, the information is, to the best of my knowledge and belief, true, accurate, and complete. I am aware that there are significant penalties for submitting false information, including the possibility of fine and imprisonment for knowing violations.

Name and official title: Jesse W. Moffett, Executive Director

Signature: [signature]

Telephone number: 540 722 3579

Date signed: 8/2/07

Upon request of the permitting authority, you must submit any other information necessary to assess wastewater treatment practices at the treatment works or identify appropriate permitting requirements.

SEND COMPLETED FORMS TO:

DEQ-VALLEY
AUG 13 2007
TO: _____
FILE: _____

FACILITY NAME AND PERMIT NUMBER:
Parkins Mills STP VA 0076191

Form Approved 1/14/99
OMB Number 2040-0086

SUPPLEMENTAL APPLICATION INFORMATION

PART D. EXPANDED EFFLUENT TESTING DATA

Refer to the directions on the cover page to determine whether this section applies to the treatment works.

Effluent Testing: 1.0 mgd and Pretreatment Treatment Works. If the treatment works has a design flow greater than or equal to 1.0 mgd or it has (or is required to have) a pretreatment program, or is otherwise required by the permitting authority to provide the data, then provide effluent testing data for the following pollutants. Provide the indicated effluent testing information and any other information required by the permitting authority for each outfall through which effluent is discharged. Do not include information on combined sewer overflows in this section. All information reported must be based on data collected through analyses conducted using 40 CFR Part 136 methods. In addition, these data must comply with QA/QC requirements of 40 CFR Part 136 and other appropriate QA/QC requirements for standard methods for analytes not addressed by 40 CFR Part 136. Indicate in the blank rows provided below any data you may have on pollutants not specifically listed in this form. At a minimum, effluent testing data must be based on at least three pollutant scans and must be no more than four and one-half years old.

Outfall number: _____ (Complete once for each outfall discharging effluent to waters of the United States.)

POLLUTANT	MAXIMUM DAILY DISCHARGE				AVERAGE DAILY DISCHARGE					ANALYTICAL METHOD	ML/ MDL
	Conc.	Units	Mass	Units	Conc.	Units	Mass	Units	Number of Samples		
METALS (TOTAL RECOVERABLE), CYANIDE, PHENOLS, AND HARDNESS.											
ANTIMONY											
ARSENIC											
BERYLLIUM											
CADMIUM											
CHROMIUM											
COPPER											
LEAD											
MERCURY											
NICKEL											
SELENIUM											
SILVER											
THALLIUM											
ZINC											
CYANIDE											
TOTAL PHENOLIC COMPOUNDS											
HARDNESS (AS $CaCO_3$)											
Use this space (or a separate sheet) to provide information on other metals requested by the permit writer.											

FACILITY NAME AND PERMIT NUMBER:

Parkins Mills STP VA 0075191

Form Approved 1/14/99
OMB Number 2040-0086

Outfall number: _____ (Complete once for each outfall discharging effluent to waters of the United States.)

POLLUTANT	MAXIMUM DAILY DISCHARGE				AVERAGE DAILY DISCHARGE					ANALYTICAL METHOD	ML/ MDL
	Conc.	Units	Mass	Units	Conc.	Units	Mass	Units	Number of Samples		
VOLATILE ORGANIC COMPOUNDS.											
ACROLEIN											
ACRYLONITRILE											
BENZENE											
BROMOFORM											
CARBON TETRACHLORIDE											
CLOROBENZENE											
CHLORODIBROMO-METHANE											
CHLOROETHANE											
2-CHLORO-ETHYLVINYL ETHER											
CHLOROFORM											
DICHLOROBROMO-METHANE											
1,1-DICHLOROETHANE											
1,2-DICHLOROETHANE											
TRANS-1,2-DICHLORO-ETHYLENE											
1,1-DICHLOROETHYLENE											
1,2-DICHLOROPROPANE											
1,3-DICHLORO-PROPYLENE											
ETHYLBENZENE											
METHYL BROMIDE											
METHYL CHLORIDE											
METHYLENE CHLORIDE											
1,1,2,2-TETRACHLORO-ETHANE											
TETRACHLORO-ETHYLENE											
TOLUENE											

FACILITY NAME AND PERMIT NUMBER:
Parkins Mills STP VA 0075191

Form Approved 1/14/99
OMB Number 2040-0086

Outfall number: _____ (Complete once for each outfall discharging effluent to waters of the United States.)

POLLUTANT	MAXIMUM DAILY DISCHARGE				AVERAGE DAILY DISCHARGE					ANALYTICAL METHOD	ML/ MDL
	Conc.	Units	Mass	Units	Conc.	Units	Mass	Units	Number of Samples		
1,1,1-TRICHLOROETHANE											
1,1,2-TRICHLOROETHANE											
TRICHLORETHYLENE											
VINYL CHLORIDE											
Use this space (or a separate sheet) to provide information on other volatile organic compounds requested by the permit writer.											
ACID-EXTRACTABLE COMPOUNDS											
P-CHLORO-M-CRESOL											
2-CHLOROPHENOL											
2,4-DICHLOROPHENOL											
2,4-DIMETHYLPHENOL											
4,6-DINITRO-O-CRESOL											
2,4-DINITROPHENOL											
2-NITROPHENOL											
4-NITROPHENOL											
PENTACHLOROPHENOL											
PHENOL											
2,4,6-TRICHLOROPHENOL											
Use this space (or a separate sheet) to provide information on other acid-extractable compounds requested by the permit writer.											
BASE-NEUTRAL COMPOUNDS.											
ACENAPHTHENE											
ACENAPHTHYLENE											
ANTHRACENE											
BENZIDINE											
BENZO(A)ANTHRACENE											

BENZO(A)PYRENE											

FACILITY NAME AND PERMIT NUMBER:
Perkins Mills STP VA 0076191

Form Approved 1/14/99
OMB Number 2040-0086

Outfall number: _____ (Complete once for each outfall discharging effluent to waters of the United States.)

POLLUTANT	MAXIMUM DAILY DISCHARGE				AVERAGE DAILY DISCHARGE					ANALYTICAL METHOD	ML/ MDL
	Conc.	Units	Mass	Units	Conc.	Units	Mass	Units	Number of Samples		
3,4 BENZO-FLUORANTHENE											
BENZO(GHI)PERYLENE											
BENZO(K)FLUORANTHENE											
BIS (2-CHLOROETHOXY) METHANE											
BIS (2-CHLOROETHYL)-ETHER											
BIS (2-CHLOROISO-PROPYL) ETHER											
BIS (2-ETHYLHEXYL) PHTHALATE											
4-BROMOPHENYL PHENYL ETHER											
BUTYL BENZYL PHTHALATE											
2-CHLORONAPHTHALENE											
4-CHLORPHENYL PHENYL ETHER											
CHRYSENE											
DI-N-BUTYL PHTHALATE											
DI-N-OCTYL PHTHALATE											
DIBENZO(A,H) ANTHRACENE											
1,2-DICHLOROBENZENE											
1,3-DICHLOROBENZENE											
1,4-DICHLOROBENZENE											
3,3-DICHLOROBENZIDINE											
DIETHYL PHTHALATE											
DIMETHYL PHTHALATE											
2,4-DINITROTOLUENE											
2,6-DINITROTOLUENE											

1,2-DIPHENYLHYDRAZINE											

FACILITY NAME AND PERMIT NUMBER:
Parkins Mills STP VA 0075191

Form Approved 1/14/99
OMB Number 2040-0086

Outfall number: _____ (Complete once for each outfall discharging effluent to waters of the United States.)

POLLUTANT	MAXIMUM DAILY DISCHARGE				AVERAGE DAILY DISCHARGE					ANALYTICAL METHOD	ML/ MDL
	Conc.	Units	Mass	Units	Conc.	Units	Mass	Units	Number of Samples		
FLUORANTHENE											
FLUORENE											
HEXACHLOROBENZENE											
HEXACHLOROBUTADIENE											
HEXACHLOROCYCLO-PENTADIENE											
HEXACHLOROETHANE											
INDENO(1,2,3-CD)PYRENE											
ISOPHORONE											
NAPHTHALENE											
NITROBENZENE											
N-NITROSODI-N-PROPYLAMINE											
N-NITROSODI- METHYLAMINE											
N-NITROSODI-PHENYLAMINE											
PHENANTHRENE											
PYRENE											
1,2,4-TRICHLOROBENZENE											

Use this space (or a separate sheet) to provide information on other base-neutral compounds requested by the permit writer.

Use this space (or a separate sheet) to provide information on other pollutants (e.g., pesticides) requested by the permit writer.

END OF PART D.
REFER TO THE APPLICATION OVERVIEW TO DETERMINE WHICH OTHER PARTS OF FORM 2A YOU MUST COMPLETE

FACILITY NAME AND PERMIT NUMBER:
Parkins Mills STP VA 0075191

Form Approved 1/14/99
OMB Number 2040-0086

SUPPLEMENTAL APPLICATION INFORMATION

PART E. TOXICITY TESTING DATA

POTWs meeting one or more of the following criteria must provide the results of whole effluent toxicity tests for acute or chronic toxicity for each of the facility's discharge points: 1) POTWs with a design flow rate greater than or equal to 1.0 mgd; 2) POTWs with a pretreatment program (or those that are required to have one under 40 CFR Part 403); or 3) POTWs required by the permitting authority to submit data for these parameters.

- At a minimum, these results must include quarterly testing for a 12-month period within the past 1 year using multiple species (minimum of two species), or the results from four tests performed at least annually in the four and one-half years prior to the application, provided the results show no appreciable toxicity, and testing for acute and/or chronic toxicity, depending on the range of receiving water dilution. Do not include information on combined sewer overflows in this section. All information reported must be based on data collected through analysis conducted using 40 CFR Part 136 methods. In addition, this data must comply with QA/QC requirements of 40 CFR Part 136 and other appropriate QA/QC requirements for standard methods for analytes not addressed by 40 CFR Part 136.
- In addition, submit the results of any other whole effluent toxicity tests from the past four and one-half years. If a whole effluent toxicity test conducted during the past four and one-half years revealed toxicity, provide any information on the cause of the toxicity or any results of a toxicity reduction evaluation, if one was conducted.
- If you have already submitted any of the information requested in Part E, you need not submit it again. Rather, provide the information requested in question E.4 for previously submitted information. If EPA methods were not used, report the reasons for using alternate methods. If test summaries are available that contain all of the information requested below, they may be submitted in place of Part E.

If no biomonitoring data is required, do not complete Part E. Refer to the Application Overview for directions on which other sections of the form to complete.

E.1. Required Tests.

Indicate the number of whole effluent toxicity tests conducted in the past four and one-half years.

4 chronic 4 acute

E.2. Individual Test Data. Complete the following chart for each whole effluent toxicity test conducted in the last four and one-half years. Allow one column per test (where each species constitutes a test). Copy this page if more than three tests are being reported.

	Test number:_____	Test number:_____	Test number:_____
a. Test information. See waiver request and Summary data attached			
Test species & test method number			
Age at initiation of test			
Outfall number			
Dates sample collected			
Date test started			
Duration			
b. Give toxicity test methods followed.			
Manual title			
Edition number and year of publication			
Page number(s)			
c. Give the sample collection method(s) used. For multiple grab samples, indicate the number of grab samples used.			
24-Hour composite			
Grab			
d. Indicate where the sample was taken in relation to disinfection. (Check all that apply for each)			
Before disinfection			
After disinfection			
After dechlorination			

FACILITY NAME AND PERMIT NUMBER:
Parkins Mills STP VA0075191

Form Approved 1/14/99
OMB Number 2040-0086

	Test number:_____	Test number:_____	Test number:_____
e. Describe the point in the treatment process at which the sample was collected.			
Sample was collected:			
f. For each test, include whether the test was intended to assess chronic toxicity, acute toxicity, or both.			
Chronic toxicity			
Acute toxicity			
g. Provide the type of test performed.			
Static			
Static-renewal			
Flow-through			
h. Source of dilution water. If laboratory water, specify type; if receiving water, specify source.			
Laboratory water			
Receiving water			
i. Type of dilution water. It salt water, specify "natural" or type of artificial sea salts or brine used.			
Fresh water			
Salt water			
j. Give the percentage effluent used for all concentrations in the test series.			
k. Parameters measured during the test. (State whether parameter meets test method specifications)			
pH			
Salinity			
Temperature			
Ammonia			
Dissolved oxygen			
l. Test Results.			
Acute:			
Percent survival in 100% effluent	%	%	%
LC_{50}			
95% C.I.	%	%	%
Control percent survival	%	%	%
Other (describe)			

FACILITY NAME AND PERMIT NUMBER:
Parkins Mills STP VA 0025191

Form Approved 1/14/99
OMB Number 2040-0086

Chronic:			
NOEC	%	%	%
IC_{25}	%	%	%
Control percent survival	%	%	%
Other (describe)			
m. Quality Control/Quality Assurance.			
Is reference toxicant data available?			
Was reference toxicant test within acceptable bounds?			
What date was reference toxicant test run (MM/DD/YYYY)?			
Other (describe)			

E.3. Toxicity Reduction Evaluation. Is the treatment works involved in a Toxicity Reduction Evaluation?

____Yes ____No If yes, describe: _____

_____

_____

E.4. Summary of Submitted Biomonitoring Test Information. If you have submitted biomonitoring test information, or information regarding the cause of toxicity, within the past four and one-half years, provide the dates the information was submitted to the permitting authority and a summary of the results.

Date submitted: _____ (MM/DD/YYYY)

Summary of results: (see instructions)

_____

_____

END OF PART E.
REFER TO THE APPLICATION OVERVIEW TO DETERMINE WHICH OTHER PARTS OF FORM 2A YOU MUST COMPLETE.

FACILITY NAME AND PERMIT NUMBER:
Parkins Mills STP VA 0075191

Form Approved 1/14/99
OMB Number 2040-0086

SUPPLEMENTAL APPLICATION INFORMATION

PART F. INDUSTRIAL USER DISCHARGES AND RCRA/CERCLA WASTES

All treatment works receiving discharges from significant industrial users or which receive RCRA, CERCLA, or other remedial wastes must complete Part F.

GENERAL INFORMATION:

F.1. Pretreatment Program. Does the treatment works have, or is it subject to, an approved pretreatment program?

X Yes ___ No

F.2. Number of Significant Industrial Users (SIUs) and Categorical Industrial Users (CIUs). Provide the number of each of the following types of industrial users that discharge to the treatment works.

a. Number of non-categorical SIUs. 1

b. Number of CIUs. 1

SIGNIFICANT INDUSTRIAL USER INFORMATION:

Supply the following information for each SIU. If more than one SIU discharges to the treatment works, copy questions F.3 through F.8 and provide the information requested for each SIU.

F.3. Significant Industrial User Information. Provide the name and address of each SIU discharging to the treatment works. Submit additional pages as necessary.

Name: H. P. Hood, Inc.

Mailing Address: 160 Hood Way
Winchester, VA 22602

F.4. Industrial Processes. Describe all of the industrial processes that affect or contribute to the SIU's discharge.

dairy processing facility, waste milk

F.5. Principal Product(s) and Raw Material(s). Describe all of the principal processes and raw materials that affect or contribute to the SIU's discharge.

Principal product(s): flavored milk, serving size 16 oz., creamer, half & half

Raw material(s): raw milk, flavorings, sucrose, corn syrup, vegetable oils

F.6. Flow Rate.

a. Process wastewater flow rate. Indicate the average daily volume of process wastewater discharged into the collection system in gallons per day (gpd) and whether the discharge is continuous or intermittent.

330,000 gpd (___ continuous or X intermittent)

b. Non-process wastewater flow rate. Indicate the average daily volume of non-process wastewater flow discharged into the collection system in gallons per day (gpd) and whether the discharge is continuous or intermittent.

n/a gpd (___ continuous or X intermittent)

everything goes through a flow meter

F.7. Pretreatment Standards. Indicate whether the SIU is subject to the following:

a. Local limits X Yes ___ No

b. Categorical pretreatment standards ___ Yes X No

If subject to categorical pretreatment standards, which category and subcategory?

___

FACILITY NAME AND PERMIT NUMBER:

Parkins Mills STP VA 0075191

Form Approved 1/14/99
OMB Number 2040-0086

F.8. Problems at the Treatment Works Attributed to Waste Discharged by the SIU. Has the SIU caused or contributed to any problems (e.g., upsets, interference) at the treatment works in the past three years?

X Yes ___ No If yes, describe each episode.

loss of solids causing solids handling problems at Parkins Mills STP

RCRA HAZARDOUS WASTE RECEIVED BY TRUCK, RAIL, OR DEDICATED PIPELINE:

F.9. RCRA Waste. Does the treatment works receive or has it in the past three years received RCRA hazardous waste by truck, rail, or dedicated pipe?

____Yes ___No (go to F.12.)

F.10. Waste Transport. Method by which RCRA waste is received (check all that apply):

_____Truck _____Rail _____Dedicated Pipe

F.11. Waste Description. Give EPA hazardous waste number and amount (volume or mass, specify units).

EPA Hazardous Waste Number	Amount	Units

CERCLA (SUPERFUND) WASTEWATER, RCRA REMEDIATION/CORRECTIVE ACTION WASTEWATER, AND OTHER REMEDIAL ACTIVITY WASTEWATER:

F.12. Remediation Waste. Does the treatment works currently (or has it been notified that it will) receive waste from remedial activities?

____Yes (complete F.13 through F.15.) X No

Provide a list of sites and the requested information (F.13 - F.15.) for each current and future site.

F.13. Waste Origin. Describe the site and type of facility at which the CERCLA/RCRA/or other remedial waste originates (or is expected to originate in the next five years).

F.14. Pollutants. List the hazardous constituents that are received (or are expected to be received). Include data on volume and concentration, if known. (Attach additional sheets if necessary).

F.15. Waste Treatment.

a. Is this waste treated (or will it be treated) prior to entering the treatment works?

____Yes ____No

If yes, describe the treatment (provide information about the removal efficiency):

b. Is the discharge (or will the discharge be) continuous or intermittent?

____Continuous ____Intermittent If intermittent, describe discharge schedule.

END OF PART F.

REFER TO THE APPLICATION OVERVIEW TO DETERMINE WHICH OTHER PARTS OF FORM 2A YOU MUST COMPLETE

FACILITY NAME AND PERMIT NUMBER:
Parkins Mills STP VA 0075191

Form Approved 1/14/99
OMB Number 2040-0086

SUPPLEMENTAL APPLICATION INFORMATION

PART G. COMBINED SEWER SYSTEMS

If the treatment works has a combined sewer system, complete Part G.

G.1. System Map. Provide a map indicating the following: (may be included with Basic Application Information)

a. All CSO discharge points.

b. Sensitive use areas potentially affected by CSOs (e.g., beaches, drinking water supplies, shellfish beds, sensitive aquatic ecosystems, and outstanding natural resource waters).

c. Waters that support threatened and endangered species potentially affected by CSOs.

G.2. System Diagram. Provide a diagram, either in the map provided in G.1. or on a separate drawing, of the combined sewer collection system that includes the following information:

a. Locations of major sewer trunk lines, both combined and separate sanitary.

b. Locations of points where separate sanitary sewers feed into the combined sewer system.

c. Locations of in-line and off-line storage structures.

d. Locations of flow-regulating devices.

e. Locations of pump stations.

CSO OUTFALLS:

Complete questions G.3 through G.6 once for each CSO discharge point.

G.3. Description of Outfall.

a. Outfall number _____

b. Location _____
(City or town, if applicable) (Zip Code)

_____
(County) (State)

_____
(Latitude) (Longitude)

c. Distance from shore (if applicable) _____ft.

d. Depth below surface (if applicable) _____ft.

e. Which of the following were monitored during the last year for this CSO?

____Rainfall ____CSO pollutant concentrations ____CSO frequency

____CSO flow volume ____Receiving water quality

f. How many storm events were monitored during the last year? _____

G.4. CSO Events.

a. Give the number of CSO events in the last year.

_____ events (___ actual or ___ approx.)

b. Give the average duration per CSO event.

_____ hours (____ actual or ____ approx.)

FACILITY NAME AND PERMIT NUMBER:

Parkins Mills STP VA 0075191

Form Approved 1/14/99
OMB Number 2040-0086

c. Give the average volume per CSO event.

_____ million gallons (_____ actual or _____ approx.)

d. Give the minimum rainfall that caused a CSO event in the last year.

_____ inches of rainfall

G.5. Description of Receiving Waters.

a. Name of receiving water: _____

b. Name of watershed/river/stream system: _____

United States Soil Conservation Service 14-digit watershed code (if known): _____

c. Name of State Management/River Basin: _____

United States Geological Survey 8-digit hydrologic cataloging unit code (if known): _____

G.6. CSO Operations.

Describe any known water quality impacts on the receiving water caused by this CSO (e.g., permanent or intermittent beach closings, permanent or intermittent shell fish bed closings, fish kills, fish advisories, other recreational loss, or violation of any applicable State water quality standard).

_____

_____

END OF PART G.
REFER TO THE APPLICATION OVERVIEW TO DETERMINE WHICH OTHER PARTS OF FORM 2A YOU MUST COMPLETE.

FACILITY NAME: Parkins Mill STP VPDES PERMIT NUMBER: VA 0075191

VPDES SEWAGE SLUDGE PERMIT APPLICATION FORM

SCREENING INFORMATION

This application is divided into sections. Sections A pertain to all applicants. The applicability of Sections B, C and D depend on your facility's sewage sludge use or disposal practices. The information provided on this page will help you determine which sections to fill out.

1. All applicants must complete Section A (General Information).

2. Will this facility generate sewage sludge? X Yes __No

   Will this facility derive a material from sewage sludge? __Yes X No

   If you answered Yes to either, complete Section B (Generation Of Sewage Sludge Or Preparation Of A Material Derived From Sewage Sludge).

3. Will this facility apply sewage sludge to the land? __Yes X No

   Will sewage sludge from this facility be applied to the land? __Yes X No

   If you answered No to both questions above, skip Section C.

   If you answered Yes to either, answer the following three questions:

   a. Will the sewage sludge from this facility meet the ceiling concentrations, pollutant concentrations, Class A pathogen reduction requirements and one of the vector attraction reduction requirements 1-8, as identified in the instructions?
   __Yes __No

   b. Will sewage sludge from this facility be placed in a bag or other container for sale or give-away for application to the land? __Yes __No

   c. Will sewage sludge from this facility be sent to another facility for treatment or blending? __Yes __No

   If you answered No to all three, complete Section C (Land Application Of Bulk Sewage Sludge).

   If you answered Yes to a, b or c, skip Section C.

4. Do you own or operate a surface disposal site? __Yes X No

   If Yes, complete Section D (Surface Disposal).

FACILITY NAME: Parkins Mills STP VP PERMIT NUMBER: VA 0075191

SECTION A. GENERAL INFORMATION

All applicants must complete this section.

1. Facility Information.
   a. Facility name: Parkins Mills STP
   b. Contact person: Henry F. Sliwinski
      Title: Superintendent
      Phone: (540) 662 4475
   c. Mailing address:
      Street or P.O. Box: PO Box 1877
      City or Town: Winchester State: VA Zip: 22604
   d. Facility location:
      Street or Route #: 158 West Parkins Mill Rd
      County: Frederick
      City or Town: Winchester State: VA Zip: 22602
   e. Is this facility a Class I sludge management facility? X Yes __ No
   f. Facility design flow rate: 2.0 MGD mgd
   g. Total population served: 16,231
   h. Indicate the type of facility:
      X Publicly owned treatment works (POTW)
      __ Privately owned treatment works
      __ Federally owned treatment works
      __ Blending or treatment operation
      __ Surface disposal site
      __ Other (describe): _____

2. Applicant Information. If the applicant is different from the above, provide the following:
   a. Applicant name: Frederick - Winchester Service Authority
   b. Mailing address:
      Street or P.O. Box: PO Box 43
      City or Town: Winchester State: VA Zip: 22604
   c. Contact person: Jesse Moffett
      Title: Executive Director
      Phone: (540) 722 3579
   d. Is the applicant the owner or operator (or both) of this facility?
      X owner ____ operator
   e. Should correspondence regarding this permit be directed to the facility or the applicant? (Check one)
      X facility ____ applicant

3. Permit Information.
   a. Facility's VPDES permit number (if applicable): VA 0075191
   b. List on this form or an attachment, all other federal, state or local permits or construction approvals received or applied for that regulate this facility's sewage sludge management practices:

Permit Number:	Type of Permit:
VAL 075191	Sludge discharge report to EPA

4. Indian Country. Does any generation, treatment, storage, application to land or disposal of sewage sludge from this facility occur in Indian Country? __ Yes X No If yes, describe:

_____

FACILITY NAME: Parkins Mills STP

V ES PERMIT NUMBER: VA 0075191

5. Topographic Map. Provide a topographic map or maps (or other appropriate maps if a topographic map is unavailable) that shows the following information. Maps should include the area one mile beyond all property boundaries of the facility:
   a. Location of all sewage sludge management facilities, including locations where sewage sludge is generated, stored, treated, or disposed.
   b. Location of all wells, springs, and other surface water bodies listed in public records or otherwise known to the applicant within 1/4 mile of the property boundaries.

6. Line Drawing. Provide a line drawing and/or a narrative description that identifies all sewage sludge processes that will be employed during the term of the permit including all processes used for collecting, dewatering, storing, or treating sewage sludge, the destination(s) of all liquids and solids leaving each unit, and all methods used for pathogen reduction and vector attraction reduction.

7. Contractor Information. Are any operational or maintenance aspects of this facility related to sewage sludge generation, treatment, use or disposal the responsibility of a contractor? __ Yes X No
   If yes, provide the following for each contractor (attach additional pages if necessary).
   Name: See list
   Mailing address:
   Street or P.O. Box: _____
   City or Town: _____ State: _____ Zip: _____
   Phone: ( ) _____
   Contractor's Federal, State or Local Permit Number(s) applicable to this facility's sewage sludge:
   _____
   If the contractor is responsible for the use and/or disposal of the sewage sludge, provide a description of the service to be provided to the applicant and the respective obligations of the applicant and the contractor(s).

8. Pollutant Concentrations. Using the table below or a separate attachment, provide sewage sludge monitoring data for the pollutants which limits in sewage sludge have been established in 9 VAC 25-31-10 et seq. for this facility's expected use or disposal practices. All data must be based on three or more samples taken at least one month apart and must be no more than four and one-half years old.

POLLUTANT	CONCENTRATION (mg/kg dry weight)	SAMPLE DATE	ANALYTICAL METHOD	DETECTION LEVEL FOR ANALYSIS
Arsenic	see reports			
Cadmium				
Chromium				
Copper				
Lead				
Mercury				
Molybdenum				
Nickel				
Selenium				
Zinc				

9. Certification. Read and submit the following certification statement with this application. Refer to the instructions to determine who is an officer for purposes of this certification. Indicate which parts of the application you have completed and are submitting:

   X Section A (General Information)
   X Section B (Generation of Sewage Sludge or Preparation of a Material Derived from Sewage Sludge)
   ___ Section C (Land Application of Bulk Sewage Sludge)
   ___ Section D (Surface Disposal)

FACILITY NAME: Parkins Mills STP **VPDES PERMIT NUMBER:** VA 0075191

I certify under penalty of law that this document and all attachments were prepared under my direction or supervision in accordance with a system designed to assure that qualified personnel properly gather and evaluate the information submitted. Based on my inquiry of the person or persons who manage the system or those persons directly responsible for gathering the information, the information is, to the best of my knowledge and belief, true, accurate and complete. I am aware that there are significant penalties for submitting false information, including the possibility of fine and imprisonment for knowing violations.

Name and official title Jesse W. Moffett, Executive Director

Signature _____ Date Signed 8/2/07

Telephone number 540 722 3579

Upon request of the department, you must submit any other information necessary to assess sewage sludge use or disposal practices at your facility or identify appropriate permitting requirements.

DEQ-VALLEY
AUG 13 2007
TO: _____
FILE: _____

FACILITY NAME: Parkins N[illegible] STP VP[illegible] PERMIT NUMBER: VA 0078191

SECTION B. GENERATION OF SEWAGE SLUDGE OR PREPARATION OF A MATERIAL DERIVED FROM SEWAGE SLUDGE

Complete this section if your facility generates sewage sludge or derives a material from sewage sludge

1. Amount Generated On Site.
   Total dry metric tons per 365-day period generated at your facility: 951 dry metric tons 2006

2. Amount Received from Off Site. If your facility receives sewage sludge from another facility for treatment, use or disposal, provide the following information for each facility from which sewage sludge is received. If you receive sewage sludge from more than one facility, attach additional pages as necessary.
   a. Facility name: _____
   b. Contact Person: N/A
      Title: _____
      Phone ( ) _____
   c. Mailing address:
      Street or P.O. Box: _____
      City or Town: _____ State: _____ Zip: _____
   d. Facility Address: _____
      (not P.O. Box) _____
   e. Total dry metric tons per 365-day period received from this facility: _____ dry metric tons
   f. Describe, on this form or on another sheet of paper, any treatment processes known to occur at the off-site facility, including blending activities and treatment to reduce pathogens or vector attraction characteristics:
      _____
      _____

3. Treatment Provided at Your Facility.
   a. Which class of pathogen reduction is achieved for the sewage sludge at your facility?
      __Class A X Class B __Neither or unknown
   b. Describe, on this form or another sheet of paper, any treatment processes used at your facility to reduce pathogens in sewage sludge: aerobic digestion
   c. Which vector attraction reduction option is met for the sewage sludge at your facility?
      __ Option 1 (Minimum 38 percent reduction in volatile solids)
      __ Option 2 (Anaerobic process, with bench-scale demonstration)
      __ Option 3 (Aerobic process, with bench-scale demonstration)
      __ Option 4 (Specific oxygen uptake rate for aerobically digested sludge)
      __ Option 5 (Aerobic processes plus raised temperature)
      __ Option 6 (Raise pH to 12 and retain at 11.5)
      __ Option 7 (75 percent solids with no unstabilized solids)
      __ Option 8 (90 percent solids with unstabilized solids)
      X None or unknown goes to landfill
   d. Describe, on this form or another sheet of paper, any treatment processes used at your facility to reduce vector attraction properties of sewage sludge: _____
   e. Describe, on this form or another sheet of paper, any other sewage sludge treatment activities, including blending, not identified in a - d above: _____

4. Preparation of Sewage Sludge Meeting Ceiling and Pollutant Concentrations, Class A Pathogen Requirements and One of Vector Attraction Reduction Options 1-8 (EQ Sludge).
   (If sewage sludge from your facility does not meet all of these criteria, skip Question 4.)
   a. Total dry metric tons per 365-day period of sewage sludge subject to this section that is applied to the land: _____ dry metric tons
   b. Is sewage sludge subject to this section placed in bags or other containers for sale or give-away?
      __Yes __No

FACILITY NAME: Perkins 1 STP VPDES PERMIT NUMBER: VA 0076191

5. Sale or Give-Away in a Bag or Other Container for Application to the Land.

(Complete this question if you place sewage sludge in a bag or other container for sale or give-away prior to land application. Skip this question if sewage sludge is covered in Question 4.)

a. Total dry metric tons per 365-day period of sewage sludge placed in a bag or other container at your facility for sale or give-away for application to the land:_____ dry metric tons

b. Attach, with this application, a copy of all labels or notices that accompany the sewage sludge being sold or given away in a bag or other container for application to the land.

6. Shipment Off Site for Treatment or Blending.

(Complete this question if sewage sludge from your facility is sent to another facility that provides treatment or blending. This question does not apply to sewage sludge sent directly to a land application or surface disposal site. Skip this question if the sewage sludge is covered in Questions 4 or 5. If you send sewage sludge to more than one facility, attach additional sheets as necessary.)

a. Receiving facility name:_____

b. Facility contact: _____

Title: _____

Phone: ( )_____

c. Mailing address:

Street or P.O. Box:_____

City or Town:_____ State:_____ Zip:_____

d. Total dry metric tons per 365-day period of sewage sludge provided to receiving facility: _____ dry metric tons

e. List, on this form or an attachment, the receiving facility's VPDES permit number as well as the numbers of all other federal, state or local permits that regulate the receiving facility's sewage sludge use or disposal practices:

Permit Number:	Type of Permit:
_____	_____
_____	_____

f. Does the receiving facility provide additional treatment to reduce pathogens in sewage sludge from your facility? __Yes __No

Which class of pathogen reduction is achieved for the sewage sludge at the receiving facility?

__Class A __Class B __Neither or unknown

Describe, on this form or another sheet of paper, any treatment processes used at the receiving facility to reduce pathogens in sewage sludge:_____

g. Does the receiving facility provide additional treatment to reduce vector attraction characteristics of the sewage sludge? __Yes __No

Which vector attraction reduction option is met for the sewage sludge at the receiving facility?

__ Option 1 (Minimum 38 percent reduction in volatile solids)
__ Option 2 (Anaerobic process, with bench-scale demonstration)
__ Option 3 (Aerobic process, with bench-scale demonstration)
__ Option 4 (Specific oxygen uptake rate for aerobically digested sludge)
__ Option 5 (Aerobic processes plus raised temperature)
__ Option 6 (Raise pH to 12 and retain at 11.5)
__ Option 7 (75 percent solids with no unstabilized solids)
__ Option 8 (90 percent solids with unstabilized solids)
__ None unknown

Describe, on this form or another sheet of paper, any treatment processes used at the receiving facility to reduce vector attraction properties of sewage sludge:_____

h. Does the receiving facility provide any additional treatment or blending not identified in f or g above? __Yes __No

If yes, describe, on this form or another sheet of paper, the treatment processes not identified in f or g above:

_____

i. If you answered yes to f., g or h above, attach a copy of any information you provide to the receiving facility to comply with the "notice and necessary information" requirement of 9 VAC 25-31-530.G.

j Does the receiving facility place sewage sludge from your facility in a bag or other container for sale or give-away for application to the land? __Yes __No
If yes, provide a copy of all labels or notices that accompany the product being sold or given away.

k. Will the sewage sludge be transported to the receiving facility in a truck-mounted watertight tank normally used for such purposes? ___ Yes ___ No. If no, provide description and specification on the vehicle used to transport the sewage sludge to the receiving facility.
Show the haul route(s) on a location map or briefly describe the haul route below and indicate the days of the week and the times of the day sewage sludge will be transported. _____

7. Land Application of Bulk Sewage Sludge.
(Complete Question 7.a if sewage sludge from your facility is applied to the land, unless the sewage sludge is covered in Questions 4, 5 or 6; complete Question 7.b, c & d only if you are responsible for land application of sewage sludge.)

a. Total dry metric tons per 365-day period of sewage sludge applied to all land application sites:_____dry metric tons

b. Do you identify all land application sites in Section C of this application? __Yes __No
If no, submit a copy of the Land Application Plan (LAP) with this application (LAP should be prepared in accordance with the instructions).

c. Are any land application sites located in States other than Virginia? __Yes __No
If yes, describe, on this form or on another sheet of paper, how you notify the permitting authority for the States where the land application sites are located. Provide a copy of the notification.

d. Attach a copy of any information you provide to the owner or lease holder of the land application sites to comply with the "notice and necessary" information requirement of 9 VAC 25-31-530 F and/or H (Examples may be obtained in Appendix IV).

8. Surface Disposal.
(Complete Question 8 if sewage sludge from your facility is placed on a surface disposal site.)

a. Total dry metric tons per 365-day period of sewage sludge from your facility placed on all surface disposal sites: _____ dry metric tons

b. Do you own or operate all surface disposal sites to which you send sewage sludge for disposal?
__Yes __No
If no, answer questions c - g for each surface disposal site that you do not own or operate. If you send sewage sludge to more than one surface disposal site, attach additional pages as necessary.

c. Site name or number: _____

d. Contact person: _____
Title: _____
Phone: ( ) _____
Contact is: __Site Owner __Site operator

e. Mailing address.
Street or P.O. Box:_____
City or Town:_____ State:_____ Zip:_____

f. Total dry metric tons per 365-day period of sewage sludge from your facility placed on this surface disposal site: _____ dry metric tons

g. List, on this form or an attachment, the surface disposal site VPDES permit number as well as the numbers of all other federal, state or local permits that regulate the sewage sludge use or disposal practices at the surface disposal site:

Permit Number:	Type of Permit:
_____	_____
_____	_____

9. Incineration.
(Complete Question 9 if sewage sludge from your facility is fired in a sewage sludge incinerator.)

a. Total dry metric tons per 365-day period of sewage sludge from your facility fired in a sewage sludge incinerator: _____ dry metric tons

FACILITY NAME: Perkins Mills STP **VPDES PERMIT NUMBER:** VA 0075191

b. Do you own or operate all sewage sludge incinerators in which sewage sludge from your facility is fired?
___Yes ___No
If no, answer questions c - g for each sewage sludge incinerator that you do not own or operate. If you send sewage sludge to more than one sewage sludge incinerator, attach additional pages as necessary.

c. Incinerator name or number: _____

d. Contact person: _____
Title: _____
Phone: ( ) _____
Contact is: ___Incinerator Owner ___Incinerator Operator

e. Mailing address.
Street or P.O. Box: _____
City or Town: _____ State: _____ Zip: _____

f. Total dry metric tons per 365-day period of sewage sludge from your facility fired in this sewage sludge incinerator: _____ dry metric tons

g. List on this form or an attachment the numbers of all other federal, state or local permits that regulate the firing of sewage sludge at this incinerator:

Permit Number:	Type of Permit:

10. Disposal in a Municipal Solid Waste Landfill.

(Complete Question 10 if sewage sludge from your facility is placed on a municipal solid waste landfill. Provide the following information for each municipal solid waste landfill on which sewage sludge from your facility is placed. If sewage sludge is placed on more than one municipal solid waste landfill, attach additional pages as necessary.)

a. Landfill name: Frederick County Regional Landfill

b. Contact person: Ron Kimble
Title: Environmental Manager
Phone: (540) 665 5658
Contact is: ___Landfill Owner X Landfill Operator

c. Mailing address.
Street or P.O. Box: 107 North Kent St.
City or Town: Winchester State: VA Zip: 22601

d. Landfill location.
Street or Route #: 280 Landfill Rd.
County: Frederick
City or Town: Winchester State: VA Zip: 22602

e. Total dry metric tons per 365-day period of sewage sludge placed in this municipal solid waste landfill:
251 year 2006 dry metric tons

f. List, on this form or an attachment, the numbers of all federal, state or local permits that regulate the operation of this municipal solid waste landfill:

Permit Number:	Type of Permit:
529	VA DEQ Solid Waste
8132	DEQ Title V

g. Does sewage sludge meet applicable requirements in the Virginia Solid Waste Management Regulation, 9 VAC 20-80-10 et seq., concerning the quality of materials disposed in a municipal solid waste landfill?
X Yes ___No

h. Does the municipal solid waste landfill comply with all applicable criteria set forth in the Virginia Solid Waste Management Regulation, 9 VAC 20-80-10 et seq.? X Yes ___No

i. Will the vehicle bed or other container used to transport sewage sludge to the municipal solid waste landfill be watertight and covered? X Yes ___ No
Show the haul route(s) on a location map or briefly describe the route below and indicate the days of the week and time of the day sewage sludge will be transported. Mon. - Fri. 7:30 AM - 2:00 PM
Saturday 7:00 AM - 11:00 AM

FACILITY NAME:_____ VPI PERMIT NUMBER:_____

SECTION C. LAND APPLICATION OF BULK SEWAGE SLUDGE

Complete this section for sewage sludge that is land applied unless any of the following conditions apply:

The sewage sludge meets the Table 1 ceiling concentrations, the Table 3 pollutant concentrations, Class A pathogen requirements and one of the vector attraction reduction options 1-8 (fill out B.4 instead) (EQ Sludge); or

The sewage sludge is sold or given away in a bag or other container for application to the land (fill out B.5 instead); or

You provide the sewage sludge to another facility for treatment or blending (fill out B.6 instead).

Complete Section C for every site on which the sewage sludge that you reported in B.7 is land applied.

1. Identification of Land Application Site.
   a. Site name or number: _____
   b. Site location (Complete i and ii)
      i. Street or Route#: _____
         County: _____
         City or Town: _____ State: _____ Zip: _____
      ii. Latitude:_____ Longitude:_____
         Method of latitude/longitude determination
         _____ USGS map _____ Filed survey _____ Other
   c. Topographic map. Provide a topographic map (or other appropriate map if a topographic map is unavailable) that shows the site location.

2. Owner Information.
   a. Are you the owner of this land application site? __Yes __No
   b. If no, provide the following information about the owner:
      Name: _____
      Street or P.O. Box:_____
      City or Town: _____ State:_____ Zip:_____
      Phone: ( )_____

3. Applier Information:
   a. Are you the person who applies, or who is responsible for application of, sewage sludge to this land application site? __Yes __No
   b. If no, provide the following information for the person who applies the sewage sludge:
      Name: _____
      Street or P.O. Box:_____
      City or Town:_____ State:_____ Zip:_____
      Phone: ( )_____
   c. List, on this form or an attachment, the numbers of all federal, state or local permits that regulate the person who applies sewage sludge to this land application site:

Permit Number:	Type of Permit:
_____	_____
_____	_____

4. Site Type. Identify the type of land application site from among the following:
   __Agricultural land __Reclamation site __Forest
   __Public contact site __Other. Describe _____

5. Vector Attraction Reduction.
   Are any vector attraction reduction requirements met when sewage sludge is applied to the land application site?
   ___Yes ___No If yes, answer a and b.
   a. Indicate which vector attraction reduction option is met:
      __ Option 9 (Injection below land surface)
      __ Option 10 (Incorporation into soil within 6 hours)
   b. Describe, on this form or on another sheet of paper, any treatment processes used at the land application site to reduce the vector attraction properties of sewage sludge:
      _____
      _____

6. Cumulative Loadings and Remaining Allotments.

(Complete Question 6 only if the sewage sludge applied to this site since July 20, 1993 is subject to the cumulative pollutant loading rates (CPLRs) - see instructions.)

a. Have you contacted DEQ or the permitting authority in the state where the sewage sludge subject to the CPLRs will be applied to ascertain whether bulk sewage sludge subject to the CPLRs has been applied to this site since July 20, 1993? __Yes __No

If no, sewage sludge subject to the CPLRs may not be applied to this site.

If yes, provide the following information:

Permitting authority: _____

Contact person:_____

Phone:( )_____

b. Based upon this inquiry, has bulk sewage sludge subject to the CPLRs been applied to this site since July 20, 1993? __Yes __No If no, skip the rest of Question 6. If yes, answer questions c - e.

c. Site size, in hectares: _____ (one hectare = 2.471 acres)

d. Provide the following information for every facility other than yours that is sending or has sent sewage sludge subject to the CPLRs to this site since July 20, 1993. If more than one such facility sends sewage sludge to this site, attach additional pages as necessary.

Facility name:_____

Facility contact: _____

Title: _____

Phone: ( )_____

Mailing address.

Street or P.O. Box:_____

City or Town:_____ State:_____ Zip:_____

e. Provide the total loading and allotment remaining, in kg/hectare, for each of the following pollutants:

	Cumulative loading	Allotment remaining
Arsenic	_____	_____
Cadmium	_____	_____
Copper	_____	_____
Lead	_____	_____
Mercury	_____	_____
Nickel	_____	_____
Selenium	_____	_____
Zinc	_____	_____

Complete Questions 7-12 below only if you apply sewage sludge, or you are responsible for land application of sewage sludge. Information required by these questions may be prepared as attachments to this form. Skip the following questions if you contract land application to someone else (as indicated under Section A.7) who is responsible for the operation.

7. Sludge Characterization. Use the table below or a separate attachment, provide at least one analysis for each parameter.

PCBs (mg/kg)	____
pH (S. U.)	____
Percent Solids (%)	____
Ammonium Nitrogen (mg/kg)	____
Nitrate Nitrogen (mg/kg)	____
Total Kjeldahl Nitrogen (mg/kg)	____
Total Phosphorus (mg/kg)	____
Total Potassium (mg/kg)	____
Alkalinity as $CaCO_3$* (mg/kg)	____

* Lime treated sludge (10% or more lime by dry weight) should be analyzed for percent $CaCO_3$.

8. Storage Requirements.

Existing and proposed sludge storage facilities must provide an estimated annual sludge balance on a monthly basis incorporating such factors as storage capacity, sludge production and land application schedule. Include pertinent calculations justifying storage requirements.

Proposed sludge storage facilities must also provide the following information:

a. A sludge storage site layout on a 7.5 minute topographic quadrangle or other appropriate scaled map to show the following topographic features of the surrounding landscape to a distance of 0.25 mile. Clearly mark the property line.
   1) Water wells, abandoned or operating
   2) Surface waters
   3) Springs
   4) Public water supply(s)
   5) Sinkholes
   6) Underground and/or surface mines
   7) Mine pool (or other) surface water discharge points
   8) Mining spoil piles and mine dumps
   9) Quarry(s)
   10) Sand and gravel pits
   11) Gas and oil wells
   12) Diversion ditch(s)
   13) Agricultural drainage ditch(s)
   14) Occupied dwellings, including industrial and commercial establishments
   15) Landfills or dumps
   16) Other unlined impoundments
   17) Septic tanks and drainfields
   18) Injection wells
   19) Rock outcrops

b. A topographic map of sufficient detail to clearly show the following information:
   1) Maximum and minimum percent slopes
   2) Depressions on the site that may collect water
   3) Drainageways that may attribute to rainfall run-on to or runoff from this site
   4) Portions of the site (if any) which are located with the 100-year floodplain and how the storage facility will be protected from flooding

c. Data and specifications for the storage facility lining material.

d. Plan and cross-sectional views of the storage facility.

e. Depth from the bottom of the storage facility to the seasonal high water table and separation distance to the permanent water table.

9. Land Area Requirements. Provide calculations justifying the land area requirements for land application of sewage sludge taking into consideration average soil productivity group, crop(s) to be grown and most limiting factor(s) of the sewage sludge, specifically Plant Available Nitrogen (PAN), Calcium Carbonate Equivalence (CCE), and metal loadings (CPLR sewage sludge only), where applicable. Relate PAN, CCE, and metal loadings to demonstrate the most limiting factor for land application.

10. Landowner Agreement Forms. Provide a properly completed Sewage Sludge Application Agreement Form (attached) for each landowner if sewage sludge is to be applied onto land not owned by the applicant.

11. Ground Water Monitoring.

Are any ground water monitoring data available for this land application site? ___Yes ___No

If yes, submit the ground water monitoring data with this permit application. Also submit a written description of the well locations, approximate depth to ground water, and the ground water monitoring procedures used to obtain these data.

12. Land Application Site Information.

(Complete Items a-d for sites receiving infrequent application - land application of sewage sludge up to the agronomic rate at a frequency of once in a 3 year period; complete Items a-h for sites receiving frequent application - land application of sewage sludge in excess of 70% the agronomic rate at a frequency greater than once in a 3 year period)

a. Provide a general location map for each county which clearly indicates the location of all the land application sites.

b. For each land application site provide a site plan of sufficient detail to clearly show the concerned landscape features and associated buffer zones (See instructions). Provide a legend for each landscape feature and the net acreage for each field taking into account the proposed buffer zones.

c. In order to ensure that land application of bulk sewage sludge will not impact federally listed threatened or endangered species or federally designated critical habitat, the applicant must notify the field office of the U. S. Department of the Interior, Fish and Wildlife Service (FWS), by a letter, the proposed land application activities with the identification of the land application sites. The address and phone number of FWS are provided below.

U. S. Fish and Wildlife Service
Virginia Field Office
6669 Short Lane
Gloucester, VA 23061
TEL: (804)693-6694

Provide a copy of the notification letter with this application form.

d. Provide a soil survey map, preferably photographically based, with the field boundaries clearly marked. (A USDA-SCS soil survey map should be provided, if available.)
Provide a detailed legend for each soil survey map which uses accepted USDA-SCS descriptions of the typifying pedon for each soil series (soil type). Complex associations may be described as a range of characteristics. Soil descriptions shall include as a minimum the following information.

1) Soil symbol
2) Soil series, textural phase and slope range
3) Depth to seasonal high water table
4) Depth to bedrock
5) Estimated soil productivity group (for the proposed crop rotation)

Item e - h are required for sites receiving frequent application of sewage sludge

e. In order to verify the information provided in item d, characterize the soil at each land application site. Representative soil borings or test pits to a depth of five feet or to bedrock if shallower, are to be coordinated for the typifying pedon of each soil series (soil type). Soil descriptions shall include as a minimum the following information:

1). Soil symbol
2). Soil series, textural phase and slope range
3). Depth to seasonal high water table
4). Depth to bedrock
5). Estimated soil productivity group (for the proposed crop rotation)

f. Collect and analyze soil samples from each field, weighted to best represent each of the soil borings performed for Item e. Using the table below or a separate attachment, provide at least one analysis per sample for each of the following parameters.

Soil Organic Matter (%)	_____
Soil pH (std. units)	_____
Cation Exchange Capacity (meq/100g)	_____
Total Nitrogen (ppm)	_____
Organic Nitrogen (ppm)	_____
Ammonia Nitrogen (ppm)	_____
Nitrate Nitrogen (ppm)	_____
Available Phosphorus (ppm)	_____
Exchangeable Potassium (mg/100g)	_____
Exchangeable Sodium (mg/100g)	_____
Exchangeable Calcium (mg/100g)	_____
Exchangeable Magnesium (mg/100g)	_____
Arsenic (ppm)	_____
Cadmium (ppm)	_____
Copper (ppm)	_____
Lead (ppm)	_____
Mercury (ppm)	_____
Molybdenum (ppm)	_____
Nickel (ppm)	_____
Selenium (ppm)	_____
Zinc (ppm)	_____
Manganese (ppm)	_____
Particle Size Analysis or USDA Textural Estimate (%)	_____

g. Relate the crop nutrient needs to anticipated yields, soil productivity rating and the various fertilizer or nutrient sources from sludge and chemical fertilizers. Describe any specialized agronomic management practices which may be required as a result of high soil pH. If the sludge is expected to possess an unusually high CCE or other unusual properties, provide a description of any plant tissue testing, supplemental fertilization or intensive agronomic management practices which may be necessary.

h. Using a narrative format and referencing any related charts, describe the proposed cropping system. Show how the crop rotation and management will be coordinated with the design of the land application system. Include any supplemental fertilization program, soil testing and the coordination of tillage practices, planting and harvesting schedules and timing of land application.

FACILITY NAME: _____ **VPDES PERMIT NUMBER:** _____

SEWAGE SLUDGE APPLICATION AGREEMENT

This sewage sludge application agreement is made on this date _____ between _____, referred to here as "landowner", and _____, referred to here as the "Permittee".

Landowner is the owner of agricultural land shown on the map attached as Exhibit A and designated there as _____ ("landowner's land"). Permittee agrees to apply and landowner agrees to comply with certain permit requirements following application of sewage sludge on landowner's land in amounts and in a manner authorized by VPDES permit number _____ which is held by the Permittee.

Landowner acknowledges that the appropriate application of sewage sludge will be beneficial in providing fertilizer and soil conditioning to the property. Moreover, landowner acknowledges having been expressly advised that, in order to protect public health, the following site restrictions must be adhered to when sewage sludge receives Class B treatment for pathogen reduction:

1. Food crops with harvested parts that touch the sewage sludge/soil mixture and are totally above the land surface shall not be harvested for 14 months after application of sewage sludge;

2. Food crops with harvested parts below the surface of the land shall not be harvested for 20 months after application of sewage sludge when the sewage sludge remains on the land surface for four months or longer prior to incorporation into the soil;

3. Food crops with harvested parts below the surface of the land shall not be harvested for 38 months after application of sewage sludge when the sewage sludge remains on the land surface for less than four months prior to incorporation into the soil;

4. Food crops, feed crops, and fiber crops shall not be harvested for 30 days after application of sewage sludge;

5. Animals shall not be grazed on the land for 30 days after application of sewage sludge;

6. Turf grown on land where sewage sludge is applied shall not be harvested for one year after application of the sewage sludge when the harvested turf is placed on either land with a high potential for public exposure or a lawn, unless otherwise specified by the State Water Control Board;

7. Public access to land with a high potential for public exposure shall be restricted for one year after application of sewage sludge;

8. Public access to land with a low potential for public exposure shall be restricted for 30 days after application of sewage sludge.

9. Tobacco, because it has been shown to accumulate cadmium, should not be grown on landowner's land for three years following the application of sewage sludge borne cadmium equal to or exceeding 0.5 kilograms/hectare (0.45 pounds/acre).

Permittee agrees to notify landowner or landowner's designee of the proposed schedule for sewage sludge application and specifically prior to any particular application to landowner's land. This agreement may be terminated by either party upon written notice to the address specified below.

Landowner:	Permittee:
_____	_____
Signature	Signature
_____	_____
Mailing Address	Mailing Address

FACILITY NAME: _____ VPDES PERMIT NUMBER: _____

SECTION D. SURFACE DISPOSAL

Complete this section only if you own or operate a surface disposal site. Provide the information for each active sewage sludge unit.

1. Information on Active Sewage Sludge Units.
   a. Unit name or number: _____
   b. Unit location
      i. Street or Route#: _____
         County: _____
         City or Town: _____ State: _____ Zip: _____
      ii. Latitude: _____ Longitude: _____
         Method of latitude/longitude determination
         _____ USGS map _____ Filed survey _____ Other
   c. Topographic map. Provide a topographic map (or other appropriate map if a topographic map is unavailable) that shows the site location.
   d. Total dry metric tons of sewage sludge placed on the active sewage sludge unit per 365-day period: _____ dry metric tons.
   e. Total dry metric tons of sewage sludge placed on the active sewage sludge unit over the life of the unit: _____ dry metric tons.
   f. Does the active sewage sludge unit have a liner with a minimum hydraulic conductivity of 1×10^{-7} cm/sec? __Yes __No If yes, describe the liner or attach a description.
      _____
      _____
   g. Does the active sewage sludge unit have a leachate collection system? __Yes __No
      If yes, describe the leachate collection system or attach a description. Also, describe the method used for leachate disposal and provide the numbers of any federal, state or local permits for leachate disposal:
      _____
      _____
      _____
   h. If you answered no to either f or g, answer the following:
      Is the boundary of the active sewage sludge unit less than 150 meters from the property line of the surface disposal site? __Yes __No If yes, provide the actual distance in meters: _____
   i. Remaining capacity of active sewage sludge unit, in dry metric tons: _____ dry metric tons
      Anticipated closure date for active sewage sludge unit, if known: _____ (MM/DD/YYYY)
      Provide with this application a copy of any closure plan developed for this active sewage sludge unit.

2. Sewage Sludge from Other Facilities.
   Is sewage sludge sent to this active sewage sludge unit from any facilities other than yours? __Yes __No
   If yes, provide the following information for each such facility, attach additional sheets as necessary.
   a. Facility name: _____
   b. Facility contact: _____
      Title: _____
      Phone: ( ) _____
   c. Mailing address.
      Street or P.O. Box: _____
      City or Town: _____ State: _____ Zip: _____
   d. List, on this form or an attachment, the facility's VPDES permit number as well as the numbers of all other federal, state or local permits that regulate the facility's sewage sludge management practices:

Permit Number:	Type of Permit:
_____	_____
_____	_____

   e. Which class of pathogen reduction is achieved before sewage sludge leaves the other facility?
      __Class A __Class B __Neither or unknown
   f. Describe, on this form or on another sheet of paper, any treatment processes used at the other facility to reduce pathogens in sewage sludge: _____
      _____
      _____

g. Which vector attraction reduction option is achieved before sewage sludge leaves the other facility?
___ Option 1 (Minimum 38 percent reduction in volatile solids)
___ Option 2 (Anaerobic process, with bench-scale demonstration)
___ Option 3 (Aerobic process, with bench-scale demonstration)
___ Option 4 (Specific oxygen uptake rate for aerobically digested sludge)
___ Option 5 (Aerobic processes plus raised temperature)
___ Option 6 (Raise pH to 12 and retain at 11.5)
___ Option 7 (75 percent solids with no unstabilized solids)
___ Option 8 (90 percent solids with unstabilized solids)
___ None or unknown

h. Describe, on this form or another sheet of paper, any treatment processes used at the other facility to reduce vector attraction properties of sewage sludge: _____

i. Describe, on this form or another sheet of paper, any other sewage sludge treatment activities performed by the other facility that are not identified in e - h above: _____

3. Vector Attraction Reduction.

a. Which vector attraction reduction option, if any, is met when sewage sludge is placed on this active sewage sludge unit?
___ Option 9 (Injection below land surface)
___ Option 10 (Incorporation into soil within 6 hours)
___ Option 11 (Covering active sewage sludge unit daily)

b. Describe, on this form or another sheet of paper, any treatment processes used at the active sewage sludge unit to reduce vector attraction properties of sewage sludge: _____

4. Ground Water Monitoring.

a. Is ground water monitoring currently conducted at this active sewage sludge unit or are ground water monitoring data otherwise available for this active sewage sludge unit? ___Yes ___No
If yes, provide a copy of available ground water monitoring data. Also provide a written description of the well locations, the approximate depth to ground water, and the ground water monitoring procedures used to obtain these data.

b. Has a ground water monitoring program been prepared for this active sewage sludge unit?
___Yes ___No If yes, submit a copy of the ground water monitoring program with this application.

c. Have you obtained a certification from a qualified ground water scientist that the aquifer below the active sewage sludge unit has not been contaminated? ___Yes ___No
If yes, submit a copy of the certification with this application.

5. Site-Specific Limits.
Are you seeking site-specific pollutant limits for the sewage sludge placed on the active sewage sludge unit?
___Yes ___No If yes, submit information to support the request for site-specific pollutant limits with this application.

COUNTY of FREDERICK

Department of Public Works
540/665-5643
FAX: 540/678-0682

August 9, 2007

Mr. Hank Sliwinski
Frederick County Sanitation Authority
P.O. Box 1877
Winchester, VA 22604

RE: Disposal of Sewage Sludge

Dear Mr. Sliwinski:

The Frederick County Landfill is allowed to accept stabilized, dewatered sewage sludge, such as is generated at the Parkins Mill Treatment Plant. According to information that you provided, an estimated 275 metric tons (dry weight) of stabilized biosolids are generated per year. I have also reviewed the TCLP testing that you recently provided and find the sludge to be classified as a solid waste. The Frederick County Landfill will be able to continue disposal of this waste at the prevailing rate for sludge.

We look forward to being able to assist you with the disposal of this waste. If you need any additional information regarding our facility or acceptance of materials, please feel free to contact me at 540/665/6558.

Sincerely,

Ronnel V. Kimble, Jr.
Environmental Manager
Frederick County Landfill

RECEIVED
AUG 10 2007
FCSA

DEQ-VALLEY
AUG 13 2007
TO: _____
FILE: _____

Parkins Mills STP VA 0075191
Permit Application

Sludge Permit Application
Section A. 8.

Truck haul map

Sludge analysis reports of sludge sampled on:
12/11/06
09/07/05
08/28/04
10/13/03

PARKINS MILLS STP
SLUDGE PERMIT APPLICA ON

VA0075191

SLUDGE TRUCK ROUTE _____

ALTERNATE ROUTE _ _ _ _ _ _ _ _ _ _ _ _ _ _

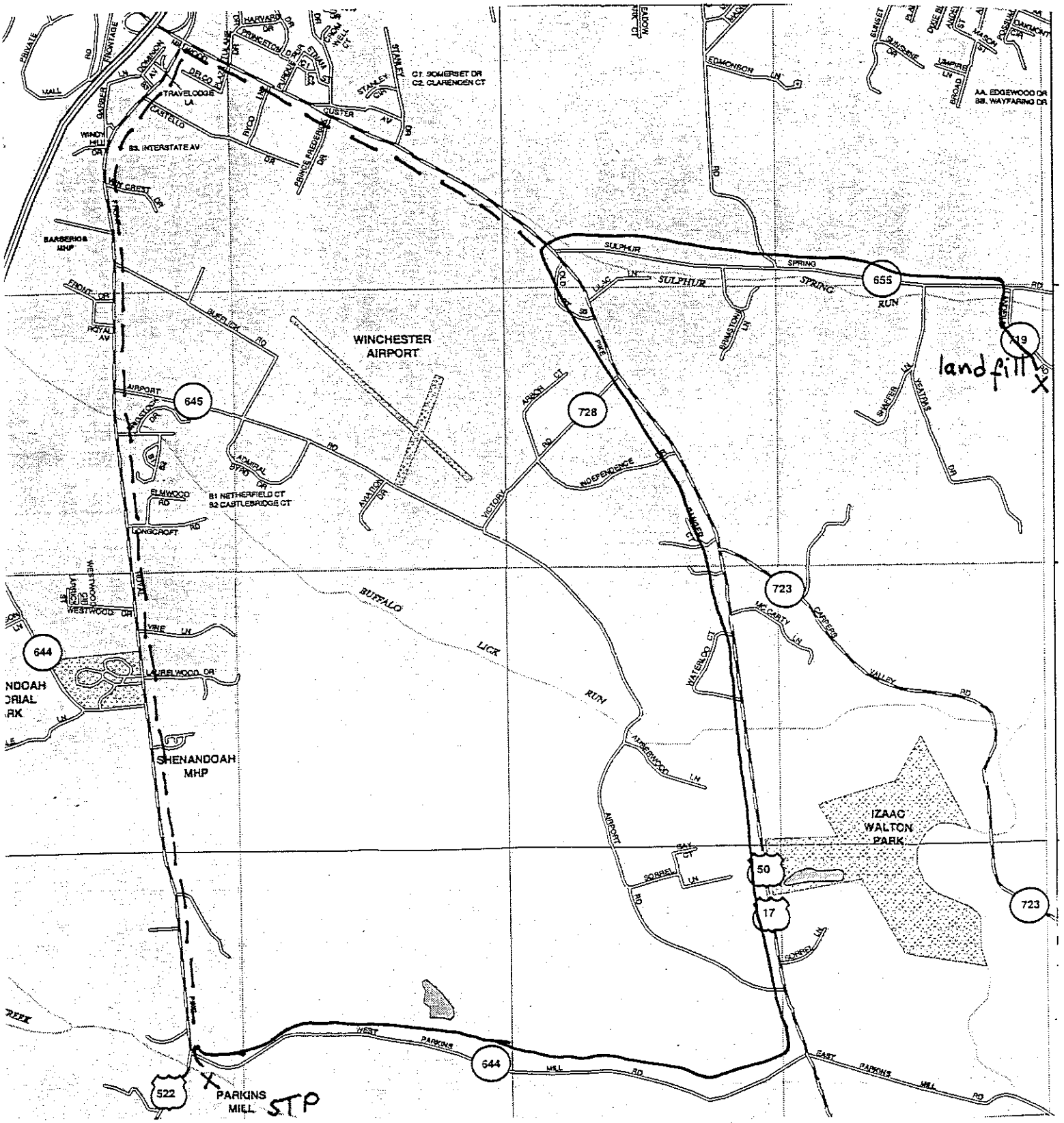

Inboden Environmental Services, Inc.
5790 Main Street
Mt. Jackson, VA 22842

Phone: (540) 477-3300
Fax: (540) 477-3360

Analytical Report Form

To: Frederick County Sanitation Authority
P.O. Box 1877
Winchester, VA 22604

Date: 1/23/2007
Project: Sludge Analysis
Project # 700196
Customer # 1063

Attn: Mr. Steve Nicholson

Sample Identification

Samp. No.	Sample Location	Date Sampled	Time Sampled	Sample Type	Sampler Initials	Date Received
01	Sludge	12/11/2006	10:00 AM	Grab	BA	12/13/2006

Sample Results

Samp. No.	Analysis Requested	Results	Units	Detection Limit	Analyst	Test Date	Test Time
01	*Solids, Percent	14.4	%	0.001	DLL	12/20/2006	1:20 PM
01	*Nitrogen, Total	60624(6.06%)	mg/kg	164	TLG	1/11/2007	10:30 AM
01	*Nitrogen, Organic	55400(5.54%)	mg/kg	31	TLG	1/11/2007	10:30 AM
01	*pH (std. units, as is)	8.20@21°C	Std. Units		EAC	12/19/2006	2:30 PM
01	*Nitrogen, Total Kjeldahl	60600(6.06%)	mg/kg	161	DMS	1/5/2007	10:59 AM
01	*Nitrogen, Ammonia	5180	mg/kg	130	EAC	12/20/2006	11:45 AM
01	*Nitrogen, Nitrate/Nitrite	24	mg/kg	3.45	DMS	1/9/2007	12:21 PM
01	*Alkalinity (as CaCO3)	20200(2.02%)	mg/kg	69.31	DMS	12/29/2006	10:00 AM
01	Volatile Solids, Percent	11.54	%	0.001	TLG	1/11/2007	11:00 AM

Methods

Solids, Percent - SM 2540 G
Solids, Volatile - SM 2540 G
pH- 9045C
Alkalinity - 2320B
Standard Methods for the Examination of Water and Wastewater, 18th Edition.

Nitrogen, Nitrate/Nitrite -EPA 353.2
Nitrogen, Total Kjeldahl - EPA 351.2
Nitrogen, Ammonia - EPA 350.3
Nitrogen, Total - 351.2/353.2
Nitrogen, Organic -351.2/350.3
'Methods for Chemical Analysis of Water & Wastes', U.S. Environmental Protection Agency.

James R. Reed- Sample #06-25227

Inboden Environmental Services, Inc.
5790 Main Street
Mt. Jackson, VA 22842

Phone: (540) 477-3300
Fax: (540) 477-3360

Analytical Report Form

To: Frederick County Sanitation Authority
P.O. Box 1877
Winchester, VA 22604

Date: 1/23/2007
Project: Sludge Analysis
Project # 700196
Customer # 1063

Attn: Mr. Steve Nicholson

Sample Identification

Samp. No.	Sample Location	Date Sampled	Time Sampled	Sample Type	Sampler Initials	Date Received
01	Sludge	12/11/2006	10:00 AM	Grab	BA	12/13/2006

Sample Results

Samp. No.	Analysis Requested	Results	Units	Detection Limit	Analyst	Test Date	Test Time
01	*Arsenic	<3.46	mg/Kg	3.45	TLG	1/2/2007	3:56 PM
01	*Boron	87.9	mg/Kg	3.45	TLG	1/2/2007	3:56 PM
01	*Cadmium	0.877	mg/Kg	0.345	TLG	1/2/2007	3:56 PM
01	*Chromium	15.2	mg/Kg	0.690	TLG	1/2/2007	3:56 PM
01	*Copper	210	mg/Kg	3.45	TLG	1/2/2007	3:56 PM
01	*Lead	9.38	mg/Kg	3.45	TLG	1/2/2007	3:56 PM
01	*Mercury	9.32	mg/Kg	0.688	TLG	1/3/2007	1:52 PM
01	*Molybdenum	7.08	mg/Kg	3.45	TLG	1/2/2007	3:56 PM
01	*Nickel	17.0	mg/Kg	3.45	TLG	1/2/2007	3:56 PM
01	*Phosphorus	14800(1.48%)	mg/Kg	3.22	LEF	12/29/2006	9:32 AM
01	*Potassium	3310	mg/Kg	17.2	TLG	1/2/2007	3:56 PM
01	*Selenium	4.34	mg/Kg	3.45	TLG	1/2/2007	3:56 PM
01	*Zinc	547	mg/Kg	3.45	TLG	1/2/2007	3:56 PM

Methods

Arsenic - SW-846 6010B
Boron - SW-846 6010B
Cadmium - SW-846 6010B
Chromium - SW-846 6010B
Copper - SW-846 6010B
Lead - SW-846 6010B
Mercury - SW-846 7471A
Molybdenum - SW-846 6010B
Nickel - SW-846 6010B
Phosphorus - 365.4
Potassium - SW-846 6010B
Selenium - SW-846 6010B
Zinc - SW-846 6010B
"Test Methods for Evaluating Solid Waste: Physical/Chemical Methods", SW-846, Third Edition, U.S. Environmental Protection Agency. Update III, December, 1996.

James R. Reed-Sample #06-25227

Inboden Environmental Services, Inc.
5790 Main Street
Mt. Jackson, VA 22842

Phone: (540) 477-3300
Fax: (540) 477-3360

Analytical Report Form

To: Frederick County Sanitation Authority
P.O. Box 1877
Winchester, VA 22604

Date: 1/23/2007
Project: Sludge Analysis
Project # 700196
Customer # 1063

Attn: Mr. Steve Nicholson

Sample Identification

Samp. No.	Sample Location	Date Sampled	Time Sampled	Sample Type	Sampler Initials	Date Received
01	Sludge	12/11/2006	10:00 AM	Grab	BA	12/13/2006

Sample Results

Samp. No.	Analysis Requested	Results	Units	Detection Limit	Analyst	Test Date	Test Time
01	**PCBs						
	**Aroclor 1016	<10	mg/kg	10	DLL	12/29/2006	1:34 PM
	**Aroclor 1221	<10	mg/kg	10	DLL	12/29/2006	1:34 PM
	**Aroclor 1232	<10	mg/kg	10	DLL	12/29/2006	1:34 PM
	**Aroclor 1242	<10	mg/kg	10	DLL	12/29/2006	1:34 PM
	**Aroclor 1248	<10	mg/kg	10	DLL	12/29/2006	1:34 PM
	**Aroclor 1254	<4	mg/kg	4	DLL	12/29/2006	1:34 PM
	**Aroclor 1260	<4	mg/kg	4	DLL	12/29/2006	1:34 PM

Methods

Aroclor 1016 - SW-846 8082
Aroclor 1221 - SW-846 8082
Aroclor 1232 - SW-846 8082
Aroclor 1242 - SW-846 8082
Aroclor 1248 - SW-846 8082
Aroclor 1254 - SW-846 8082
Aroclor 1260 - SW-846 8082
"Test Methods for Evaluating Solid Waste: Physical/Chemical Methods", SW-846, Third Edition, U.S. Environmental Protection Agency, Update III, December, 1996.

**James R Reed & Associates-Sample # 06-25227

I oden Environmental Serv s, Inc.
5790 Main Street
Mt. Jackson, VA 22842

Phone: (540) 477-3300
Fax: (540) 477-3360

Analytical Report Form

To: Frederick County Sanitation Authority
P.O. Box 1877
Winchester, VA 22604

Date: 10/21/2005
Project: Sludge Analysis
Project # 501203
Customer # 1063

Attn: Mr. Steve Nicholson

Sample Identification

Samp. No.	Sample Location	Date Sampled	Time Sampled	Sample Type	Sampler Initials	Date Received
1	Biosolid	9/7/2005	Not Given	Grab	SN	9/7/2005

Sample Results

Samp. No.	Analysis Requested	Results	Detection Limit	Units	Analyst	Test Date	Test Time
1	*Solids, Percent	16.51	0.01	%	JCM	9/12/2005	4:00 PM
1	*Solids, Volatile (dry)	73.89	0.01	%	KCS	9/13/2005	4:00 PM
1	*Nitrogen, Total	7.02	CALCULATION	%			
1	*Nitrogen, Organic	6.11	CALCULATION	%			
1	*pH (std. units, as is)	7.59		Std. Units	RD	9/13/2005	12:30 PM
1	*Nitrogen, Total Kjeldahl	70200	100	mg/kg	KCS	9/13/2005	4:00 PM
1	*Nitrogen, Ammonia	9100	100	mg/kg	KCS	9/13/2005	2:00 PM
1	*Nitrogen, Nitrate/Nitrite	<10	10	mg/kg	KCS	9/13/2005	3:00 PM
1	*Alkalinity (as CaCO3)	100000	1	mg/kg	KCS	9/13/2005	11:00 AM

Note - Results expressed as mg/kg or % are calculated on a received weight basis.

Methods

Solids, Percent - SM 2540 G
Solids, Volatile - SM 2540 G
Nitrogen, Nitrate/Nitrite - SM 4500-NO3 F
"Standard Methods for the Examination of Water and Wastewater", 18th Edition.

Nitrogen, Total Kjeldahl - EPA 351.3
Nitrogen, Ammonia - EPA 350.2
pH (std. units, as is) - EPA 150.1
Alkalinity - EPA 310.1
Nitrogen, Total - Calculation
Nitrogen, Organic - Calculation
"Methods for Chemical Analysis of Water & Wastes", U.S. Environmental Protection Agency.

FCSA RECEIVED OCT 24 2005

*A&L Eastern Agricultural Laboratories, Inc. (Report #: R254-130)

Hooden Environmental Services, Inc.
5790 Main Street
Mt. Jackson, VA 22842
Phone: (540) 477-3300
Fax: (540) 477-3360

Analytical Report Form

To: Frederick County Sanitation Authority
P.O. Box 1877
Winchester, VA 22604

Date: 10/21/2005
Project: Sludge Analysis
Project # 501203
Customer # 1063

Attn: Mr. Steve Nicholson

Sample Identification

Samp. No.	Sample Location	Date Sampled	Time Sampled	Sample Type	Sampler Initials	Date Received
1	Biosolid	9/7/2005	Not Given	Grab	SN	9/7/2005

Sample Results

Samp. No.	Analysis Requested	Results	Detection Limit	Units	Analyst	Test Date	Test Time
1	*Arsenic	2.56	0.2	mg/kg	KMM	9/15/2005	3:00 PM
1	*Boron	71	1	mg/kg	JCM	9/13/2005	4:00 PM
1	*Cadmium	<1	1	mg/kg	JCM	9/13/2005	4:00 PM
1	*Chromium	25	5	mg/kg	JCM	9/13/2005	4:00 PM
1	*Copper	225	1	mg/kg	JCM	9/13/2005	4:00 PM
1	*Lead	17	5	mg/kg	JCM	9/13/2005	4:00 PM
1	*Mercury	1.11	0.2	mg/kg	KMM	9/15/2005	3:00 PM
1	*Molybdenum	8	5	mg/kg	JCM	9/13/2005	4:00 PM
1	*Nickel	13	5	mg/kg	JCM	9/13/2005	4:00 PM
1	*Phosphorus	18400	100	mg/kg	JCM	9/13/2005	4:00 PM
1	*Potassium	2700	100	mg/kg	JCM	9/13/2005	4:00 PM
1	*Selenium	7.26	0.1	mg/kg	KMM	9/15/2005	3:00 PM
1	*Zinc	845	1	mg/kg	JCM	9/13/2005	4:00 PM

Note - Results expressed as mg/kg or % are calculated on a received weight basis.

Methods

Arsenic - SW-846 7061A
Boron - SW-846 6010B
Cadmium - SW-846 6010B
Chromium - SW-846 6010B
Copper - SW-846 6010B
Lead - SW-846 6010B
Mercury - SW-846 7471A
Molybdenum - SW-846 6010B
Nickel - SW-846 6010B
Phosphorus - SW-846 6010B
Potassium - SW-846 6010B
Selenium - SW-846 7741A
Zinc - SW-846 6010B
"Test Methods for Evaluating Solid Waste: Physical/Chemical Methods", SW-846, Third Edition, U.S. Environmental Protection Agency. Update III, December, 1996.

*A&L Eastern Agricultural Laboratories, Inc. (Report #: R254-130)

I oden Environmental Serv s, Inc.
5790 Main Street
Mt. Jackson, VA 22842
Phone: (540) 477-3300
Fax: (540) 477-3360

Analytical Report Form

To: Frederick County Sanitation Authority
P.O. Box 1877
Winchester, VA 22604

Date: 10/21/2005
Project: Sludge Analysis
Project # 501203
Customer # 1063

Attn: Mr. Steve Nicholson

Sample Identification

Samp. No.	Sample Location	Date Sampled	Time Sampled	Sample Type	Sampler Initials	Date Received
1	Biosolid	9/7/2005	Not Given	Grab	SN	9/7/2005

Sample Results

Samp. No.	Analysis Requested	Results	Detection Limit	Units	Analyst	Test Date	Test Time
1	**PCBs						
	**Aroclor 1016	<0.3	0.3	mg/kg	BRD	9/22/2005	4:59 PM
	**Aroclor 1221	<0.3	0.3	mg/kg	BRD	9/22/2005	4:59 PM
	**Aroclor 1232	<0.3	0.3	mg/kg	BRD	9/22/2005	4:59 PM
	**Aroclor 1242	<0.3	0.3	mg/kg	BRD	9/22/2005	4:59 PM
	**Aroclor 1248	<0.3	0.3	mg/kg	BRD	9/22/2005	4:59 PM
	**Aroclor 1254	<0.1	0.1	mg/kg	BRD	9/22/2005	4:59 PM
	**Aroclor 1260	<0.1	0.1	mg/kg	BRD	9/22/2005	4:59 PM

Note - Results reported on dry weight basis

Methods

Aroclor 1016 - SW-846 8082
Aroclor 1221 - SW-846 8082
Aroclor 1232 - SW-846 8082
Aroclor 1242 - SW-846 8082
Aroclor 1248 - SW-846 8082
Aroclor 1254 - SW-846 8082
Aroclor 1260 - SW-846 8082
"Test Methods for Evaluating Solid Waste: Physical/Chemical Methods", SW-846, Third Edition, U.S. Environmental Protection Agency. Update III, December, 1996.

**James R Reed & Associates (Sample #: 05-16797)

ENVIROCOMPLIANCE LABORATORIES, INC.

P. O. Box 919
Mid Valley Lane
Verona, Virginia 24482
Phone 540 248 1311
Fax 540 248 4604

Certificate of Analysis

Fredrick Co. Sanitation Auth.
Attn: Steve Nicholson
P.O. Box 1877
Winchester, Va 22602

Project Name : Parkins Mill
Date Received: August 28, 2004
Date Sampled : August 30, 2004
Time Sampled : 10:00
Date Issued : September 17, 2004

Sample ID : Sludge

Parameter	Result	Units	DL	Date/Time Prepared	Date/Time Analyzed	Method	Analyst
%SOLIDS	16.15	%	--	08-31/1635	09-02/1400	2540G	CEZ
pH	6.35	SU	--	09-07/1615	09-07/1614	150.1	RAF
Alkalinity	6749	mg/kg	10	09-03/1400	09-03/1545	310.1	NMM
Ammonia (as N)	79.26	mg/kg	3.0	08-31/1411	08-31/1612	350.3	CEZ
TKN (as N)	57036.5	mg/kg	3.0	09-02/1330	09-03/1526	351.4	CEZ
Potassium	1864.4	mg/kg	125	09-02/1333	09-02/1344	258.1	BWM
Phosphorus	435178	mg/kg	2.5	09-10/1000	09-10/1530	365.2	BWM
Copper	189.35	mg/kg	1.25	09-02/0945	09-02/0954	220.1	BWM
Zinc	476.97	mg/kg	.50	09-07/1013	09-07/1024	289.1	BWM
Cadmium	BDL	mg/kg	.50	09-02/1105	09-02/1120	213.1	BWM
Chromium	BDL	mg/kg	2.50	09-03/1527	09-03/1544	218.1	BWM
Nickel	BDL	mg/kg	2.50	09-07/0928	09-07/0937	249.1	BWM
Lead	BDL	mg/kg	5.00	09-01/1549	09-01/1604	239.1	BWM
Arsenic	2.160	mg/kg	5.00	09-08/1044	09-08/1222	206.2	BWM
Mercury	BDL	mg/kg	5.00	09-08/1400	09-09/1225	245.1	BWM
Selenium	BDL	mg/kg	.125	09-02/1453	09-02/1630	270.2	BWM
Molybdenum	BDL	mg/kg	50	08-31/1328	08-31/1340	246.1	BWM
Boron	BDL	mg/kg	12.5	09-16/1100	09-16/1625	4500B	BWM

BDL = Below Detection Limit
**All results based on dry weight

Tamara G. Hostetter
Laboratory Manager

V4854168-1

FCSA RECEIVED SEP 24 2004

ENVIROCOMPLIANCE LABORATORIES, INC.

Certificate of Analysis

P. O. Box 919
Mid Valley Lane
Verona, Virginia 24482
Phone 540 248 1311
Fax 540 248 4604

Fredrick Co. Sanitation Auth.
Attn: Steve Nicholson
P.O. Box 1877
Winchester, Va 22602

Project No. : October 2003
Date Received: October 13, 2003
Date Sampled : October 13, 2003
Time Sampled : 07:30
Date Issued : October 31, 2003

Sample ID : Sludge

Parameter	Result	Units	DL	Date/Time Prepared	Date/Time Analyzed	Method	Analyst
%SOLIDS	11	%	--	10-16/1637	10-17/0842		CEZ
pH	6.1	SU	--	10-14/1340	10-14/1340	150.1	RAF
Alkalinity	907	mg/kg	1	10-27/0925	10-27/1030	310.1	NMM
TKN (as N)	10802.2	mg/kg	5.0	10-15/1500	10-16/1637	351.4	CEZ
Ammonia (as N)	BDL	mg/kg	5.0	10-29/1449	10-29/1650	350.3	CEZ
Phosphorus	141743.6	mg/kg	.50	10-20/1100	10-20/1454	365.3	BWM
Potassium	1719	mg/kg	50	10-24/1410	10-24/1418	7610	BWM
Copper	174.60	mg/kg	.50	10-21/1343	10-21/1354	7210	BWM
Zinc	850.20	mg/kg	.20	10-21/1040	10-21/1053	7950	BWM
Cadmium	BDL	mg/kg	.20	10-17/1511	10-17/1519	7130	BWM
Chromium	BDL	mg/kg	2.00	10-16/1354	10-16/1403	7190	BWM
Nickel	11.80	mg/kg	1.00	10-21/1140	10-21/1149	7520	BWM
Lead	BDL	mg/kg	2.00	10-17/0918	10-17/0927	239.1	BWM
Arsenic	0.85	mg/kg	.20	10-17/1015	10-17/1230	206.2	BWM
Mercury	0.413	mg/kg	.050	10-23/1145	10-24/1111	7470	BWM
Selenium	BDL	mg/kg	.050	10-28/1434	10-28/1544	7740	BWM
Molybdenum	BDL	mg/kg	20	10-16/1105	10-16/1113	7480	BWM
Boron	BDL	mg/kg	2.5	10-27/0945	10-27/1414	4500B	TGH

Tamara G. Hostetter
Laboratory Manager

V3A49618-1

Parkins Mills STP VA 0075191 7/07
Permit Application

Test results for Attachment A.1 of current permit

HRSD
P. O. BOX 5911, VIRGINIA BEACH, VIRGINIA 23471-0911 • (757) 460-2261 FAX (757) 460-6586

ANALYTICAL REPORT

Project: Frederick County - Parkins Mills WWTF
Customer Sample ID: Final Effluent
Project Code: FC_PM
Sample Point: FNE
Sample Date: 05/30/06

Analyte	Method	Unit	Result	Report Limit[1]	QL[2]	Analyst	Analysis Date	Analysis Time
AutoChemistry								
Chloride	SM 4500Cl-B	mg/L	198	1		JGETTI	06/07/06	07:03
Sulfide	SM4500S2-E	mg/L	NA**	1.0		KWILLI	06/01/06	07:40
Dissolved Metals								
Arsenic	EPA 200.8	ug/L	<0.5	0.5	1.0	CBATO	06/08/06	10:45
Volatiles								
1,2-Dichloropropane	EPA 624	ug/L	<5.00	5.00		SLOPEZ	05/31/06	17:04
1,3-Dichloropropylene[3]	EPA 624	ug/L	<10.0	10.0		SLOPEZ	05/31/06	17:04
Methyl bromide	EPA 624	ug/L	<5.00	5.00		SLOPEZ	05/31/06	17:04
Base Neutral Compounds								
2-Chloronaphthalene	EPA 625	ug/L	<5.00	5.00		SLOPEZ	06/07/06	05:55
3,3-Dichlorobenzidine	EPA 625	ug/L	<5.00	5.00		SLOPEZ	06/07/06	05:55
Pesticides & PCB's								
Alpha-BHC	EPA 608	ug/L	<0.050	0.050		RPRICE	06/05/06	12:50
Beta-BHC	EPA 608	ug/L	<0.050	0.050		RPRICE	06/05/06	12:50
Alpha-Endosulfan	EPA 608	ug/L	<0.050	0.050	0.1	RPRICE	06/05/06	12:50
Beta-Endosulfan	EPA 608	ug/L	<0.050	0.050	0.1	RPRICE	06/05/06	12:50
Endosulfan sulfate	EPA 608	ug/L	<0.050	0.050	0.1	RPRICE	06/05/06	12:50
Endrin aldehyde	EPA 608	ug/L	<0.050	0.050		RPRICE	06/05/06	12:50
Heptachlor epoxide	EPA 608	ug/L	<0.050	0.050		RPRICE	06/05/06	12:50
PCB Total[4]	EPA 608	ug/L	<7.00	7.00	7.0	RPRICE	06/05/06	12:50

Subcontracted analyses - see attached sheet

- Strontium 90
- Tritium
- Beta Particle & Photon Activity
- Gross Alpha Particle Activity
- Gamma spec (for calculation)

Notes

[1] Report Limit is lowest concentration at which quantitation is demonstrated.

[2] Quantification Level (QL) obtained from Frederick County Parkins Mills WWTF VPDES permit # VA0075191.

[3] 1,3-Dichloropropylene is the total of cis-1,3-Dichloropropylene and trans-1,3-Dichloropropylene.

[4] PCB Total is the sum concentration of the individual PCB Aroclors.

**Attempted to analyze sample several times but unable to obtain a result due to matrix interference.

Authorization: [signature] **Date:** 06·19·06

HRSD
P. O. BOX 5911, VIRGINIA BEACH, VIRGINIA 23471-0911 • (757) 460-2261 FAX (757) 460-6586

ANALYTICAL REPORT

Project: Frederick County - Parkins Mills WWTF
Customer Sample ID: Field Blank
Project Code: FC_PM
Sample Point: FB
Sample Date: 05/30/06

Analyte	Method	Unit	Result	Report Limit[1]	QL[2]	Analyst	Analysis Date	Analysis Time
Dissolved Metals								
Arsenic	EPA 200.8	ug/L	<0.5	0.5	1.0	CBATO	06/08/06	10:41
Volatiles								
1,2-Dichloropropane	EPA 624	ug/L	<5.00	5.00		SLOPEZ	05/31/06	14:58
1,3-Dichloropropylene[3]	EPA 624	ug/L	<10.0	10.0		SLOPEZ	05/31/06	14:58
Methyl bromide	EPA 624	ug/L	<5.00	5.00		SLOPEZ	05/31/06	14:58
Base Neutral Compounds								
2-Chloronaphthalene	EPA 625	ug/L	<5.00	5.00		SLOPEZ	06/07/06	04:10
3,3-Dichlorobenzidine	EPA 625	ug/L	<5.00	5.00		SLOPEZ	06/07/06	04:10
Pesticides & PCB's								
Alpha-BHC	EPA 608	ug/L	<0.050	0.050		RPRICE	06/05/06	12:26
Beta-BHC	EPA 608	ug/L	<0.050	0.050		RPRICE	06/05/06	12:26
Alpha-Endosulfan	EPA 608	ug/L	<0.050	0.050	0.1	RPRICE	06/05/06	12:26
Beta-Endosulfan	EPA 608	ug/L	<0.050	0.050	0.1	RPRICE	06/05/06	12:26
Endosulfan sulfate	EPA 608	ug/L	<0.050	0.050	0.1	RPRICE	06/05/06	12:26
Endrin aldehyde	EPA 608	ug/L	<0.050	0.050		RPRICE	06/05/06	12:26
Heptachlor epoxide	EPA 608	ug/L	<0.050	0.050		RPRICE	06/05/06	12:26
PCB Total[4]	EPA 608	ug/L	<7.00	7.00	7.0	RPRICE	06/05/06	12:26

Notes

[1] Report Limit is lowest concentration at which quantitation is demonstrated.

[2] Quantification Level (QL) obtained from Frederick County Parkins Mills WWTF VPDES permit # VA0075191.

[3] 1,3-Dichloropropylene is the total of cis-1,3-Dichloropropylene and trans-1,3-Dichloropropylene.

[4] PCB Total is the sum concentration of the individual PCB Aroclors.

Authorization: _____ **Date:** 06 19 06

HRSD
P. O. BOX 5911, VIRGINIA BEACH, VIRGINIA 23471-0911 • (757) 460-2261 FAX (757) 460-6586

ANALYTICAL REPORT

Project: Frederick County - Parkins Mills WWTF
Customer Sample ID: Final Effluent
Project Code: FC_PM
Sample Point: FNE
Sample Date: 06/12/06
Sample Receipt Date: 06/13/06

Analyte	Method	Unit	Result	Report Limit[1]	QL[2]	Analyst	Analysis Date	Analysis Time
AutoChemistry								
Sulfide	SM4500S2-E	mg/L	<1.0	1.0		KWILLI	06/14/06	7:30

Notes
[1] Report Limit is lowest concentration at which quantitation is demonstrated.
[2] Quantification Level (QL) obtained from Frederick County Parkins Mills WWTF VPDES permit # VA0075191.

Authorization: [signature] Date: 06·19·06

RESAMPLE FNE-1

GENERAL ENGINEERING LABORATORIES, LLC
2040 Savage Road Charleston SC 29407 - (843) 556-8171 - www.gel.com

Certificate of Analysis

Company : Hampton Roads Sanitation District
Address : Central Environmental Lab
1432 Air Rail Avenue
Virginia Beach, Virginia 23455
Contact: Kathy Hopson
Project: **Fredrick County**

Report Date: June 26, 2006

Client Sample ID: FC_PM FNE
Sample ID: 164150001
Matrix: Waste Water
Collect Date: 30-MAY-06 11:58
Receive Date: 02-JUN-06
Collector: Client

Project: HRSD00104
Client ID: HRSD001

Parameter	Qualifier	Result	Uncertainty	DL	RL	Units	DF	AnalystDate	Time	Batch	Method
Rad Gamma Spec Analysis											
Gammaspec, Gamma, Liquid (Standard List)											
Actinium-228	U	ND	+/-12.1	13.8	20.0	pCi/L		MJH1 06/14/06	1734	536554	1
Americium-241	U	ND	+/-10.4	18.5	25.0	pCi/L					
Antimony-124	U	ND	+/-5.30	11.2	5.00	pCi/L					
Antimony-125	U	ND	+/-4.48	9.04	10.0	pCi/L					
Barium-133	U	ND	+/-2.17	3.81	5.00	pCi/L					
Barium-140	U	ND	+/-16.0	25.6	30.0	pCi/L					
Beryllium-7	U	ND	+/-15.5	26.8	50.0	pCi/L					
Bismuth-212	U	ND	+/-12.7	23.8	50.0	pCi/L					
Bismuth-214	U	ND	+/-5.58	7.56	10.0	pCi/L					
Cerium-139	U	ND	+/-1.80	3.02	5.00	pCi/L					
Cerium-141	UI	ND	+/-5.90	6.42	10.0	pCi/L					
Cerium-144	U	ND	+/-13.3	23.0	50.0	pCi/L					
Cesium-134	U	ND	+/-1.90	3.50	5.00	pCi/L					
Cesium-136	U	ND	+/-4.48	8.22	15.0	pCi/L					
Cesium-137	U	ND	+/-1.90	3.38	5.00	pCi/L					
Chromium-51	U	ND	+/-22.3	37.9	50.0	pCi/L					
Cobalt-56	U	ND	+/-1.97	3.66	5.00	pCi/L					
Cobalt-57	U	ND	+/-1.57	2.67	5.00	pCi/L					
Cobalt-58	U	ND	+/-1.69	3.48	10.0	pCi/L					
Cobalt-60	U	ND	+/-2.01	3.84	5.00	pCi/L					
Europium-152	U	ND	+/-4.87	9.18	20.0	pCi/L					
Europium-154	U	ND	+/-4.83	10.5	20.0	pCi/L					
Europium-155	U	ND	+/-6.56	11.5	20.0	pCi/L					
Iridium-192	U	ND	+/-1.98	3.60	10.0	pCi/L					
Iron-59	U	ND	+/-3.50	7.23	10.0	pCi/L					
Lead-210	U	ND	+/-342	565	750	pCi/L					
Lead-212	U	ND	+/-3.50	6.58	15.0	pCi/L					
Lead-214	U	ND	+/-3.84	7.18	10.0	pCi/L					
Manganese-54	U	ND	+/-1.68	3.25	5.00	pCi/L					
Mercury-203	U	ND	+/-2.43	4.15	5.00	pCi/L					
Neodymium-147	U	ND	+/-45.8	53.5	100	pCi/L					
Neptunium-239	U	ND	+/-12.0	20.4	25.0	pCi/L					
Niobium-94	U	ND	+/-1.65	2.94	5.00	pCi/L					
Niobium-95	U	ND	+/-2.27	4.68	5.00	pCi/L					
Potassium-40	U	ND	+/-30.1	36.9	100	pCi/L					
Promethium-144	U	ND	+/-1.70	3.13	5.00	pCi/L					
Promethium-146	U	ND	+/-2.19	4.22	5.00	pCi/L					
Radium-228	U	ND	+/-12.1	13.8	20.0	pCi/L					

GENERAL ENGINEERING LABORATORIES
2040 Savage Road Charleston SC 29407 - (843) 556-8171 - www.gel.com

Certificate of Analysis

Company : Hampton Roads Sanitation District
Address : Central Environmental Lab
1432 Air Rail Avenue
Virginia Beach, Virginia 23455
Contact: Kathy Hopson
Project: **Fredrick County**

Report Date: June 26, 2006

Client Sample ID: FC_PM FNE
Sample ID: 164150001

Project: HRSD00104
Client ID: HRSD001

Parameter	Qualifier	Result	Uncertainty	DL	RL	Units	DF	AnalystDate	Time	Batch	Method
Rad Gamma Spec Analysis											
Gammaspec, Gamma, Liquid (Standard List)											
Ruthenium-106	U	ND	+/-15.2	28.2	50.0	pCi/L					
Silver-110m	U	ND	+/-1.80	3.32	5.00	pCi/L					
Sodium-22	U	ND	+/-1.73	3.76	5.00	pCi/L					
Thallium-208	U	ND	+/-3.21	3.36	10.0	pCi/L					
Thorium-230	U	ND	+/-5.58	7.56	20.0	pCi/L					
Thorium-234	U	ND	+/-97.4	184	250	pCi/L					
Tin-113	U	ND	+/-2.27	4.21	10.0	pCi/L					
Uranium-235	UI	ND	+/-19.2	24.5	50.0	pCi/L					
Uranium-238	U	ND	+/-97.4	184	250	pCi/L					
Yttrium-88	U	ND	+/-2.75	4.76	10.0	pCi/L					
Zinc-65	U	ND	+/-4.70	6.81	10.0	pCi/L					
Zirconium-95	U	ND	+/-3.71	6.47	10.0	pCi/L					
Rad Gas Flow Proportional Counting											
GFPC, Gross A/B, liquid											
Alpha	U	ND	+/-0.944	1.84	5.00	pCi/L		JXS4	06/18/06	1018 537361	2
Beta		17.3	+/-2.55	3.74	5.00	pCi/L					
GFPC, Sr90, liquid											
Strontium-90	U	ND	+/-0.657	1.24	2.00	pCi/L		BXF1	06/07/06	2333 535952	3
Rad Liquid Scintillation Analysis											
LSC, Tritium Dist, Liquid											
Tritium	U	ND	+/-369	654	700	pCi/L		NXP1	06/16/06	2210 535931	4

The following Analytical Methods were performed

Method	Description
1	EPA 901.1
2	EPA 900.0
3	EPA 905.0 Modified
4	EPA 906.0 Modified

Analyst Comments

Surrogate/Tracer recovery	Test	Result	Nominal	Recovery%	Acceptable Limits
Strontium-90	GFPC, Sr90, liquid			70	(25%-125%)

Notes:
The Qualifiers in this report are defined as follows :

* A quality control analyte recovery is outside of specified acceptance criteria
< Result is less than value reported
> Result is greater than value reported

GENE AL ENGINEERING LABORAT IES, LLC
2040 Savage Road Charleston SC 29407 - (843) 556-8171 - www.gel.com

Certificate of Analysis

Company : Hampton Roads Sanitation District
Address : Central Environmental Lab
1432 Air Rail Avenue
Virginia Beach, Virginia 23455
Contact: Kathy Hopson
Project: **Fredrick County**

Report Date: June 26, 2006

Client Sample ID: FC_PM FNE
Sample ID: 164150001
Project: HRSD00104
Client ID: HRSD001

Parameter	Qualifier	Result	Uncertainty	DL	RL	Units	DF	AnalystDate	Time	Batch	Method

A The TIC is a suspected aldol-condensation product
B Target analyte was detected in the associated blank
BD Results are either below the MDC or tracer recovery is low
C Analyte has been confirmed by GC/MS analysis
D Results are reported from a diluted aliquot of the sample
H Analytical holding time was exceeded
J Value is estimated
NA Spike recovery limits do not apply. Sample concentration exceeds spike concentration by 4X or more
R Sample results are rejected
U Analyte was analyzed for, but not detected above the MDL, MDA, or LOD.
UI Gamma Spectroscopy--Uncertain identification
X Consult Case Narrative, Data Summary package, or Project Manager concerning this qualifier
Y QC Samples were not spiked with this compound
* RPD of sample and duplicate evaluated using +/-RL. Concentrations are <5X the RL
h Preparation or preservation holding time was exceeded

The above sample is reported on an "as received" basis.

Where the analytical method has been performed under NELAP certification, the analysis has met all of the requirements of the NELAC standard unless qualified on the Certificate of Analysis.

This data report has been prepared and reviewed in accordance with General Engineering Laboratories, LLC standard operating procedures. Please direct any questions to your Project Manager, Joanne Harley.

Reviewed by

Parkins Mills STP VA 0075191 7/07
Permit Application

Part E.
Summary test results for previously submitted WET test data.
Samples taken on:

08/07/06 to 08/10/06
08/08/05 to 08/11/05
08/23/04 to 08/26/04
08/04/03 to 08/07/03

Client: Frederick County Sani[illegible]n Authority
Project ID: FCSA0601
Client Sample ID: Parkins Mill Outfall 001
Permit No: VA0075191
Sample Period: 8/7/06 to 8/10/06

Plant Copy

Coastal Bioanalysts, Inc.

Report of Analysis: Whole Effluent Toxicity (WET)

Submitted To:	Prepared By:
Mr. Henry Sliwinski Parkins Mill Treatment Plant 158 West Parkins Mill Road Winchester, VA 22602	Coastal Bioanalysts, Inc. 6400 Enterprise Court Gloucester, VA 23061 (804) 694-8285 www.coastalbio.com Contact: Peter F. De Lisle, Technical Director

Acute Test Results*				
Species-Test Method	48-h LC50	95% C.L.	$T.U._{Ac}$	NOAEC
C. dubia EPA 2002.0	>100	N/A	1.00	100
P. promelas EPA 2000.0	>100	N/A	1.00	100

Chronic Test Results*									
Species-Test Method	Endpoint	NOEC	LOEC	ChrV	PMSD	$T.U._C$	IC25	48-h NOAEC	$T.U._{Ac}$
C. dubia	Survival	100	>100	>100	N/A	1.00	N/A	100	1.00
EPA 1002.0	Reproduction	100	>100	>100	28	1.00	>100	N/A	N/A
P. promelas	Survival	100	>100	>100	N/A	1.00	N/A	100	1.00
EPA 1000.0	Biomass	100	>100	>100	15	1.00	>100	N/A	N/A

*Note: Details regarding test conduct and data analysis provided in attached bench sheets and printouts as applicable.

Acute Test Biological Summary Data		Sample Concentration (%)					
Species-Method	Endpoint	Control	6.3	13	25	50	100
C. dubia EPA 2002.0	Survival (%):	100	100	100	100	100	100
P. promelas EPA 2000.0	Survival (%):	100	100	100	100	100	100

Chronic Test Biological Summary Data		Sample Concentration (%)					
Species-Method	Endpoint	Control	20.5	41	82	91	100
C. dubia EPA 1002.0	Survival (%):	100	100	90	90	80	90
	Repro (# young):	20.5	18.3	16.6	18.8	15.0	17.8
P. promelas EPA 1000.0	Survival (%):	93	85	95	93	93	85
	Biomass (mg):	0.656	0.603	0.677	0.642	0.649	0.611

Test Information Species-Method	Start Date/Time End Date/Time	Organism Source	Hatch/Harvest Date/Time	Acclimation Temp.	Acclimation Water	Test Aerated?
C. dubia EPA 2002.0	8/9/06 1500 8/11/06 1450	CBI Stock	8/8/06 1615 8/9/06 0900	25° C	Mod. Hard Syn. FW	No
P. promelas EPA 2000.0	8/9/06 1450 8/11/06 1445	CBI Stock	7/31/06 1400 8/1/06 1400	25° C	Mod. Hard Syn. FW	No
C. dubia EPA 1002.0	8/8/06 1345 8/14/06 1515	CBI Stock	8/7/06 1605 8/7/06 2200	25° C	Mod. Hard Syn. FW	No
P. promelas EPA 1000.0	8/8/06 1410 8/15/06 1320	CBI Stock	8/7/06 1600 8/8/06 0800	25° C	Mod. Hard Syn. FW	No

EPA Laboratory ID: VA01116

Client: Frederick County Sanitation Authority
Project ID: FCSA0501
Client Sample ID: Parkins Mill Outfall 001
Permit No: VA0075191
Sample Period: 8/8/05 to 8/11/05

Coastal Bioanalysts, Inc.

Report of Analysis: Whole Effluent Toxicity (WET)

Submitted To:	Prepared By:
Mr. Henry Sliwinski Parkins Mill Treatment Plant 158 West Parkins Mill Road Winchester, VA 22602	Coastal Bioanalysts, Inc. 6400 Enterprise Court Gloucester, VA 23061 (804) 694-8285 www.coastalbio.com Contact: Peter F. De Lisle, Technical Director

Acute Test Results*

Species-Test Method	48-h LC50	95% C.L.	$T.U._{Ac}$	NOAEC
C. dubia EPA 2002.0	>100	N/A	<1.00	100
P. promelas EPA 2000.0	>100	N/A	<1.00	100

Chronic Test Results*

Species-Test Method	Endpoint	NOEC	LOEC	ChrV	PMSD	$T.U._C$	IC25	48-h LC50	LC50 95% C.L.	$T.U._{Ac}$
C. dubia	Survival	91	100	95.4	N/A	1.10	N/A	>100	N/A	<1.00
EPA 1002.0	Reproduction	91	100	95.4	28	1.10	96.3	N/A	N/A	N/A
P. promelas	Survival	100	>100	>100	N/A	1.00	N/A	>100	N/A	<1.00
EPA 1000.0	Biomass	100	>100	>100	15	1.00	>100	N/A	N/A	N/A

*Note: Details regarding test conduct and data analysis provided in attached bench sheets and printouts as applicable.

AcuteTest Biological Summary Data		Sample Concentration (%)					
Species-Method	Endpoint	Control	6.3	13	25	50	100
C. dubia EPA 2002.0	Survival (%):	100	100	100	100	100	100
P. promelas EPA 2000.0	Survival (%):	100	100	100	100	100	100

Chronic Test Biological Summary Data		Sample Concentration (%)					
Species-Method	Endpoint	Control	20.5	41	82	91	100
C. dubia EPA 1002.0	Survival (%):	100	100	100	90	100	60
	Repro (# young):	21.7	19.4	17.9	18.8	18.4	14.8
P. promelas EPA 1000.0	Survival (%):	100	98	95	95	93	100
	Biomass (mg):	0.447	0.430	0.393	0.403	0.386	0.409

Test Information Species-Method	Start Date/Time End Date/Time	Organism Source	Hatch/Harvest Date/Time	Acclimation Temp.	Acclimation Water	Test Aerated?
C. dubia EPA 2002.0	8/10/05 1245 8/12/05 1300	CBI Stock	8/9/05 1600 8/10/05 1030	25° C	Mod. Hard Syn. FW	No
P. promelas EPA 2000.0	8/10/05 1305 8/12/05 1310	CBI Stock	7/30/05 1100 7/31/05 1100	25° C	Mod. Hard Syn. FW	No
C. dubia EPA 1002.0	8/9/05 1145 8/15/05 1245	CBI Stock	8/8/05 1620 8/8/05 2200	25° C	Mod. Hard Syn. FW	No
P. promelas EPA 1000.0	8/9/05 1210 8/16/05 1230	CBI Stock	8/8/05 1530 8/9/05 1100	25° C	Mod. Hard Syn. FW	No

Total No. Printouts/Bench Sheets Attached: 17

Client: Frederick County Sa[illegible] on Authority
Project ID: FCSA0401
Client Sample ID: Parkins Mill Outfall 001
Permit No: VA0075191
Sample Period: 8/23/04 to 8/26/04

Coastal Bioanalysts, Inc.

Report of Analysis: Whole Effluent Toxicity (WET)

Submitted To:	Prepared By:
Mr. Henry Sliwinski Parkins Mill Treatment Plant 158 West Parkins Mill Road Winchester, VA 22602	Coastal Bioanalysts, Inc. 6400 Enterprise Court Gloucester, VA 23061 (804) 694-8285 www.coastalbio.com Contact: P[illegible]er F. De Lisle, Technical Director

Acute Test Results*

Species-Test Method	48-h LC50	95% C.L.	$T.U._{Ac}$	NOAEC
C. dubia EPA 2002.0	>100	N/A	<1.00	100
P. promelas EPA 2000:0	>100	N/A	<1.00	100

Chronic Test Results*

Species-Test Method	Endpoint	NOEC	LOEC	ChrV	PMSD	$T.U._C$	IC25	48-h LC50	LC50 95% C.L.	$T.U._{Ac}$
C. dubia EPA 1002.0	Survival	100	>100	>100	N/A	1.00	N/A	>100	N/A	<1.00
	Reproduction	100	>100	>100	29	1.00	>100	N/A	N/A	N/A
P. promelas EPA 1000.0	Survival	100	>100	>100	N/A	1.00	N/A	>100	N/A	<1.00
	Biomass	100	>100	>100	24	1.00	>100	N/A	N/A	N/A

*Note: Details regarding test conduct and data analysis provided in attached bench sheets and printouts as applicable.

Acute Test Biological Summary Data

Species-Method	Endpoint	Sample Concentration (%) Control	6.3	13	25	50	100
C. dubia EPA 2002.0	Survival (%):	100	100	100	100	100	95
P. promelas EPA 2000.0	Survival (%):	100	100	100	100	100	100

Chronic Test Biological Summary Data

Species-Method	Endpoint	Sample Concentration (%) Control	20.5	41	82	91	100
C. dubia EPA 1002.0	Survival (%):	100	80	80	90	100	90
	Repro (# young):	18.9	19.1	17.2	18.3	18.8	15.3
P. promelas EPA 1000.0	Survival (%):	95	93	100	100	95	98
	Biomass (mg):	0.495	0.444	0.518	0.483	0.445	0.493

Test Information Species-Method	Start Date/Time End Date/Time	Organism Source	Hatch/Harvest Date/Time	Acclimation Temp.	Acclimation Water	Test Aerated?
C. dubia EPA 2002.0	8/25/04 1425 8/27/04 1435	CBI Stock	8/24/04 1630 8/25/04 1020	25° C	Mod. Hard Syn. FW	No
P. promelas EPA 2000.0	8/25/04 1430 8/27/04 1440	CBI Stock	8/12/04 1600 8/13/04 1100	25° C	Mod. Hard Syn. FW	No
C. dubia EPA 1002.0	8/24/04 1310 8/30/04 1405	CBI Stock	8/23/04 1620 8/23/04 2200	25° C	Mod. Hard Syn. FW	No
P. promelas EPA 1000.0	8/24/04 1335 8/31/04 1300	CBI Stock	8/23/04 1530 8/24/04 0930	25° C	Mod. Hard Syn. FW	No

Total No. Printouts/Bench Sheets Attached: 17

Client: Frederick County Sa[illegible]tion Authority
Project ID: FCSA0301
Client Sample ID: Parkins Mill Outfall 001
Permit No: VA0075191
Sample Period: 8/4/03 to 8/7/03

Coastal Bioanalysts, Inc.

Report of Analysis: Whole Effluent Toxicity (WET)

Submitted To:	Prepared By:
Mr. Henry Sliwinski Parkins Mill Treatment Plant 158 West Parkins Mill Road Winchester, VA 22602	Coastal Bioanalysts, Inc. 6400 Enterprise Court Gloucester, VA 23061 (804) 694-8285 www.coastalbio.com Contact: Peter F. De Lisle, Technical Director

Acute Test Results*

Species-Test Method	48-h LC50	95% C.L.	$T.U._{Ac}$	NOAEC
C. dubia EPA 2002.0	>100	N/A	<1.00	100
P. promelas EPA 2000.0	>100	N/A	<1.00	100

Chronic Test Results*

Species-Test Method	Endpoint	NOEC	LOEC	ChrV	PMSD	$T.U._C$	IC25	48-h LC50	LC50 95% C.L.	$T.U._{Ac}$
C. dubia EPA 1002.0	Survival	100	>100	>100	N/A	1.00	N/A	>100	N/A	<1.00
	Reproduction	91	100	95.4	29	1.09	91.9	N/A	N/A	N/A
P. promelas EPA 1000.0	Survival	100	>100	>100	N/A	1.00	N/A	>100	N/A	<1.00
	Biomass	100	>100	>100	29	1.00	>100	N/A	N/A	N/A

*Note: Details regarding test conduct and data analysis provided in attached bench sheets and printouts as applicable.

Acute Test Biological Summary Data

Species-Method	Endpoint	Sample Concentration (%) Control	6.3	13	25	50	100
C. dubia EPA 2002.0	Survival (%):	100	100	85	95	100	100
P. promelas EPA 2000.0	Survival (%):	95	100	100	100	100	100

Chronic Test Biological Summary Data

Species-Method	Endpoint	Sample Concentration (%) Control	20.5	41	82	91	100
C. dubia EPA 1002.0	Survival (%):	100	90	100	100	90	90
	Repro (# young):	21.7	20.7	18.7	21.5	16.4	15.1
P. promelas EPA 1000.0	Survival (%):	93	75	85	83	73	90
	Biomass (mg):	0.410	0.399	0.429	0.444	0.426	0.452

Test Information Species-Method	Start Date/Time End Date/Time	Organism Source	Hatch/Harvest Date/Time	Acclimation Temp.	Acclimation Water	Test Aerated?
C. dubia EPA 2002.0	8/6/03 1500 8/8/03 1500	CBI Stock	8/5/03 1635 8/6/03 1000	25° C	Mod. Hard Syn. FW	No
P. promelas EPA 2000.0	8/6/03 1440 8/8/03 1500	CBI Stock	7/27/03 1600 7/28/03 1600	25° C	Mod. Hard Syn. FW	No
C. dubia EPA 1002.0	8/5/03 1125 8/11/03 1220	CBI Stock	8/4/03 1640 8/4/03 2200	25° C	Mod. Hard Syn. FW	No
P. promelas EPA 1000.0	8/5/03 1215 8/12/03 1220	CBI Stock	8/4/03 1600 8/5/03 0900	25° C	Mod. Hard Syn. FW	No

Total No. Printouts/Bench Sheets Attached: 18

Parkins Mills STP VA 0075191 7/07
Permit Application

Sludge Permit Application
Part B and Sludge Permit Application A. 5 and A. 6

B.2. Topographic Map
B.3. Process Flow Schematic and Site Map
B.3. Process Narrative
B.3. Hydraulic Loadings
B.4. Maintenance Performed by Contractors

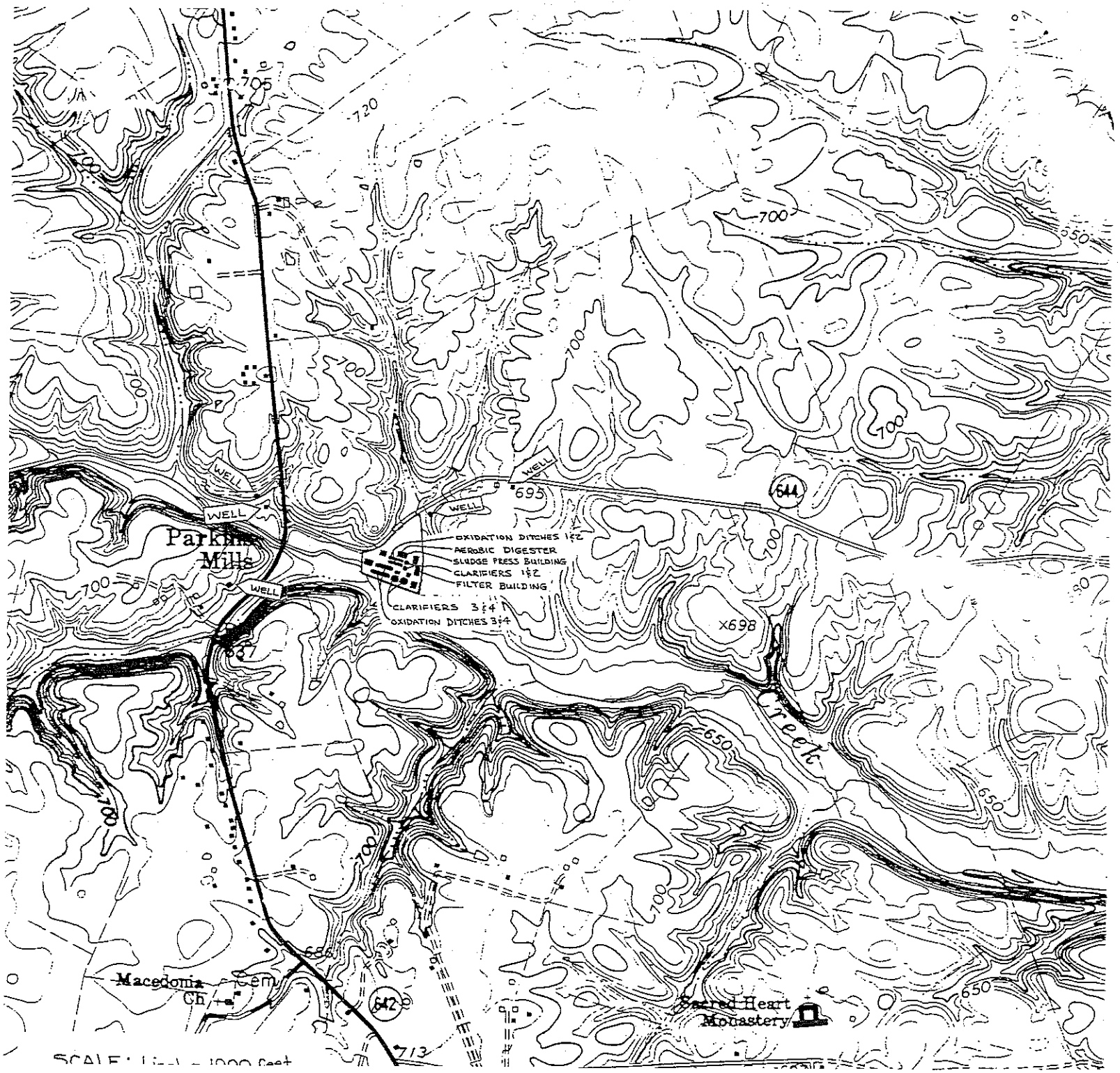

705
720
700
650
WELL
WELL
WELL
WELL
WELL
695
644
Parkline Mills
OXIDATION DITCHES 1&2
AEROBIC DIGESTER
SLUDGE PRESS BUILDING
CLARIFIERS 1&2
FILTER BUILDING
CLARIFIERS 3&4
OXIDATION DITCHES 3&4
X698
Creek
650
700
686
Macedonia Cem
Ch
642
713
Sacred Heart Monastery

SCHEMATIC OF WATER FLOW

1 Bar Screen/Grit Removal
2 0.25 MGD Oxydation Ditch
3 0.75 MGD Oxydation Ditch
4 0.25 MGD Clarifier
5 0.75 MGD Clarifier
6 0 MGD Sand Filter
7 UV Disinfection
8 Post Aeration
9 Sludge Digester
10 Sludge Belt Filter Press

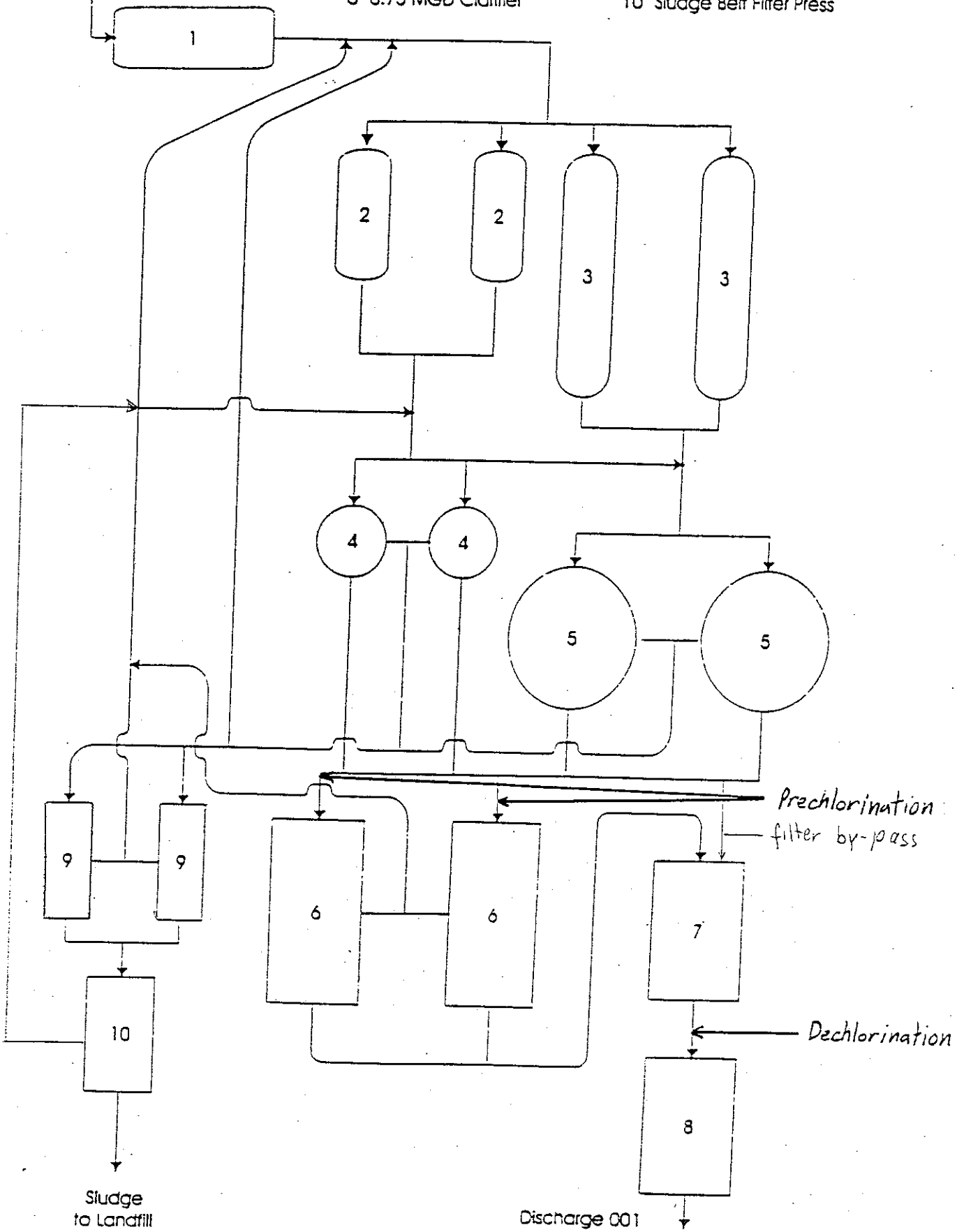

'ARKINS MILLS

WASTEWATER TREATMENT PLANT

SITE MAP

1996 N.T.S.

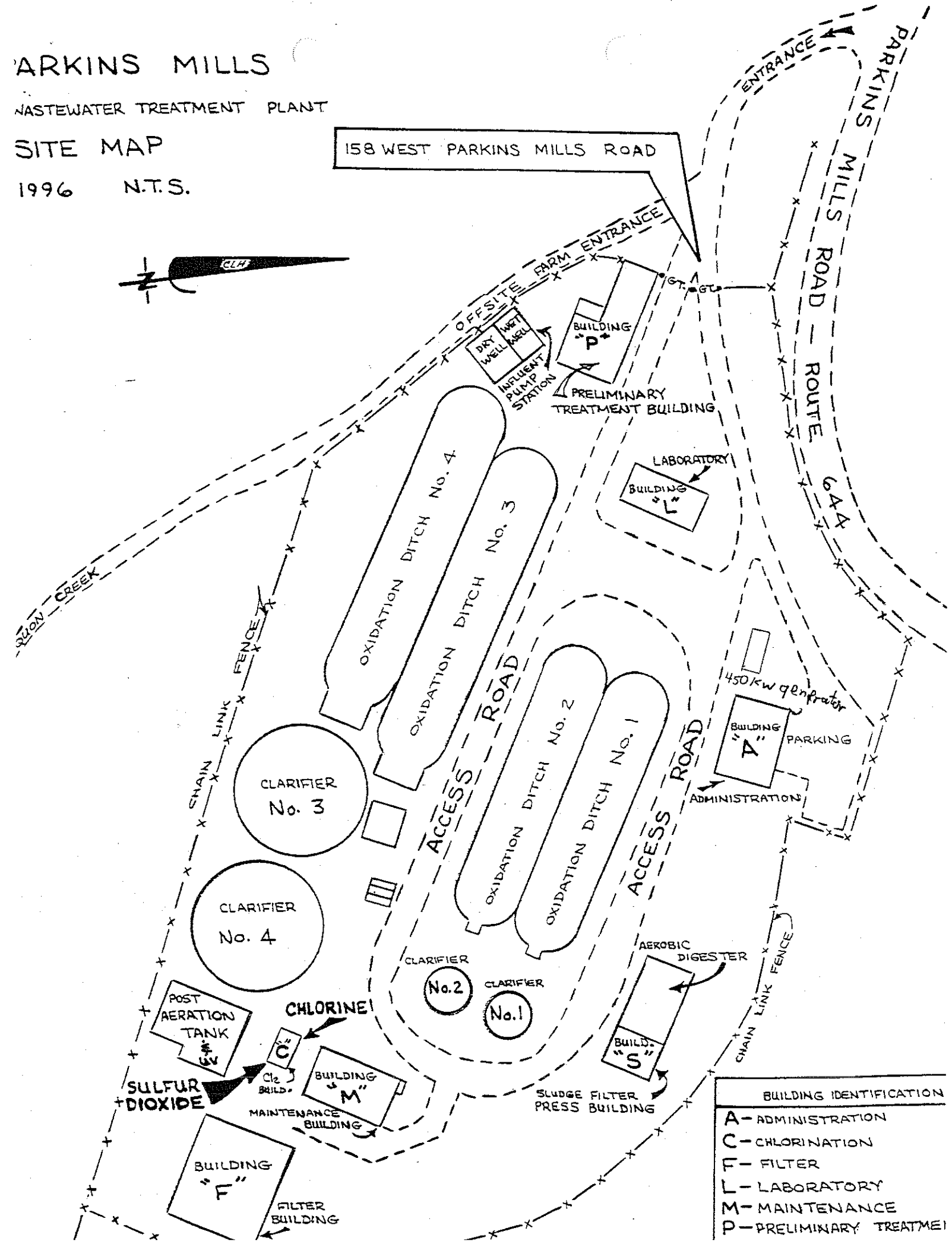

PROCESS

The preliminary treatment process uses screening and grit removal to remove debris from the influent raw sewage.

Screening

In - *Raw sewage* flows by gravity from the raw sewage collection system through the screening channel.

Process In the screening channel, a mechanical screen captures large debris (primarily rags) and periodically conveys it to a trash can.

- Out The collected *rags* are hauled to the landfill. The *screened raw sewage* flows by gravity to the grit removal process.

Grit Removal

In - *Screened raw sewage* enters the vortex grit chamber.

Process In the chamber, dense debris (primarily grit) settles by gravity while a paddle stirs the wastewater to keep organic matter and other light debris suspended. Periodically, the settled grit is removed, washed, dewatered, and conveyed to a trash can by grit handling equipment.

- Out The collected *grit* is hauled to the landfill. The *screened and degritted wastewater* flows by gravity to the influent pump station where it is pumped to the secondary treatment process.

CONTROL

The preliminary treatment system includes a bar screen, bar rack, grit chamber, and grit handling equipment train. The operator regulates these units to control specific aspects of the treatment process.

Mechanically-Cleaned Bar Screen

The mechanically-cleaned bar screen is a conveyor belt of parallel bars (6 mm apart) partially submerged in the screening channel. Periodically the screen is driven by a conveyor motor to move captured debris to a perforated trash can. A switch starts the motor, a timer stops it.

The operator regulates the conveyor to control screen cleaning frequency and duration.

PROCESS

The secondary treatment process uses biological treatment and clarification to remove pollutants from the preliminary effluent. First, the biological treatment process stimulates naturally occurring microorganisms to consume ammonia and organic carbon compounds. Then, the clarification process removes the microorganisms from the wastewater.

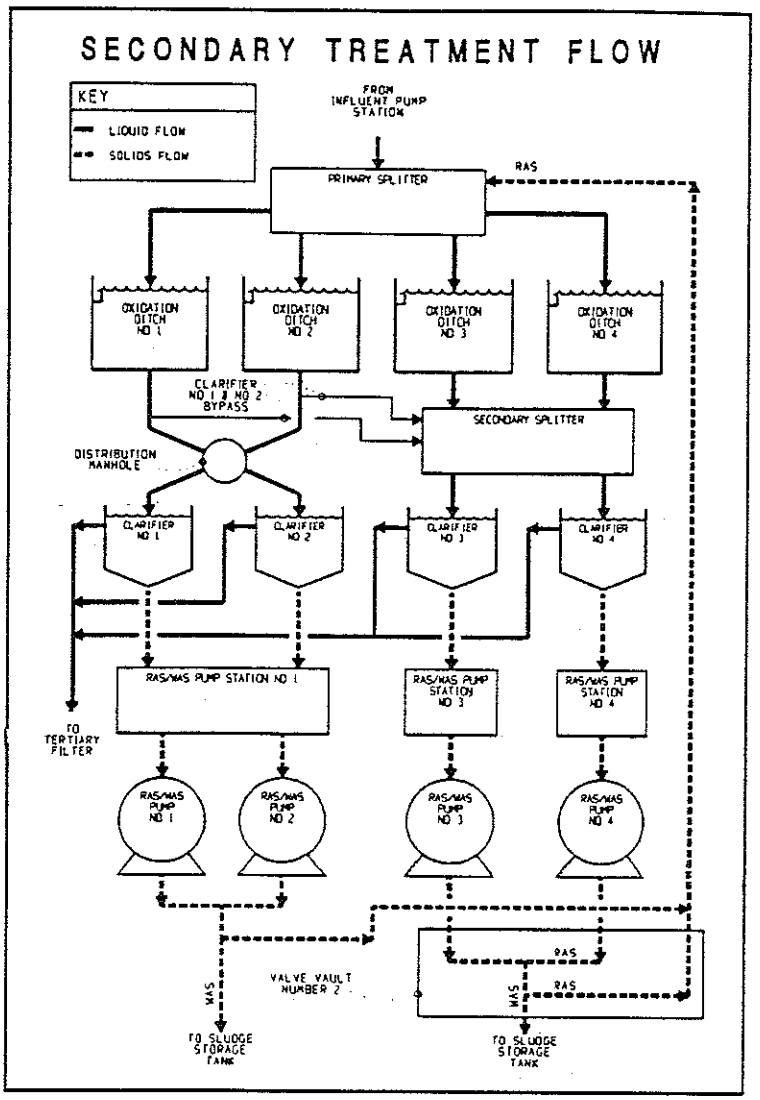

Figure 1

Biological Treatment

In → Pollutant-laden *preliminary effluent* is pumped from the influent pump station to the primary splitter. There it combines with *return activated sludge* (RAS) which contains pollutant-consuming microorganisms. The splitter proportions the combined flow to each oxidation ditch in service.

Process In each ditch, brush aerators stir the wastewater to supply oxygen to the microorganisms and to keep them in suspension and in contact with the pollutants. The resultant slurry, called activated sludge mixed liquor, circulates around the oxidation ditch allowing time for the microorganisms to join together in colonies (called floc particles) and consume pollutants (see figure 2 on page 6 for a discussion of microorganism activity).

→ Out The mixed liquor, displaced by influent flow, overflows the oxidation ditch to the clarification process.

Clarification

In → *Oxidation ditch effluent*, a mixture of floc particles and biologically treated wastewater, is proportionally distributed to the clarifiers in service.

Process In each clarifier, a baffle breaks the force of the influent flow and distributes it evenly over the liquid surface to prevent turbulence. In these quiescent conditions, floc particles settle to the bottom of the clarifier as activated sludge and floatable solids rise to the surface as scum, allowing the water to clarify.

- Out The *scum* is collected and periodically pumped to the sludge storage tank. The settled *activated sludge* is constantly pumped from the clarifiers. Most of it is directed to the oxidation ditches as return activated sludge (RAS) to consume more pollutants. Periodically, a controlled portion is directed to the sludge storage tank as waste activated sludge (WAS) to prevent solids build-up in the secondary treatment system. The *clarified wastewater*, displaced by influent flow, overflows to the tertiary treatment process.

CONTROL

The secondary treatment system includes the oxidation ditches, clarifiers, and pump stations. The operator regulates these units to control specific aspects of the treatment process.

Oxidation Ditches

The four parallel oxidation ditches are oblong tanks which receive flow from the primary splitter. Because ditches 3 and 4 hold approximately three times more volume than ditches 1 and 2, the splitter distributes three times more flow to them. Each ditch is equipped with an adjustable weir and single-speed horizontal brush aerators (two aerators in ditches 1 and 2; four in ditches 3 and 4).

The brush aerators rotate to mix and aerate the wastewater. Aeration occurs as the brushes splash the water, forcing tiny air bubbles through the water, thereby adding dissolved oxygen (DO). The more aerators in operation and the faster they rotate, the greater the aeration.

Weir height determines the liquid level in the ditches and therefore the depth of submergence of the brush aerators. The deeper the aerators are submerged, the greater the aeration.

The operator regulates the aerators and the weirs to control DO and Nocardia bacteria.

DO

DO is necessary for beneficial bacteria to treat wastewater. If DO is low, autotrophic bacteria are the first to slow down and thus nitrification (the conversion of ammonia to nitrates) is reduced. Additionally, if DO is low, filamentous organisms grow in excess and create too much webbing in the floc particles, thereby reducing floc density and settleability.

Operator action: Monitor DO in each ditch daily. When DO approaches a limit, adjust any combination of the following to keep DO within the optimum range: number of aerators running, speed of aerators running, height of weir.

The design DO is 1.0-2.0 mg/l. However, experience will dictate the best range for optimum biological treatment.

- DO too low → reduced autotrophic bacteria activity → inadequate nitrification → high NH_3-N in plant effluent → permit violation.
- DO too low → excess growth of filamentous organisms → poor settling in clarifiers → high TSS in plant effluent → permit violation.
- DO too high → unnecessary expense.

Nocardia Bacteria

Nocardia are a filamentous bacteria which, in small amounts, can benefit the biological treatment process by consuming organic carbon compounds too complex for other microorganisms. But, in large amounts, Nocardia generate a quantity of greasy foam that is difficult to remove.

Because Nocardia require dissolved oxygen to survive, their growth can be controlled by periodically stopping aeration. Without dissolved oxygen, Nocardia die while competing beneficial microorganisms survive. But, if aeration stops for too long, the beneficial microorganisms will also die.

Operator action: Once daily during a low flow period, stop aerators long enough to control Nocardial growth.

The anticipated off-time is 2-3 hours per day. Experience will dictate the off-time needed to control Nocardial growth.

- Aerator off-time too short → excess growth of Nocardia bacteria → excess foam in oxidation ditches → excess scum in clarifiers → excess TSS in clarifier effluent → permit violation.
- Aerator off-time too long → aerobic organism die-off → reduced biological treatment → permit violation.

Clarifiers

The four clarifiers are circular tanks which receive flow from the oxidation ditches. Clarifiers 3 and 4 each accept three times more flow than either clarifier 1 or 2. Flow from ditches 3 and 4 goes to the secondary splitter where it is distributed to clarifiers 3 and/or 4. Flow from ditches 1 and 2 goes to either 1) the distribution manhole where it is distributed to clarifiers 1 and/or 2, or 2) the secondary splitter where it is distributed to clarifiers 3 and/or 4. The flow path is selected according to the plant influent flow rate (see "System Configuration").

Each clarifier is equipped with scum removing equipment which includes a baffle and a skimmer. The baffle at the effluent trough prevents scum from leaving with the

PROCESS

The tertiary treatment process uses gravity filtration to remove suspended solids from the secondary clarifier effluent.

Gravity Filtration

In → *Secondary clarifier effluent* flows by gravity to the gravity sand filters. The wastewater contains the settleable and colloidal solids which have managed to pass through the secondary treatment process.

Process As the wastewater passes down through each sand filter, the solids are attracted to the surface of the sand particles and trapped between them. Periodically, a backwashing system washes the solids from the sand and then pumps the dirty washwater to a washwater trough.

→ Out The *washwater* drains from the trough to the influent pump station. The *filtered wastewater* flows by gravity to the final treatment process.

CONTROL

The tertiary treatment system consists of two gravity filters. The operator regulates the filters to control the treatment process.

Gravity Filters

The two parallel gravity filters are rectangular sand beds that receive equal flow. Each bed is divided into many independent cells, each cell with its own influent and effluent port. Cell independence allows backwashing to occur in one cell, while the rest of the filter continues to operate.

Each filter is equipped with a backwashing system which periodically cleans the filter, one cell at a time. The backwashing system includes a backwash pump and a washwater hood, both attached to a carriage that moves along the length of the filter.

The backwash pump pulls filtered water from the effluent port of two adjacent cells and pushes it up through the sand in the cell being backwashed. The upward force of the water dislodges solids and carries them to the surface where the resultant slurry is trapped, as washwater, under the washwater hood.

The washwater hood completely covers the cell being backwashed. The hood is equipped with a vertex skimmer and a washwater pump. The skimmer blade scrapes loose the dense mat of organic matter on the surface of the filter media to allow the backwash flow to move up evenly through the filter. The washwater pump moves the washwater to the washwater launder.

A timer starts the backwashing system. A low-water float stops it.
Chlorine gas is added by manually starting and adjusting the chlorinators. (See chlorinator O&M manuals for details.)

The operator sets the timer to control backwashing frequency.

Backwashing Frequency

The frequency of backwashing should be often enough to prevent the filter from clogging and blocking flow. If the frequency is too low, a clogged filter will cause the water level in the filter to rise and lift a high-water float. As a safety feature, the high-water float automatically starts the backwashing system.

Operator action: Set off-timer to control how long the backwashing system is off before it starts again.

The anticipated frequency is twice daily or as often as needed to maintain liquid level below high water alarm probe.

- Frequency too low → clogged filter → solids breakthrough → high TSS in filter effluent → poor disinfection → permit violation.
- Frequency too high → unnecessary expense.

Chlorine Addition

Sodium hypochlorite is added to the Gravity Filter Flow Splitter influent pipeline to prevent the development of biological growth within the filter media. (Chlorine is not added to disinfect the wastewater. See Chapter 5 for a discussion of disinfection.)

Biological growth is the result of microorganisms present in the Secondary Clarifier effluent which enter into the filter media, become established, and cause the filter to become clogged. The addition of a low concentration of chlorine to the filter kills the microorganisms, which are then filtered from the wastewater as it passes through the filter media.

The frequency of chlorine addition to the gravity filter should be often enough to prevent the filter from clogging and blocking flow. If the frequency is too low, a clogged filter will cause the water level in the filter to rise and lift a high-water float. Even though the high-water float automatically starts the backwashing system when the water level rises, backwashing may not increase flow-through when there is excessive biological growth on the filter.

PROCESS

Now that most of the solids have been removed from the wastewater, the final treatment process uses disinfection and aeration to insure the wastewater is safe to discharge into the receiving stream.

Ultraviolet Disinfection

In → *Gravity filter effluent*, which may contain pathogens not removed by upstream process, flows by gravity through the UV disinfection channel.

Process In the channel, three disinfection units emit UV light which kills bacteria and viruses in the wastewater by destroying their genetic material.

→ Out The *disinfected wastewater* flows by gravity to the post-aeration process.

Post-Aeration

In → *UV channel effluent*, which contains low oxygen levels, flows first through the post-aeration basins and then over the cascade aerator.

Process In each aeration basin, blowers force air into the water. Then, as the wastewater tumbles down the 13 steps of the cascade aerator, turbulence forces more air into the water.

→ Out The *aerated wastewater*, now the plant effluent, flows by gravity into Opequon Creek.

CONTROL

The final treatment system includes three UV disinfection units and two post-aeration basins. The operator regulates the equipment in these units to control specific aspects of the process.

UV Disinfection Units

The three UV disinfection units are arranged in series, submerged in the UV channel. Each unit is comprised of nine removable modules, each module with eight lamps. One UV intensity probe below each UV unit continuously measures the light intensity in the wastewater (in microwatt-seconds per square centimeter).

The operator cleans lamps and replaces bulbs to control light intensity.

Light Intensity

To disinfect the wastewater, UV light must be intense enough to penetrate the cell wall of the pathogens. UV light intensity is effected by both the condition of the UV lamp and the quality of the wastewater.

UV lamp condition is effected by the age of the lamp and the amount of slime on it's surface. An old or dirty lamp reduces UV light intensity.

The quality of the wastewater, measured as turbidity and suspended solids (TSS), is effected by upstream processes. High turbidity inhibits light transmission through the wastewater thereby reducing the disinfecting power of the light in proportion to its distance from the light source. High TSS, besides inhibiting light transmission, encases bacteria and thus protects them from the light.

Operator action: Monitor UV light intensity. When intensity approaches the limit, check UV lamp condition and wastewater quality to determine the cause. Improve lamp condition by cleaning lamp and/or replacing the bulb. Improve wastewater quality according to careful process performance evaluation of upstream processes.

A suggested UV light intensity is given in the manufacturers O/M manual. Experience will dictate the optimum light intensity for disinfection.

- Low UV light intensity → low level of disinfection → high fecal coliforms in plant effluent → permit violation.

  Note: Only two of the three UV disinfection units need be on at one time; the third is a back-up unit. To insure back-up unit operability, alternate which unit is used as back-up.

Post-Aeration Basins

The two parallel aeration basins are rectangular tanks that receive equal flow. Each basin is equipped with five removable dropleg header assemblies, each header with six air diffusers. All 30 diffusers are evenly spaced along one side of the length of the basin. One rotary blower (298 cfm) supplies air to the headers. One butterfly valve on each header controls air flow into the basins.

The operator regulates the blowers and butterfly valves to control DO.

PROCESS

The solids handling process uses thickening and dewatering to reduce the volume and weight of secondary sludge prior to disposal. First, thickening removes water from the sludge by gravity separation. Then, dewatering removes water from the sludge by compression.

Thickening

- Periodically, *WAS* and *scum* are pumped from the clarifiers-in-service to the sludge storage tank.

ocess In the sludge storage tank, an aerator blows air through the sludge to prevent septicity. Once the tank is full, the aerator is paused prior to each pumping of WAS. This allows solids to settle to the tank bottom as thickened sludge, leaving a layer of clear water, called supernatant, on the surface.

Out The *supernatant*, displaced by incoming WAS, flows by gravity to pump station 1. The *thickened sludge* is periodically pumped to the dewatering process.

Dewatering

In - *Thickened sludge* flows first through the flocculation tank, where it combines with polymer, and then to the belt filter press.

Process In the flocculation tank, a mixer gently stirs the sludge and polymer together. The polymer attracts sludge solids which normally repel each other. As they are pulled together, the solids release the water that was trapped in the spaces between them. This flocculation process creates larger sludge particles for separation in the belt filter press.

In the belt filter press, the flocculated sludge is compressed between two porous belts as they pass over and under rollers to squeeze out the water (or filtrate).

- *Out* The *dewatered sludge* is conveyed to a truck and then hauled to the landfill. The *filtrate* flows by gravity to RAS/WAS pump station 1 or to clarifier 1 and 2.

CONTROL

The solids handling system includes a sludge storage tank and a dewatering system. The operator regulates these units to control specific aspects of the treatment process.

Sludge Storage Tank

The sludge storage tank is a rectangular tank divided in half by a wall. In the center bottom of the wall, a valve is left open to allow the two halves to operate as one. Each half receives equal WAS flow.

The tank is equipped with an aeration system which blows air bubbles through the sludge in both halves of the tank to prevent septicity. Periodically, the blowers (rated at 400 cfm) stop to allow solids to settle.

The operator regulates the blowers to control sludge thickening.

Sludge Thickening

Sludge thickening occurs during the settle period. First, sludge solids separate from the water by gravity. Then incoming WAS displaces the clear supernatant, leaving behind a thicker sludge. Sludge thickness depends on how many solids have settled during the settle period. If the blowers are off too long, the sludge becomes septic and does not settle well; if the blowers are not off long enough, the solids do not have time to settle.

Sludge is thickened as much as possible, without compromising supernatant quality, before it is pumped to the dewatering system. A thin sludge (less than 1.5% solids) reduces the efficiency of the dewatering process.

Operator action: Prior to pumping WAS to the sludge storage tank, turn off blowers long enough to obtain a layer of clear supernatant at least 3 feet deep. When WAS pumping is finished, turn blowers back on.

The anticipated blower off-time is 12-48 hours. Experience will dictate the off-time needed for optimum sludge thickening.

Note: Warmer weather may call for an decrease in off-time; colder weather an increase.

- Blower off-time too long → septic sludge → poor settling in storage tank → inadequately thickened sludge pumped to dewatering system → inadequately dewatered sludge → unnecessary expense.
- Blower off-time too long → septic sludge → strong odors → complaints by neighbors.
- Blower off-time too short → inadequate settling in storage tank → inadequately thickened sludge pumped to dewatering system → inadequately dewatered sludge → unnecessary expense.

PARKINS MILL WWTP
HYDRAULIC LOADINGS

(Assumes a RAS flow rate of 100% of average influent flow.)

KEY

- WASTEWATER FLOW
- ALTERNATE WASTEWATER FLOWS
- RETURN ACTIVATED FLOW (RAS)
- AVERAGE FLOW
- PEAK FLOW

HYDRAULIC LOAD WITH CLARIFIERS 1 AND 2

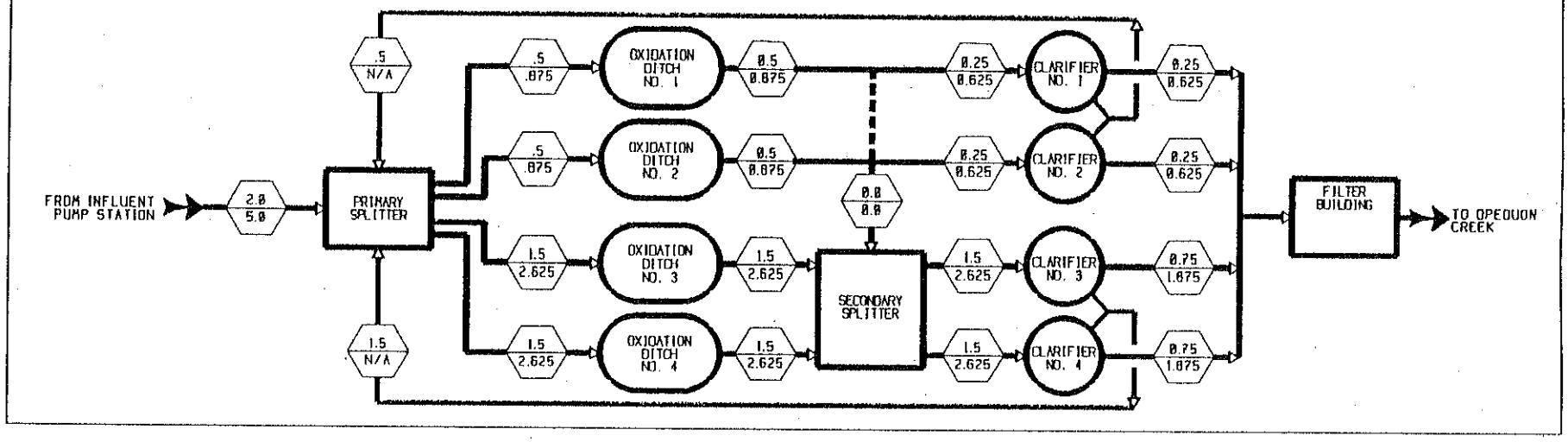

HYDRAULIC LOAD WITHOUT CLARIFIERS 1 AND 2

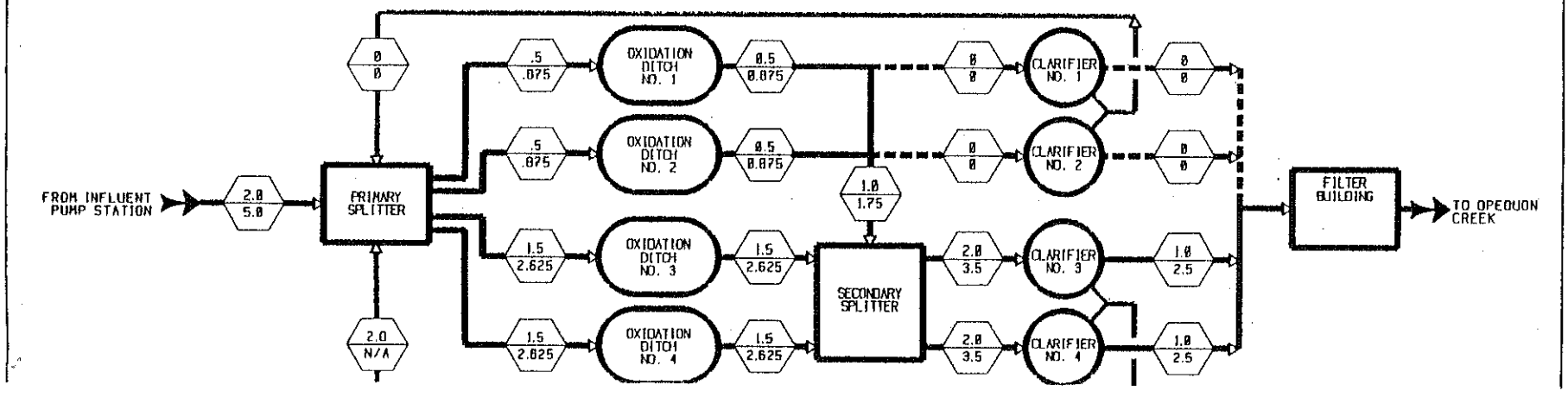

Parkins Mills STP VA 0075191

B.4. Operation/Maintenance Performed by Contractors

1. Automation Controls
200 Main St., Newport News VA 23601
757-599-6884
Performs annual calibration of flow meters.

2. Robicon
500 Hunt Valley Drive, New Kensington PA 15068
724-334-5697
Performs semi-annual PM on 3 - 50hp raw pump and 2 - 7.5hp sludge pump VF drives.

3. Cummins Power Systems, Inc.
1907 Park 100 Drive, Glen Burnie MD 21061-8700
410-590-8700
Performs annual PM on 1 - 450Kw generator

VIRGINIA DEQ NO EXPOSURE CERTIFICATION
FOR EXCLUSION FROM VPDES STORM WATER PERMITTING

Submission of this **No Exposure Certification** constitutes notice that the entity identified below does not require permit authorization for its storm water discharges associated with industrial activity under the VPDES Permit Program due to the existence of a condition of **No Exposure**.

A condition of **No Exposure** exists at an industrial facility when all industrial materials and activities are protected by a storm resistant shelter to prevent exposure to rain, snow, snowmelt, and/or runoff. Industrial materials or activities include, but are not limited to, material handling equipment or activities, industrial machinery, raw materials, intermediate products, by-products, final products, or waste products. Material handling activities include the storage, loading and unloading, transportation, or conveyance of any raw material, intermediate product, final product or waste product. A storm resistant shelter is not required for the following industrial materials and activities:

- drums, barrels, tanks, and similar containers that are tightly sealed, provided those containers are not deteriorated and do not leak. "Sealed" means banded or otherwise secured and without operational taps or valves;
- adequately maintained vehicles used in material handling; and
- final products, other than products that would be mobilized in storm water discharges (e.g., rock salt).

A No Exposure Certification must be provided for each facility qualifying for the No Exposure exclusion. In addition, the exclusion from VPDES permitting is available on a facility-wide basis only, not for individual outfalls. If any industrial activities or materials are or will be exposed to precipitation, the facility is not eligible for the No Exposure exclusion.

By signing and submitting this No Exposure Certification form, the entity below is certifying that a condition of No Exposure exists at its facility or site, and is obligated to comply with the terms and conditions at 9 VAC 25-31-120 E (the VPDES Permit Regulation).

Please Type or Print All Information. ALL INFORMATION ON THIS FORM MUST BE PROVIDED.

1. **Facility Owner Information**

Name: Frederick - Winchester Service Authority

Mailing Address: PO Box 43

City: Winchester State: VA Zip: 22604 Phone: 540 722 3579

2. **Facility/Site Location Information**

DEQ-VALLEY

Facility Name: Parkins Mills STP

Address: 158 West Parkins Mill Rd. AUG 13 2007

City: Winchester State: VA Zip: 22602 TO: _____

Latitude: 36° 06' 27" Longitude: 78° 09' 13" FILE: _____

3. **Was the facility or site previously covered under a VPDES storm water permit?** Yes ☐ No ☑

If "Yes", enter the VPDES permit number: _____

4. **SIC/Activity Codes:** Primary: 4952 Secondary (if applicable): _____

5. **Total size of facility/site associated with industrial activity:** 6 acres

6. **Have you paved or roofed over a formerly exposed pervious area in order to qualify for the No Exposure exclusion?** Yes ☐ No ☑

If "Yes", please indicate approximately how much area was paved or roofed. Completing this question does not disqualify you for the No Exposure exclusion. However, DEQ may use this information in considering whether storm water discharges from your site are likely to have an adverse impact on water quality, in which case you could be required to obtain permit coverage.

Less than one acre ☐ One to five acres ☐ More than five acres ☐

7. Exposure Checklist

Are any of the following materials or activities exposed to precipitation, now or in the foreseeable future? (Please check either "Yes" or "No" in the appropriate box.) **If you answer "Yes" to any of these questions (1) through (11), you are <u>not</u> eligible for the No Exposure exclusion.**

		Yes	No
1.	Using, storing or cleaning industrial machinery or equipment, and areas where residuals from using, storing or cleaning industrial machinery or equipment remain and are exposed to storm water	☐	☑
2.	Materials or residuals on the ground or in storm water inlets from spill/leaks	☐	☑
3.	Materials or products from past industrial activity	☐	☑
4.	Material handling equipment (except adequately maintained vehicles)	☐	☑
5.	Materials or products during loading/unloading or transporting activities	☐	☑
6.	Materials or products stored outdoors (except final products intended for outside use [e.g., new cars] where exposure to storm water does not result in the discharge of pollutants)	☐	☑
7.	Materials contained in open, deteriorated or leaking storage drums, barrels, tanks, and similar containers	☐	☑
8.	Materials or products handled/stored on roads or railways owned or maintained by the discharger	☐	☑
9.	Waste material (except waste in covered, non-leaking containers [e.g., dumpsters])	☐	☑
10.	Application or disposal of process wastewater (unless otherwise permitted)	☐	☑
11.	Particulate matter or visible deposits of residuals from roof stacks and/or vents not otherwise regulated (i.e., under an air quality control permit) and evident in the storm water outflow	☐	☑

8. Certification Statement

I certify under penalty of law that I have read and understand the eligibility requirements for claiming a condition of no exposure and obtaining an exclusion from VPDES storm water permitting; and that there are no discharges of storm water contaminated by exposure to industrial activities or materials from the industrial facility identified in this document (except as allowed under 9 VAC 25-31-120 E 2).

I understand that I am obligated to submit a No Exposure Certification form once every five years to the Department of Environmental Quality and, if requested, to the operator of the local MS4 into which this facility discharges (where applicable). I understand that I must allow the Department, or MS4 operator where the discharge is into the local MS4, to perform inspections to confirm the condition of no exposure and to make such inspection reports publicly available upon request. I understand that I must obtain coverage under a VPDES permit prior to any point source discharge of storm water associated with industrial activity from the facility.

I certify under penalty of law that this document and all attachments were prepared under my direction or supervision in accordance with a system designed to assure that qualified personnel properly gathered and evaluated the information submitted. Based upon my inquiry of the person or persons who manage the system, or those persons directly involved in gathering the information, the information submitted is to the best of my knowledge and belief true, accurate and complete. I am aware there are significant penalties for submitting false information, including the possibility of fine and imprisonment for knowing violations.

Print Name: Jesse W. Moffett

Print Title: Executive Director

Signature: [signature]

Date: 8/2/07

For Department of Environmental Quality Use Only

Accepted/Not Accepted by: _____ Date : _____