RIVANNA
WATER & SEWER AUTHORITY

695 MOORES CREEK LANE
CHARLOTTESVILLE, VA 22902-9016
TEL: 434.977.2970
FAX: 434.293.8858
WWW.RIVANNA.ORG

October 27, 2015

DEQ VALLEY
OCT 30 2015
To:
Date:

Mr. Jason Dameron
Water Permit Writer,
Virginia Department of Environmental Quality
Valley Regional Office
4411 Early Road
Harrisonburg, VA 22801

RE: Reissuance of VPDES Permit VA0025518, Moores Creek Advance Water Resource Facility, Albemarle County

Dear Mr. Dameron:

Enclosed, please find the reissuance application and information for VPDES Permit VA0025518, Moores Creek Advance Water Resource Facility. Rivanna Water and Sewer Authority will be submitting under separate cover Part D Expanded Effluent Testing Data. We are targeting proving this data to you by December 2, 2016.

Please do not hesitate to contact me should you need any further information. I look forward to working with you on this renewal.

Sincerely,

Timothy E. Castillo
Wastewater Manager

CC: file

FACILITY NAME AND PERMIT NUMBER:

Moores Creek Advanced Water Resource Recovery Facility: VA0025518

Form Approved 1/14/99
OMB Number 2040-0086

FORM **2A** NPDES

NPDES FORM 2A APPLICATION OVERVIEW

APPLICATION OVERVIEW

Form 2A has been developed in a modular format and consists of a "Basic Application Information" packet and a "Supplemental Application Information" packet. The Basic Application Information packet is divided into two parts. All applicants must complete Parts A and C. Applicants with a design flow greater than or equal to 0.1 mgd must also complete Part B. Some applicants must also complete the Supplemental Application Information packet. The following items explain which parts of Form 2A you must complete.

BASIC APPLICATION INFORMATION:

A. **Basic Application Information for all Applicants.** All applicants must complete questions A.1 through A.8. A treatment works that discharges effluent to surface waters of the United States must also answer questions A.9 through A.12.

B. **Additional Application Information for Applicants with a Design Flow ≥ 0.1 mgd.** All treatment works that have design flows greater than or equal to 0.1 million gallons per day must complete questions B.1 through B.6.

C. **Certification.** All applicants must complete Part C (Certification).

SUPPLEMENTAL APPLICATION INFORMATION:

D. **Expanded Effluent Testing Data.** A treatment works that discharges effluent to surface waters of the United States and meets one or more of the following criteria must complete Part D (Expanded Effluent Testing Data):

1. Has a design flow rate greater than or equal to 1 mgd,
2. Is required to have a pretreatment program (or has one in place), or
3. Is otherwise required by the permitting authority to provide the information.

E. **Toxicity Testing Data.** A treatment works that meets one or more of the following criteria must complete Part E (Toxicity Testing Data):

1. Has a design flow rate greater than or equal to 1 mgd,
2. Is required to have a pretreatment program (or has one in place), or
3. Is otherwise required by the permitting authority to submit results of toxicity testing.

F. **Industrial User Discharges and RCRA/CERCLA Wastes.** A treatment works that accepts process wastewater from any significant industrial users (SIUs) or receives RCRA or CERCLA wastes must complete Part F (Industrial User Discharges and RCRA/CERCLA Wastes). SIUs are defined as:

1. All industrial users subject to Categorical Pretreatment Standards under 40 Code of Federal Regulations (CFR) 403.6 and 40 CFR Chapter I, Subchapter N (see instructions); and
2. Any other industrial user that:
   a. Discharges an average of 25,000 gallons per day or more of process wastewater to the treatment works (with certain exclusions); or
   b. Contributes a process wastestream that makes up 5 percent or more of the average dry weather hydraulic or organic capacity of the treatment plant; or
   c. Is designated as an SIU by the control authority.

G. **Combined Sewer Systems.** A treatment works that has a combined sewer system must complete Part G (Combined Sewer Systems).

ALL APPLICANTS MUST COMPLETE PART C (CERTIFICATION)

FACILITY NAME AND PERMIT NUMBER:
Moores Creek Advanced Water Resource Recovery Facility: VA0025518

Form Approved 1/14/99
OMB Number 2040-0086

BASIC APPLICATION INFORMATION

PART A. BASIC APPLICATION INFORMATION FOR ALL APPLICANTS:

All treatment works must complete questions A.1 through A.8 of this Basic Application Information packet.

A.1. Facility Information.

Facility name: Moores Creek Advanced Water Resouce Recovery Facility

Mailing Address: 695 Moores Creek Lane
Charlottesville, VA 22902

Contact person: Timothy E. Castillo

Title: Wastewater Manager

Telephone number: (434) 977-2970

Facility Address (not P.O. Box): Same as above

A.2. Applicant Information. If the applicant is different from the above, provide the following:

Applicant name: Rivanna Water and Sewer Authority

Mailing Address: Same as above

Contact person: Same as above

Title:

Telephone number:

Is the applicant the owner or operator (or both) of the treatment works?

✓ owner ✓ operator

Indicate whether correspondence regarding this permit should be directed to the facility or the applicant.

___ facility ✓ applicant

A.3. Existing Environmental Permits. Provide the permit number of any existing environmental permits that have been issued to the treatment works (include state-issued permits).

NPDES	VA 0025518	PSD	
UIC		Other	VAN040076
RCRA		Other	VAR051387

A.4. Collection System Information. Provide information on municipalities and areas served by the facility. Provide the name and population of each entity and, if known, provide information on the type of collection system (combined vs. separate) and its ownership (municipal, private, etc.).

Name	Population Served	Type of Collection System	Ownership
City of Charlotesville	45,000	Separate	Municipal
Albermarle County	61,000	Separate	Municipal

Total population served 106,000

A.5. Indian Country.

a. Is the treatment works located in Indian Country?

_____ Yes ✓ No

b. Does the treatment works discharge to a receiving water that is either in Indian Country or that is upstream from (and eventually flows through) Indian Country?

_____ Yes ✓ No

A.6. Flow. Indicate the design flow rate of the treatment plant (i.e., the wastewater flow rate that the plant was built to handle). Also provide the average daily flow rate and maximum daily flow rate for each of the last three years. Each year's data must be based on a 12-month time period with the 12th month of "this year" occurring no more than three months prior to this application submittal.

a. Design flow rate 15 mgd

	Two Years Ago	Last Year	This Year	
b. Annual average daily flow rate	9.788	10.755	10.041	mgd
c. Maximum daily flow rate	30.829	42.600	30.676	mgd

A.7. Collection System. Indicate the type(s) of collection system(s) used by the treatment plant. Check all that apply. Also estimate the percent contribution (by miles) of each.

✓ Separate sanitary sewer 100 %

_____ Combined storm and sanitary sewer _____ %

A.8. Discharges and Other Disposal Methods.

a. Does the treatment works discharge effluent to waters of the U.S.? ✓ Yes _____ No

If yes, list how many of each of the following types of discharge points the treatment works uses:

i. Discharges of treated effluent 1

ii. Discharges of untreated or partially treated effluent _____

iii. Combined sewer overflow points _____

iv. Constructed emergency overflows (prior to the headworks) _____

v. Other _____ _____

b. Does the treatment works discharge effluent to basins, ponds, or other surface impoundments that do not have outlets for discharge to waters of the U.S.? _____ Yes ✓ No

If yes, provide the following for each surface impoundment:

Location: _____

Annual average daily volume discharged to surface impoundment(s) _____ mgd

Is discharge _____ continuous or _____ intermittent?

c. Does the treatment works land-apply treated wastewater? _____ Yes ✓ No

If yes, provide the following for each land application site:

Location: _____

Number of acres: _____

Annual average daily volume applied to site: _____ Mgd

Is land application _____ continuous or _____ intermittent?

d. Does the treatment works discharge or transport treated or untreated wastewater to another treatment works? _____ Yes ✓ No

If yes, describe the mean(s) by which the wastewater from the treatment works is discharged or transported to the other treatment works (e.g., tank truck, pipe).

_____

If transport is by a party other than the applicant, provide:

Transporter name: _____

Mailing Address: _____

_____

Contact person: _____

Title: _____

Telephone number: _____

For each treatment works that receives this discharge, provide the following:

Name: _____

Mailing Address: _____

_____

Contact person: _____

Title: _____

Telephone number: _____

If known, provide the NPDES permit number of the treatment works that receives this discharge. _____

Provide the average daily flow rate from the treatment works into the receiving facility. NA mgd

e. Does the treatment works discharge or dispose of its wastewater in a manner not included in A.8.a through A.8.d above (e.g., underground percolation, well injection)? ____ Yes ✓ No

If yes, provide the following for each disposal method:

Description of method (including location and size of site(s) if applicable):

_____

Annual daily volume disposed of by this method: _____

Is disposal through this method ____ continuous or ____ intermittent?

FACILITY NAME AND PERMIT NUMBER:

Moores Creek Advanced Water Resource Recovery Facility: VA0025518

Form Approved 1/14/99
OMB Number 2040-0086

WASTEWATER DISCHARGES:

If you answered "yes" to question A.8.a, complete questions A.9 through A.12 **once for each outfall** (including bypass points) through which effluent is discharged. Do not include information on combined sewer overflows in this section. **If you answered "no" to question A.8.a**, go to Part B, "Additional Application Information for Applicants with a Design Flow Greater than or Equal to 0.1 mgd."

A.9. Description of Outfall.

a. Outfall number: 001

b. Location: Albermarle County, VA
(City or town, if applicable) (Zip Code)

(County) (State)

N38 01' 06" (Latitude) W78 27' 30" (Longitude)

c. Distance from shore (if applicable): N/A ft.

d. Depth below surface (if applicable): N/A ft.

e. Average daily flow rate: 10.041 mgd

f. Does this outfall have either an intermittent or a periodic discharge? ____ Yes ✓ No (go to A.9.g.)

If yes, provide the following information:

Number of times per year discharge occurs: ____

Average duration of each discharge: ____

Average flow per discharge: ____ mgd

Months in which discharge occurs: ____

g. Is outfall equipped with a diffuser? ____ Yes ✓ No

A.10. Description of Receiving Waters.

a. Name of receiving water: Moores Creek, a tributrary to Rivanna River

b. Name of watershed (if known): James Middle

United States Soil Conservation Service 14-digit watershed code (if known): ____

c. Name of State Management/River Basin (if known): James River Basin

United States Geological Survey 8-digit hydrologic cataloging unit code (if known): ____

d. Critical low flow of receiving stream (if applicable):
acute ____ cfs chronic ____ cfs

e. Total hardness of receiving stream at critical low flow (if applicable): ____ mg/l of $CaCO_3$

FACILITY NAME AND PERMIT NUMBER:
Moores Creek Advanced Water Resource Recovery Facility: VA0025518

Form Approved 1/14/99
OMB Number 2040-0086

A.11. Description of Treatment.

a. What levels of treatment are provided? Check all that apply.

✓ Primary ✓ Secondary
✓ Advanced _____ Other. Describe: _____

b. Indicate the following removal rates (as applicable):

Design BOD_5 removal or Design $CBOD_5$ removal	95	%
Design SS removal	95	%
Design P removal	90	%
Design N removal	90	%
Other _____		%

c. What type of disinfection is used for the effluent from this outfall? If disinfection varies by season, please describe.

ultra-violet disinfection

If disinfection is by chlorination, is dechlorination used for this outfall? _____ Yes _____ No

d. Does the treatment plant have post aeration? ✓ Yes _____ No

A.12. Effluent Testing Information. All Applicants that discharge to waters of the US must provide effluent testing data for the following parameters. Provide the indicated effluent testing required by the permitting authority for each outfall through which effluent is discharged. Do not include information on combined sewer overflows in this section. All information reported must be based on data collected through analysis conducted using 40 CFR Part 136 methods. In addition, this data must comply with QA/QC requirements of 40 CFR Part 136 and other appropriate QA/QC requirements for standard methods for analytes not addressed by 40 CFR Part 136. At a minimum, effluent testing data must be based on at least three samples and must be no more than four and one-half years apart.

Outfall number: 001

PARAMETER	MAXIMUM DAILY VALUE		AVERAGE DAILY VALUE		
	Value	Units	Value	Units	Number of Samples
pH (Minimum)	6.4	s.u.			
pH (Maximum)	7.6	s.u.			
Flow Rate	13.005	MGD	9.264	MGD	31
Temperature (Winter)	58	oF	56	oF	31
Temperature (Summer)	78	oF	75	oF	31

* For pH please report a minimum and a maximum daily value

POLLUTANT		MAXIMUM DAILY DISCHARGE		AVERAGE DAILY DISCHARGE			ANALYTICAL METHOD	ML / MDL
		Conc.	Units	Conc.	Units	Number of Samples		
CONVENTIONAL AND NONCONVENTIONAL COMPOUNDS.								
BIOCHEMICAL OXYGEN	BOD-5							
DEMAND (Report one)	CBOD-5	3	mg/l	1/13	mg/l	8	SM 5210-B	1mg/l
FECAL COLIFORM		19	CFU/100ml	2	CFU/100l	35	EPA1603	<1cfu/100 ml
TOTAL SUSPENDED SOLIDS (TSS)		1.7	mg/l	0.86	mg/l	8	SM2450-D	1mg/l

END OF PART A.
REFER TO THE APPLICATION OVERVIEW TO DETERMINE WHICH OTHER PARTS OF FORM 2A YOU MUST COMPLETE

BASIC APPLICATION INFORMATION

PART B. ADDITIONAL APPLICATION INFORMATION FOR APPLICANTS WITH A DESIGN FLOW GREATER THAN OR EQUAL TO 0.1 MGD (100,000 gallons per day).

All applicants with a design flow rate ≥ 0.1 mgd must answer questions B.1 through B.6. All others go to Part C (Certification).

B.1. Inflow and Infiltration. Estimate the average number of gallons per day that flow into the treatment works from inflow and/or infiltration.

500,000 gpd

Briefly explain any steps underway or planned to minimize inflow and infiltration.

RWSA, the City of Charlottesville and the Albermarle County Service Authority are continuing their I&I plan

B.2. Topographic Map. Attach to this application a topographic map of the area extending at least one mile beyond facility property boundaries. This map must show the outline of the facility and the following information. (You may submit more than one map if one map does not show the entire area.)

a. The area surrounding the treatment plant, including all unit processes.

b. The major pipes or other structures through which wastewater enters the treatment works and the pipes or other structures through which treated wastewater is discharged from the treatment plant. Include outfalls from bypass piping, if applicable.

c. Each well where wastewater from the treatment plant is injected underground.

d. Wells, springs, other surface water bodies, and drinking water wells that are: 1) within 1/4 mile of the property boundaries of the treatment works, and 2) listed in public record or otherwise known to the applicant.

e. Any areas where the sewage sludge produced by the treatment works is stored, treated, or disposed.

f. If the treatment works receives waste that is classified as hazardous under the Resource Conservation and Recovery Act (RCRA) by truck, rail, or special pipe, show on the map where that hazardous waste enters the treatment works and where it is treated, stored, and/or disposed.

B.3. Process Flow Diagram or Schematic. Provide a diagram showing the processes of the treatment plant, including all bypass piping and all backup power sources or redundancy in the system. Also provide a water balance showing all treatment units, including disinfection (e.g, chlorination and dechlorination). The water balance must show daily average flow rates at influent and discharge points and approximate daily flow rates between treatment units. Include a brief narrative description of the diagram.

B.4. Operation/Maintenance Performed by Contractor(s).

Are any operational or maintenance aspects (related to wastewater treatment and effluent quality) of the treatment works the responsibility of a contractor? ____Yes ✓ No

If yes, list the name, address, telephone number, and status of each contractor and describe the contractor's responsibilities (attach additional pages if necessary).

Name: _____

Mailing Address: _____

Telephone Number: _____

Responsibilities of Contractor: _____

B.5. Scheduled Improvements and Schedules of Implementation. Provide information on any uncompleted implementation schedule or uncompleted plans for improvements that will affect the wastewater treatment, effluent quality, or design capacity of the treatment works. If the treatment works has several different implementation schedules or is planning several improvements, submit separate responses to question B.5 for each. (If none, go to question B.6.)

a. List the outfall number (assigned in question A.9) for each outfall that is covered by this implementation schedule.

_____

b. Indicate whether the planned improvements or implementation schedule are required by local, State, or Federal agencies.

____Yes ____No

c If the answer to B.5.b is "Yes," briefly describe, including new maximum daily inflow rate (if applicable).

_____

d. Provide dates imposed by any compliance schedule or any actual dates of completion for the implementation steps listed below, as applicable. For improvements planned independently of local, State, or Federal agencies, indicate planned or actual completion dates, as applicable. Indicate dates as accurately as possible.

Implementation Stage	Schedule MM / DD / YYYY	Actual Completion MM / DD / YYYY
– Begin construction	___/ ___/ _____	___/ ___/ _____
– End construction	___/ ___/ _____	___/ ___/ _____
– Begin discharge	___/ ___/ _____	___/ ___/ _____
– Attain operational level	___/ ___/ _____	___/ ___/ _____

e. Have appropriate permits/clearances concerning other Federal/State requirements been obtained? ____Yes ____No

Describe briefly: _____

_____

B.6. EFFLUENT TESTING DATA (GREATER THAN O.1 MGD ONLY).

Applicants that discharge to waters of the US must provide effluent testing data for the following parameters. Provide the indicated effluent testing required by the permitting authority for each outfall through which effluent is discharged. Do not include information on combined sewer overflows in this section. All information reported must be based on data collected through analysis conducted using 40 CFR Part 136 methods. In addition, this data must comply with QA/QC requirements of 40 CFR Part 136 and other appropriate QA/QC requirements for standard methods for analytes not addressed by 40 CFR Part 136. At a minimum, effluent testing data must be based on at least three pollutant scans and must be no more than four and one-half years old.

Outfall Number: 001

POLLUTANT	MAXIMUM DAILY DISCHARGE		AVERAGE DAILY DISCHARGE			ANALYTICAL METHOD	ML / MDL
	Conc.	Units	Conc.	Units	Number of Samples		
CONVENTIONAL AND NONCONVENTIONAL COMPOUNDS.							
AMMONIA (as N)	0.347	mg/l	0.229	mg/l	16	SM4500:NH3	0.2 mg/l
CHLORINE (TOTAL RESIDUAL, TRC)	N/A						
DISSOLVED OXYGEN	11.0	mg/l	9.4	mg/l	62	SM4500-0G	0.1 mg/l
TOTAL KJELDAHL NITROGEN (TKN)	0.193	mg/l	0.114	mg/l	8	SM4500Norg.	0.28 mg/l
NITRATE PLUS NITRITE NITROGEN	1.49	mg/l	1.002	mg/l	8	SM4500NO3 E	0.01 mg/l
OIL and GREASE							
PHOSPHORUS (Total)	0.174	mg/l	0.128	mg/l	8	EPA 365.3	0.01 mg/l
TOTAL DISSOLVED SOLIDS (TDS)							
OTHER							

END OF PART B.
REFER TO THE APPLICATION OVERVIEW TO DETERMINE WHICH OTHER PARTS OF FORM 2A YOU MUST COMPLETE

FACILITY NAME AND PERMIT NUMBER:

Moores Creek Advanced Water Resource Recovery Facility: VA0025518

Form Approved 1/14/99
OMB Number 2040-0086

BASIC APPLICATION INFORMATION

PART C. CERTIFICATION

All applicants must complete the Certification Section. Refer to instructions to determine who is an officer for the purposes of this certification. All applicants must complete all applicable sections of Form 2A, as explained in the Application Overview. Indicate below which parts of Form 2A you have completed and are submitting. By signing this certification statement, applicants confirm that they have reviewed Form 2A and have completed all sections that apply to the facility for which this application is submitted.

Indicate which parts of Form 2A you have completed and are submitting:

✓ Basic Application Information packet

Supplemental Application Information packet:

_____ Part D (Expanded Effluent Testing Data)

✓ Part E (Toxicity Testing: Biomonitoring Data)

_____ Part F (Industrial User Discharges and RCRA/CERCLA Wastes)

_____ Part G (Combined Sewer Systems)

ALL APPLICANTS MUST COMPLETE THE FOLLOWING CERTIFICATION.

I certify under penalty of law that this document and all attachments were prepared under my direction or supervision in accordance with a system designed to assure that qualified personnel properly gather and evaluate the information submitted. Based on my inquiry of the person or persons who manage the system or those persons directly responsible for gathering the information, the information is, to the best of my knowledge and belief, true, accurate, and complete. I am aware that there are significant penalties for submitting false information, including the possibility of fine and imprisonment for knowing violations.

Name and official title: Timothy E. Castillo, Wastewater Manager

Signature: [signature]

Telephone number: (434) 977-2970

Date signed: 10/26/2015

Upon request of the permitting authority, you must submit any other information necessary to assess wastewater treatment practices at the treatment works or identify appropriate permitting requirements.

SEND COMPLETED FORMS TO:

FACILITY NAME AND PERMIT NUMBER:

Moores Creek Advanced Water Resource Recovery Facility: VA0025518

Form Approved 1/14/99
OMB Number 2040-0086

SUPPLEMENTAL APPLICATION INFORMATION

PART D. EXPANDED EFFLUENT TESTING DATA

Refer to the directions on the cover page to determine whether this section applies to the treatment works.

Effluent Testing: 1.0 mgd and Pretreatment Treatment Works. If the treatment works has a design flow greater than or equal to 1.0 mgd or it has (or is required to have) a pretreatment program, or is otherwise required by the permitting authority to provide the data, then provide effluent testing data for the following pollutants. Provide the indicated effluent testing information and any other information required by the permitting authority for each outfall through which effluent is discharged. Do not include information on combined sewer overflows in this section. All information reported must be based on data collected through analyses conducted using 40 CFR Part 136 methods. In addition, these data must comply with QA/QC requirements of 40 CFR Part 136 and other appropriate QA/QC requirements for standard methods for analytes not addressed by 40 CFR Part 136. Indicate in the blank rows provided below any data you may have on pollutants not specifically listed in this form. At a minimum, effluent testing data must be based on at least three pollutant scans and must be no more than four and one-half years old.

Outfall number: _____ (Complete once for each outfall discharging effluent to waters of the United States.)

POLLUTANT	MAXIMUM DAILY DISCHARGE				AVERAGE DAILY DISCHARGE					ANALYTICAL METHOD	ML/ MDL
	Conc.	Units	Mass	Units	Conc.	Units	Mass	Units	Number of Samples		
METALS (TOTAL RECOVERABLE), CYANIDE, PHENOLS, AND HARDNESS.											
ANTIMONY											
ARSENIC											
BERYLLIUM											
CADMIUM											
CHROMIUM											
COPPER											
LEAD											
MERCURY											
NICKEL											
SELENIUM											
SILVER											
THALLIUM											
ZINC											
CYANIDE											
TOTAL PHENOLIC COMPOUNDS											
HARDNESS (AS $CaCO_3$)											
Use this space (or a separate sheet) to provide information on other metals requested by the permit writer.											

FACILITY NAME AND PERMIT NUMBER:
Moores Creek Advanced Water Resource Recovery Facility: VA0025518

Form Approved 1/14/99
OMB Number 2040-0086

Outfall number: _____ (Complete once for each outfall discharging effluent to waters of the United States.)

POLLUTANT	MAXIMUM DAILY DISCHARGE				AVERAGE DAILY DISCHARGE					ANALYTICAL METHOD	ML/ MDL
	Conc.	Units	Mass	Units	Conc.	Units	Mass	Units	Number of Samples		
VOLATILE ORGANIC COMPOUNDS.											
ACROLEIN											
ACRYLONITRILE											
BENZENE											
BROMOFORM											
CARBON TETRACHLORIDE											
CLOROBENZENE											
CHLORODIBROMO-METHANE											
CHLOROETHANE											
2-CHLORO-ETHYLVINYL ETHER											
CHLOROFORM											
DICHLOROBROMO-METHANE											
1,1-DICHLOROETHANE											
1,2-DICHLOROETHANE											
TRANS-1,2-DICHLORO-ETHYLENE											
1,1-DICHLOROETHYLENE											
1,2-DICHLOROPROPANE											
1,3-DICHLORO-PROPYLENE											
ETHYLBENZENE											
METHYL BROMIDE											
METHYL CHLORIDE											
METHYLENE CHLORIDE											
1,1,2,2-TETRACHLORO-ETHANE											
TETRACHLORO-ETHYLENE											
TOLUENE											

FACILITY NAME AND PERMIT NUMBER:

Moores Creek Advanced Water Resource Recovery Facility: VA0025518

Form Approved 1/14/99
OMB Number 2040-0086

Outfall number: _____ (Complete once for each outfall discharging effluent to waters of the United States.)

POLLUTANT	MAXIMUM DAILY DISCHARGE				AVERAGE DAILY DISCHARGE					ANALYTICAL METHOD	ML/ MDL
	Conc.	Units	Mass	Units	Conc.	Units	Mass	Units	Number of Samples		
1,1,1-TRICHLOROETHANE											
1,1,2-TRICHLOROETHANE											
TRICHLORETHYLENE											
VINYL CHLORIDE											
Use this space (or a separate sheet) to provide information on other volatile organic compounds requested by the permit writer.											
ACID-EXTRACTABLE COMPOUNDS											
P-CHLORO-M-CRESOL											
2-CHLOROPHENOL											
2,4-DICHLOROPHENOL											
2,4-DIMETHYLPHENOL											
4,6-DINITRO-O-CRESOL											
2,4-DINITROPHENOL											
2-NITROPHENOL											
4-NITROPHENOL											
PENTACHLOROPHENOL											
PHENOL											
2,4,6-TRICHLOROPHENOL											
Use this space (or a separate sheet) to provide information on other acid-extractable compounds requested by the permit writer.											
BASE-NEUTRAL COMPOUNDS.											
ACENAPHTHENE											
ACENAPHTHYLENE											
ANTHRACENE											
BENZIDINE											
BENZO(A)ANTHRACENE											
BENZO(A)PYRENE											

FACILITY NAME AND PERMIT NUMBER:
Moores Creek Advanced Water Resource Recovery Facility: VA0025518

Form Approved 1/14/99
OMB Number 2040-0086

Outfall number: _____ (Complete once for each outfall discharging effluent to waters of the United States.)

POLLUTANT	MAXIMUM DAILY DISCHARGE				AVERAGE DAILY DISCHARGE					ANALYTICAL METHOD	ML/ MDL
	Conc.	Units	Mass	Units	Conc.	Units	Mass	Units	Number of Samples		
3,4 BENZO-FLUORANTHENE											
BENZO(GHI)PERYLENE											
BENZO(K)FLUORANTHENE											
BIS (2-CHLOROETHOXY) METHANE											
BIS (2-CHLOROETHYL)-ETHER											
BIS (2-CHLOROISO-PROPYL) ETHER											
BIS (2-ETHYLHEXYL) PHTHALATE											
4-BROMOPHENYL PHENYL ETHER											
BUTYL BENZYL PHTHALATE											
2-CHLORONAPHTHALENE											
4-CHLORPHENYL PHENYL ETHER											
CHRYSENE											
DI-N-BUTYL PHTHALATE											
DI-N-OCTYL PHTHALATE											
DIBENZO(A,H) ANTHRACENE											
1,2-DICHLOROBENZENE											
1,3-DICHLOROBENZENE											
1,4-DICHLOROBENZENE											
3,3-DICHLOROBENZIDINE											
DIETHYL PHTHALATE											
DIMETHYL PHTHALATE											
2,4-DINITROTOLUENE											
2,6-DINITROTOLUENE											
1,2-DIPHENYLHYDRAZINE											

FACILITY NAME AND PERMIT NUMBER:

Moores Creek Advanced Water Resource Recovery Facility: VA0025518

Form Approved 1/14/99
OMB Number 2040-0086

Outfall number: _____ (Complete once for each outfall discharging effluent to waters of the United States.)

POLLUTANT	MAXIMUM DAILY DISCHARGE				AVERAGE DAILY DISCHARGE					ANALYTICAL METHOD	ML/ MDL
	Conc.	Units	Mass	Units	Conc.	Units	Mass	Units	Number of Samples		
FLUORANTHENE											
FLUORENE											
HEXACHLOROBENZENE											
HEXACHLOROBUTADIENE											
HEXACHLOROCYCLO-PENTADIENE											
HEXACHLOROETHANE											
INDENO(1,2,3-CD)PYRENE											
ISOPHORONE											
NAPHTHALENE											
NITROBENZENE											
N-NITROSODI-N-PROPYLAMINE											
N-NITROSODI- METHYLAMINE											
N-NITROSODI-PHENYLAMINE											
PHENANTHRENE											
PYRENE											
1,2,4-TRICHLOROBENZENE											
Use this space (or a separate sheet) to provide information on other base-neutral compounds requested by the permit writer.											
Use this space (or a separate sheet) to provide information on other pollutants (e.g., pesticides) requested by the permit writer.											

END OF PART D.
REFER TO THE APPLICATION OVERVIEW TO DETERMINE WHICH OTHER PARTS OF FORM 2A YOU MUST COMPLETE

SUPPLEMENTAL APPLICATION INFORMATION

PART E. TOXICITY TESTING DATA

POTWs meeting one or more of the following criteria must provide the results of whole effluent toxicity tests for acute or chronic toxicity for each of the facility's discharge points: 1) POTWs with a design flow rate greater than or equal to 1.0 mgd; 2) POTWs with a pretreatment program (or those that are required to have one under 40 CFR Part 403); or 3) POTWs required by the permitting authority to submit data for these parameters.

- At a minimum, these results must include quarterly testing for a 12-month period within the past 1 year using multiple species (minimum of two species), or the results from four tests performed at least annually in the four and one-half years prior to the application, provided the results show no appreciable toxicity, and testing for acute and/or chronic toxicity, depending on the range of receiving water dilution. Do not include information on combined sewer overflows in this section. All information reported must be based on data collected through analysis conducted using 40 CFR Part 136 methods. In addition, this data must comply with QA/QC requirements of 40 CFR Part 136 and other appropriate QA/QC requirements for standard methods for analytes not addressed by 40 CFR Part 136.
- In addition, submit the results of any other whole effluent toxicity tests from the past four and one-half years. If a whole effluent toxicity test conducted during the past four and one-half years revealed toxicity, provide any information on the cause of the toxicity or any results of a toxicity reduction evaluation, if one was conducted.
- If you have already submitted any of the information requested in Part E, you need not submit it again. Rather, provide the information requested in question E.4 for previously submitted information. If EPA methods were not used, report the reasons for using alternate methods. If test summaries are available that contain all of the information requested below, they may be submitted in place of Part E.

If no biomonitoring data is required, do not complete Part E. Refer to the Application Overview for directions on which other sections of the form to complete.

E.1. Required Tests.

Indicate the number of whole effluent toxicity tests conducted in the past four and one-half years.

____chronic ____acute

E.2. Individual Test Data. Complete the following chart for each whole effluent toxicity test conducted in the last four and one-half years. Allow one column per test (where each species constitutes a test). Copy this page if more than three tests are being reported.

	Test number:_____	Test number:_____	Test number:_____
a. Test information.			
Test species & test method number			
Age at initiation of test			
Outfall number			
Dates sample collected			
Date test started			
Duration			
b. Give toxicity test methods followed.			
Manual title			
Edition number and year of publication			
Page number(s)			
c. Give the sample collection method(s) used. For multiple grab samples, indicate the number of grab samples used.			
24-Hour composite			
Grab			
d. Indicate where the sample was taken in relation to disinfection. (Check all that apply for each)			
Before disinfection			
After disinfection			
After dechlorination			

FACILITY NAME AND PERMIT NUMBER:
Moores Creek Advanced Water Resource Recovery Facility: VA0025518

Form Approved 1/14/99
OMB Number 2040-0086

	Test number:_____	Test number:_____	Test number:_____
e. Describe the point in the treatment process at which the sample was collected.			
Sample was collected:			
f. For each test, include whether the test was intended to assess chronic toxicity, acute toxicity, or both.			
Chronic toxicity			
Acute toxicity			
g. Provide the type of test performed.			
Static			
Static-renewal			
Flow-through			
h. Source of dilution water. If laboratory water, specify type; if receiving water, specify source.			
Laboratory water			
Receiving water			
i. Type of dilution water. It salt water, specify "natural" or type of artificial sea salts or brine used.			
Fresh water			
Salt water			
j. Give the percentage effluent used for all concentrations in the test series.			
k. Parameters measured during the test. (State whether parameter meets test method specifications)			
pH			
Salinity			
Temperature			
Ammonia			
Dissolved oxygen			
l. Test Results.			
Acute:			
Percent survival in 100% effluent	%	%	%
LC_{50}			
95% C.I.	%	%	%
Control percent survival	%	%	%
Other (describe)			

Chronic:			
NOEC	%	%	%
IC_{25}	%	%	%
Control percent survival	%	%	%
Other (describe)			
m. Quality Control/Quality Assurance.			
Is reference toxicant data available?			
Was reference toxicant test within acceptable bounds?			
What date was reference toxicant test run (MM/DD/YYYY)?			
Other (describe)			

E.3. Toxicity Reduction Evaluation. Is the treatment works involved in a Toxicity Reduction Evaluation?

____Yes____No If yes, describe: _____

E.4. Summary of Submitted Biomonitoring Test Information. If you have submitted biomonitoring test information, or information regarding the cause of toxicity, within the past four and one-half years, provide the dates the information was submitted to the permitting authority and a summary of the results.

Date submitted: 10/26/2015 (MM/DD/YYYY)

Summary of results: (see instructions)

Toxicity testing results are submitted annually. Samples taken for 2015 are submitted attached as well as with November 2015 E-DMR.

END OF PART E.
REFER TO THE APPLICATION OVERVIEW TO DETERMINE WHICH OTHER PARTS OF FORM 2A YOU MUST COMPLETE.

SUPPLEMENTAL APPLICATION INFORMATION

PART F. INDUSTRIAL USER DISCHARGES AND RCRA/CERCLA WASTES

All treatment works receiving discharges from significant industrial users or which receive RCRA, CERCLA, or other remedial wastes must complete Part F.

GENERAL INFORMATION:

F.1. Pretreatment Program. Does the treatment works have, or is it subject to, an approved pretreatment program?

✓ Yes ___ No

F.2. Number of Significant Industrial Users (SIUs) and Categorical Industrial Users (CIUs). Provide the number of each of the following types of industrial users that discharge to the treatment works.

a. Number of non-categorical SIUs. 0

b. Number of CIUs. 3?

SIGNIFICANT INDUSTRIAL USER INFORMATION:

Supply the following information for each SIU. If more than one SIU discharges to the treatment works, copy questions F.3 through F.8 and provide the information requested for each SIU.

F.3. Significant Industrial User Information. Provide the name and address of each SIU discharging to the treatment works. Submit additional pages as necessary.

Name: _____

Mailing Address: _____

_____

F.4. Industrial Processes. Describe all of the industrial processes that affect or contribute to the SIU's discharge.

_____

F.5. Principal Product(s) and Raw Material(s). Describe all of the principal processes and raw materials that affect or contribute to the SIU's discharge.

Principal product(s): _____

Raw material(s): _____

F.6. Flow Rate.

a. Process wastewater flow rate. Indicate the average daily volume of process wastewater discharged into the collection system in gallons per day (gpd) and whether the discharge is continuous or intermittent.

_____ gpd (_____continuous or _____intermittent)

b. Non-process wastewater flow rate. Indicate the average daily volume of non-process wastewater flow discharged into the collection system in gallons per day (gpd) and whether the discharge is continuous or intermittent.

_____ gpd (_____continuous or _____intermittent)

F.7. Pretreatment Standards. Indicate whether the SIU is subject to the following:

a. Local limits ____Yes ____No

b. Categorical pretreatment standards ____Yes ____No

If subject to categorical pretreatment standards, which category and subcategory?

_____

F.8. Problems at the Treatment Works Attributed to Waste Discharged by the SIU. Has the SIU caused or contributed to any problems (e.g., upsets, interference) at the treatment works in the past three years?

____Yes ✓ No If yes, describe each episode.

RCRA HAZARDOUS WASTE RECEIVED BY TRUCK, RAIL, OR DEDICATED PIPELINE:

F.9. RCRA Waste. Does the treatment works receive or has it in the past three years received RCRA hazardous waste by truck, rail, or dedicated pipe? ____Yes ✓ No (go to F.12.)

F.10. Waste Transport. Method by which RCRA waste is received (check all that apply):

_____Truck _____Rail _____Dedicated Pipe

F.11. Waste Description. Give EPA hazardous waste number and amount (volume or mass, specify units).

EPA Hazardous Waste Number	Amount	Units

CERCLA (SUPERFUND) WASTEWATER, RCRA REMEDIATION/CORRECTIVE ACTION WASTEWATER, AND OTHER REMEDIAL ACTIVITY WASTEWATER:

F.12. Remediation Waste. Does the treatment works currently (or has it been notified that it will) receive waste from remedial activities?

____Yes (complete F.13 through F.15.) ✓ No

Provide a list of sites and the requested information (F.13 - F.15.) for each current and future site.

F.13. Waste Origin. Describe the site and type of facility at which the CERCLA/RCRA/or other remedial waste originates (or is expected to originate in the next five years).

F.14. Pollutants. List the hazardous constituents that are received (or are expected to be received). Include data on volume and concentration, if known. (Attach additional sheets if necessary).

F.15. Waste Treatment.

a. Is this waste treated (or will it be treated) prior to entering the treatment works?

____Yes ____No

If yes, describe the treatment (provide information about the removal efficiency):

b. Is the discharge (or will the discharge be) continuous or intermittent?

____Continuous ____Intermittent If intermittent, describe discharge schedule.

END OF PART F.
REFER TO THE APPLICATION OVERVIEW TO DETERMINE WHICH OTHER PARTS OF FORM 2A YOU MUST COMPLETE

SUPPLEMENTAL APPLICATION INFORMATION

PART G. COMBINED SEWER SYSTEMS

If the treatment works has a combined sewer system, complete Part G.

G.1. System Map. Provide a map indicating the following: (may be included with Basic Application Information)

a. All CSO discharge points.

b. Sensitive use areas potentially affected by CSOs (e.g., beaches, drinking water supplies, shellfish beds, sensitive aquatic ecosystems, and outstanding natural resource waters).

c. Waters that support threatened and endangered species potentially affected by CSOs.

G.2. System Diagram. Provide a diagram, either in the map provided in G.1. or on a separate drawing, of the combined sewer collection system that includes the following information:

a. Locations of major sewer trunk lines, both combined and separate sanitary.

b. Locations of points where separate sanitary sewers feed into the combined sewer system.

c. Locations of in-line and off-line storage structures.

d. Locations of flow-regulating devices.

e. Locations of pump stations.

CSO OUTFALLS:

Complete questions G.3 through G.6 once for each CSO discharge point.

G.3. Description of Outfall.

a. Outfall number N/A

b. Location

_____
(City or town, if applicable) (Zip Code)

_____
(County) (State)

_____
(Latitude) (Longitude)

c. Distance from shore (if applicable) _____ft.

d. Depth below surface (if applicable) _____ft.

e. Which of the following were monitored during the last year for this CSO?

____Rainfall ____CSO pollutant concentrations ____CSO frequency

____CSO flow volume ____Receiving water quality

f. How many storm events were monitored during the last year? _____

G.4. CSO Events.

a. Give the number of CSO events in the last year.

_____ events (___ actual or ___ approx.)

b. Give the average duration per CSO event.

_____ hours (____ actual or ____ approx.)

c. Give the average volume per CSO event.

_____ million gallons (_____ actual or _____ approx.)

d. Give the minimum rainfall that caused a CSO event in the last year.

_____ inches of rainfall

G.5. Description of Receiving Waters.

a. Name of receiving water: _____

b. Name of watershed/river/stream system: _____

United States Soil Conservation Service 14-digit watershed code (if known): _____

c. Name of State Management/River Basin: _____

United States Geological Survey 8-digit hydrologic cataloging unit code (if known): _____

G.6. CSO Operations.

Describe any known water quality impacts on the receiving water caused by this CSO (e.g., permanent or intermittent beach closings, permanent or intermittent shell fish bed closings, fish kills, fish advisories, other recreational loss, or violation of any applicable State water quality standard).

_____

_____

END OF PART G.
REFER TO THE APPLICATION OVERVIEW TO DETERMINE WHICH OTHER PARTS OF FORM 2A YOU MUST COMPLETE.

RIVANNA
WATER & SEWER AUTHORITY

Moores Creek WWTP
Operations & Maintenance Manual
August 2012

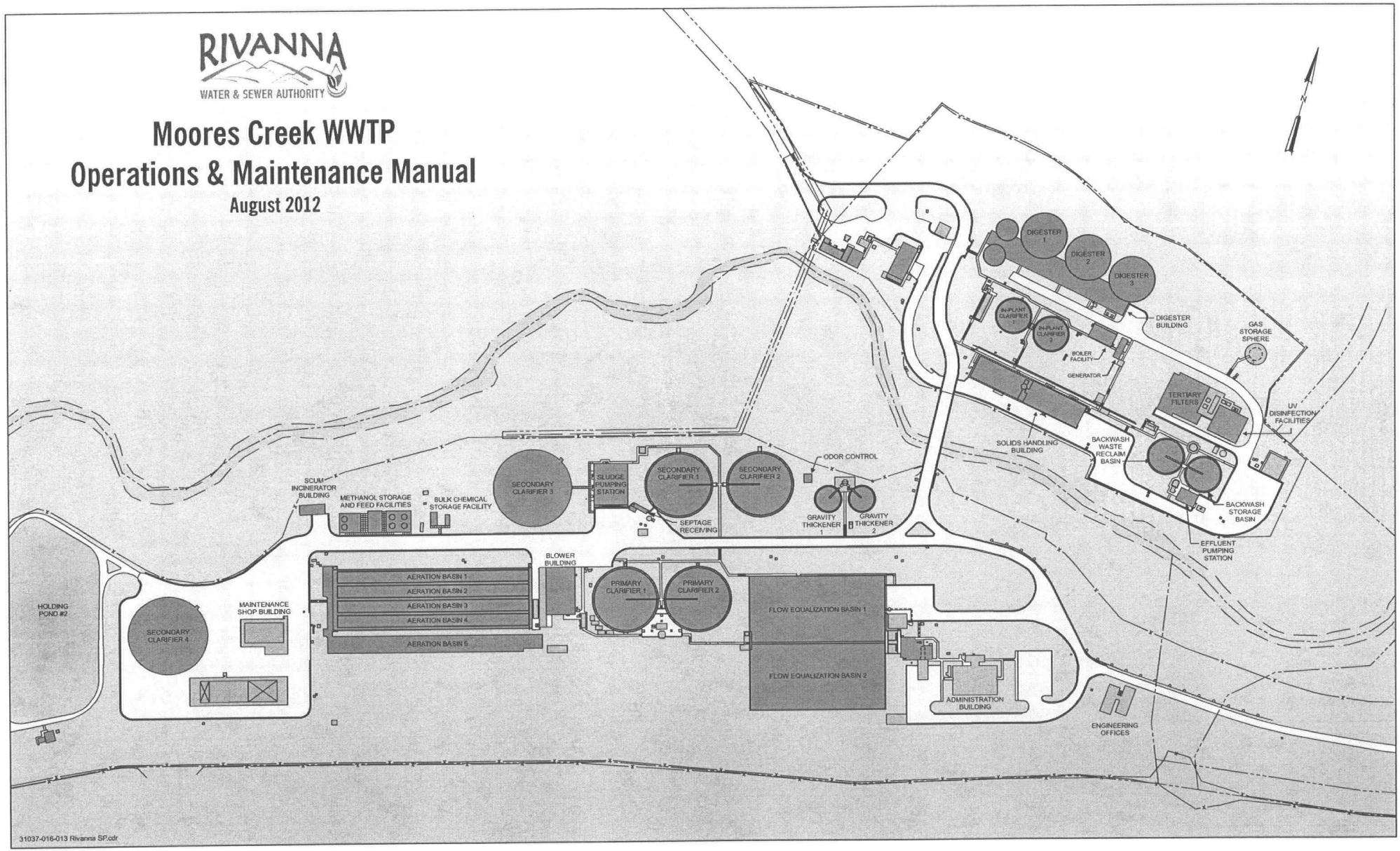

FIGURE 1-2

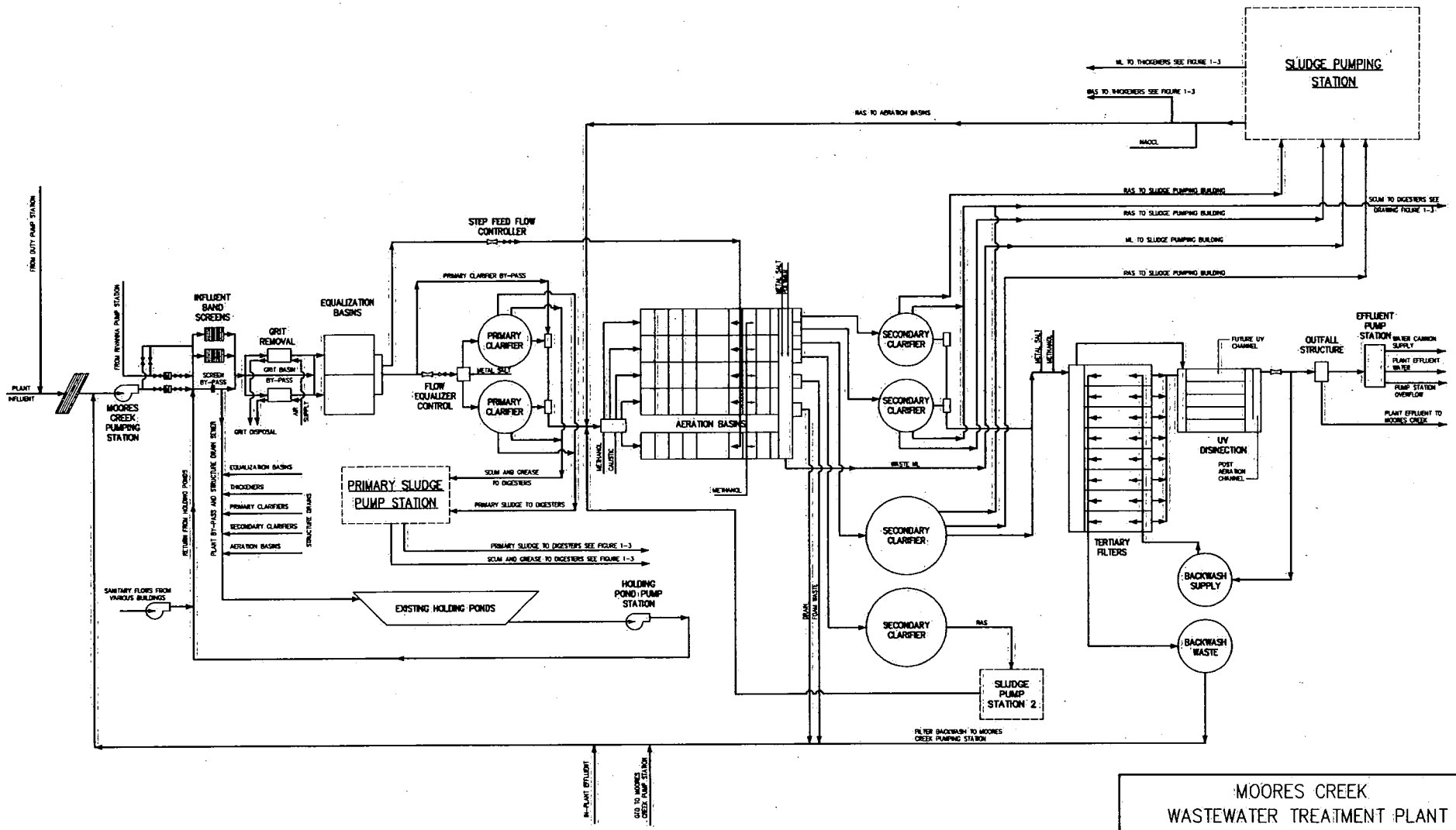

HAZEN AND SAWYER
Environmental Engineers & Scientists

MOORES CREEK
WASTEWATER TREATMENT PLANT

LIQUID PROCESS FLOW
DIAGRAM
FIGURE 1-2

20120411 1:47P O:\31037-RAL\31037-018\O&M\O&M Manual\Figures\Fig-1-2.dwg By: JBENEDICT Last Saved By: jbenedict

FIGURE 1-3

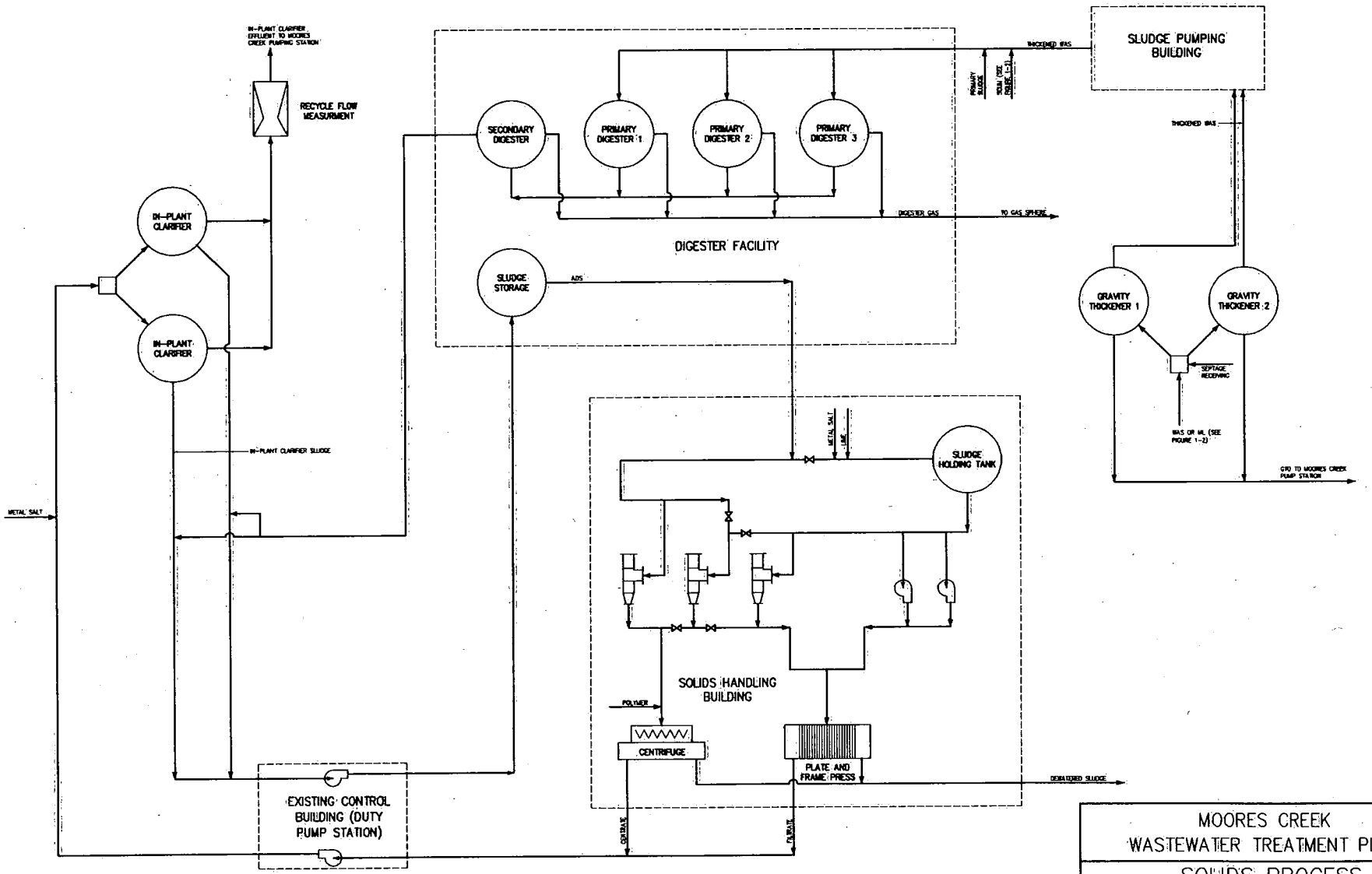

HAZEN AND SAWYER
Environmental Engineers & Scientists

MOORES CREEK
WASTEWATER TREATMENT PLANT

SOLIDS PROCESS
FLOW DIAGRAM
FIGURE 1-3

20120413_11:30A \\hazenandsawyer.com\hspprojects\31037-RAL\31037-016\O&M Manual\Manual\Figures\Fig-1-3.dwg By:HLONG Last Saved By: Hong

James R. Reed & Associates

Environmental Testing

770 Pilot House Drive • Newport News, Virginia 23606
(757) 873-4703 • Fax 873-1498 • www.jrreed.com

Memorandum

Date: September 24, 2015

To: Stuart Wilson, Rivanna Water and Sewer Authority

From: Lei Dong, James R. Reed & Associates

Subject: Toxicity Test for Outfall 001

Attached is a bioassay report for Outfall 001. The results of the toxicity tests passed the requirements of your permit for the following

Chronic *C.dubia* Toxicity Test:	**NOEC=100% effluent (TUc=1)**
Chronic *P.promelas* Toxicity Test:	**NOEC=100% effluent (TUc=1)**

If you have any questions and comments, please call me.

September 24, 2015

Rivanna Water and Sewer Authority
Moores Creek WWTP
Sample ID: Outfall 001
NPDES#: VA0025518
JRA ID: 15-12618

Chronic *Ceriodaphnia dubia* Toxicity Test
Chronic *Pimephales promelas* Toxicity Test

Performed for:
Rivanna Water and Sewer Authority
Stuart Wilson
695 Moores Creek Lane
Charlottesville, VA 22902

Performed by:

James R. Reed & Associates
770 Pilot House Dr.
Newport News, VA 23606

Respectfully,

Elaine Claiborne
Laboratory Director

Reproduction of this report is not permitted, except in full without written approval from James R. Reed & Associates.
The results of this report relate only to the sample(s) provided for analysis.
Results conform to NELAC standards, where applicable, unless otherwise indicated.

VELAP# 460013
EPA# VA00015

TEST SUMMARY SHEET
(For Marine and Freshwater Tests)
Test Method: EPA 1002.0

Facility: Moores Creek WWTP NPDES Permit #: VA0025518

Outfall/Receiving Stream: 001 JRA #: 15-12618

Test Period for Which Data is Being Submitted: Annual test
(i.e., first quarter, semiannual, or annual)

SUMMARY OF TEST CONDITIONS

	Date	Time
Test Start:	8/25/2015	1200
Test End:	9/1/2015	0920

Test Type (chronic/acute): Chronic

Test Organism: *Ceriodaphnia dubia* Age: <24 hours

Test Chamber Size: 30 mL

Volume of Test Solution per Chamber: 15 mL

Diluent: 20% DMW

Test Chamber Aeration Period	None
Test Photoperiod:	16hrs light / 8 hrs dark (50-100 ft-c)
Feeding regime:	0.1 mL *S.capricornutum* and 0.1mL YCT daily
S.capricornutum Batch #:	A0029
YCT Batch #:	Y0029

RANGE OF CHEMICAL PARAMETERS

Parameter		Effluent	Diluent
1. Chlorine (mg/L)	Initial	<0.02	<0.02
	Adjusted	N/A	
2. Salinity (ppt)	Initial	<1	N/A
	Adjusted	N/A	
3. pH	Initial	7.95-8.45	8.05-8.31
	Adjusted	N/A	

JRA #: 15-12618 Test Type&Organism: Chronic *Ceriodaphnia dubia*

RANGE OF CHEMICAL PARAMETERS (Continued):

Parameter	Effluent	Diluent
4. Alkalinity (mg/L as $CaCO_3$)	83-115	61-63
5. Ammonia (mg/L)	N/A	N/A
6. Hardness (mg/L as $CaCO_3$)	80-100	82
7. Conductivity (µmhos/cm)	502-585	175-184
8. DO (mg/L)	8.1-8.4	8.1-8.4

9. Methods Used for Adjustment of Test Solutions

Chlorine N/A
Salinity N/A
pH N/A

TEST RESULTS

1. Test Acceptability

Control Survival (%)	100%
Average Weight per Control Organism (mg)	n/a
Average Number of Young per Control (*C. dubia*)	23.3
60% of Control Females (*C. dubia*) with 3 Broods?	yes
Total Number of Male *C. dubia* in the Test	none
Known Parentage? N/A	
Percent Females Producing Eggs (*M. bahia*)	N/A

2. Method(s) of Statistical Analyses

Survival: Fisher's Exact Test
Reproduction: Steel's Many-One Rank Test
IC25: Linear Interpolation
LC50(at 48 hours): Visual observation

EFFLUENT USE SHEET
(CHRONIC RENEWALS)

Facility Moores Creek WWTP VPDES Permit # VA0025518
Outfall/Receiving Stream: 001 JRA: 15-12618

Test/Organism: Chronic *Ceriodaphnia dubia*

SAMPLE COLLECTION				SAMPLE USE		
Date(s)		Time(s)				
From:	To:	From:	To:	Date(s)	Time(s)	Test Day
8/23/2015	8/24/2015	0900	0900	8/25/2015	1200	0
				8/26/2015	1025	1
8/25/2015	8/26/2015	1000	1000	8/27/2015	1230	2
8/26/2015	8/27/2015	1030	1030	8/28/2015	1125	3
				8/29/2015	1125	4
				8/30/2015	1105	5
				8/31/2015	1105	6

The first use of a sample must be within 36-hours of retrieval from the sample collection device.
Last use of sample must be within 72 hours of first use.

JRA #: 15-12618 Test Type&Organism: Chronic *Ceriodaphnia dubia*

TEST RESULTS (Continued)

3. Statistical Results (as appropriate)

LC50 (at 48 hours):				
TUa		>100%		
IC25		<1		
Survival		>100%		
	(NOEC)	100%	(LOEC)	>100%
Normal Distribution (yes/no)		n/a		
Homogeneous Variance (yes/no)		n/a		
Reproduction				
	(NOEC)	100%	(LOEC)	>100%
Normal Distribution (yes/no)		no		
Homogeneous Variance (yes/no)		no		
TUc		1		
PMSD		13.2%		
Reference Toxicant Test Date		8/3/2015		
ID No.		T00594		
Result (mg/L)		0.00063		
QC Range (mg/L)		0.00315	thru	0.00063

4. Equipment

	(Make	Model)	Serial #	Probe #)
pH meter	VWR	SB21	00005173	F4
DO meter	YSI	5000	97J0177	N
SCT meter	Orion	3 Star	000642	A1
Temperature	VWR	digi-thermo	130538549	N/A
Chlorine	HACH	Colorimeter™II	00000994	N/A

5. Protocol Deviations/Comments

JRA #: 15-12618 Test Type&Organism: Chronic *Pimephales promelas*

RANGE OF CHEMICAL PARAMETERS (Continued):

Parameter	Effluent	Diluent
4. Alkalinity (mg/L as $CaCO_3$)	83-115	61-63
5. Ammonia (mg/L)	N/A	N/A
6. Hardness (mg/L as $CaCO_3$)	80-100	82
7. Conductivity (µmhos/cm)	502-585	175-184
8. DO (mg/L)	6.1-8.3	6.0-8.3

9. Methods Used for Adjustment of Test Solutions

Chlorine N/A
Salinity N/A
pH N/A

TEST RESULTS

1. Test Acceptability

Control Survival (%)	92.5%
Average Weight per Control Organism (mg)	0.968
Average Number of Young per Control (*C. dubia*)	N/A
60% of Control Females (*C. dubia*) with 3 Broods?	N/A
Total Number of Male *C. dubia* in the Test	N/A
Known Parentage? N/A	
Percent Females Producing Eggs (*M. bahia*)	N/A

2. Method(s) of Statistical Analyses

Survival: Steel's Many-One Rank Test
Growth: Dunnett's Test
LC50 (at 48 hours): Visual observation
IC25: Linear Interpolation

TEST SUMMARY SHEET
(For Marine and Freshwater Tests)
Test Method: EPA 1000.0

Facility: Moores Creek WWTP NPDES Permit #: VA0025518

Outfall/Receiving Stream: 001 JRA #: 15-12618

Test Period for Which Data is Being Submitted: Annual test
(i.e., first quarter, semiannual, or annual)

SUMMARY OF TEST CONDITIONS

	Date	Time
Test Start:	8/25/2015	1130
Test End:	9/1/2015	1120

Test Type (chronic/acute): Chronic

Test Organism: *Pimephales promelas* Age: 24-48 hours

Test Chamber Size: 500mL

Volume of Test Solution per Chamber: 250mL

Diluent: 20% DMW

Test Chamber Aeration Period: None
Test Photoperiod: 16 hrs light / 8 hrs dark(50-100 ft-c)
Feeding regime: 0.15 ml. concentrated rinsed *Artemia* nauplii (<24-hr old) per replicate twice daily
Artemia Batch #: BS43963

RANGE OF CHEMICAL PARAMETERS

Parameter		Effluent	Diluent
1. Chlorine (mg/L)	Initial	<0.02	<0.02
	Adjusted	N/A	
2. Salinity (ppt)	Initial	<1	N/A
	Adjusted	N/A	
3. pH	Initial	7.71-8.31	7.51-8.31
	Adjusted	N/A	

EFFLUENT USE SHEET
(CHRONIC RENEWALS)

Facility Moores Creek WWTP VPDES Permit # VA0025518
Outfall/Receiving Stream: 001 JRA#: 15-12618

Test/Organism: Chronic *Pimephales prometas*

SAMPLE COLLECTION				SAMPLE USE		
Date(s)		Time(s)				
From:	To:	From:	To:	Date(s)	Time(s)	Test Day
8/23/2015	8/24/2015	0900	0900	8/25/2015	1130	0
				8/26/2015	1200	1
8/25/2015	8/26/2015	1000	1000	8/27/2015	1245	2
8/26/2015	8/27/2015	1030	1030	8/28/2015	1120	3
				8/29/2015	1315	4
				8/30/2015	1310	5
				8/31/2015	1010	6

The first use of a sample must be within 36-hours of retrieval from the sample collection device.
Last use of sample must be within 72 hours of the first use.

JRA #: 15-12618 Test Type&Organism: Chronic *Pimephales promelas*

TEST RESULTS (Continued)

3. Statistical Results (as appropriate)

LC50 (at 48 hours):				
TUa		>100%		
IC25		<1		
Survival		>100%		
	(NOEC)	100%	(LOEC)	>100%
Normal Distribution (yes/no)		no		
Homogeneous Variance (yes/no)		n/a		
Growth				
	(NOEC)	100%	(LOEC)	>100%
Normal Distribution (yes/no)		yes		
Homogeneous Variance (yes/no)		yes		
TUc		1		
PMSD		16.2%		
Reference Toxicant Test Date		8/25/2015		
ID No.		T00601		
Result (mg/L)		0.02		
QC Range (mg/L)		0.01	thru	0.04

4. Equipment

	(Make	Model)	Serial #	Probe #)
pH meter	VWR	SB21	00005173	F4
DO meter	YSI	5000	97J0177	N
SCT meter	Orion	3 Star	000642	A1
Temperature	VWR	digi-thermo	130538549	N/A
Chlorine	HACH	Colorimeter™II	00000994	N/A

5. Protocol Deviations/Comments

Chronic *Ceriodaphnia dubia* Survival and Reproduction Test JRA# 15-12618

REED & ASSOCIATES

OBSERVATIONS

NPDES#: VA0025518 CLIENT: Rivanna WSA OUTFALL: 001
START DATE: 8/25/15 TIME: 1200 INIT: [illegible] END DATE: 9/1/15 TIME: 0920

NUMBER OF YOUNG PRODUCED PER DAY

CONC	REP	DAY 1	DAY 2	DAY 3	DAY 4	DAY 5	DAY 6	DAY 7	DAY 8	TOTAL
CONTROL	1	0	0	0	5	0	10	9		24
	2				4	8	0	10		22
	3				4	9		11		24
	4				5	9		10		24
Mean young per	5				4	5		12		21
	6				4	8		9		21
23.3	7				4	10		11		25
	8				4	0	10	12		26
100 Survival: %	9				4	9	5	11		24
	10				4	8		10		22
DATE 2015		8/26	8/27	8/28	8/29	8/30	8/31	9/1/15		
TIME		1025	1220	1125	1125	1105	1105	0920		
INIT		[illegible]	[illegible]	[illegible]	[illegible]	[illegible]	[illegible]	[illegible]		

NUMBER OF YOUNG PRODUCED PER DAY

CONC	REP	DAY 1	DAY 2	DAY 3	DAY 4	DAY 5	DAY 6	DAY 7	DAY 8	TOTAL
6.25%	1	0	0	0	4	9	0	12		25
	2				5	10		13		28
	3				4	10		11		25
	4				4	11		11		26
Mean young per	5				5	10		13		28
	6				5	9		13		27
26.4	7				6	12		12		30
	8				3	0	12	12		27
100 Survival: %	9				3	10	0	11		24
	10				4	8		12		24

(Indicate comments with an * and document on General Comments page)
X = adult dead, # = # live young, (#) = # dead young

Rev 1/08

CUMULATIVE DATA SUMMARY

Rivanna Water and Sewer Authority
Moores Creek WWTP
NPDES: VA0025518

Outfall 001

Date of Test	Invertebrate LC50 %	Vertebrate LC50 %	Invertebrate NOEC %		Vertebrate NOEC %	
9/13/2011			100%	TUc=1	100%	TUc=1
9/18/2012			100%	TUc=1	100%	TUc=1
9/10/2013			100%	TUc=1	100%	TUc=1
9/16/2014			100%	TUc=1	100%	TUc=1
8/25/2015			100%	TUc=1	100%	TUc=1

Chronic *Ceriodaphnia dubia* Survival and Reproduction Test JRA# 15-12618

REED & ASSOCIATES

OBSERVATIONS (cont.)

NPDES#: VA0025518 CLIENT: Rivanna WSA OUTFALL: 001

NUMBER OF YOUNG PRODUCED PER DAY											
CONC	REP	DAY 1	DAY 2	DAY 3	DAY 4	DAY 5	DAY 6	DAY 7	DAY 8	TOTAL	
50%	1	0	0	17	4	11	0	12		27	
	2				5	13		16		34	
	3				5	15		13		33	
	4				4	11		11		26	
Mean young per	5				4	11		11		26	
	6				5	12		13		30	
28.7	7				6	12		11		29	
	8				4	0	11	15		30	
100	9				4	8	0	12		24	
Survival: %	10				5	12		11		28	

NUMBER OF YOUNG PRODUCED PER DAY											
CONC	REP	DAY 1	DAY 2	DAY 3	DAY 4	DAY 5	DAY 6	DAY 7	DAY 8	TOTAL	
100%	1	0	0	0	5	10	0	16		31	
	2				4	12		12		28	
	3				4	11		12		27	
	4				4	12		12		28	
Mean young per	5				5	14		14		33	
	6				5	12		10		27	
28.5	7				6	13		14		33	
	8				3	0	10	13		26	
100	9				4	7	0	14		25	
Survival: %	10				4	9		14		27	

(Indicate comments with an * and document on General Comments page)
X = adult dead, # = # live young, (#) = # dead young

Rev. 1/08

Chronic *Ceriodaphnia dubia* Survival and Reproduction Test

JRA# 15-12618

REED & ASSOCIATES

OBSERVATIONS (cont.)

NPDES#: VA0025518 CLIENT: Rivanna WSA OUTFALL: 001

CONC	REP	NUMBER OF YOUNG PRODUCED PER DAY									
		DAY 1	DAY 2	DAY 3	DAY 4	DAY 5	DAY 6	DAY 7	DAY 8	TOTAL	
12.5%	1	0	0	0	5	12	0	12		29	
	2				4	10		10		24	
	3				4	11		10		25	
	4				4	12		12		28	
Mean young per	5				6	10		11		27	
	6				6	11		11		28	
26.1	7				5	9		10		24	
100	8				4	0	10	12		26	
Survival: %	9				5	9	0	11		25	
	10				4	8		13		25	

CONC	REP	NUMBER OF YOUNG PRODUCED PER DAY									
		DAY 1	DAY 2	DAY 3	DAY 4	DAY 5	DAY 6	DAY 7	DAY 8	TOTAL	
25%	1	0	0	0	4	10	0	12		26	
	2				4	9		12		25	
	3				5	12		14		31	
	4				4	11		14		29	
Mean young per	5				4	10		14		28	
	6				5	11		14		30	
25.7	7				6	11		10		27	
90	8				3	0	8	12		23	
Survival: %	9				5	8x				13x	
	10				4	9	0	12		25	

(Indicate comments with an * and document on General Comments page)
X = adult dead, # = # live young, (#) = # dead young

REED & ASSOCIATES
JRA#
15-12618

RANDOMIZATION TEMPLATE #1

NPDES# VA0025518 CLIENT: Rivanna WSA OUTFALL: 001

Concentration	Rep	Position #	Concentration	Rep	Position #
Control	1	5	25%	1	2
	2	9		2	8
	3	16		3	18
	4	20		4	23
	5	25		5	30
	6	32		6	34
	7	37		7	41
	8	44		8	48
	9	53		9	54
	10	58		10	60
6.25 %	1	1	50 %	1	3
	2	7		2	11
	3	15		3	13
	4	19		4	24
	5	28		5	29
	6	36		6	31
	7	42		7	38
	8	45		8	46
	9	50		9	51
	10	56		10	59
12.5%	1	4	100 %	1	6
	2	12		2	10
	3	14		3	17
	4	22		4	21
	5	26		5	27
	6	35		6	33
	7	39		7	40
	8	43		8	47
	9	49		9	52
	10	55		10	57

Chronic *Ceriodaphnia dubia* Survival and Reproduction Test JRA# 15-12618

REED & ASSOCIATES

GENERAL COMMENTS

NPDES#: VA0025518 CLIENT: Rivanna WSA OUTFALL: 001

TREATMENT PREPARATIONS CALCULATIONS					VERIFICATION OF:	VERIFIED BY:	ANALYST SIGNATURES	INITIALS
CONC (%)	TOTAL VOLUME (mL)	STOCK CONC (%)	AMOUNT STOCK (mL)	AMOUNT DILUENT (mL)	TREATMENT PREPARATION CALCULATIONS	[illegible]	[illegible]	[illegible]
Control	1200	~~N/A~~ 100% 5/12/15	0	1200	NUMBER OF ORGANISMS	[illegible]		
6.25%	1200	100%	75	1125	REPRODUCTION CALCULATIONS	[illegible]		
12.5%	1200	100%	150	1050	STATISTICAL ANALYSES	[illegible]		
25%	1200	100%	300	900			[illegible]	[illegible]
50%	1200	100%	600	600				
100%	1200	100%	1200	0				
CALCULATIONS PERFORMED BY:								

TEST CHAMBER SIZE: 30mL TYPE: polypropylene VOLUME OF TEST SOLUTION: 15mL

	1	2	3	4	5	6	7	8	9	10
SISTERS FROM:	Y14A	Y14B	Y14C	Y14D	Y14E	Y14F	Y14G	SFW Y20	SFW Y22	SFW Y27
PLACED IN REP	1	2	3	4	5	6	7	8	9	10
AGE OF ORGANISMS hrs - Collected Date 8/25/15 From (time) 0600 0900									A0029 Y0029	

COMMENTS:

Rev 1/08

Chronic *Ceriodaphnia dubia* Survival and Reproduction Test JRA# 15 - 12618

REED & ASSOCIATES

PHYSICAL/CHEMICAL DATA

NPDES#: VA0025518 CLIENT: Rivanna WSA OUTFALL: 001

CONC: CONTROL		DAY 0	DAY 1	DAY 2	DAY 3	DAY 4	DAY 5	DAY 6	DAY 7	DAY 8
TEMP	NEW	25.0	25.3	25.8	25.1	25.1	24.6	25.0	N/A	N/A
	END	N/A	25.6	25.2	24.9	25.0	25.0	25.8	25.1	
pH	NEW	8.24	8.24	8.31	8.26	8.25	8.28	8.23	N/A	N/A
	END	N/A	8.05	8.14	8.24	8.24	8.25	8.23	8.16	
DO	NEW	8.2	8.2	8.1	8.3	8.1	8.3	8.1	N/A	N/A
	END	N/A	8.2	8.3	8.3	8.3	8.4	8.3	8.3	
COND (µmhos/cm)		175	181	184	180	180	180	176	N/A	N/A
DATE		8/25/15	8/26/15	8/27/15	8/28/15	8/29/15	8/30/15	8/31/15	9/1/15	
INITIALS		KW	KW	KW	KW	KW	KW	KW	KW	

CONC: 6.25%		DAY 0	DAY 1	DAY 2	DAY 3	DAY 4	DAY 5	DAY 6	DAY 7	DAY 8
TEMP	NEW	25.0	24.1	24.1	24.1	24.2	24.1	24.1	N/A	N/A
	END	N/A	25.6	25.2	24.9	25.0	25.0	25.8	25.1	
pH	NEW	8.19	8.19	8.15	8.22	8.27	8.29	8.16	N/A	N/A
	END	N/A	8.12	8.32	8.25	8.26	8.29	8.32	8.15	
DO	NEW	8.3	8.3	8.3	8.3	8.3	8.3	8.3	N/A	N/A
	END	N/A	8.3	8.4	8.3	8.3	8.3	8.2	8.4	
COND (µmhos/cm)		195	194	204	201	201	201	200	N/A	N/A

CONC: 12.5%		DAY 0	DAY 1	DAY 2	DAY 3	DAY 4	DAY 5	DAY 6	DAY 7	DAY 8
TEMP	NEW	25.2	24.1	24.1	24.4	24.2	24.1	24.9	N/A	N/A
	END	N/A	25.6	25.2	24.9	25.0	25.0	25.8	25.1	
pH	NEW	8.19	8.20	8.16	8.11	8.28	8.30	8.23	N/A	N/A
	END	N/A	8.12	8.24	8.25	8.26	8.30	8.27	8.17	
DO	NEW	8.3	8.3	8.3	8.3	8.3	8.3	8.3	N/A	N/A
	END	N/A	8.3	8.3	8.3	8.3	8.3	8.2	8.2	
COND (µmhos/cm)		217	216	230	224	226	227	217	N/A	N/A

(Indicate comments with an * and document on General Comments page)

Rev. 1/08

Chronic *Ceriodaphnia dubia* Survival and Reproduction Test

JRA# 15-12618

WATER QUALITY

NPDES#: VA0025518 CLIENT: Rivanna WSA OUTFALL: 001

SAMPLE (PRIOR TO RENEWALS)

DATE	DAY	COLLECTION DATE/TIME	ARRIVAL DATE	TEMP (°C)	INIT pH	FINAL pH (6-9)	INIT DO (mg/L)	FINAL DO (mg/L)	COND (umhos)	INIT TRC (mg/L)	FINAL TRC (mg/L)	HARD (mg/L)	ALK (mg/L)
8/25/15	0	8/23/15 @ 0700 8/24/15 @ 0800	8/25/15	25.3	7.59	7.95	8.8	8.2	502	<0.02	–	80	83
8/26/15	1	"	"	25.2	7.46	8.10	9.1	8.3	507	<0.02	–	80	83
8/27/15	2	8/25/15 @ 1000 8/26/15 @ 1000	8/27/15	25.3	7.68	8.03	8.4	8.3	585	<0.02	–	100	94
8/28/15	3	8/26/15 @ 1030 8/27/15 @ 1030	8/28/15	24.1	7.01	8.16	9.0	8.3	564	<0.02	–	100	115
8/29/15	4	"	"	25.1	7.62	8.23	9.2	8.3	567	<0.02	–	100	115
8/30/15	5	"	"	25.3	7.58	8.31	9.3	8.3	565	<0.02	–	100	115
8/31/15	6	"	"	25.8	7.56	8.18	10.2	8.1	560	<0.02	–	100	115
	7												

DO Adjustments

Date	8/25/15	8/26/15	8/27/15	8/28/15	8/29/15	8/30/15	8/31/15
Method	Aerate	Aerate	Aerate	Aerate	Aerate	Aerate	Aerate
Minutes	10	15	10	15	15	15	15

DILUENT (20% DMW)

DATE	DAY	DATE MADE	TEMP (°C)	pH	DO (mg/L)	COND (umhos)	TRC (mg/L)	HARD (mg/L)	ALK (mg/L)
8/25/15	0	8/21/15	25.0	8.24	8.2	175	<0.02	82	63
8/26/15	1	8/24/15	25.3	8.24	8.2	181	<0.02	82	62
8/27/15	2	8/25/15	25.8	8.31	8.1	184	<0.02	82	61
8/28/15	3	8/26/15	25.1	8.26	8.3	180	<0.02	82	61
8/29/15	4	8/27/15	25.1	8.25	8.1	180	<0.02	82	63
8/30/15	5	8/27/15	24.6	8.28	8.3	180	<0.02	82	63
8/31/15	6	8/28/15	25.0	8.23	8.1	176	<0.02	82	62
	7								

Ceriodaphnia Survival and Reproduction Test-7 Day Survival

Start Date:	8/25/2015	Test ID:	15-12618CD	Sample ID:	VA0025518
End Date:	9/1/2015	Lab ID:	JRR	Sample Type:	EFF1-POTW
Sample Date:		Protocol:	EPA-821-R-02-013	Test Species:	CD-Ceriodaphnia dubia
Comments:					

Conc-%	1	2	3	4	5	6	7	8	9	10
CONTROL	1.0000	1.0000	1.0000	1.0000	1.0000	1.0000	1.0000	1.0000	1.0000	1.0000
6.25	1.0000	1.0000	1.0000	1.0000	1.0000	1.0000	1.0000	1.0000	1.0000	1.0000
12.5	1.0000	1.0000	1.0000	1.0000	1.0000	1.0000	1.0000	1.0000	1.0000	1.0000
25	1.0000	1.0000	1.0000	1.0000	1.0000	1.0000	1.0000	1.0000	0.0000	1.0000
50	1.0000	1.0000	1.0000	1.0000	1.0000	1.0000	1.0000	1.0000	1.0000	1.0000
100	1.0000	1.0000	1.0000	1.0000	1.0000	1.0000	1.0000	1.0000	1.0000	1.0000

Conc-%	Mean	N-Mean	Resp	Not Resp	Total	N	Fishor's Exact P	1-Tailed Critical
CONTROL	1.0000	1.0000	0	10	10	10		
6.25	1.0000	1.0000	0	10	10	10	1.0000	0.0500
12.5	1.0000	1.0000	0	10	10	10	1.0000	0.0500
25	0.9000	0.9000	1	9	10	10	0.5000	0.0500
50	1.0000	1.0000	0	10	10	10	1.0000	0.0500
100	1.0000	1.0000	0	10	10	10	1.0000	0.0500

Hypothesis Test (1-tail, 0.05)	NOEC	LOEC	ChV	TU
Fisher's Exact Test	100	>100		1
Treatments vs CONTROL				

Dose-Response Plot

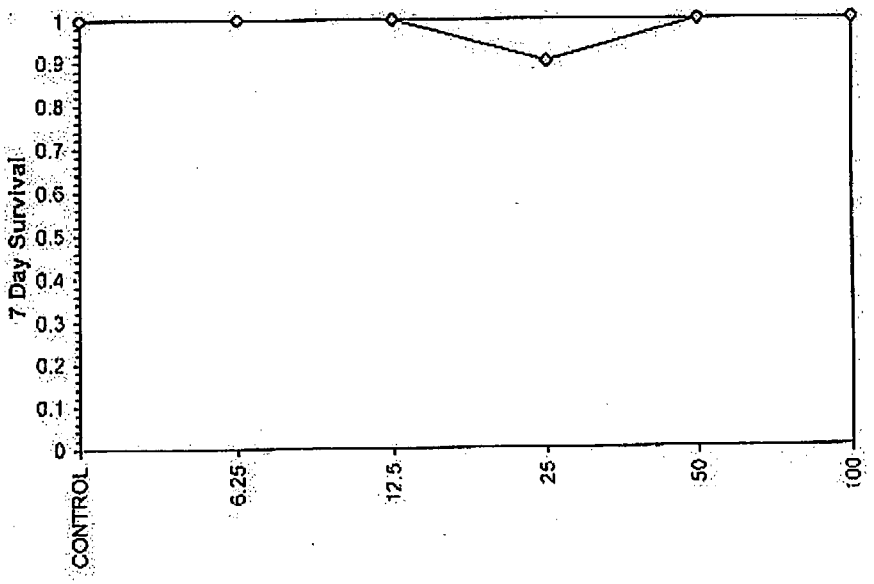

ToxCalc v5.0.32

Reviewed by: LD

Chronic *Ceriodaphnia dubia* Survival and Reproduction Test JRA# 15-1248

REED & ASSOCIATES

PHYSICAL/CHEMICAL DATA

NPDES#: VA0025518 CLIENT: Rivanna WSA OUTFALL: 001

CONC. 25%		DAY 0	DAY 1	DAY 2	DAY 3	DAY 4	DAY 5	DAY 6	DAY 7	DAY 8
TEMP	NEW	25.3	24.1	24.1	24.6	24.2	24.1	25.1	N/A	N/A
	END	N/A	25.6	25.2	24.9	25.0	25.0	25.8	25.1	
pH	NEW	8.17	8.20	8.16	8.24	8.28	8.31	8.22	N/A	N/A
	END	N/A	8.11	8.31	8.26	8.29	8.31	8.19	8.19	
DO	NEW	8.3	8.3	8.3	8.3	8.3	8.3	8.3	N/A	N/A
	END	N/A	8.3	8.3	8.3	8.3	8.2	8.2	8.2	
COND (µmhos/cm)		254	255	277	271	271	272	271	N/A	N/A
DATE		8/25/15	8/26/15	8/27/15	8/28/15	8/29/15	8/30/15	8/31/15	9/1/15	
INITIALS		[illegible]	[illegible]	[illegible]	[illegible]	[illegible]	[illegible]	[illegible]	[illegible]	

CONC. 50%		DAY 0	DAY 1	DAY 2	DAY 3	DAY 4	DAY 5	DAY 6	DAY 7	DAY 8
TEMP	NEW	25.4	24.1	24.1	24.6	24.1	24.1	25.1	N/A	N/A
	END	N/A	25.6	25.2	24.9	25.0	25.0	25.8	25.1	
pH	NEW	8.11	8.17	8.13	8.24	8.28	8.32	8.23	N/A	N/A
	END	N/A	8.12	8.30	8.28	8.34	8.37	8.31	8.27	
DO	NEW	8.3	8.3	8.3	8.3	8.3	8.3	8.3	N/A	N/A
	END	N/A	8.3	8.3	8.3	8.3	8.2	8.2	8.2	
COND (µmhos/cm)		337	337	326	364	365	368	364	N/A	N/A

CONC. 100%		DAY 0	DAY 1	DAY 2	DAY 3	DAY 4	DAY 5	DAY 6	DAY 7	DAY 8
TEMP	NEW	25.3	25.2	25.3	24.5	25.1	25.3	25.8	N/A	N/A
	END	N/A	25.6	25.2	24.9	25.0	25.0	25.8	25.1	
pH	NEW	7.95	8.10	8.03	8.14	8.23	8.32	8.18	N/A	N/A
	END	N/A	8.21	8.35	8.33	8.41	8.45	8.43	8.36	
DO	NEW	8.2	8.3	8.3	8.3	8.3	8.3	8.3	N/A	N/A
	END	N/A	8.3	8.3	8.3	8.3	8.2	8.2	8.1	
COND (µmhos/cm)		502	507	585	564	567	565	560	N/A	N/A

(Indicate comments with an * and document on General Comments page)

Rev. 1/08

Ceriodaphnia Survival and Reproduction Test-Reproduction

Start Date:	8/25/2015	Test ID:	15-12618CD	Sample ID:	VA0025518
End Date:	9/1/2015	Lab ID:	JRR	Sample Type:	EFF1-POTW
Sample Date:		Protocol:	EPA-821-R-02-013	Test Species:	CD-Ceriodaphnia dubia
Comments:					

Conc-%	1	2	3	4	5	6	7	8	9	10
CONTROL	24.000	22.000	24.000	24.000	21.000	21.000	25.000	26.000	24.000	22.000
6.25	25.000	28.000	25.000	26.000	28.000	27.000	30.000	27.000	24.000	24.000
12.5	29.000	24.000	25.000	28.000	27.000	28.000	24.000	26.000	25.000	25.000
25	26.000	25.000	31.000	29.000	28.000	30.000	27.000	23.000	13.000	25.000
50	27.000	34.000	33.000	26.000	26.000	30.000	29.000	30.000	24.000	28.000
100	31.000	28.000	27.000	28.000	33.000	27.000	33.000	26.000	25.000	27.000

			Transform: Untransformed						1-Tailed	
Conc-%	Mean	N-Mean	Mean	Min	Max	CV%	N	t-Stat	Critical	MSD
CONTROL	23.300	1.0000	23.300	21.000	26.000	7.309	10			
6.25	26.400	1.1330	26.400	24.000	30.000	7.405	10	-2.310	2.287	3.068
12.5	26.100	1.1202	26.100	24.000	29.000	6.866	10	-2.087	2.287	3.068
25	25.700	1.1030	25.700	13.000	31.000	19.845	10	-1.789	2.287	3.068
50	28.700	1.2318	28.700	24.000	34.000	11.025	10	-4.025	2.287	3.068
100	28.500	1.2232	28.500	25.000	33.000	9.959	10	-3.875	2.287	3.068

Auxiliary Tests	Statistic	Critical	Skew	Kurt
Kolmogorov D Test indicates non-normal distribution (p <= 0.05)	0.96849	0.895	-1.1425	6.3197
Bartlett's Test indicates unequal variances (p = 4.61E-03)	16.9425	15.0863		

Hypothesis Test (1-tail, 0.05)	NOEC	LOEC	ChV	TU	MSDu	MSDp	MSB	MSE	F-Prob	df
Dunnett's Test Treatments vs CONTROL	100	>100		1	3.0682	0.13168	39.75	9.00185	0.00192	5, 54

Dose-Response Plot

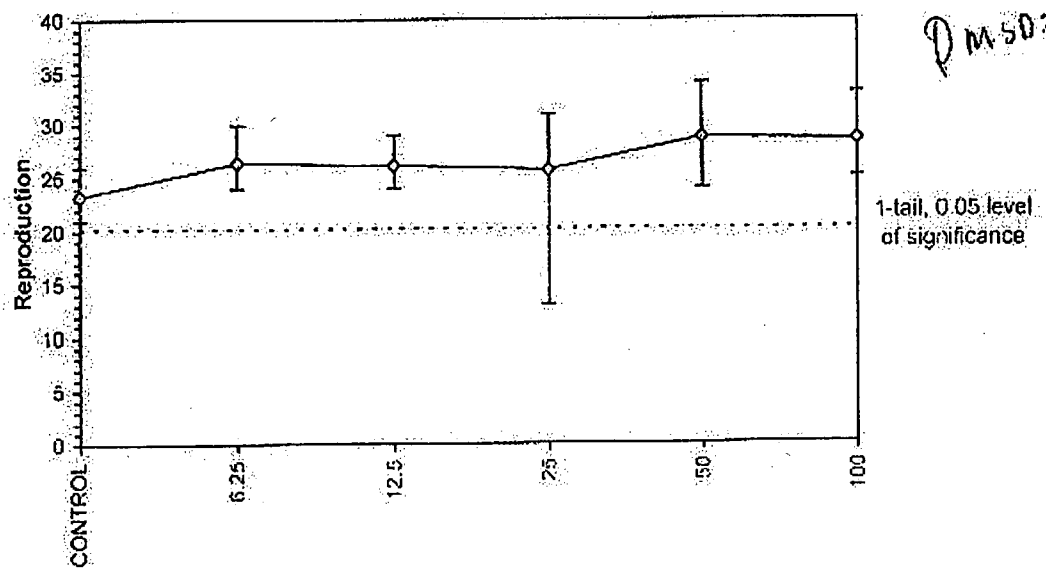

PMSD=13.2%

ToxCalc v5.0.32

Reviewed by: AD

Ceriodaphnia Survival and Reproduction Test-Reproduction

Start Date:	8/25/2015	Test ID:	15-12618CD	Sample ID:	VA0025518
End Date:	9/1/2015	Lab ID:	JRR	Sample Type:	EFF1-POTW
Sample Date:		Protocol:	EPA-821-R-02-013	Test Species:	CD-Ceriodaphnia dubia
Comments:					

Conc-%	1	2	3	4	5	6	7	8	9	10
CONTROL	24.000	22.000	24.000	24.000	21.000	21.000	25.000	26.000	24.000	22.000
6.25	25.000	28.000	25.000	26.000	28.000	27.000	30.000	27.000	24.000	24.000
12.5	29.000	24.000	25.000	28.000	27.000	28.000	24.000	26.000	25.000	25.000
25	26.000	25.000	31.000	29.000	28.000	30.000	27.000	23.000	13.000	25.000
50	27.000	34.000	33.000	26.000	26.000	30.000	29.000	30.000	24.000	28.000
100	31.000	28.000	27.000	28.000	33.000	27.000	33.000	26.000	25.000	27.000

			Transform: Untransformed					Rank	1-Tailed
Conc-%	Mean	N-Mean	Mean	Min	Max	CV%	N	Sum	Critical
CONTROL	23.300	1.0000	23.300	21.000	26.000	7.309	10		
6.25	26.400	1.1330	26.400	24.000	30.000	7.405	10	143.50	75.00
12.5	26.100	1.1202	26.100	24.000	29.000	6.866	10	142.00	75.00
25	25.700	1.1030	25.700	13.000	31.000	19.845	10	135.50	75.00
50	28.700	1.2318	28.700	24.000	34.000	11.025	10	160.00	75.00
100	28.500	1.2232	28.500	25.000	33.000	9.959	10	153.00	75.00

Auxiliary Tests	Statistic	Critical	Skew	Kurt
Kolmogorov D Test indicates non-normal distribution (p <= 0.05)	0.96849	0.895	-1.1425	5.3197
Bartlett's Test indicates unequal variances (p = 4.61E-03)	16.9425	15.0863		

Hypothesis Test (1-tail, 0.05)	NOEC	LOEC	ChV	TU
Steel's Many-One Rank Test	100	>100		1
Treatments vs CONTROL				

Dose-Response Plot

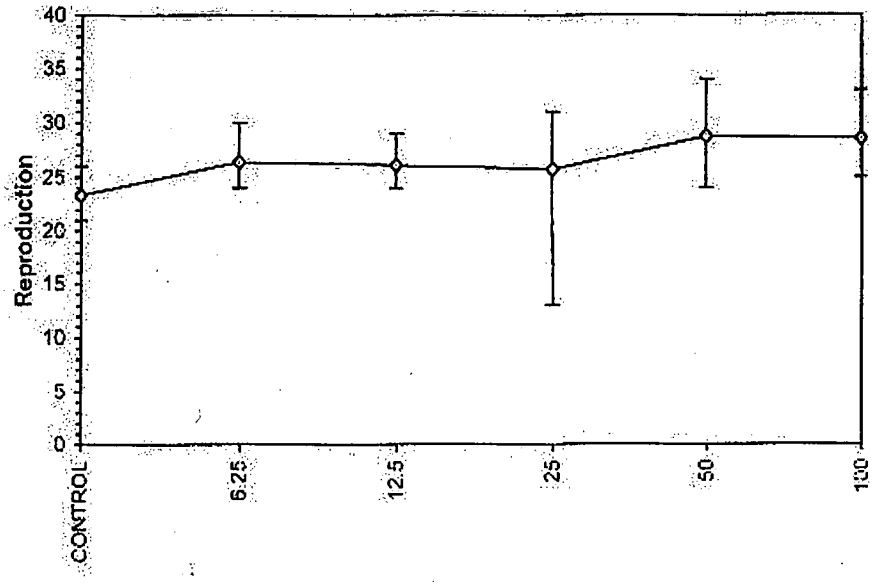

ToxCalc v5.0.32

Reviewed by: LD

Chronic *Pimephales promelas* Larval Survival and Growth Test JRA# 15-12618

REED & ASSOCIATES

OBSERVATIONS

NPDES#: VA0025518 CLIENT: Rivanna WSA OUTFALL: 001

ORGANISM SOURCE: Chesapeake Cultures JRA BATCH #: P1056 HATCH DATE: 8/23/15 @ 1300 - 1330

NUMBER SURVIVING/DAY									
CONC	REP	DAY 0	DAY 1	DAY 2	DAY 3	DAY 4	DAY 5	DAY 6	DAY 7
Control	A	10	10	10	9	9	9	9	9
	B	10	10	9	9	9	9	9	9
	C	10	10	10	10	10	10	10	10
X̄ surv 92.5 %	D	10	10	9	9	9	9	9	9
6.25%	A	10	~~9~~ 10	~~9~~ 10	~~9~~ 10	10	10	10	10
	B	10	10	10	10	10	10	10	10
	C	10	~~9~~ 10	~~9~~ 10	8/24/15 ~~9~~ 10	10	10	10	10
X̄ surv 100 %	D	10	10	10	10	10	10	10	10
12.5%	A	10	10	10	10	10	10	10	10
	B	10	10	~~10~~ 9	9	9	9	9	9
	C	10	10	~~9~~ 9	9	9	9	9	9
X̄ surv 95 %	D	10	10	~~9~~ 10	10	10	10	10	10
25%	A	10	10	10	10	10	10	10	10
	B	10	10	10	10	10	10	10	10
	C	10	10	10	10	10	10	10	10
X̄ surv 100 %	D	10	10	10	10	10	10	10	10
50%	A	10	10	10	10	10	10	10	10
	B	10	10	10	10	10	10	10	10
	C	10	10	10	10	10	10	10	10
X̄ surv 100 %	D	10	10	10	10	10	10	10	10
100%	A	10	10	10	10	10	10	10	10
	B	10	10	10	10	10	10	10	10
	C	10	10	10	10	10	10	10	10
X̄ surv 100 %	D	10	10	10	10	10	10	10	10
DATE 2015		8/25/15	8/26/15	8/27/15	8/28/15	8/29/15	8/30/15	8/31/15	9/1/15
TIME		1130	1200	1245	1120	1315	1310	1010	1120
INIT		LD	[illegible]	LD	LD	[illegible]	[illegible]	LD	LD

(Indicate comments with an * and document on General Comments page)

Rev. 10/19/00

Ceriodaphnia Survival and Reproduction Test-Reproduction

Start Date:	8/25/2015	Test ID:	15-12618CD	Sample ID:	VA0025518
End Date:	9/1/2015	Lab ID:	JRR	Sample Type:	EFF1-POTW
Sample Date:		Protocol:	EPA-821-R-02-013	Test Species:	CD-Ceriodaphnia dubia
Comments:					

Conc-%	1	2	3	4	5	6	7	8	9	10
CONTROL	24.000	22.000	24.000	24.000	21.000	21.000	25.000	26.000	24.000	22.000
6.25	25.000	28.000	25.000	28.000	28.000	27.000	30.000	27.000	24.000	24.000
12.5	29.000	24.000	25.000	28.000	27.000	28.000	24.000	26.000	25.000	25.000
25	26.000	25.000	31.000	29.000	28.000	30.000	27.000	23.000	13.000	25.000
50	27.000	34.000	33.000	26.000	26.000	30.000	29.000	30.000	24.000	28.000
100	31.000	28.000	27.000	28.000	33.000	27.000	33.000	26.000	25.000	27.000

			Transform: Untransformed					Isotonic	
Conc-%	Mean	N-Mean	Mean	Min	Max	CV%	N	Mean	N-Mean
CONTROL	23.300	1.0000	23.300	21.000	26.000	7.309	10	26.450	1.0000
6.25	26.400	1.1330	26.400	24.000	30.000	7.405	10	26.450	1.0000
12.5	26.100	1.1202	26.100	24.000	29.000	6.866	10	26.450	1.0000
25	25.700	1.1030	25.700	13.000	31.000	19.845	10	26.450	1.0000
50	28.700	1.2318	28.700	24.000	34.000	11.025	10	26.450	1.0000
100	28.500	1.2232	28.500	25.000	33.000	9.959	10	26.450	1.0000

Auxiliary Tests	Statistic	Critical	Skew	Kurt
Kolmogorov D Test indicates non-normal distribution (p <= 0.05)	0.96849	0.895	-1.1426	5.3197
Bartlett's Test indicates unequal variances (p = 4.61E-03)	16.9425	15.0863		

Linear Interpolation (200 Resamples)

Point	%	SD	95% CL	Skew
IC05	>100			
IC10	>100			
IC15	>100			
IC20	>100			
IC25	>100			
IC40	>100			
IC50	>100			

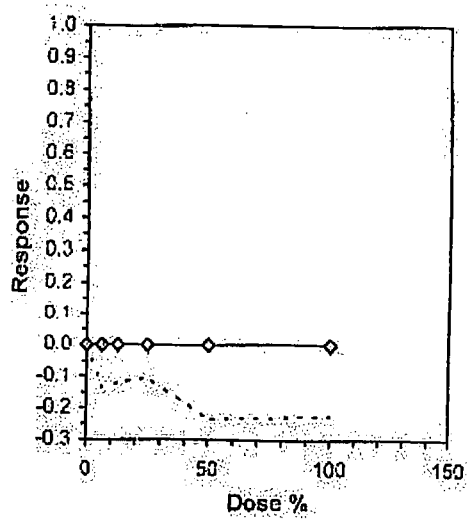

ToxCalc v5.0.32

Reviewed by: LD

Chronic *Pimephales promelas* Larval Survival and Growth Test JRA# 15-12618

REED & ASSOCIATES

PHYSICAL/CHEMICAL DATA

NPDES#: VA0025518 CLIENT: Rivanna WSA OUTFALL: OUTFALL: 001

CONC Control		DAY 0	DAY 1	DAY 2	DAY 3	DAY 4	DAY 5	DAY 6	DAY 7
TEMP (°C)	NEW	25.0	25.3	25.8	25.1	25.1	24.6	25.0	N/A
	END	N/A	25.6	25.2	24.9	25.0	25.0	25.8	25.1
pH	NEW	8.24	8.24	8.31	8.26	8.25	8.28	8.23	N/A
	END	N/A	7.66	7.73	7.74	7.70	7.51	7.53	7.69
DO (mg/L)	NEW	8.2	8.2	8.1	8.3	8.1	8.3	8.1	N/A
	END	N/A	7.6	7.8	7.8	7.6	6.0	6.1	7.0
COND (µmhos/cm)		175	181	184	180	180	180	176	N/A
DATE		8/25/15	8/26/15	8/27/15	8/28/15	8/29/15	8/30/15	8/31/15	9/1/15
INITIALS		[illegible]	[illegible]	[illegible]	[illegible]	[illegible]	[illegible]	[illegible]	[illegible]

CONC 6.25%		DAY 0	DAY 1	DAY 2	DAY 3	DAY 4	DAY 5	DAY 6	DAY 7
TEMP (°C)	NEW	25.0	24.1	24.1	24.1	24.2	24.1	24.1	N/A
	END	N/A	25.6	25.2	24.9	25.0	25.0	25.8	25.1
pH	NEW	8.19	8.19	8.15	8.22	8.27	8.29	8.16	N/A
	END	N/A	7.65	7.66	7.77	7.62	7.44	7.61	7.73
DO (mg/L)	NEW	8.3	8.3	8.3	8.3	8.3	8.3	8.3	N/A
	END	N/A	7.5	7.5	7.8	7.2	6.2	6.0	7.0
COND (µmhos/cm)		195	194	204	205	201	201	200	N/A

CONC 12.5%		DAY 0	DAY 1	DAY 2	DAY 3	DAY 4	DAY 5	DAY 6	DAY 7
TEMP (°C)	NEW	25.2	24.1	24.1	24.1	24.2	24.1	24.9	N/A
	END	N/A	25.6	25.2	24.9	25.0	25.0	25.8	25.1
pH	NEW	8.19	8.20	8.16	8.11	8.28	8.30	8.23	N/A
	END	N/A	7.77	7.67	7.51	7.54	7.51	7.49	7.75
DO (mg/L)	NEW	8.3	8.3	8.3	8.3	8.3	8.3	8.3	N/A
	END	N/A	7.6	7.5	7.8	6.9	6.1	6.0	6.8
COND (µmhos/cm)		217	216	230	224	226	227	219	N/A

(Indicate comments with an * and document on General Comments page)

Chronic *Pimephales promelas* Larval Survival and Growth Test JRA# 15 - 12618

WATER QUALITY

NPDES#: VA0025518 CLIENT: Rivanna WSA OUTFALL: 001

SAMPLE (PRIOR TO RENEWALS)

DATE	DAY	COLLECTION DATE/TIME	ARRIVAL DATE	TEMP (°C)	INIT pH	FINAL pH (6 - 9)	INIT DO (mg/L)	FINAL DO (mg/L)	COND (µmhos)	INIT TRC (mg/L)	FINAL TRC (mg/L)	HARD (mg/L)	ALK (mg/L)
8/25/15	0	8/23/15 @ 1000 8/24/15 @ 1600	8/25/15	25.3	7.59	7.95	8.8	8.2	502	<0.02	—	80	83
8/26/15	1	"	"	25.2	7.46	8.10	9.1	8.3	507	<0.02	—	80	83
8/27/15	2	8/25/15 @ 1000 8/26/15 @ 1300	8/27/15	24.3	7.68	8.03	8.9	8.3	585	<0.02	—	100	94
8/28/15	3	8/26/15 @ 1030 8/27/15 @ 1020	8/28/15	24.5	7.61	8.14	9.0	8.3	564	<0.02	—	100	115
8/29/15	4	"	"	25.1	7.63	8.23	9.2	8.3	567	<0.02	—	100	115
8/30/15	5	"	"	25.3	7.58	8.31	9.3	8.3	565	<0.02	—	100	115
8/31/15	6	"	"	25.0	7.46	8.18	10.2	8.1	560	<0.02		100	115

DO Adjustments

Date	8/25/15	8/26/15	8/27/15	8/28/15	8/29/15	8/30/15	8/31/15
Method	Aerate	Aerate	Aerate	Aerate	Aerate	Aerate	Aerate
Minutes	10	15	10	15	15	15	15

pH Adjustments

Date							
Method							
Amount							

TRC Adjustments

Date							
Method							
Amount							

DILUENT (DMW) Mod Hard SFW Other _____ (CIRCLE ONE

20%

DATE	DAY	DATE MADE	TEMP (°C)	pH	DO (mg/L)	COND (µmhos)	TRC (mg/L)	HARD (mg/L)	ALK (mg/L)
8/25/15	0	8/21/15	25.0	8.24	8.2	175	<0.02	82	63
8/26/15	1	8/24/15	25.3	8.24	8.2	181	<0.02	82	62
8/27/15	2	8/25/15	25.8	8.31	8.1	184	<0.02	82	61
8/28/15	3	8/25/15	25.1	8.26	8.3	180	<0.02	82	61
8/29/15	4	8/27/15	25.1	8.25	8.1	180	<0.02	82	63
8/30/15	5	8/27/15	24.6	8.28	8.3	180	<0.02	82	63
8/31/15	6	8/28/15	25.0	8.21	8.1	176	<0.02	82	62

Chronic *Pimephales promelas* Larval Survival and Growth Test JRA# 15 - 12618

REED & ASSOCIATES

GROWTH DATA

NPDES#: VA0025518 CLIENT: Rivanna WSA OUTFALL: 001

CONC	REP	FOIL #	FOIL WT (mg)	FOIL WT & ORG WT (mg)	WT OF ORGS (mg)	# ORGS (original)	MEAN WT/ORIGINAL # OF ORG (mg)
X̄ wgt of surviving	A	1C	5.189	14.755		10	
Controls:_____mg	B	2C	4.591	12.646		10	
Control	C	3C	5.559	15.331		10	
X̄ wgt _____mg	D	4C	5.417	13.840		10	
	A	5C	4.882	14.773		10	
6.25%	B	6C	4.870	12.550		10	
	C	7C	5.032	13.085		10	
X̄ wgt _____mg	D	8C	5.877	13.005		10	
	A	9C	5.603	14.362		10	
12.5%	B	10C	6.429	13.277		10	
	C	11C	5.061	13.576		10	
X̄ wgt _____mg	D	12C	5.509	13.691		10	
	A	13C	5.427	13.016		10	
25%	B	14C	4.501	13.377		10	
	C	15C	6.223	13.577		10	
X̄ wgt _____mg	D	16C	5.436	14.082		10	
	A	17C	5.908	15.141		10	
50%	B	18C	6.478	15.010		10	
	C	19C	6.688	15.320		10	
X̄ wgt _____mg	D	20C	5.766	15.256		10	
	A	21C	4.209	13.263		10	
100%	B	22C	6.850	16.181		10	
	C	23C	5.284	15.246		10	
X̄ wgt _____mg	D	24C	5.499	16.398		10	
	DATE		8/27/15	9/2/15			
	INITIALS		[illegible]	[illegible]			

Date/Time in oven 9/1/15 @ 1350 Analyst [illegible] Oven Temp°C 104 C

Date/Time out of oven 9/2/15 @ 0800 Analyst [illegible] Oven Temp°C 104 C

(Indicate comments with an * and document on General Comments page)

Rev. 10/07

Chronic *Pimephales promelas* Larval Survival and Growth Test JRA# 15 - 12618

REED & ASSOCIATES

PHYSICAL/CHEMICAL DATA

NPDES#: VA0025518 CLIENT: Rivanna WSA OUTFALL: 001

CONC: 25%		DAY 0	DAY 1	DAY 2	DAY 3	DAY 4	DAY 5	DAY 6	DAY 7
TEMP (°C)	NEW	25.3	24.1	24.1	24.6	24.2	24.1	25.1	N/A
	END	N/A	25.6	25.2	24.9	25.0	25.0	25.8	25.1
pH	NEW	8.17	8.20	8.16	8.24	8.28	8.31	8.22	N/A
	END	N/A	7.76	7.64	7.82	7.51	7.53	7.50	7.71
DO (mg/L)	NEW	8.3	8.3	8.3	8.3	8.3	8.3	8.3	N/A
	END	N/A	7.7	7.4	7.8	6.6	6.2	6.0	6.5
COND (µmhos/cm)		254	255	277	275	271	272	271	N/A
DATE		8/25/15	8/26/15	8/27/15	8/28/15	8/29/15	8/30/15	8/31/15	9/1/15
INITIALS		[illegible]	[illegible]	[illegible]	[illegible]	[illegible]	[illegible]	[illegible]	[illegible]

CONC: 50%		DAY 0	DAY 1	DAY 2	DAY 3	DAY 4	DAY 5	DAY 6	DAY 7
TEMP (°C)	NEW	25.4	24.1	24.1	24.6	24.1	24.1	25.1	N/A
	END	N/A	25.6	25.2	24.9	25.0	25.0	25.8	25.1
pH	NEW	8.11	8.17	8.13	8.24	8.28	8.32	8.23	N/A
	END	N/A	7.77	7.68	7.70	7.64	7.57	7.60	7.79
DO (mg/L)	NEW	8.3	8.3	8.3	8.3	8.3	8.3	8.3	N/A
	END	N/A	7.6	7.4	7.6	6.9	6.2	6.1	6.6
COND (µmhos/cm)		337	337	376	369	365	368	364	N/A

CONC: 100%		DAY 0	DAY 1	DAY 2	DAY 3	DAY 4	DAY 5	DAY 6	DAY 7
TEMP (°C)	NEW	25.3	25.2	25.3	24.5	25.1	25.3	25.8	N/A
	END	N/A	25.6	25.2	24.9	25.0	25.0	25.8	25.1
pH	NEW	7.95	8.10	8.03	8.14	8.23	8.31	8.18	N/A
	END	N/A	7.83	7.75	7.89	7.91	7.71	7.80	7.92
DO (mg/L)	NEW	8.2	8.3	8.3	8.3	8.3	8.3	8.1	N/A
	END	N/A	7.6	7.5	7.7	7.4	6.1	6.3	6.7
COND (µmhos/cm)		502	507	585	564	567	565	560	N/A

(Indicate comments with an * and document on General Comments page)

Rev. 10/19/00

Chronic *Pimephales promelas* Larval Survival and Growth Test JRA#: 15-12618

GENERAL COMMENTS

NPDES#: VA0025518 CLIENT: Rivanna WSA OUTFALL: 001

FEEDINGS	DAY 0	DAY 1	DAY 2	DAY 3	DAY 4	DAY 5	DAY 6
DATE/TIME		8/26/15 @ 0820	8/27/15 0845	8/28/15 @ 0820	8/29/15 @ 0815	8/30/15 @ 0815	8/31/15 @ 0850
INITIALS							
DATE/TIME	8/25/15 1445	8/26/15 1545	8/27/15 1525	8/28/15 @ 1930	8/29/15 @ 1530	8/30/15 @ 1575	8/31/15 1630
INITIALS							

Artemia Batch #: BS43963

TREATMENT PREPARATIONS CALCULATIONS							Verification of:	Verified by:	ANALYST SIGNATURES	INITIALS
Conc. (%) (circle one)	Total Volume (mL)	Stock Conc. (%)	Amount Stock (mL)	Amount Diluent (mL)	Hard (mg/L)	ALK (mg/L)	Treatment Preparation Calculations			
Control	1200	~~N/A~~ 100% 9/24/15	0	1200	80-100	80-115	Number of Organisms			
6.25%	1200	100%	75	1125			Statistical Analyses			
12.5%	1200	100%	150	1050			Statistical Analyses			
25%	1200	100%	300	900						
50%	1200	100%	600	600						
100%	1200	100%	1200	0	82	61-67				
Stock Solution										

TEST CHAMBER SIZE: 500mL TYPE: Polystyrene VOLUME OF TEST SOLUTION: 250mL

COMMENTS:

Rev 10/07

Chronic *P.promelas* Survival and Growth Test

NPDS# CLIENT: Rivanna WSA JRA: 15-12618

VA0025518 GROWTH DATA OUTFALL# 001

CONC.	REP	FOIL#	FOIL WT(mg)	FOIL WT&ORG WT(mg)	WT OF ORGS(mg)	#ORGS	MEAN		
	A	1C	5.189	14.755	9.566	10	0.957		
	B	2C	4.591	12.646	8.055	10	0.806		
Control	C	3C	5.559	15.331	9.772	10	0.977	Ave. wt of surviving	
	D	4C	5.417	13.840	8.423	10	0.842	Control:(mg)	0.968
	A	5C	4.882	14.773	9.891	10	0.989		
	B	6C	4.870	12.550	7.680	10	0.768		
6.25%	C	7C	5.032	13.085	8.053	10	0.805		
	D	8C	5.877	13.005	7.128	10	0.713		
								ave. wt :	0.895
	A	9C	5.603	14.362	8.759	10	0.876		
	B	10C	6.429	13.277	6.848	10	0.685		
12.5%	C	11C	5.061	13.576	8.515	10	0.852		
	D	12C	5.509	13.691	8.182	10	0.818		
								ave. wt :	0.819
	A	13C	5.427	13.016	7.589	10	0.759		
	B	14C	4.501	13.377	8.876	10	0.888		
25%	C	15C	6.223	13.577	7.354	10	0.735		
	D	16C	5.436	14.082	8.646	10	0.865		
								ave. wt :	0.808
	A	17C	5.908	15.141	9.233	10	0.923		
	B	18C	6.478	15.010	8.532	10	0.853		
50%	C	19C	6.688	15.32	8.632	10	0.863		
	D	20C	5.766	15.256	9.490	10	0.949		
								ave. wt :	0.812
	A	21C	4.209	13.263	9.054	10	0.905		
	B	22C	6.850	16.181	9.331	10	0.933		
100%	C	23C	5.284	15.246	9.962	10	0.996		
	D	24C	5.499	16.398	10.899	10	1.090		
								ave. wt :	0.897
	Date		8/27/2015	9/2/2015					
	Intials		KH	KH					

Date/Time in Oven: 9/1/15@1350 Analyst KH Oven Temp°C 104

Date/Time out of Oven: 9/2/15@0900 Analyst KH Oven Temp°C 104

Larval Fish Growth and Survival Test-7 Day Growth

Start Date:	8/25/2015	Test ID:	15-12618	Sample ID:	VA0025518
End Date:	9/1/2015	Lab ID:	JRR	Sample Type:	EFF1-POTW
Sample Date:		Protocol:	EPA-821-R-02-013	Test Species:	PP-Pimephales promelas
Comments:					

Conc-%	1	2	3	4
CONTROL	0.9566	0.8055	0.9772	0.8423
6.25	0.9891	0.7680	0.8053	0.7128
12.5	0.8759	0.6848	0.8515	0.8182
25	0.7589	0.8876	0.7354	0.8646
50	0.9233	0.8532	0.8632	0.9490
100	0.9054	0.9331	0.9962	1.0899

			Transform: Untransformed						1-Tailed	
Conc-%	Mean	N-Mean	Mean	Min	Max	CV%	N	t-Stat	Critical	MSD
CONTROL	0.8954	1.0000	0.8954	0.8055	0.9772	9.419	4			
6.25	0.8188	0.9145	0.8188	0.7128	0.9891	14.622	4	1.275	2.410	0.1447
12.5	0.8076	0.9019	0.8076	0.6848	0.8759	10.552	4	1.462	2.410	0.1447
25	0.8116	0.9064	0.8116	0.7354	0.8876	9.321	4	1.395	2.410	0.1447
50	0.8972	1.0020	0.8972	0.8532	0.9490	5.171	4	-0.030	2.410	0.1447
100	0.9812	1.0958	0.9812	0.9054	1.0899	8.343	4	-1.428	2.410	0.1447

Auxiliary Tests	Statistic	Critical	Skew	Kurt
Shapiro-Wilk's Test indicates normal distribution (p > 0.05)	0.9654	0.916	0.31776	-0.5427
Bartlett's Test indicates equal variances (p = 0.82)	2.21983	15.0863		

Hypothesis Test (1-tail, 0.05)	NOEC	LOEC	ChV	TU	MSDu	MSDp	MSB	MSE	F-Prob	df
Dunnett's Test	100	>100		1	0.14474	0.16165	0.01892	0.00721	0.05969	5, 18
Treatments vs CONTROL	✓	✓								

Dose-Response Plot

pMSD = 16.2%

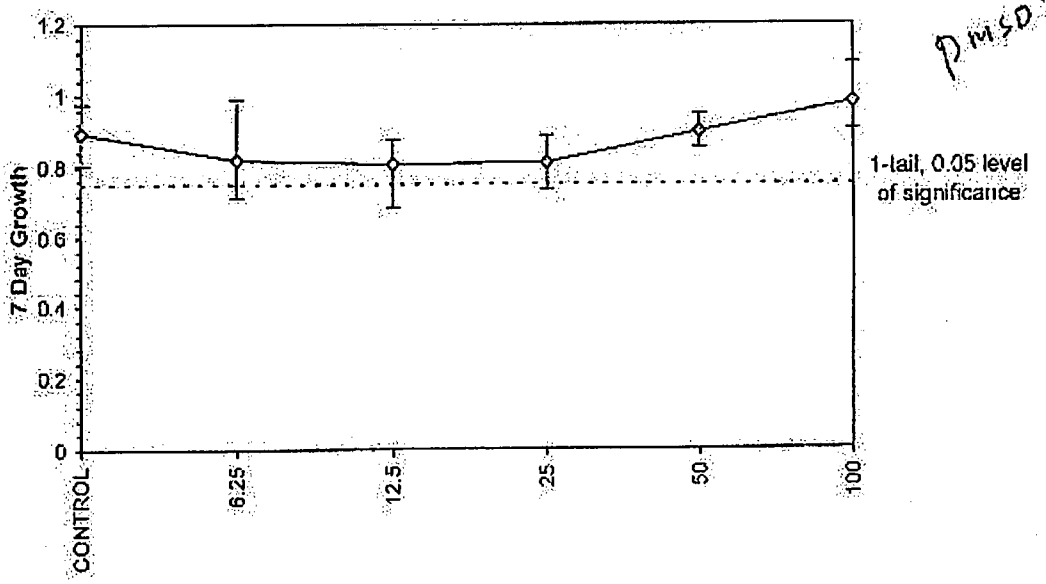

ToxCalc v5.0.32

Reviewed by: LJ

Larval Fish Growth and Survival Test-7 Day Survival

Start Date:	8/25/2015	Test ID:	15-12618	Sample ID:	VA0025518
End Date:	9/1/2015	Lab ID:	JRR	Sample Type:	EFF1-POTW
Sample Date:		Protocol:	EPA-821-R-02-013	Test Species:	PP-Pimephales promelas
Comments:					

Conc-%	1	2	3	4
CONTROL	0.9000	0.9000	1.0000	0.9000
6.25	1.0000	1.0000	1.0000	1.0000
12.5	1.0000	0.9000	0.9000	1.0000
25	1.0000	1.0000	1.0000	1.0000
50	1.0000	1.0000	1.0000	1.0000
100	1.0000	1.0000	1.0000	1.0000

			Transform: Arcsin Square Root					Rank	1-Tailed
Conc-%	Mean	N-Mean	Mean	Min	Max	CV%	N	Sum	Critical
CONTROL	0.9250	1.0000	1.2898	1.2490	1.4120	6.318	4		
6.25	1.0000	1.0811	1.4120	1.4120	1.4120	0.000	4	24.00	10.00
12.5	0.9500	1.0270	1.3305	1.2490	1.4120	7.072	4	20.00	10.00
25	1.0000	1.0811	1.4120	1.4120	1.4120	0.000	4	24.00	10.00
50	1.0000	1.0811	1.4120	1.4120	1.4120	0.000	4	24.00	10.00
100	1.0000	1.0811	1.4120	1.4120	1.4120	0.000	4	24.00	10.00

Auxiliary Tests	Statistic	Critical	Skew	Kurt
Shapiro-Wilk's Test indicates non-normal distribution (p <= 0.05)	0.77127	0.916	0.84747	2.20368
Equality of variance cannot be confirmed				

Hypothesis Test (1-tail, 0.05)	NOEC	LOEC	ChV	TU
Steel's Many-One Rank Test	100	>100		1
Treatments vs CONTROL	✓	✓		

Dose-Response Plot

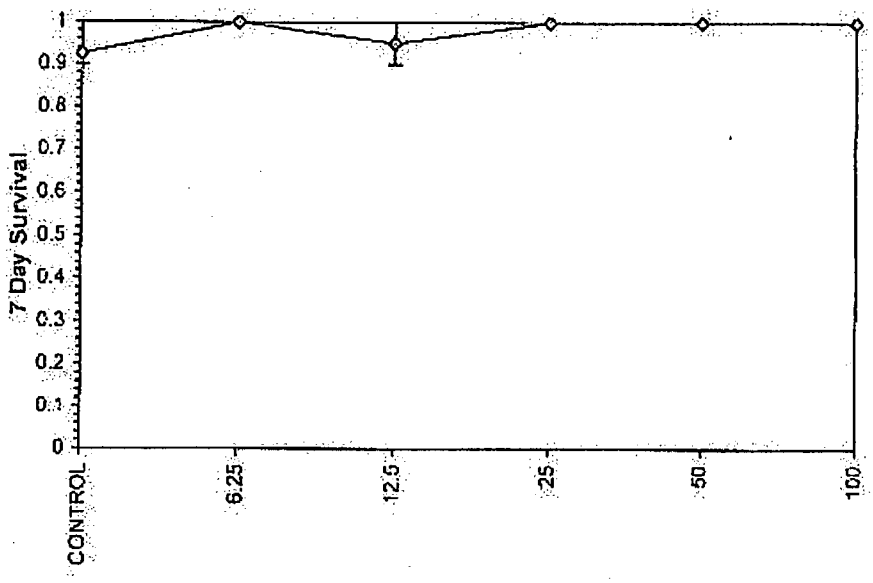

ToxCalc v5.0.32

Reviewed by: LJ

Toxicity Test Sample Chain of Custody

PLEASE COMPLETE ALL INFORMATION

Facility: Moores Creek WRRF
NPDES#: VA 0025518
Address: 695 Moores Creek LN Charlottesville VA 22902
County: Albemarle Pipe/Outfall/Location: Outfall 001
Flow Type (Circle One): (Continuous) Intermittent Batch Stormwater Other: _____
Instream Waste Conc 96%

Type of sample:

___ (Grab): Date _____ Time _____ Amount of Sample Collected _____

✓ (Time Composite): Collected from (Date/Time): 8/23/2015 0900
To (Date/Time): 8/24/2015 0900
Number/Volume of Subsamples: 96 Time Increment: 15 min Total Amount Collected: 4.4L

___ (Flow-Proportional Composite:): Collected from (Date/Time): _____
To (Date/Time): _____
Set Volume Subsample/Volume Flow: _____ Total Amount Collected: _____

For variable volume subsamples based on flow/set time increments --Attach sample and flow information.

Sample collected by: (print) Patricia DeFibaugh Affiliation: RWSA
(sign) [signature]

*Temperature of sample in sample collection device 30 °C
*Final temperature of effluent at sample collection point 22.9
*Is sample collection device chilled? Yes Is sample packed on ice for shipment? Yes
*It is required that all samples remain at 0-6°C during collection period and shipment for data to be accepted by the appropriate Regulatory Agency (Do not freeze!)

Is the sample chlorinated? NO dechlorinated? NA If so, how? _____
Permit with interim chlorine limit? NO If yes- limit (mg/L) _____
Field pH 6.95 Field Total Residual Chlorine 0 Time: _____ Grab time: 0910
Name of Analyst: Patricia DeFibaugh Affiliation: RWSA
Comments/Sample description Final Effluent
Method of Shipment: Fed Ex
Shipment Date / Time: 8-24-2015 / 1600
Type of test(s) to be performed: toxicity
(Specify organisms): C. dubia P. promelas

PRINT & SIGN NAMES

Relinquished by: (Print) Patricia DeFibaugh /Sign [signature] Date/Time 8/24/2015 / 1600
Received by: (Print) _____ /Sign _____ Date/Time _____

Relinquished by: (Print) Fedex /Sign _____ Date/Time _____
Received by: (Print) Mendy hall /Sign: Mendy hall Date/Time 8-25-15 0925

Relinquished by: (Print) _____ /Sign _____ Date/Time _____
Received by: (Print) _____ /Sign _____ Date/Time _____

EFFLUENT CONDITION UPON ARRIVAL AT LABORATORY

JRA #: 15-12618-A Arrival Temperature: 1.2 °C Date: 8-25-15 Time: 0925 Ice Present: (Yes) No
Sample Volume: 2.5 Gal Color: Light brown Odor: Some Solids: None pH: 7.54 DO (mg/L): 8.8
Conductivity (µmhos/cm) 502 @ 25.3 °C Salinity (ppt): <1 TRC (mg/L): <0.02
Method (For TRC): HACH 8167 Analyst: [illegible]

Toxicity Test Sample Chain of Custody

PLEASE COMPLETE ALL INFORMATION

Facility: Moores Creek WRF
NPDES#: VA 0025518
Address: 695 Moores Creek Lane Charlottesville VA 22902
County: Albemarle Pipe/Outfall/Location: Outfall 001
Flow Type (Circle One) Continuous Intermittent Batch Stormwater Other:
Instream Waste Conc: 96.90
Type of sample:
(Grab): Date: Time: Amount of Sample Collected:
✓ (Time Composite): Collected from (Date/Time): 8/26/2015 1030
To (Date/Time): 8/27/2015 1030
Number/Volume of Subsamples: 96/150 Time Increment: 15 min Total Amount Collected: 14.4 gal
(Flow-Proportional Composite): Collected from (Date/Time):
To (Date/Time):
Set Volume Subsample/Volume Flow: Total Amount Collected:
For variable volume subsamples based on flow/set time Increments—Attach sample and flow information
Sample collected by: (print) Patricia DeRosch Affiliation: RWSA
(sign)
*Temperature of sample in sample collection device: 20 °C
*Final temperature of effluent at sample collection point: 23.1
*Is sample collection device chilled? Yes Is sample packed on ice for shipment? Yes
*It is required that all samples remain at 0-6°C during collection period and shipment for data to be accepted by the appropriate Regulatory Agency (Do not freeze!)
Is the sample chlorinated? NO dechlorinated? N/A If so, how?
Permit with interim chlorine limit? NO If yes- limit (mg/L):
Field pH 7.10 Field Total Residual Chlorine 0 Time: 1045 Grab time: 1035
Name of Analyst: Patricia DeRosch Affiliation: RWSA
Comments/Sample description: Fine Effluent
Method of Shipment: Fed Ex
Shipment Date / Time: 9/27/2015 1160
Type of test(s) to be performed: Toxicity
(Specify organisms): C. Dubia, P. Promelas

PRINT & SIGN NAMES
Relinquished by: (Print) Patricia DeRosch /Sign: Date/Time: 8/27/2015 1600
Received by: (Print) /Sign: Date/Time:

Relinquished by: (Print) Fedex /Sign: Date/Time:
Received by: (Print) Mendy Hall /Sign: Mendy Hall Date/Time: 8-28-15 0925

Relinquished by: (Print) /Sign: Date/Time:
Received by: (Print) /Sign: Date/Time:

EFFLUENT CONDITION UPON ARRIVAL AT LABORATORY

JRA #: 15-12618C Arrival Temperature: 1.2 °C Date: 8-28-15 Time: 0925 Ice Present: Yes / No
Sample Volume: 5 Gal 1 Color: Light Green Odor: Some Solids: None pH: 7.61 DO (mg/L): 9.0
Conductivity (µmhos/cm): 564 @ 24.5 °C Salinity (ppt): <1 TRC (mg/L): <0.02
Method (For TRC): HACH 8167 Analyst:

Larval Fish Growth and Survival Test-7 Day Growth

Start Date:	8/25/2015	Test ID:	15-12618	Sample ID:	VA0025518
End Date:	9/1/2015	Lab ID:	JRR	Sample Type:	EFF1-POTW
Sample Date:		Protocol:	EPA-821-R-02-013	Test Species:	PP-Pimephales promelas
Comments:					

Conc-%	1	2	3	4
CONTROL	0.9566	0.8055	0.9772	0.8423
6.25	0.9891	0.7680	0.8053	0.7128
12.5	0.8759	0.6848	0.8515	0.8182
25	0.7589	0.8876	0.7354	0.8646
50	0.9233	0.8532	0.8632	0.9490
100	0.9054	0.9331	0.9962	1.0899

			Transform: Untransformed					Isotonic	
Conc-%	Mean	N-Mean	Mean	Min	Max	CV%	N	Mean	N-Mean
CONTROL	0.8954	1.0000	0.8954	0.8055	0.9772	9.419	4	0.8954	1.0000
6.25	0.8188	0.9145	0.8188	0.7128	0.9891	14.622	4	0.8633	0.9641
12.5	0.8076	0.9019	0.8076	0.6848	0.8759	10.552	4	0.8633	0.9641
25	0.8116	0.9064	0.8116	0.7354	0.8876	9.321	4	0.8633	0.9641
50	0.8972	1.0020	0.8972	0.8532	0.9490	5.171	4	0.8633	0.9641
100	0.9812	1.0958	0.9812	0.9054	1.0899	8.343	4	0.8633	0.9641

Auxillary Tests	Statistic	Critical	Skew	Kurt
Shapiro-Wilk's Test indicates normal distribution (p > 0.05)	0.9654	0.916	0.31776	-0.5427
Bartlett's Test indicates equal variances (p = 0.82)	2.21983	15.0863		

Linear Interpolation (200 Resamples)

Point	%	SD	95% CL(Exp)	Skew
IC05	>100			
IC10	>100			
IC15	>100			
IC20	>100			
IC25	>100 ✓			
IC40	>100			
IC50	>100			

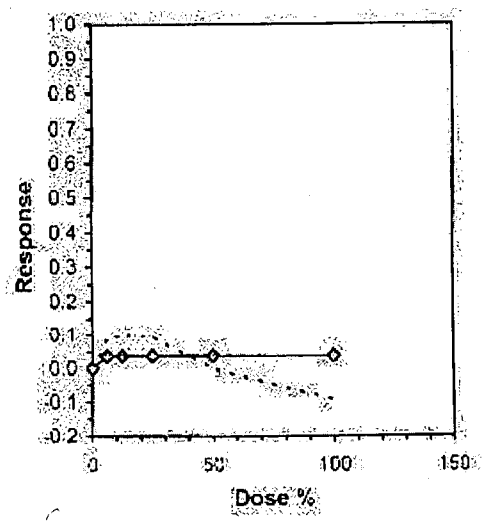

ToxCalc v5.0.32

Reviewed by: LP

Toxicity Test Sample Chain of Custody

PLEASE COMPLETE ALL INFORMATION

Facility: Moores Creek WRRF
NPDES#: VA 0025518
Address: 695 Moores Creek Lane, Charlottesville VA 22902
County: Albemarle Pipe/Outfall/Location: Outfall 001
Flow Type (Circle One): Continuous Intermittent Batch Stormwater Other:
Instream Waste Conc: 96%

Type of sample:
( ) (Grab): Date ____ Time ____ Amount of Sample Collected ____
(✓) (Time Composite): Collected from (Date/Time) 8/25/2015 1000
To (Date/Time): 8/26/2015 1000
Number/Volume of Subsamples: 96/150 Time Increment: 15 min Total Amount Collected: 9 L/L
( ) (Flow Proportional Composite:): Collected from (Date/Time): ____
To (Date/Time): ____
Set Volume Subsample/Volume Flow: ____ Total Amount Collected: ____
For variable volume subsamples based on flow/set time increments – Attach sample and flow information.
Sample collected by: (print) Patricia DeBaugh Affiliation: RWSA
(sign) [signature]

*Temperature of sample in sample collection device ____
*Final temperature of effluent at sample collection point ____
*Is sample collection device chilled? Yes Is sample packed on ice for shipment? Yes
*It is required that all samples remain at 0-6°C during collection period and shipment for data to be accepted by the appropriate Regulatory Agency (Do not freeze!)
Is the sample chlorinated? NO dechlorinated? N/A If so, how? ____
Permit with interim chlorine limit? NO If yes- limit (mg/L) ____
Field pH 7.01 Field Total Residual Chlorine 0 Time 1020 Grab time 1010
Name of Analyst: Patricia DeBaugh Affiliation: ____
Comments/Sample description: Final Effluent
Method of Shipment: Fed Ex
Shipment Date / Time: 8/26/2015 1160
Type of test(s) to be performed: toxicity
(Specify organisms): C. Dubia P. Promelas

PRINT & SIGN NAMES
Relinquished by: (Print) Patricia DeBaugh /Sign [signature] Date/Time 8/26/2015 1160
Received by: (Print) ____ /Sign ____ Date/Time ____

Relinquished by: (Print) Fedex /Sign ____ Date/Time ____
Received by: (Print) Mendyhall /Sign Mendyhall Date/Time 8-27-15 @ 0955

Relinquished by: (Print) ____ /Sign ____ Date/Time ____
Received by: (Print) ____ /Sign ____ Date/Time ____

EFFLUENT CONDITION UPON ARRIVAL AT LABORATORY

JRA #: 15/2618B Arrival Temperature: 3.9°C Date: 8-27-15 Time: 0955 Ice Present: Yes/No
Sample Volume: 3.5 Gal Color: Light brown Odor: Some Solids: None pH: 7.68 DO (mg/L): 8.9
Conductivity (µmhos/cm) 155 @ 25.3 °C Salinity (ppt): <1 TRC (mg/L): <0.02
Method (For TRC): HACH 8167 Analyst: [signature]

VPDES Permit Application Addendum

1. **Entity to whom the permit is to be issued:** Rivanna Water and Sewer Authority
   Who will be legally responsible for the wastewater treatment facilities and compliance with the permit? This may or may not be the facility or property owner.

2. **Is this facility located within city or town boundaries?** ☐ YES ☑ NO
   Include a topographic map identifying the location of the facility, the property boundaries, and the discharge point.

3. **What is the tax map parcel number for the land where this facility is located?** 77.22A;77.38B;77.40A

4. **For the facility to be covered by this permit, how many acres will be disturbed during the next five years due to new construction activities?** <2

5. ALL FACILITIES: **What is the design average flow of this facility?** 15 MGD
   Industrial facilities: **What is the maximum 30-day avg. production level (include units)?** N/A

   In addition to the above design flow or production level, should the permit be written with limits for any other discharge flow tiers or production levels? ☐ YES ☑ NO

   If "Yes", please specify the other flow tiers (in MGD) or production levels: _____
   Please consider: Is your facility's design flow considerably greater than your current flow? Do you plan to expand operations during the next five years?

6. **Nature of operations generating wastewater:**

   _____

   99.997 % of flow from domestic connections/sources
   Number of private residences to be served by the wastewater treatment facilities: ☐ 0 ☐ 1-49 ☑ 50 or more

   .003 % of flow from non-domestic connections/sources

7. **Mode of discharge:** ☑ Continuous ☐ Intermittent ☐ Seasonal
   Describe frequency and duration of intermittent or seasonal discharges:

   _____

8. **Identify the characteristics of the receiving stream at the point just above the facility's discharge point:**
   ☑ Permanent stream, never dry
   ☐ Intermittent stream, usually flowing, sometimes dry
   ☐ Ephemeral stream, wet-weather flow, often dry
   ☐ Effluent-dependent stream, usually or always dry
   ☐ Lake or pond at or below the discharge point
   ☐ Other: _____

9. **Consent to receive electronic mail**
   The Department of Environmental Quality (DEQ) may deliver permits, certifications and plan approvals to recipients, including applicants or permittees, by electronically certified mail where the recipients notify DEQ of their consent to receive mail electronically (§ 10.1-1183). Check *only one* of the following to consent to or decline receipt of electronic mail from DEQ as follows:

   ☑ Applicant or permittee agrees to receive by electronic mail the permit and any plan approvals associated with the permit that may be issued for the proposed pollutant management activity, and to certify receipt of such electronic mail when requested by the DEQ.
   Please provide email: tcastillo@rivanna.org

   ☐ Applicant or permittee declines to receive by electronic mail the permit and any plan approvals associated with the permit that may be issued for the proposed pollutant management activity.

VPDES Sewage Sludge Permit Application for Permit Reissuance

Instructions

WHO MUST SUBMIT THE APPLICATION - All facilities with a current VPDES Permit that authorizes the discharge of treated sewage wastewater that are applying for reissuance must complete and submit this application.
Part 1 is general information to be provided by all facilities.
Part 2 must be completed by all facilities that generate Class A or Class B biosolids that are land applied.
Part 3 must be completed by all facilities that land apply Class B biosolids.

Part 1 – Sludge Disposal Management (To be completed by all facilities)

Facility Name: Moores Creek AWRRF **VPDES Permit No:** VA0022518

1. **Shipment Off Site for Treatment or Blending**

   Is sewage sludge from your facility sent to another facility that provides treatment or blending? ☑ Yes ☐ No

   If you send sewage sludge to more than one facility, attach additional sheets as necessary.

   Shipment off site is: ☑ The primary method of sludge disposal ☐ A back up method of sludge disposal

   a. Receiving Facility Name McGill Environmental Systems at McGill Sussex at Waverly, VA
   b. Receiving Facility VPDES Permit No. _____
   c. Include an acceptance letter from the Receiving Facility.
   d. Receiving Facility's ultimate disposal method for sewage sludge Composting

2. **Disposal in a Municipal Solid Waste Landfill**

   Is sewage sludge from your facility placed in a municipal solid waste landfill? ☐ Yes ☑ No

   If sewage sludge is placed on more than one municipal solid waste landfill, attach additional pages as necessary.

   Landfilling is: ☐ The primary method of sludge disposal ☐ A back up method of sludge disposal

   a. Landfill Name _____
   b. Landfill Permit No. _____
   c. Include an acceptance letter from the landfill.

3. **Incineration**

   Is sewage sludge from your facility fired in a sewage sludge incinerator? ☐ Yes ☑ No

   Incineration is: ☐ The primary method of sludge disposal ☐ A back up method of sludge disposal

   a. Do you own or operate all sewage sludge incinerators in which sewage sludge from your facility is fired? ☐ Yes ☐ No

      If yes, provide the Air Registration No. _____

      If no, complete items b - d for each incinerator that you do not own or operate.

   b. Facility Name _____
   c. Air Registration No. _____
   d. Include an acceptance letter from the Incinerator.

4. **Class A Biosolids**

   Do you produce Class A biosolids for land application or distribution and marketing? If yes, complete Part 2. ☐ Yes ☑ No

   Are Class A biosolids from your facility land applied in bulk? ☐ Yes ☐ No

   Do you sell or give away Class A biosolids in a bag or other container for application to the land? If yes, provide the VDACS certification number? _____ ☐ Yes ☐ No

5. **Class B Biosolids**

   Do you produce Class B biosolids? If yes, complete Part 2. ☐ *Yes* ☑ *No*

   Are Class B biosolids from your facility land applied land applied under the authorization of this VPDES Permit? If yes, complete Part 3. ☐ *Yes* ☐ *No*

6. **Land Application Under a Separate Permit**

   Are biosolids from your facility land applied under the authorization of a permit other than your VPDES Permit? ☐ Yes ☑ No

   Biosolids are land applied under the authorization of a ☐ VPA permit ☐ Another VPDES Permit ☐ Out of State

   Complete items a - c for each VPA permit authorized to land apply biosolids from your facility.

   a. Permittee Name _____ b. Permit No. _____

   _____ _____

   c. Include copy of any information you provide to the Receiving VPDES or VPA Permittee to comply with the "notice and necessary information" requirement of 9VAC25-31-530 F.

VPDES Sewage Sludge Permit Application for Permit Reissuance

Part 2 – Biosolids Characterization (To be completed by all facilities that generate biosolids that are land applied.)

1. Have there been changes to sludge treatment processes or storage facilities since the previous permit issuance/reissuance? ☐ Yes ☑ No
2. Do the biosolids generated under this permit that will be land applied meet one of the Class A pathogen requirements in 9VAC25-31-710 A 3 through A 8 or Class B pathogen requirements in 9VAC25-31-710 B 1 through B 4? ☐ Yes ☑ No

   Identify the pathogen reduction option utilized to demonstrate compliance with the pathogen reductions requirements and provide the data that demonstrate compliance with the applicable alternative. N/A
3. Do the biosolids generated under this permit that will be land applied meet one of the vector attraction reduction requirements in 9VAC25-31-720 B 1 through B 10? ☐ Yes ☐ No

   Identify the vector attraction reduction option utilized to demonstrate compliance with the vector attraction reductions requirements and provide the data that demonstrate compliance with the applicable alternative. N/A
4. Do the biosolids to be land applied meet the ceiling/pollutant concentrations in 9VAC25-31-540 B? ☐ Yes ☐ No
5. Has data from the most recent 3 samples for pH (S.U.), Percent Solids (%), Ammonium Nitrogen (mg/kg), Nitrate Nitrogen (mg/kg), Total Kjeldahl Nitrogen (mg/kg), Total Phosphorus (mg/kg), Total Potassium (mg/kg), Alkalinity as $CaCO_3$ (mg/kg), Arsenic (mg/kg), Cadmium (mg/kg), Copper (mg/kg), Lead (mg/kg), Mercury (mg/kg), Nickel (mg/kg), Selenium (mg/kg), Zinc (mg/kg) been submitted to DEQ? The samples shall be no more than 4½ years old and each sampling date shall be at least 1 month apart. ☐ Yes ☐ No

   If no, provide the data with this application.

Part 3 – Land Application of Class B Biosolids (To be completed by all facilities that land apply Class B biosolids.)

1. Provide to DEQ and to each locality in which biosolids are to be land applied, written evidence of financial responsibility. Evidence of financial responsibility shall be provided in accordance with 9VAC25-31-100 P 9.
2. For each site, provide a properly completed landowner agreement for each landowner, using the most current Land Application Agreement - Biosolids Form (VPDES Sewage Sludge Permit Application Form – Attachment to Section C).
3. Are any new land application fields proposed at this reissuance? ☐ Yes ☐ No

   If yes, contact the DEQ Regional Office for additional submittal requirements.
4. For the currently permitted land application fields, are the previously submitted site booklets, maps and acreage accurate. ☐ Yes ☐ No

   If no, contact the DEQ Regional Office for additional submittal requirements.
5. Does the facility's Biosolids Management Plan on file with DEQ include the following minimum information? ☐ Yes ☐ No
   a. An odor control plan that addresses the abatement of odors resulting from the storage and/or land application of biosolids.
   b. A description of the transport vehicles to be used.
   c. Procedures for biosolids offloading at the land application site including spill prevention, cleanup (including vehicle cleaning), field reclamation, and emergency notification and cleanup measures.
   d. A description of the land application equipment including procedures for calibrating equipment to ensure uniform distribution and appropriate loading rates.
   e. Procedures used to ensure that land application activities address notification requirements, signage requirements, slope restrictions, operation limitations during periods of inclement weather, soil pH requirements, buffer zone requirements, and site restrictions.
   f. Any other information necessary to ensure compliance with the requirements of the Biosolids Program of the VPDES Permit Regulation (9VAC25-31-420 through 720).

Certification

I certify under penalty of law that this document and all attachments were prepared under my direction or supervision in accordance with a system designed to assure that qualified personnel properly gather and evaluate the information submitted. Based on my inquiry of the person or persons who manage the system or those persons directly responsible for gathering the information, the information is, to the best of my knowledge and belief, true, accurate, and complete. I am aware that there are significant penalties for submitting false information, including the possibility of fine and imprisonment for knowing violations.

Name and Official Title: Timothy E. Castillo, Wastewater Manager

Signature:

Telephone number / Email: (434) 977-2970 / ext 112

Date signed: 10/26/2015

(Based on a review of this information, it may be necessary to submit additional information to meet other legal or technical review requirements.)

VPDES/VPA Permit Billing Information Form
for Annual Maintenance Fee

Facility Name: Moores Creek Advanced Water Resource Recovery Facility

Permit Number: VA0025518

Owner Name: Rivanna Water and Sewer Authority

Owner Address: 695 Moores Creek Lane

Charlottesville, VA 22902

Billing Contact Name: Timothy E. Castillo

Title: Wastewater Manager

Phone Number: 434-977-2970 ext.112

E-Mail Address: tcastillo@rivanna.org

PUBLIC NOTICE BILLING INFORMATION

I hereby authorize the Department of Environmental Quality to have the cost of publishing a public notice billed to the Agent/Department shown below. The public notice will be published once a week for two consecutive weeks in Charlottesville Daily Progress in accordance with 9 VAC 25-31-290.C.2.

Agent/Department to be billed: Wastewater Department

Owner: Rivanna Water and Sewer Authority

Agent/Department Address: 695 Moores Creek Lane

Charlottesville, VA 22902

Agent's Telephone No.: 434-977-2970 ext. 112

Printed Name: Timothy E. Castillo - Wastewater Manager

Authorizing Agent – Signature:

Date: October 26, 2015

Facility Name: Moores Creek AWRRF

VPDES Permit No. VA 0025518

FACILITY NAME: Moores Creek Regional STP
ADDRESS: 695 Moores Creek Lane
Charlottesville, VA 22902

Permit No. VA0025518
Attachment A

DEPARTMENT OF ENVIRONMENTAL QUALITY
WATER QUALITY MONITORING

OUTFALL NO. 001

CASRN#	CHEMICAL	EPA ANALYSIS NO.	QUANTIFICATION LEVEL(1)	REPORTING RESULTS	SAMPLE TYPE(2)	SAMPLE FREQUENCY
PESTICIDES/PCBS						
333-41-5	Diazinon	(3)	(4)		G or C	1/5 YR
ACID EXTRACTABLES (5)						
104-40-51	Nonylphenol	(3)	(4)		G or C	1/5 YR

Timothy E Cowillo, Wastewater Manager
Name of Principal Exec. Officer or Authorized Agent/Title

2/1/16
Signature of Principal Officer or Authorized Agent/Date

I certify under penalty of law that this document and all attachments were prepared under my direction or supervision in accordance with a system designed to assure that qualified personnel properly gather and evaluate the information submitted. Based on my inquiry of the person or persons who manage the system or those persons directly responsible for gathering the information, the information submitted is to the best of my knowledge and belief, true, accurate, and complete. I am aware that there are significant penalties for submitting false information including the possibility of fine and imprisonment for knowing violations. See 18 U.S.C. Sec. 1001 and 33 U.S.C. Sec. 1319. (Penalties under these statutes may include fines up to $10,000 and or maximum imprisonment of between 6 months and 5 years.)

Footnotes to Water Quality Monitoring Attachment A

(1) Quantification level (QL) is defined as the lowest concentration used for the calibration of a measurement system when the calibration is in accordance with the procedures published for the required method.

The quantification levels indicated for the metals are actually Specific Target Values developed for this permit. The Specific Target Value is the approximate value that may initiate a wasteload allocation analysis. Target values are not wasteload allocations or effluent limitations. The Specific Target Values are subject to change based on additional information such as hardness data, receiving stream flow, and design flows.

Units for the quantification level are micrograms/liter unless otherwise specified.

Quality control and quality assurance information shall be submitted to document that the required quantification level has been attained.

(2) Sample Type

G = Grab = An individual sample collected in less than 15 minutes. Substances specified with "grab" sample type shall only be collected as grabs. The permittee may analyze multiple grabs and report the average results provided that the individual grab results are also reported. For grab metals samples, the individual samples shall be filtered and preserved immediately upon collection.

C = Composite = A 24-hour composite unless otherwise specified. The composite shall be a combination of individual samples, taken proportional to flow, obtained at hourly or smaller time intervals. The individual samples may be of equal volume for flows that do not vary by +/- 10 percent over a 24-hour period.

(3) Any approved method presented in 40 CFR Part 136.

(4) The QL is at the discretion of the permittee. For any substances addressed in 40 CFR Part 136, the permittee shall use one of the approved methods in 40 CFR Part 136.

(5) Testing for phenols requires continuous extraction.

Dameron, Jason (DEQ)

From: Timothy Castillo [TCastillo@rivanna.org]
Sent: Monday, December 07, 2015 7:03 PM
To: Dameron, Jason (DEQ)
Subject: FW: Analytical Data Report for 11/20/15 Rivanna - Moore's Creek
Attachments: 112015 - RV_MC_FNE.pdf

Importance: High

Jason,

Here is data from the 11/20/15 sampling event. Please let me know if there is anything further you need.

Thanks

RIVANNA
WATER & SEWER AUTHORITY

Timothy E. Castillo
Wastewater Manager
Rivanna Water & Sewer Authority
695 Moores Creek Lane
Charlottesville, Va 22902
434-977-2970 Ext 112

From: Fordyce, Kimberly [mailto:KFordyce@hrsd.com]
Sent: Monday, December 7, 2015 3:12 PM
To: Timothy Castillo <TCastillo@rivanna.org>; Stuart Wilson <swilson@rivanna.org>; Barker, Danny <DBARKER@HRSD.COM>
Subject: Analytical Data Report for 11/20/15 Rivanna - Moore's Creek
Importance: High

Hello - Please find attached the analytical data report from the 11/20/2015 sampling event.

Have a great day,
Kim

Kimberly Fordyce
HRSD CEL - MAP Coordinator
(Central Environmental Laboratory – Municipal Assistance Program)
Office: 757.460.4205
1432 Air Rail Avenue | Virginia Beach, VA 23455
kfordyce@hrsd.com | www.hrsd.com
http://www.hrsd.com/municipalassistanceprogram.shtml
Please consider the environment before printing this email.

HRSD
Cleaning wastewater every day for a better Bay.
1432 Air Rail Avenue, Virginia Beach, VA 23455-3002 • 757.460.4205 • Fax: 757.460.6586 • www.hrsd.com

11/20/15 - Rivanna - Moore's Creek - FNE

This analytical report contains 10 pages

Stuart Wilson
Rivanna Water & Sewer Authority
695 Moore's Creek Lane
Charlottesville, VA 22902

swilson@rivanna.org

Date Sent: **12/07/15**

HRSD CEL, Central Environmental Laboratory is VELAP/NELAC accredited by DCLS, the Division of Consolidated Laboratory Services.

VA Laboratory ID#: 460011

Analytical test results meet all requirements of VELAP/NELAC unless otherwise noted under the analysis.

Test results relate only to the sample tested. Clients should be aware that a critical step in chemical or microbiological analysis is the collection of the sample.

This report may not be reproduced, except in full, without written approval from HRSD.

If you have any questions concerning this report, please do not hesitate to contact Robin Parnell, CEL Laboratory Manager at (757) 460-4203.
rparnell@hrsd.com
Kim Fordyce, CEL Administrative Assistant at (757) 460-4205.
kfordyce@hrsd.com

CENTRAL ENVIRONMENTAL LABORATORY ANALYTICAL REPORT

VA Laboratory ID 460011

HRSD

Job ID: RV-20-NOV-15-046

Report Serial No.: 2015-2626

Sample ID: RV_MC_FB-C-112015-1
Sample Date: 11/20/2015
Customer Sample ID: Rivanna Water and Sewer Authority - Moores Creek WWTP - Field Blank
Sample ID: 473187
Sample Sub-Type: FB

Analyte	Method	CAS#	Unit	Result	Flag	LOQ	Analyst	Analysis Date	Analysis Time
Mercury, Dissolved	EPA 245.1	92786-62-4	ug/l	<0.10		0.10	ESTRANGE	11/25/15	10:46
Antimony, Dissolved	EPA 200.8, Rev. 5.4	7440-36-0	ug/l	<1.00		1.00	KWILLIAMS	12/02/15	10:46
Arsenic, Dissolved	EPA 200.8, Rev. 5.4	7440-38-2	ug/l	<0.50		0.50	KWILLIAMS	12/02/15	10:46
Beryllium, Dissolved	EPA 200.8, Rev. 5.4	7440-41-7	ug/l	<0.10		0.10	KWILLIAMS	12/02/15	10:46
Cadmium, Dissolved	EPA 200.8, Rev. 5.4	7440-43-9	ug/l	<0.05		0.05	KWILLIAMS	12/02/15	10:46
Chromium, Total	EPA 200.8, Rev. 5.4	7440-47-3	ug/l	<1.0		1.0	KWILLIAMS	12/02/15	10:40
Copper, Dissolved	EPA 200.8, Rev. 5.4	7440-50-8	ug/l	<0.50		0.50	KWILLIAMS	12/02/15	10:46
Lead, Dissolved	EPA 200.8, Rev. 5.4	7439-92-1	ug/l	<0.10		0.10	KWILLIAMS	12/02/15	10:46
Nickel, Dissolved	EPA 200.8, Rev. 5.4	7440-02-0	ug/l	<0.50		0.50	KWILLIAMS	12/02/15	10:46
Selenium, Total	EPA 200.8, Rev. 5.4	7782-49-2	ug/l	<0.5		0.5	KWILLIAMS	12/02/15	10:40
Silver, Dissolved	EPA 200.8, Rev. 5.4	7440-22-4	ug/l	<0.20		0.20	KWILLIAMS	12/02/15	10:46
Thallium, Dissolved	EPA 200.8, Rev. 5.4	7440-28-0	ug/l	<0.50		0.50	KWILLIAMS	12/02/15	10:46
Zinc, Dissolved	EPA 200.8, Rev. 5.4	7440-66-6	ug/l	2.92		1.00	KWILLIAMS	12/02/15	10:46

Notes

LOQ is lowest concentration at which quantitation is demonstrated.
*Analyte is not included in the HRSD CEL VELAP scope of accreditation

CENTRAL ENVIRONMENTAL
LABORATORY
ANALYTICAL REPORT
VA Laboratory ID 460011

HRSD

Job ID: RV-20-NOV-15-046

Report Serial No.: 2015-2626

Sample ID: RV_MC_FNE-C-112015-1
Sample Date: 11/20/2015
Customer Sample ID: Rivanna Water and Sewer Authority - Moores Creek WWTP - FNE
Sample ID: 473186
Sample Sub-Type: SAMP

Analyte	Method	CAS#	Unit	Result	Flag	LOQ	Analyst	Analysis Date	Analysis Time
Hardness, Total	SM 2340B-2011	471-34-1	mg eq CaCO3/l	75.1		6.62	SLABOCKI	11/30/15	10:32
Mercury, Dissolved	EPA 245.1	92786-62-4	ug/l	<0.10		0.10	ESTRANGE	11/25/15	10:43
Antimony, Dissolved	EPA 200.8, Rev. 5.4	7440-36-0	ug/l	<1.00		1.00	KWILLIAMS	12/02/15	10:52
Arsenic, Dissolved	EPA 200.8, Rev. 5.4	7440-38-2	ug/l	<0.50		0.50	KWILLIAMS	12/02/15	10:52
Beryllium, Dissolved	EPA 200.8, Rev. 5.4	7440-41-7	ug/l	<0.10		0.10	KWILLIAMS	12/02/15	10:52
Cadmium, Dissolved	EPA 200.8, Rev. 5.4	7440-43-9	ug/l	<0.05		0.05	KWILLIAMS	12/02/15	10:52
Chromium, Total	EPA 200.8, Rev. 5.4	7440-47-3	ug/l	<1.0		1.0	KWILLIAMS	12/02/15	10:23
Copper, Dissolved	EPA 200.8, Rev. 5.4	7440-50-8	ug/l	1.01		0.50	KWILLIAMS	12/02/15	10:52
Lead, Dissolved	EPA 200.8, Rev. 5.4	7439-92-1	ug/l	<0.10		0.10	KWILLIAMS	12/02/15	10:52
Nickel, Dissolved	EPA 200.8, Rev. 5.4	7440-02-0	ug/l	1.20		0.50	KWILLIAMS	12/02/15	10:52
Selenium, Total	EPA 200.8, Rev. 5.4	7782-49-2	ug/l	<0.5		0.5	KWILLIAMS	12/02/15	10:23
Silver, Dissolved	EPA 200.8, Rev. 5.4	7440-22-4	ug/l	<0.20		0.20	KWILLIAMS	12/02/15	10:52
Thallium, Dissolved	EPA 200.8, Rev. 5.4	7440-28-0	ug/l	<0.50		0.50	KWILLIAMS	12/02/15	10:52
Zinc, Dissolved	EPA 200.8, Rev. 5.4	7440-66-6	ug/l	12.4		1.00	KWILLIAMS	12/02/15	10:52
1,2,4-Trichlorobenzene	EPA 625	120-82-1	ug/l	<10.0		10.0	IGERASIMOV	11/30/15	04:42
1,2-Diphenylhydrazine	EPA 625	122-66-7	ug/l	<10.0		10.0	IGERASIMOV	11/30/15	04:42
1,2-Diphenylhydrazine is converted to Azobenzene in the extraction process.									
2,4,6-Trichlorophenol	EPA 625	88-06-2	ug/l	<10.0		10.0	IGERASIMOV	11/30/15	04:42

Notes

LOQ is lowest concentration at which quantitation is demonstrated.
*Analyte is not included in the HRSD CEL VELAP scope of accreditation

Print Date: 12/7/2015

CENTRAL ENVIRONMENTAL
LABORATORY
ANALYTICAL REPORT
VA Laboratory ID 460011

HRSD

Job ID: RV-20-NOV-15-046

Report Serial No.: 2015-2626

Sample ID: RV_MC_FNE-C-112015-1
Sample Date: 11/20/2015
Customer Sample ID: Rivanna Water and Sewer Authority - Moores Creek WWTP - FNE
Sample ID: 473186
Sample Sub-Type: SAMP

Analyte	Method	CAS#	Unit	Result	Flag	LOQ	Analyst	Analysis Date	Analysis Time
2,4-Dichlorophenol	EPA 625	120-83-2	ug/l	<10.0		10.0	IGERASIMOV	11/30/15	04:42
2,4-Dimethylphenol	EPA 625	105-67-9	ug/l	<10.0		10.0	IGERASIMOV	11/30/15	04:42
2,4-Dinitrophenol	EPA 625	51-28-5	ug/l	<10.0		10.0	IGERASIMOV	11/30/15	04:42
2,4-DNT	EPA 625	121-14-2	ug/l	<10.0	IA1	10.0	IGERASIMOV	11/30/15	04:42
2,6-DNT	EPA 625	606-20-2	ug/l	<10.0	IA1	10.0	IGERASIMOV	11/30/15	04:42
2-Chloronaphthalene	EPA 625	91-58-7	ug/l	<10.0		10.0	IGERASIMOV	11/30/15	04:42
2-Nitrophenol	EPA 625	88-75-5	ug/l	<10.0		10.0	IGERASIMOV	11/30/15	04:42
3,3-Dichlorobenzidine	EPA 625	91-94-1	ug/l	<10.0		10.0	IGERASIMOV	11/30/15	04:42
4,6-Dinitro-o-Cresol	EPA 625	534-52-1	ug/l	<10.0		10.0	IGERASIMOV	11/30/15	04:42
4-Bromophenyl phenyl ether	EPA 625	101-55-3	ug/l	<10.0		10.0	IGERASIMOV	11/30/15	04:42
4-Chloro-m-cresol	EPA 625	59-50-7	ug/l	<10.0		10.0	IGERASIMOV	11/30/15	04:42
4-Chlorophenyl phenyl ether	EPA 625	7005-72-3	ug/l	<10.0		10.0	IGERASIMOV	11/30/15	04:42
4-Nitrophenol	EPA 625	100-02-7	ug/l	<10.0		10.0	IGERASIMOV	11/30/15	04:42
Acenaphthene	EPA 625	83-32-9	ug/l	<10.0		10.0	IGERASIMOV	11/30/15	04:42
Acenaphthylene	EPA 625	208-96-8	ug/l	<10.0		10.0	IGERASIMOV	11/30/15	04:42
Anthracene	EPA 625	120-12-7	ug/l	<10.0		10.0	IGERASIMOV	11/30/15	04:42
Benzidine	EPA 625	92-87-5	ug/l	<10.0		10.0	IGERASIMOV	11/30/15	06:08
Benzo(a) anthracene	EPA 625	56-55-3	ug/l	<10.0		10.0	IGERASIMOV	11/30/15	04:42

Notes

LOQ is lowest concentration at which quantitation is demonstrated.
*Analyte is not included in the HRSD CEL VELAP scope of accreditation
IA1 - Relative Percent Difference (RPD) between Matrix Spike (MS) and Matrix Spike Duplicate (MSD) was outside acceptable range.

Print Date: 12/7/2015

CENTRAL ENVIRONMENTAL
LABORATORY
ANALYTICAL REPORT
VA Laboratory ID 460011

HRSD

Job ID: RV-20-NOV-15-046

Report Serial No.: 2015-2626

Sample ID: RV_MC_FNE-C-112015-1
Sample Date: 11/20/2015
Customer Sample ID: Rivanna Water and Sewer Authority - Moores Creek WWTP - FNE
Sample ID: 473186
Sample Sub-Type: SAMP

Analyte	Method	CAS#	Unit	Result	Flag	LOQ	Analyst	Analysis Date	Analysis Time
Benzo(a) pyrene	EPA 625	50-32-8	ug/l	<10.0		10.0	IGERASIMOV	11/30/15	04:42
Benzo(b) fluoranthene	EPA 625	205-99-2	ug/l	<10.0		10.0	IGERASIMOV	11/30/15	04:42
Benzo(ghi) perylene	EPA 625	191-24-2	ug/l	<10.0		10.0	IGERASIMOV	11/30/15	04:42
Benzo(k) fluoranthene	EPA 625	207-08-9	ug/l	<10.0		10.0	IGERASIMOV	11/30/15	04:42
Bis(2-chloroethoxy) methane	EPA 625	111-91-1	ug/l	<10.0		10.0	IGERASIMOV	11/30/15	04:42
Bis(2-chloroethyl) ether	EPA 625	111-44-4	ug/l	<10.0		10.0	IGERASIMOV	11/30/15	04:42
Bis(2-chloroisopropyl) ether	EPA 625	108-60-1	ug/l	<10.0		10.0	IGERASIMOV	11/30/15	04:42
Butylbenzylphthalate	EPA 625	85-68-7	ug/l	<10.0		10.0	IGERASIMOV	11/30/15	04:42
Chrysene	EPA 625	218-01-9	ug/l	<10.0		10.0	IGERASIMOV	11/30/15	04:42
Di(2-ethylhexyl)phthalate	EPA 625	117-81-7	ug/l	<10.0		10.0	IGERASIMOV	11/30/15	04:42
Dibenzo (ah) anthracene	EPA 625	53-70-3	ug/l	<10.0		10.0	IGERASIMOV	11/30/15	04:42
Diethyl phthalate	EPA 625	84-66-2	ug/l	<10.0		10.0	IGERASIMOV	11/30/15	04:42
Dimethyl phthalate	EPA 625	131-11-3	ug/l	<10.0		10.0	IGERASIMOV	11/30/15	04:42
Di-n-butyl phthalate	EPA 625	84-74-2	ug/l	<10.0		10.0	IGERASIMOV	11/30/15	04:42
Di-n-octyl phthalate	EPA 625	117-84-0	ug/l	<10.0		10.0	IGERASIMOV	11/30/15	04:42
Fluoranthene	EPA 625	206-44-0	ug/l	<10.0		10.0	IGERASIMOV	11/30/15	04:42
Fluorene	EPA 625	86-73-7	ug/l	<10.0		10.0	IGERASIMOV	11/30/15	04:42
Hexachlorobenzene	EPA 625	118-74-1	ug/l	<10.0		10.0	IGERASIMOV	11/30/15	04:42

Notes

LOQ is lowest concentration at which quantitation is demonstrated.
*Analyte is not included in the HRSD CEL VELAP scope of accreditation

Print Date: 12/7/2015

CENTRAL ENVIRONMENTAL
LABORATORY
ANALYTICAL REPORT
VA Laboratory ID 460011

HRSD

Job ID: RV-20-NOV-15-046

Report Serial No.: 2015-2626

Sample ID: RV_MC_FNE-C-112015-1
Sample Date: 11/20/2015
Customer Sample ID: Rivanna Water and Sewer Authority - Moores Creek WWTP - FNE
Sample ID: 473186
Sample Sub-Type: SAMP

Analyte	Method	CAS#	Unit	Result	Flag	LOQ	Analyst	Analysis Date	Analysis Time
Hexachlorobutadiene	EPA 625	87-68-3	ug/l	<10.0		10.0	IGERASIMOV	11/30/15	04:42
Hexachlorocyclopentadiene	EPA 625	77-47-4	ug/l	<10.0		10.0	IGERASIMOV	11/30/15	04:42
Hexachloroethane	EPA 625	67-72-1	ug/l	<10.0		10.0	IGERASIMOV	11/30/15	04:42
Indeno (1,2,3-cd) pyrene	EPA 625	193-39-5	ug/l	<10.0		10.0	IGERASIMOV	11/30/15	04:42
Isophorone	EPA 625	78-59-1	ug/l	<10.0		10.0	IGERASIMOV	11/30/15	04:42
Naphthalene	EPA 625	91-20-3	ug/l	<10.0		10.0	IGERASIMOV	11/30/15	04:42
Nitrobenzene	EPA 625	98-95-3	ug/l	<10.0		10.0	IGERASIMOV	11/30/15	04:42
n-Nitrosodimethylamine	EPA 625	62-75-9	ug/l	<10.0		10.0	IGERASIMOV	11/30/15	04:42
n-Nitrosodi-n-Propylamine	EPA 625	621-64-7	ug/l	<10.0		10.0	IGERASIMOV	11/30/15	04:42
n-Nitrosodiphenylamine	EPA 625	86-30-6	ug/l	<10.0		10.0	IGERASIMOV	11/30/15	04:42
n-Nitrosodiphenylamine is converted to Diphenylamine in the injection port.									
o-Chlorophenol	EPA 625	95-57-8	ug/l	<10.0		10.0	IGERASIMOV	11/30/15	04:42
Pentachlorophenol	EPA 625	87-86-5	ug/l	<10.0		10.0	IGERASIMOV	11/30/15	04:42
Phenanthrene	EPA 625	85-01-8	ug/l	<10.0		10.0	IGERASIMOV	11/30/15	04:42
Phenol	EPA 625	108-95-2	ug/l	<10.0		10.0	IGERASIMOV	11/30/15	04:42
Pyrene	EPA 625	129-00-0	ug/l	<10.0		10.0	IGERASIMOV	11/30/15	04:42
Total Dissolved Solids	SM 2540C, 2011		mg/l	274		1.0	MALCORN	11/23/15	11:38

Notes

LOQ is lowest concentration at which quantitation is demonstrated.
*Analyte is not included in the HRSD CEL VELAP scope of accreditation

CENTRAL ENVIRONMENTAL
LABORATORY
ANALYTICAL REPORT
VA Laboratory ID 460011

HRSD

Job ID: RV-20-NOV-15-046

Report Serial No.: 2015-2626

Sample ID: RV_MC_FNE-G-112015-1
Sample Date: 11/20/2015
Customer Sample ID: Rivanna Water and Sewer Authority - Moores Creek WWTP - FNE
Sample ID: 473188
Sample Sub-Type: SAMP

Analyte	Method	CAS#	Unit	Result	Flag	LOQ	Analyst	Analysis Date	Analysis Time
Total Cyanide	Lachat 10-204-00-1X	74-90-8	mg/l	<0.01		0.01	GBROWN	11/24/15	11:04
HEM (Total Oil and Grease)	EPA 1664B		mg/l	<5.0		5.0	ANROBERTS	11/24/15	08:10
Phenols, Total	Lachat 10-210-00-1-B	108-95-2	mg/l	<0.05		0.05	ANROBERTS	11/23/15	14:44
1,1,1-Trichloroethane	EPA 624	71-55-6	ug/l	<10.0		10.0	SLOPEZ	11/22/15	15:11
1,1,2,2-Tetrachloroethane	EPA 624	79-34-5	ug/l	<10.0		10.0	SLOPEZ	11/22/15	15:11
1,1,2-Trichloroethane	EPA 624	79-00-5	ug/l	<10.0		10.0	SLOPEZ	11/22/15	15:11
1,1-Dichloroethane	EPA 624	75-34-3	ug/l	<10.0		10.0	SLOPEZ	11/22/15	15:11
1,1-Dichloroethylene	EPA 624	75-35-4	ug/l	<10.0		10.0	SLOPEZ	11/22/15	15:11
1,2-Dichlorobenzene	EPA 624	95-50-1	ug/l	<10.0		10.0	SLOPEZ	11/22/15	15:11
1,2-Dichloroethane	EPA 624	107-06-2	ug/l	<10.0		10.0	SLOPEZ	11/22/15	15:11
1,2-Dichloropropane	EPA 624	78-87-5	ug/l	<10.0		10.0	SLOPEZ	11/22/15	15:11
1,3-Dichlorobenzene	EPA 624	541-73-1	ug/l	<10.0		10.0	SLOPEZ	11/22/15	15:11
1,3-Dichloropropene (cis+trans)	EPA 624	10061-01-5/10061-02-	ug/l	<20.0		20.0	SLOPEZ	11/22/15	15:11
1,4-Dichlorobenzene	EPA 624	106-46-7	ug/l	<10.0		10.0	SLOPEZ	11/22/15	15:11
2-Chloroethyl Vinyl Ether	EPA 624	110-75-8	ug/l	<10.0		10.0	SLOPEZ	11/22/15	15:11
Acrolein	EPA 624	107-02-8	ug/l	<50.0		50.0	SLOPEZ	11/22/15	14:42
Acrylonitrile	EPA 624	107-13-1	ug/l	<10.0		10.0	SLOPEZ	11/22/15	15:11

Notes

LOQ is lowest concentration at which quantitation is demonstrated.
*Analyte is not included in the HRSD CEL VELAP scope of accreditation

Print Date: 12/7/2015

CENTRAL ENVIRONMENTAL LABORATORY ANALYTICAL REPORT

VA Laboratory ID 460011

HRSD

Job ID: RV-20-NOV-15-046

Report Serial No.: 2015-2626

Sample ID: RV_MC_FNE-G-112015-1
Sample Date: 11/20/2015
Customer Sample ID: Rivanna Water and Sewer Authority - Moores Creek WWTP - FNE
Sample ID: 473188
Sample Sub-Type: SAMP

Analyte	Method	CAS#	Unit	Result	Flag	LOQ	Analyst	Analysis Date	Analysis Time
Benzene	EPA 624	71-43-2	ug/l	<10.0		10.0	SLOPEZ	11/22/15	15:11
Bromodichloromethane	EPA 624	75-27-4	ug/l	<10.0		10.0	SLOPEZ	11/22/15	15:11
Bromoform	EPA 624	75-25-2	ug/l	<10.0		10.0	SLOPEZ	11/22/15	15:11
Bromomethane	EPA 624	74-83-9	ug/l	<10.0		10.0	DLO	11/23/15	16:12
Carbon Tetrachloride	EPA 624	56-23-5	ug/l	<10.0		10.0	SLOPEZ	11/22/15	15:11
Chlorobenzene	EPA 624	108-90-7	ug/l	<10.0		10.0	SLOPEZ	11/22/15	15:11
Chlorodibromomethane	EPA 624	124-48-1	ug/l	<10.0		10.0	SLOPEZ	11/22/15	15:11
Chloroethane	EPA 624	75-00-3	ug/l	<10.0		10.0	SLOPEZ	11/22/15	15:11
Chloroform	EPA 624	67-66-3	ug/l	<10.0		10.0	SLOPEZ	11/22/15	15:11
Chloromethane	EPA 624	74-87-3	ug/l	<10.0		10.0	SLOPEZ	11/22/15	15:11
cis-1,3-Dichloropropene	EPA 624	10061-01-5	ug/l	<10.0		10.0	SLOPEZ	11/22/15	15:11
Ethylbenzene	EPA 624	100-41-4	ug/l	<10.0		10.0	SLOPEZ	11/22/15	15:11
Methylene Chloride	EPA 624	75-09-2	ug/l	<10.0		10.0	SLOPEZ	11/22/15	15:11
Tetrachloroethene	EPA 624	127-18-4	ug/l	<10.0		10.0	SLOPEZ	11/22/15	15:11
Toluene	EPA 624	108-88-3	ug/l	<10.0		10.0	SLOPEZ	11/22/15	15:11
trans-1,2-Dichloroethene	EPA 624	156-60-5	ug/l	<10.0		10.0	SLOPEZ	11/22/15	15:11
trans-1,3-Dichloropropene	EPA 624	10061-02-6	ug/l	<10.0		10.0	SLOPEZ	11/22/15	15:11
Trichloroethylene	EPA 624	79-01-6	ug/l	<10.0		10.0	SLOPEZ	11/22/15	15:11

Notes

LOQ is lowest concentration at which quantitation is demonstrated.
*Analyte is not included in the HRSD CEL VELAP scope of accreditation

Print Date: 12/7/2015

CENTRAL ENVIRONMENTAL
LABORATORY
ANALYTICAL REPORT
VA Laboratory ID 460011

HRSD

Job ID: RV-20-NOV-15-046

Report Serial No.: 2015-2626

Sample ID: RV_MC_FNE-G-112015-1
Sample Date: 11/20/2015
Customer Sample ID: Rivanna Water and Sewer Authority - Moores Creek WWTP - FNE
Sample ID: 473188
Sample Sub-Type: SAMP

Analyte	Method	CAS#	Unit	Result	Flag	LOQ	Analyst	Analysis Date	Analysis Time
Vinyl Chloride	EPA 624	75-01-4	ug/l	<10.0		10.0	SLOPEZ	11/22/15	15:11

Notes

LOQ is lowest concentration at which quantitation is demonstrated.
*Analyte is not included in the HRSD CEL VELAP scope of accreditation

Authorized By: Robin Parnell - Lab Manager Robin Parnell

Date Authorized: 12/7/2015

HRSD
Cleaning wastewater every day for a better Bay.

CENTRAL ENVIRONMENT LABORATORY
1432 AIR RAIL AVENUE
VIRGINIA BEACH, VA 23455
TEL: 757-460-4214
FAX: 757-460-6586

CHAIN OF CUSTODY

COC ID: 22567 COC NAME: _11/20/15 17:38

Sample ID	Container No	Job Name	Date	Time	Sampler Id	Matrix	Type	Samp Temp	Preservation	Status	CN_FIA	HARDNE	HEM	HG_CVA	ICP_200	ICPMS_2	NH3	NOX	PHNL_FI	SEMIVO	TDS	TKN	TP	VOC624
RV_GM_FNE-C-112015-1	C283404	RV-20-NOV-15-047	11/20/2015	1315	BWECKWORT	L	C	1.9	pH < 2	R							X							
	C283403	RV-20-NOV-15-047	11/20/2015	1315	BWECKWORT	L	C	2.2		R											X			
	C283402	RV-20-NOV-15-047	11/20/2015	1315	BWECKWORT	L	C	1.8	pH < 2	R								X				X	X	
RV_GM_FNE-G-112015-1	C283408	RV-20-NOV-15-047	11/20/2015	1315	BWECKWORT	L	G	4.1		R			X											
	C283407	RV-20-NOV-15-047	11/20/2015	1315	BWECKWORT	L	G	2.9		R			X											
	C283406	RV-20-NOV-15-047	11/20/2015	1315	BWECKWORT	L	G	3.9		R			X											
	C283405	RV-20-NOV-15-047	11/20/2015	1315	BWECKWORT	L	G	3.4		R			X											
RV_MC_FB-C-112015-1	C283397	RV-20-NOV-15-046	11/20/2015	1150	BWECKWORT	L	C			R				X		X								
	C283396	RV-20-NOV-15-046	11/20/2015	1150	BWECKWORT	L	C			R						X								
RV_MC_FNE-C-112015-1	C283427	RV-20-NOV-15-046	11/20/2015	1150	BWECKWORT	L	C	2.7		R										X				
	C283426	RV-20-NOV-15-046	11/20/2015	1150	BWECKWORT	L	C	3.4		R										X				
	C283425	RV-20-NOV-15-046	11/20/2015	1150	BWECKWORT	L	C	2.5		R										X				
	C283424	RV-20-NOV-15-046	11/20/2015	1150	BWECKWORT	L	C	2.2		R										X				
	C283423	RV-20-NOV-15-046	11/20/2015	1150	BWECKWORT	L	C	3.1		R										X				
	C283422	RV-20-NOV-15-046	11/20/2015	1150	BWECKWORT	L	C	2.1		R										X				
	C283421	RV-20-NOV-15-046	11/20/2015	1150	BWECKWORT	L	C	3.4		R										X				
	C283420	RV-20-NOV-15-046	11/20/2015	1150	BWECKWORT	L	C	4.0		R										X				
	C283395	RV-20-NOV-15-046	11/20/2015	1150	BWECKWORT	L	C	2.9		R											X			
	C283394	RV-20-NOV-15-046	11/20/2015	1150	BWECKWORT	L	C	3.3		R										X				
	C283393	RV-20-NOV-15-046	11/20/2015	1150	BWECKWORT	L	C			R				X		X								
	C283392	RV-20-NOV-15-046	11/20/2015	1150	BWECKWORT	L	C			R		X			X	X								
RV_MC_FNE-G-112015-1	C283419	RV-20-NOV-15-046	11/20/2015	1100	BWECKWORT	L	G	4.1		R			X											
	C283418	RV-20-NOV-15-046	11/20/2015	1100	BWECKWORT	L	G	3.7		R			X											
	C283417	RV-20-NOV-15-046	11/20/2015	1100	BWECKWORT	L	G	4.1		R			X											
	C283416	RV-20-NOV-15-046	11/20/2015	1100	BWECKWORT	L	G	2.6		R														X
	C283415	RV-20-NOV-15-046	11/20/2015	1100	BWECKWORT	L	G	2.2		R														X
	C283414	RV-20-NOV-15-046	11/20/2015	1100	BWECKWORT	L	G	4.3		R														X
	C283413	RV-20-NOV-15-046	11/20/2015	1100	BWECKWORT	L	G	2.5		R														X
	C283412	RV-20-NOV-15-046	11/20/2015	1100	BWECKWORT	L	G	3.7		R														X
	C283411	RV-20-NOV-15-046	11/20/2015	1100	BWECKWORT	L	G	2.6		R														X
	C283410	RV-20-NOV-15-046	11/20/2015	1100	BWECKWORT	L	G	3.6		R														X
	C283409	RV-20-NOV-15-046	11/20/2015	1100	BWECKWORT	L	G	2.4		R														
	C283401	RV-20-NOV-15-046	11/20/2015	1100	BWECKWORT	L	G	3.8		R			X											
	C283400	RV-20-NOV-15-046	11/20/2015	1100	BWECKWORT	L	G	2.2	pH > 10	R	X													
	C283399	RV-20-NOV-15-046	11/20/2015	1100	BWECKWORT	L	G	2.8	pH < 2	R									X					
	C283398	RV-20-NOV-15-046	11/20/2015	1100	BWECKWORT	L	G	2.4		R														X

Comments:

Sample ID	Container No	Comment

ACTION	BY	DATE/TIME
INITIATED:	Bruce Weckworth - TSD	11/20/2015 17:38
CUSTODY:		
RECEIVED:	Jeremy Spruill- Lab Tech	11/21/2015 7:05

Dameron, Jason (DEQ)

From: Timothy Castillo [TCastillo@rivanna.org]
Sent: Wednesday, December 02, 2015 4:40 PM
To: Dameron, Jason (DEQ)
Subject: RE: Moores Creek AWRRF - VA0025518
Attachments: 110615 - RV_MC_FNE.pdf; 101615 - RV_MC_FNE.pdf; 103015 - RV_MC_FNE.pdf

Jason,

Attached please find sample results for Part D Expanded Effluent Testing Data. Samples were taken on 10/16/15, 10/30/15, 11/06/15 (Organics sampler failed on 10/30) and 11/20/15.
I am still awaiting the results from the 11/20 sampling event. I wanted to provide you with what I have received thus far and will forward the final set of data when I receive it.

Thanks for your help on this.

Tim

RIVANNA
WATER & SEWER AUTHORITY

Timothy E. Castillo
Wastewater Manager
Rivanna Water & Sewer Authority
695 Moores Creek Lane
Charlottesville, Va 22902
434-977-2970 Ext 112

From: Dameron, Jason (DEQ) [mailto:Jason.Dameron@deq.virginia.gov]
Sent: Tuesday, November 17, 2015 2:20 PM
To: Timothy Castillo <TCastillo@rivanna.org>
Subject: RE: Moores Creek AWRRF - VA0025518

Tim,

Your application has been received and reviewed. At this point, the only deficiency that I see is with the lack of Part D Expanded Effluent Testing Data, as we discussed prior to submittal of the application. Once that additional informational is received, we should be able to deem the application complete. Please let me know if you have any trouble meeting the December timeline that you discussed in the cover letter. Also, let me know if you have any questions or need anything.

Thanks!

Jason

From: Timothy Castillo [mailto:TCastillo@rivanna.org]
Sent: Tuesday, November 10, 2015 12:17 PM
To: Dameron, Jason (DEQ)
Cc: Ferguson-Davie, Linda (DEQ)
Subject: Moores Creek AWRRF - VA0025518

Jason,

Attached, please find the 2-15 Toxicity Testing results for Moores Creek AWRRF – VA0025518 as required under the VPDES permit. This was also sent with the VPDES application package previously. Please let me know if you need anything further.

Tim

RIVANNA
WATER & SEWER AUTHORITY

Timothy E. Castillo
Wastewater Manager
Rivanna Water & Sewer Authority
695 Moores Creek Lane
Charlottesville, Va 22902
434-977-2970 Ext 112

HRSD
Cleaning wastewater every day for a better Bay.
1432 Air Rail Avenue, Virginia Beach, VA 23455-3002 • 757.460.4205 • Fax: 757.460.6586 • www.hrsd.com

11/06/15 - Rivanna - MC-FNE

This analytical report contains 8 pages

Stuart Wilson
Rivanna Water & Sewer Authority
695 Moore's Creek Lane
Charlottesville, VA 22902

swilson@rivanna.org

Date Sent: **11/30/15**

HRSD CEL, Central Environmental Laboratory is VELAP/NELAC accredited by DCLS, the Division of Consolidated Laboratory Services.

VA Laboratory ID#: 460011

Analytical test results meet all requirements of VELAP/NELAC unless otherwise noted under the analysis.

Test results relate only to the sample tested. Clients should be aware that a critical step in chemical or microbiological analysis is the collection of the sample.

This report may not be reproduced, except in full, without written approval from HRSD.

If you have any questions concerning this report, please do not hesitate to contact Robin Parnell, CEL Laboratory Manager at (757) 460-4203.
rparnell@hrsd.com
Kim Fordyce, CEL Administrative Assistant at (757) 460-4205.
kfordyce@hrsd.com

CENTRAL ENVIRONMENTAL LABORATORY ANALYTICAL REPORT

VA Laboratory ID 460011

HRSD

Job ID: RV-6-NOV-15-022

Report Serial No.: 2015-2535

Sample ID: RV_MC_FNE-C-110615-1
Sample Date: 11/6/2015
Customer Sample ID: Rivanna Water and Sewer Authority - Moores Creek WWTP - FNE
Sample ID: 465850
Sample Sub-Type: SAMP

Analyte	Method	CAS#	Unit	Result	Flag	LOQ	Analyst	Analysis Date	Analysis Time
1,2,4-Trichlorobenzene	EPA 625	120-82-1	ug/l	<10.0		10.0	IGERASIMOV	11/19/15	09:15
1,2-Diphenylhydrazine	EPA 625	122-66-7	ug/l	<10.0	IA1	10.0	IGERASIMOV	11/19/15	09:15
1,2-Diphenylhydrazine is converted to Azobenzene in the extraction process.									
2,4,6-Trichlorophenol	EPA 625	88-06-2	ug/l	<10.0	IA1	10.0	IGERASIMOV	11/19/15	09:15
2,4-Dichlorophenol	EPA 625	120-83-2	ug/l	<10.0		10.0	IGERASIMOV	11/19/15	09:15
2,4-Dimethylphenol	EPA 625	105-67-9	ug/l	<10.0		10.0	IGERASIMOV	11/19/15	09:15
2,4-Dinitrophenol	EPA 625	51-28-5	ug/l	<10.0	IA1	10.0	IGERASIMOV	11/19/15	09:15
2,4-DNT	EPA 625	121-14-2	ug/l	<10.0		10.0	IGERASIMOV	11/19/15	09:15
2,6-DNT	EPA 625	606-20-2	ug/l	<10.0	IA1	10.0	IGERASIMOV	11/19/15	09:15
2-Chloronaphthalene	EPA 625	91-58-7	ug/l	<10.0		10.0	IGERASIMOV	11/19/15	09:15
2-Nitrophenol	EPA 625	88-75-5	ug/l	<10.0		10.0	IGERASIMOV	11/19/15	09:15
3,3-Dichlorobenzidine	EPA 625	91-94-1	ug/l	<10.0		10.0	IGERASIMOV	11/19/15	09:15
4,6-Dinitro-o-Cresol	EPA 625	534-52-1	ug/l	<10.0	IA1	10.0	IGERASIMOV	11/19/15	09:15
4-Bromophenyl phenyl ether	EPA 625	101-55-3	ug/l	<10.0	IA1	10.0	IGERASIMOV	11/19/15	09:15
4-Chloro-m-cresol	EPA 625	59-50-7	ug/l	<10.0	IA1	10.0	IGERASIMOV	11/19/15	09:15
4-Chlorophenyl phenyl ether	EPA 625	7005-72-3	ug/l	<10.0		10.0	IGERASIMOV	11/19/15	09:15
4-Nitrophenol	EPA 625	100-02-7	ug/l	<10.0	IA1	10.0	IGERASIMOV	11/19/15	09:15
Acenaphthene	EPA 625	83-32-9	ug/l	<10.0		10.0	IGERASIMOV	11/19/15	09:15

Notes

LOQ is lowest concentration at which quantitation is demonstrated.
*Analyte is not included in the HRSD CEL VELAP scope of accreditation

IA1 - Quality control data outside of acceptance limits

Print Date: 11/30/2015

CENTRAL ENVIRONMENTAL LABORATORY ANALYTICAL REPORT

VA Laboratory ID 460011

HRSD

Job ID: RV-6-NOV-15-022

Report Serial No.: 2015-2535

Sample ID: RV_MC_FNE-C-110615-1
Sample Date: 11/6/2015
Customer Sample ID: Rivanna Water and Sewer Authority - Moores Creek WWTP - FNE
Sample ID: 465850
Sample Sub-Type: SAMP

Analyte	Method	CAS#	Unit	Result	Flag	LOQ	Analyst	Analysis Date	Analysis Time
Acenaphthylene	EPA 625	208-96-8	ug/l	<10.0		10.0	IGERASIMOV	11/19/15	09:15
Anthracene	EPA 625	120-12-7	ug/l	<10.0		10.0	IGERASIMOV	11/19/15	09:15
Benzidine	EPA 625	92-87-5	ug/l	<10.0		10.0	IGERASIMOV	11/13/15	05:46
Benzo(a) anthracene	EPA 625	56-55-3	ug/l	<10.0		10.0	IGERASIMOV	11/19/15	09:15
Benzo(a) pyrene	EPA 625	50-32-8	ug/l	<10.0		10.0	IGERASIMOV	11/19/15	09:15
Benzo(b) fluoranthene	EPA 625	205-99-2	ug/l	<10.0		10.0	IGERASIMOV	11/19/15	09:15
Benzo(ghi) perylene	EPA 625	191-24-2	ug/l	<10.0		10.0	IGERASIMOV	11/19/15	09:15
Benzo(k) fluoranthene	EPA 625	207-08-9	ug/l	<10.0		10.0	IGERASIMOV	11/19/15	09:15
Bis(2-chloroethoxy) methane	EPA 625	111-91-1	ug/l	<10.0		10.0	IGERASIMOV	11/19/15	09:15
Bis(2-chloroethyl) ether	EPA 625	111-44-4	ug/l	<10.0		10.0	IGERASIMOV	11/19/15	09:15
Bis(2-chloroisopropyl) ether	EPA 625	108-60-1	ug/l	<10.0		10.0	IGERASIMOV	11/19/15	09:15
Butylbenzylphthalate	EPA 625	85-68-7	ug/l	<10.0		10.0	IGERASIMOV	11/19/15	09:15
Chrysene	EPA 625	218-01-9	ug/l	<10.0		10.0	IGERASIMOV	11/19/15	09:15
Di(2-ethylhexyl)phthalate	EPA 625	117-81-7	ug/l	<10.0		10.0	IGERASIMOV	11/19/15	09:15
Dibenzo (ah) anthracene	EPA 625	53-70-3	ug/l	<10.0		10.0	IGERASIMOV	11/19/15	09:15
Diethyl phthalate	EPA 625	84-66-2	ug/l	<10.0		10.0	IGERASIMOV	11/19/15	09:15
Dimethyl phthalate	EPA 625	131-11-3	ug/l	<10.0	IA1	10.0	IGERASIMOV	11/19/15	09:15
Di-n-butyl phthalate	EPA 625	84-74-2	ug/l	<10.0	IA1	10.0	IGERASIMOV	11/19/15	09:15

Notes

LOQ is lowest concentration at which quantitation is demonstrated.
*Analyte is not included in the HRSD CEL VELAP scope of accreditation

IA1 - Quality control data outside of acceptance limits

Print Date: 11/30/2015

CENTRAL ENVIRONMENTAL LABORATORY ANALYTICAL REPORT

VA Laboratory ID 460011

HRSD

Job ID: RV-6-NOV-15-022

Report Serial No.: 2015-2535

Sample ID: RV_MC_FNE-C-110615-1
Sample Date: 11/6/2015
Customer Sample ID: Rivanna Water and Sewer Authority - Moores Creek WWTP - FNE
Sample ID: 465850
Sample Sub-Type: SAMP

Analyte	Method	CAS#	Unit	Result	Flag	LOQ	Analyst	Analysis Date	Analysis Time
Di-n-octyl phthalate	EPA 625	117-84-0	ug/l	<10.0		10.0	IGERASIMOV	11/19/15	09:15
Fluoranthene	EPA 625	206-44-0	ug/l	<10.0		10.0	IGERASIMOV	11/19/15	09:15
Fluorene	EPA 625	86-73-7	ug/l	<10.0		10.0	IGERASIMOV	11/19/15	09:15
Hexachlorobenzene	EPA 625	118-74-1	ug/l	<10.0	IA1	10.0	IGERASIMOV	11/19/15	09:15
Hexachlorobutadiene	EPA 625	87-68-3	ug/l	<10.0		10.0	IGERASIMOV	11/19/15	09:15
Hexachlorocyclopentadiene	EPA 625	77-47-4	ug/l	<10.0		10.0	IGERASIMOV	11/19/15	09:15
Hexachloroethane	EPA 625	67-72-1	ug/l	<10.0		10.0	IGERASIMOV	11/19/15	09:15
Indeno (1,2,3-cd) pyrene	EPA 625	193-39-5	ug/l	<10.0		10.0	IGERASIMOV	11/19/15	09:15
Isophorone	EPA 625	78-59-1	ug/l	<10.0		10.0	IGERASIMOV	11/19/15	09:15
Naphthalene	EPA 625	91-20-3	ug/l	<10.0		10.0	IGERASIMOV	11/19/15	09:15
Nitrobenzene	EPA 625	98-95-3	ug/l	<10.0		10.0	IGERASIMOV	11/19/15	09:15
n-Nitrosodimethylamine	EPA 625	62-75-9	ug/l	<10.0		10.0	IGERASIMOV	11/19/15	09:15
n-Nitrosodi-n-Propylamine	EPA 625	621-64-7	ug/l	<10.0		10.0	IGERASIMOV	11/19/15	09:15
n-Nitrosodiphenylamine	EPA 625	86-30-6	ug/l	<10.0		10.0	IGERASIMOV	11/19/15	09:15
n-Nitrosodiphenylamine is converted to Diphenylamine in the injection port.									
o-Chlorophenol	EPA 625	95-57-8	ug/l	<10.0		10.0	IGERASIMOV	11/19/15	09:15
Pentachlorophenol	EPA 625	87-86-5	ug/l	<10.0		10.0	IGERASIMOV	11/19/15	09:15
Phenanthrene	EPA 625	85-01-8	ug/l	<10.0		10.0	IGERASIMOV	11/19/15	09:15

Notes

LOQ is lowest concentration at which quantitation is demonstrated.
*Analyte is not included in the HRSD CEL VELAP scope of accreditation.

IA1 - Quality control data outside of acceptance limits

Print Date: 11/30/2015

CENTRAL ENVIRONMENTAL LABORATORY ANALYTICAL REPORT

VA Laboratory ID 460011

HRSD

Job ID: RV-6-NOV-15-022

Report Serial No.: 2015-2535

Sample ID: RV_MC_FNE-C-110615-1
Sample Date: 11/6/2015
Customer Sample ID: Rivanna Water and Sewer Authority - Moores Creek WWTP - FNE
Sample ID: 465850
Sample Sub-Type: SAMP

Analyte	Method	CAS#	Unit	Result	Flag	LOQ	Analyst	Analysis Date	Analysis Time
Phenol	EPA 625	108-95-2	ug/l	<10.0		10.0	IGERASIMOV	11/19/15	09:15
Pyrene	EPA 625	129-00-0	ug/l	<10.0		10.0	IGERASIMOV	11/19/15	09:15

Notes

LOQ is lowest concentration at which quantitation is demonstrated.
*Analyte is not included in the HRSD CEL VELAP scope of accreditation

CENTRAL ENVIRONMENTAL LABORATORY ANALYTICAL REPORT

VA Laboratory ID 460011

HRSD

Job ID: RV-6-NOV-15-022

Report Serial No.: 2015-2535

Sample ID: RV_MC_FNE-G-110615-1
Sample Date: 11/6/2015
Customer Sample ID: Rivanna Water and Sewer Authority - Moores Creek WWTP - FNE
Sample ID: 465851
Sample Sub-Type: SAMP

Analyte	Method	CAS#	Unit	Result	Flag	LOQ	Analyst	Analysis Date	Analysis Time
Phenol, Total	Lachat 10-210-00-1-B	108-95-2	mg/l	<0.05		0.05	AMOORE	11/10/15	12:25
1,1,1-Trichloroethane	EPA 624	71-55-6	ug/l	<10.0		10.0	DLO	11/09/15	15:32
1,1,2,2-Tetrachloroethane	EPA 624	79-34-5	ug/l	<10.0		10.0	DLO	11/09/15	15:32
1,1,2-Trichloroethane	EPA 624	79-00-5	ug/l	<10.0		10.0	DLO	11/09/15	15:32
1,1-Dichloroethane	EPA 624	75-34-3	ug/l	<10.0		10.0	DLO	11/09/15	15:32
1,1-Dichloroethylene	EPA 624	75-35-4	ug/l	<10.0		10.0	DLO	11/09/15	15:32
1,2-Dichlorobenzene	EPA 624	95-50-1	ug/l	<10.0		10.0	DLO	11/09/15	15:32
1,2-Dichloroethane	EPA 624	107-06-2	ug/l	<10.0		10.0	DLO	11/09/15	15:32
1,2-Dichloropropane	EPA 624	78-87-5	ug/l	<10.0		10.0	DLO	11/09/15	15:32
1,3-Dichlorobenzene	EPA 624	541-73-1	ug/l	<10.0		10.0	DLO	11/09/15	15:32
1,3-Dichloropropene (cis+trans)	EPA 624	10061-01-5/10061-02-	ug/l	<20.0		20.0	DLO	11/09/15	15:32
1,4-Dichlorobenzene	EPA 624	106-46-7	ug/l	<10.0		10.0	DLO	11/09/15	15:32
2-Chloroethyl Vinyl Ether	EPA 624	110-75-8	ug/l	<10.0		10.0	DLO	11/09/15	15:32
Acrolein	EPA 624	107-02-8	ug/l	<50.0		50.0	DLO	11/09/15	12:36
Acrylonitrile	EPA 624	107-13-1	ug/l	<10.0		10.0	DLO	11/09/15	15:32
Benzene	EPA 624	71-43-2	ug/l	<10.0		10.0	DLO	11/09/15	15:32
Bromodichloromethane	EPA 624	75-27-4	ug/l	<10.0		10.0	DLO	11/09/15	15:32

Notes

LOQ is lowest concentration at which quantitation is demonstrated.
*Analyte is not included in the HRSD CEL VELAP scope of accreditation

CENTRAL ENVIRONMENTAL LABORATORY ANALYTICAL REPORT

VA Laboratory ID 460011

HRSD

Job ID: RV-6-NOV-15-022

Report Serial No.: 2015-2535

Sample ID: RV_MC_FNE-G-110615-1
Sample Date: 11/6/2015
Customer Sample ID: Rivanna Water and Sewer Authority - Moores Creek WWTP - FNE
Sample ID: 465851
Sample Sub-Type: SAMP

Analyte	Method	CAS#	Unit	Result	Flag	LOQ	Analyst	Analysis Date	Analysis Time
Bromoform	EPA 624	75-25-2	ug/l	<10.0		10.0	DLO	11/09/15	15:32
Bromomethane	EPA 624	74-83-9	ug/l	<10.0		10.0	DLO	11/09/15	15:32
Carbon Tetrachloride	EPA 624	56-23-5	ug/l	<10.0		10.0	DLO	11/09/15	15:32
Chlorobenzene	EPA 624	108-90-7	ug/l	<10.0		10.0	DLO	11/09/15	15:32
Chlorodibromomethane	EPA 624	124-48-1	ug/l	<10.0		10.0	DLO	11/09/15	15:32
Chloroethane	EPA 624	75-00-3	ug/l	<10.0		10.0	DLO	11/09/15	15:32
Chloroform	EPA 624	67-66-3	ug/l	<10.0		10.0	DLO	11/09/15	15:32
Chloromethane	EPA 624	74-87-3	ug/l	<10.0		10.0	DLO	11/09/15	15:32
cis-1,3-Dichloropropene	EPA 624	10061-01-5	ug/l	<10.0		10.0	DLO	11/09/15	15:32
Ethylbenzene	EPA 624	100-41-4	ug/l	<10.0		10.0	DLO	11/09/15	15:32
Methylene Chloride	EPA 624	75-09-2	ug/l	<10.0		10.0	DLO	11/09/15	15:32
Tetrachloroethene	EPA 624	127-18-4	ug/l	<10.0		10.0	DLO	11/09/15	15:32
Toluene	EPA 624	108-88-3	ug/l	<10.0		10.0	DLO	11/09/15	15:32
trans-1,2-Dichloroethene	EPA 624	156-60-5	ug/l	<10.0		10.0	DLO	11/09/15	15:32
trans-1,3-Dichloropropene	EPA 624	10061-02-6	ug/l	<10.0		10.0	DLO	11/09/15	15:32
Trichloroethylene	EPA 624	79-01-6	ug/l	<10.0		10.0	DLO	11/09/15	15:32
Vinyl Chloride	EPA 624	75-01-4	ug/l	<10.0		10.0	DLO	11/09/15	15:32

Notes

LOQ is lowest concentration at which quantitation is demonstrated.
*Analyte is not included in the HRSD CEL VELAP scope of accreditation

Authorized By: Li Zhang - Lab Manager

Date Authorized: 11/30/2015

Print Date: 11/30/2015

HRSD
Cleaning wastewater every day for a better Bay.

CENTRAL ENVIRONMENT LABORATORY
1432 AIR RAIL AVENUE
VIRGINIA BEACH, VA 23455
TEL: 757-460-4214
FAX: 757-460-6586

CHAIN OF CUSTODY

COC ID: 22292 COC NAME: RV_11/06/15 15:48

Sample ID	Container No	Job Name	Date	Time	Sampler Id	Matrix	Type	Samp Temp oC	Preservation	Status	PHNL_F8	EMIVOL62	VOC624
RV_MC_FNE-C-110615-1	C280545	RV-6-NOV-15-022	11/06/2015	1145	BWECKWORTH	L	C	3.5	.	R		x	
	C280544	RV-6-NOV-15-022	11/06/2015	1145	BWECKWORTH	L	C	3.3	.	R		x	
	C280543	RV-6-NOV-15-022	11/06/2015	1145	BWECKWORTH	L	C	3.9	.	R		x	
	C280542	RV-6-NOV-15-022	11/06/2015	1145	BWECKWORTH	L	C	5.0	.	R		x	
	C280541	RV-6-NOV-15-022	11/06/2015	1145	BWECKWORTH	L	C	3.7	.	R		x	
	C280540	RV-6-NOV-15-022	11/06/2015	1145	BWECKWORTH	L	C	3.6	.	R		x	
	C280539	RV-6-NOV-15-022	11/06/2015	1145	BWECKWORTH	L	C	3.4	.	R		x	
	C280538	RV-6-NOV-15-022	11/06/2015	1145	BWECKWORTH	L	C	5.9	.	R		x	
RV_MC_FNE-G-110615-1	C280553	RV-6-NOV-15-022	11/06/2015	1115	BWECKWORTH	L	G	10.5	.	R			x
	C280552	RV-6-NOV-15-022	11/06/2015	1115	BWECKWORTH	L	G	10.3	.	R			x
	C280551	RV-6-NOV-15-022	11/06/2015	1115	BWECKWORTH	L	G	9.2	.	R			x
	C280550	RV-6-NOV-15-022	11/06/2015	1115	BWECKWORTH	L	G	10.0	.	R			x
	C280549	RV-6-NOV-15-022	11/06/2015			L	G	10.1	.	R			x
	C280548	RV-6-NOV-15-022	11/06/2015	1115	BWECKWORTH	L	G	10.0	.	R			x
	C280547	RV-6-NOV-15-022	11/06/2015	1115	BWECKWORTH	L	G	10.6	.	R			x
	C280546	RV-6-NOV-15-022	11/06/2015	1115	BWECKWORTH	L	G	9.4	.	R			x
	C280538	RV-6-NOV-15-022	11/06/2015	1115	BWECKWORTH	L	G	5.8	pH < 2	R	x		
	C280537	RV-6-NOV-15-022	11/06/2015	1115	BWECKWORTH	L	G	8.9	.	R			x

Comments:

Sample ID	Container No	Comment

ACTION	BY	DATE/TIME
INITIATED:	Bruce Weckworth - TSD	11/6/2015 3:44:30 PM
CUSTODY:		
RECEIVED:	Edwin Strange - Specialist	11/6/2015 4:13:24 PM

FIELD RECORD (S)

Rivanna Moores Creek VPDES Field Sheet

Information To Be Checked Before The Start of Each Sampling Event

1. Does the Final Effluent have any abnormal characteristics (odor, color)? Y / N

If the answer to the above questions is NO proceed to the next section. Please contact a supervisor if the answer is YES.

2. A. Average Plant flow for the last five days: 10.5
   B. Expected Plant flow for the next 24 hours: 10

3. List the last three days of Final Effluent TSS with the most recent last: _____, _____, _____

4. Contact Closure: (Expected Flow / 10000 / 32) 8 Pulses per sample.

5. Samplers for Final Effluent & FB calibrated at 250 ml per sample. (Desired volume/10000/32)
   Final Effluent Start Time / Date: 11/5/15 @ 1145 Calibrated to: 250
   FB Start Time / Date: 11/5/15 @ 1145 Calibrated to: 250

The above information has been completed prior to the beginning of the sampling event. Int. BGW

Sampling personnel: B. Weckworth, S. Musgrove, _____

Information Check At The End Of The Sampling Event

1. Are all lids, compression assemblies and caps secure? Y / N
2. Final Effluent TSS for the sampling period: _____
3. Plant flow for the sampling period _____
4. Number of samples collected in each Final Effluent & FB composite container:
   Final Effluent: 32
   FB: N/A
5. Final Effluent & FB composite end time and date:
   Final Effluent End Time / Date: 11/6/15 @ 1145
   FB End Time / Date: N/A
6. Is Temperature in collection container at the end of sampling <6° C? Y / N
7. Are sample volumes equal in all composite containers? Y / N / N/A
8. Grab times and dates:
   FB VOA: N/A FNE VOA: 1115
   Oil & Grease: N/A Cyanide: N/A
   Total Phenol: 1115

Sampling personnel: B. Weckworth, S. Musgrove, _____

Please contact project lead with any problems incurred during the sampling event.

Record any other information that could affect sample results:

This was a resample for Organics, 624, and T. phenol.

Rivanna Moores Creek VPDES Field Sheet

Information To Be Checked Before The Start of Each Sampling Event

1. Does the Final Effluent have any abnormal characteristics (odor, color)? Y / N

If the answer to the above questions is NO proceed to the next section. Please contact a supervisor if the answer is YES.

2. A. Average Plant flow for the last five days: 11
   B. Expected Plant flow for the next 24 hours: 16

3. List the last three days of Final Effluent TSS with the most recent last: _____, _____, _____

4. Contact Closure: (Expected Flow / 10000 /) 11 Pulses per sample.

5. Samplers for Final Effluent & FB calibrated at 250 ml per sample. (Desired volume/10000/32)
   Final Effluent Start Time / Date: 11/19/15 @ 1150 Calibrated to: 250
   FB Start Time / Date: 11/14/15 @ 1150 Calibrated to: 250

The above information has been completed prior to the beginning of the sampling event. Int. BW

Sampling personnel: B. Wadsworth, J. Jackson, _____

Information Check At The End Of The Sampling Event

1. Are all lids, compression assemblies and caps secure? Y / N
2. Final Effluent TSS for the sampling period: _____
3. Plant flow for the sampling period _____
4. Number of samples collected in each Final Effluent & FB composite container:
   Final Effluent: 32
   FB: 32
5. Final Effluent & FB composite end time and date:
   Final Effluent End Time / Date: 11/20/15 @ 1150
   FB End Time / Date: 11/20/15 @ 1150
6. Is Temperature in collection container at the end of sampling <6° C? Y / N
7. Are sample volumes equal in all composite containers? Y / N
8. Grab times and dates:
   FB VOA: N/A
   Oil & Grease: 11/20/15 @ 1100
   Total Phenol: 11/20/15 @ 1100
   FNE VOA: 11/20/15 @ 1100
   Cyanide: 11/20/15 @ 1100

Sampling personnel: B. Wadsworth, S. Musgrove, _____

Please contact project lead with any problems incurred during the sampling event.

Record any other information that could affect sample results:

HRSD
Cleaning wastewater every day for a better Bay.
1432 Air Rail Avenue, Virginia Beach, VA 23455-3002 • 757.460.4205 • Fax: 757.460.6586 • www.hrsd.com

10/16/15 - Rivanna - MC-FNE

This analytical report contains 13 pages

Stuart Wilson
Rivanna Water & Sewer Authority
695 Moore's Creek Lane
Charlottsville, VA 22902

swilson@rivanna.org

Date Sent: **11/02/15**

HRSD CEL, Central Environmental Laboratory is VELAP/NELAC accredited by DCLS, the Division of Consolidated Laboratory Services.

VA Laboratory ID#: 460011

Analytical test results meet all requirements of VELAP/NELAC unless otherwise noted under the analysis.

Test results relate only to the sample tested. Clients should be aware that a critical step in chemical or microbiological analysis is the collection of the sample.

This report may not be reproduced, except in full, without written approval from HRSD.

If you have any questions concerning this report, please do not hesitate to contact Robin Parnell, CEL Laboratory Manager at (757) 460-4203.
rparnell@hrsd.com
Kim Fordyce, CEL Administrative Assistant at (757) 460-4205.
kfordyce@hrsd.com

CENTRAL ENVIRONMENTAL LABORATORY ANALYTICAL REPORT

VA Laboratory ID 460011

HRSD

Job ID: RV-16-OCT-15-970

Report Serial No.: 2015-2344

Sample ID: RV_MC_FB-C-101615-1
Sample Date: 10/16/2015
Customer Sample ID: Rivanna Water and Sewer Authority - Moores Creek WWTP - Field Blank
Sample ID: 456313
Sample Sub-Type: FB

Analyte	Method	CAS#	Unit	Result	Flag	LOQ	Analyst	Analysis Date	Analysis Time
Mercury, Dissolved	EPA 245.1	92786-62-4	ug/l	<0.10		0.10	BSTAPLES	10/21/15	15:11
Antimony, Dissolved	EPA 200.8, Rev. 5.4	7440-36-0	ug/l	<1.00		1.00	KWILLIAMS	10/27/15	12:19
Arsenic, Dissolved	EPA 200.8, Rev. 5.4	7440-38-2	ug/l	<0.50		0.50	KWILLIAMS	10/27/15	12:19
Beryllium, Dissolved	EPA 200.8, Rev. 5.4	7440-41-7	ug/l	<0.10		0.10	KWILLIAMS	10/27/15	12:19
Cadmium, Dissolved	EPA 200.8, Rev. 5.4	7440-43-9	ug/l	<0.05		0.05	KWILLIAMS	10/27/15	12:19
Chromium, Total	EPA 200.8, Rev. 5.4	7440-47-3	ug/l	<1.0		1.0	KWILLIAMS	10/27/15	12:13
Copper, Dissolved	EPA 200.8, Rev. 5.4	7440-50-8	ug/l	<0.50		0.50	KWILLIAMS	10/27/15	12:19
Lead, Dissolved	EPA 200.8, Rev. 5.4	7439-92-1	ug/l	<0.10		0.10	KWILLIAMS	10/27/15	12:19
Nickel, Dissolved	EPA 200.8, Rev. 5.4	7440-02-0	ug/l	<0.50		0.50	KWILLIAMS	10/27/15	12:19
Selenium, Total	EPA 200.8, Rev. 5.4	7782-49-2	ug/l	<0.5		0.5	KWILLIAMS	10/27/15	12:13
Silver, Dissolved	EPA 200.8, Rev. 5.4	7440-22-4	ug/l	<0.20		0.20	KWILLIAMS	10/27/15	12:19
Thallium, Dissolved	EPA 200.8, Rev. 5.4	7440-28-0	ug/l	<0.50		0.50	KWILLIAMS	10/27/15	12:19
Zinc, Dissolved	EPA 200.8, Rev. 5.4	7440-66-6	ug/l	1.75		1.00	KWILLIAMS	10/27/15	12:19

Notes

LOQ is lowest concentration at which quantitation is demonstrated.
**Analyte is not included in the HRSD CEL VELAP scope of accreditation*

CENTRAL ENVIRONMENTAL LABORATORY ANALYTICAL REPORT

VA Laboratory ID 460011

HRSD

Job ID: RV-16-OCT-15-970

Report Serial No.: 2015-2344

Sample ID: RV_MC_FNE-C-101615-1
Sample Date: 10/16/2015
Customer Sample ID: Rivanna Water and Sewer Authority - Moores Creek WWTP - FNE
Sample ID: 456312
Sample Sub-Type: SAMP

Analyte	Method	CAS#	Unit	Result	Flag	LOQ	Analyst	Analysis Date	Analysis Time
Diazinon	EPA 622	00333-41-5	ug/l	<0.100		0.100	MBOGGIO	10/27/15	16:00
Hardness, Total	SM 2340B-2011	471-34-1	mg eq CaCO3/l	82.2		6.62	BSTAPLES	10/27/15	10:46
Mercury, Dissolved	EPA 245.1	92786-62-4	ug/l	<0.10		0.10	BSTAPLES	10/21/15	15:08
Antimony, Dissolved	EPA 200.8, Rev. 5.4	7440-36-0	ug/l	<1.00		1.00	KWILLIAMS	10/27/15	11:50
Arsenic, Dissolved	EPA 200.8, Rev. 5.4	7440-38-2	ug/l	<0.50		0.50	KWILLIAMS	10/27/15	11:50
Beryllium, Dissolved	EPA 200.8, Rev. 5.4	7440-41-7	ug/l	<0.10		0.10	KWILLIAMS	10/27/15	11:50
Cadmium, Dissolved	EPA 200.8, Rev. 5.4	7440-43-9	ug/l	<0.05		0.05	KWILLIAMS	10/27/15	14:37
Chromium, Total	EPA 200.8, Rev. 5.4	7440-47-3	ug/l	<1.0		1.0	KWILLIAMS	10/27/15	12:07
Copper, Dissolved	EPA 200.8, Rev. 5.4	7440-50-8	ug/l	1.09		0.50	KWILLIAMS	10/27/15	11:50
Lead, Dissolved	EPA 200.8, Rev. 5.4	7439-92-1	ug/l	0.14		0.10	KWILLIAMS	10/27/15	11:50
Nickel, Dissolved	EPA 200.8, Rev. 5.4	7440-02-0	ug/l	1.68		0.50	KWILLIAMS	10/27/15	11:50
Selenium, Total	EPA 200.8, Rev. 5.4	7782-49-2	ug/l	<0.5		0.5	KWILLIAMS	10/27/15	12:07
Silver, Dissolved	EPA 200.8, Rev. 5.4	7440-22-4	ug/l	<0.20		0.20	KWILLIAMS	10/27/15	11:50
Thallium, Dissolved	EPA 200.8, Rev. 5.4	7440-28-0	ug/l	<0.50		0.50	KWILLIAMS	10/27/15	11:50
Zinc, Dissolved	EPA 200.8, Rev. 5.4	7440-66-6	ug/l	11.0		1.00	KWILLIAMS	10/27/15	11:50
Nonylphenol	ASTM D7065-06	84852-15-3	ug/l	<10.0		10.0	IGERASIMOV	10/24/15	16:19
1,2,4-Trichlorobenzene	EPA 625	120-82-1	ug/l	<10.0		10.0	IGERASIMOV	10/21/15	08:19

Notes

LOQ is lowest concentration at which quantitation is demonstrated.
**Analyte is not included in the HRSD CEL VELAP scope of accreditation*

CENTRAL ENVIRONMENTAL LABORATORY ANALYTICAL REPORT

VA Laboratory ID 460011

HRSD

Job ID: RV-16-OCT-15-970

Report Serial No.: 2015-2344

Sample ID: RV_MC_FNE-C-101615-1
Sample Date: 10/16/2015
Customer Sample ID: Rivanna Water and Sewer Authority - Moores Creek WWTP - FNE
Sample ID: 456312
Sample Sub-Type: SAMP

Analyte	Method	CAS#	Unit	Result	Flag	LOQ	Analyst	Analysis Date	Analysis Time
1,2-Diphenylhydrazine	EPA 625	122-66-7	ug/l	<10.0		10.0	IGERASIMOV	10/21/15	08:19
1,2-Diphenylhydrazine is converted to Azobenzene in the extraction process.									
2,4,6-Trichlorophenol	EPA 625	88-06-2	ug/l	<10.0		10.0	IGERASIMOV	10/21/15	08:19
2,4-Dichlorophenol	EPA 625	120-83-2	ug/l	<10.0		10.0	IGERASIMOV	10/21/15	08:19
2,4-Dimethylphenol	EPA 625	105-67-9	ug/l	<10.0		10.0	IGERASIMOV	10/21/15	08:19
2,4-Dinitrophenol	EPA 625	51-28-5	ug/l	<10.0		10.0	IGERASIMOV	10/21/15	08:19
2,4-DNT	EPA 625	121-14-2	ug/l	<10.0		10.0	IGERASIMOV	10/21/15	08:19
2,6-DNT	EPA 625	606-20-2	ug/l	<10.0		10.0	IGERASIMOV	10/21/15	08:19
2-Chloronaphthalene	EPA 625	91-58-7	ug/l	<10.0		10.0	IGERASIMOV	10/21/15	08:19
2-Nitrophenol	EPA 625	88-75-5	ug/l	<10.0		10.0	IGERASIMOV	10/21/15	08:19
3,3-Dichlorobenzidine	EPA 625	91-94-1	ug/l	<10.0		10.0	IGERASIMOV	10/21/15	08:19
4,6-Dinitro-o-Cresol	EPA 625	534-52-1	ug/l	<10.0		10.0	IGERASIMOV	10/21/15	08:19
4-Bromophenyl phenyl ether	EPA 625	101-55-3	ug/l	<10.0		10.0	IGERASIMOV	10/21/15	08:19
4-Chloro-m-cresol	EPA 625	59-50-7	ug/l	<10.0		10.0	IGERASIMOV	10/21/15	08:19
4-Chlorophenyl phenyl ether	EPA 625	7005-72-3	ug/l	<10.0		10.0	IGERASIMOV	10/21/15	08:19
4-Nitrophenol	EPA 625	100-02-7	ug/l	<10.0		10.0	IGERASIMOV	10/21/15	08:19
Acenaphthene	EPA 625	83-32-9	ug/l	<10.0		10.0	IGERASIMOV	10/21/15	08:19
Acenaphthylene	EPA 625	208-96-8	ug/l	<10.0		10.0	IGERASIMOV	10/21/15	08:19

Notes

LOQ is lowest concentration at which quantitation is demonstrated.
**Analyte is not included in the HRSD CEL VELAP scope of accreditation*

CENTRAL ENVIRONMENTAL LABORATORY ANALYTICAL REPORT

VA Laboratory ID 460011

HRSD

Job ID: RV-16-OCT-15-970

Report Serial No.: 2015-2344

Sample ID: RV_MC_FNE-C-101615-1
Sample Date: 10/16/2015
Customer Sample ID: Rivanna Water and Sewer Authority - Moores Creek WWTP - FNE
Sample ID: 456312
Sample Sub-Type: SAMP

Analyte	Method	CAS#	Unit	Result	Flag	LOQ	Analyst	Analysis Date	Analysis Time
Anthracene	EPA 625	120-12-7	ug/l	<10.0		10.0	IGERASIMOV	10/21/15	08:19
Benzidine	EPA 625	92-87-5	ug/l	<10.0		10.0	IGERASIMOV	10/21/15	09:51
Benzo(a) anthracene	EPA 625	56-55-3	ug/l	<10.0		10.0	IGERASIMOV	10/21/15	08:19
Benzo(a) pyrene	EPA 625	50-32-8	ug/l	<10.0		10.0	IGERASIMOV	10/21/15	08:19
Benzo(b) fluoranthene	EPA 625	205-99-2	ug/l	<10.0		10.0	IGERASIMOV	10/21/15	08:19
Benzo(ghi) perylene	EPA 625	191-24-2	ug/l	<10.0		10.0	IGERASIMOV	10/21/15	08:19
Benzo(k) fluoranthene	EPA 625	207-08-9	ug/l	<10.0		10.0	IGERASIMOV	10/21/15	08:19
Bis(2-chloroethoxy) methane	EPA 625	111-91-1	ug/l	<10.0		10.0	IGERASIMOV	10/21/15	08:19
Bis(2-chloroethyl) ether	EPA 625	111-44-4	ug/l	<10.0		10.0	IGERASIMOV	10/21/15	08:19
Bis(2-chloroisopropyl) ether	EPA 625	108-60-1	ug/l	<10.0		10.0	IGERASIMOV	10/21/15	08:19
Butylbenzylphthalate	EPA 625	85-68-7	ug/l	<10.0		10.0	IGERASIMOV	10/21/15	08:19
Chrysene	EPA 625	218-01-9	ug/l	<10.0		10.0	IGERASIMOV	10/21/15	08:19
Di(2-ethylhexyl)phthalate	EPA 625	117-81-7	ug/l	<10.0		10.0	IGERASIMOV	10/21/15	08:19
Dibenzo (ah) anthracene	EPA 625	53-70-3	ug/l	<10.0		10.0	IGERASIMOV	10/21/15	08:19
Diethyl phthalate	EPA 625	84-66-2	ug/l	<10.0		10.0	IGERASIMOV	10/21/15	08:19
Dimethyl phthalate	EPA 625	131-11-3	ug/l	<10.0		10.0	IGERASIMOV	10/21/15	08:19
Di-n-butyl phthalate	EPA 625	84-74-2	ug/l	<10.0		10.0	IGERASIMOV	10/21/15	08:19
Di-n-octyl phthalate	EPA 625	117-84-0	ug/l	<10.0		10.0	IGERASIMOV	10/21/15	08:19

Notes

LOQ is lowest concentration at which quantitation is demonstrated.
**Analyte is not included in the HRSD CEL VELAP scope of accreditation*

CENTRAL ENVIRONMENTAL LABORATORY ANALYTICAL REPORT

VA Laboratory ID 460011

HRSD

Job ID: RV-16-OCT-15-970

Report Serial No.: 2015-2344

Sample ID: RV_MC_FNE-C-101615-1
Sample Date: 10/16/2015
Customer Sample ID: Rivanna Water and Sewer Authority - Moores Creek WWTP - FNE
Sample ID: 456312
Sample Sub-Type: SAMP

Analyte	Method	CAS#	Unit	Result	Flag	LOQ	Analyst	Analysis Date	Analysis Time
Fluoranthene	EPA 625	206-44-0	ug/l	<10.0		10.0	IGERASIMOV	10/21/15	08:19
Fluorene	EPA 625	86-73-7	ug/l	<10.0		10.0	IGERASIMOV	10/21/15	08:19
Hexachlorobenzene	EPA 625	118-74-1	ug/l	<10.0		10.0	IGERASIMOV	10/21/15	08:19
Hexachlorobutadiene	EPA 625	87-68-3	ug/l	<10.0		10.0	IGERASIMOV	10/21/15	08:19
Hexachlorocyclopentadiene	EPA 625	77-47-4	ug/l	<10.0		10.0	IGERASIMOV	10/21/15	08:19
Hexachloroethane	EPA 625	67-72-1	ug/l	<10.0		10.0	IGERASIMOV	10/21/15	08:19
Indeno (1,2,3-cd) pyrene	EPA 625	193-39-5	ug/l	<10.0		10.0	IGERASIMOV	10/21/15	08:19
Isophorone	EPA 625	78-59-1	ug/l	<10.0		10.0	IGERASIMOV	10/21/15	08:19
Naphthalene	EPA 625	91-20-3	ug/l	<10.0		10.0	IGERASIMOV	10/21/15	08:19
Nitrobenzene	EPA 625	98-95-3	ug/l	<10.0		10.0	IGERASIMOV	10/21/15	08:19
n-Nitrosodimethylamine	EPA 625	62-75-9	ug/l	<10.0		10.0	IGERASIMOV	10/21/15	08:19
n-Nitrosodi-n-Propylamine	EPA 625	621-64-7	ug/l	<10.0		10.0	IGERASIMOV	10/21/15	08:19
n-Nitrosodiphenylamine	EPA 625	86-30-6	ug/l	<10.0		10.0	IGERASIMOV	10/21/15	08:19
n-Nitrosodiphenylamine is converted to Diphenylamine in the injection port.									
o-Chlorophenol	EPA 625	95-57-8	ug/l	<10.0		10.0	IGERASIMOV	10/21/15	08:19
Pentachlorophenol	EPA 625	87-86-5	ug/l	<10.0		10.0	IGERASIMOV	10/21/15	08:19
Phenanthrene	EPA 625	85-01-8	ug/l	<10.0		10.0	IGERASIMOV	10/21/15	08:19
Phenol	EPA 625	108-95-2	ug/l	<10.0		10.0	IGERASIMOV	10/21/15	08:19

Notes

LOQ is lowest concentration at which quantitation is demonstrated.
**Analyte is not included in the HRSD CEL VELAP scope of accreditation*

CENTRAL ENVIRONMENTAL
LABORATORY
ANALYTICAL REPORT
VA Laboratory ID 460011

HRSD

Job ID: RV-16-OCT-15-970

Report Serial No.: 2015-2344

Sample ID: RV_MC_FNE-C-101615-1
Sample Date: 10/16/2015
Customer Sample ID: Rivanna Water and Sewer Authority - Moores Creek WWTP - FNE
Sample ID: 456312
Sample Sub-Type: SAMP

Analyte	Method	CAS#	Unit	Result	Flag	LOQ	Analyst	Analysis Date	Analysis Time
Pyrene	EPA 625	129-00-0	ug/l	<10.0		10.0	IGERASIMOV	10/21/15	08:19
Total Dissolved Solids	SM 2540C, 2011		mg/l	309		1.0	MALCORN	10/20/15	15:41

Notes

LOQ is lowest concentration at which quantitation is demonstrated.
**Analyte is not included in the HRSD CEL VELAP scope of accreditation*

CENTRAL ENVIRONMENTAL LABORATORY ANALYTICAL REPORT

VA Laboratory ID 460011

HRSD

Job ID: RV-16-OCT-15-970

Report Serial No.: 2015-2344

Sample ID: RV_MC_FNE-G-101615-1
Sample Date: 10/16/2015
Customer Sample ID: Rivanna Water and Sewer Authority - Moores Creek WWTP - FNE
Sample ID: 456314
Sample Sub-Type: SAMP

Analyte	Method	CAS#	Unit	Result	Flag	LOQ	Analyst	Analysis Date	Analysis Time
Total Cyanide	Lachat 10-204-00-1X	74-90-8	mg/l	<0.01		0.01	AMOORE	10/30/15	15:05
HEM (Total Oil and Grease)	EPA 1664B		mg/l	<5.0		5.0	JCOOK	10/19/15	08:23
Phenol, Total	Lachat 10-210-00-1-B	108-95-2	mg/l	<0.05		0.05	ANROBERTS	10/23/15	08:23

Notes

LOQ is lowest concentration at which quantitation is demonstrated.
**Analyte is not included in the HRSD CEL VELAP scope of accreditation*

Authorized By: Robin Parnell - Lab Manager Robin Parnell

Date Authorized: 11/2/2015

HRSD

CENTRAL ENVIRONMENT LABORATORY
1432 AIR RAIL AVENUE
VIRGINIA BEACH, VA 23455
TEL: 757-460-4214
FAX: 757-460-6588

CHAIN OF CUSTODY

COC ID: 21845 COC NAME: RV_10/16/15 18:15

Sample ID	Container No	Job Name	Date	Time	Sampler Id	Matrix	Type	Samp Temp oC	Preservation	Status	CN_FIA	GC622	HARDNESS	HEM	HG_CVAA	ICP_200_7_A	ICPMS_200_8	NOX	PHNL_FIA	SEMIVOL_D7065	SEMIVOL_B25	TDS	TP	VOC624
RV_GM_FNE-C-101615-1	C275916	RV-16-OCT-15-969	10/16/2015	1030	BWECKWOR	L	C	5.3	pH < 2	R										x				
	C275915	RV-16-OCT-15-969	10/16/2015	1030	BWECKWOR	L	C	5.8	pH < 2	R										x				
	C275914	RV-16-OCT-15-969	10/16/2015	1030	BWECKWOR	L	C	4.7	pH < 2	R										x				
	C275913	RV-16-OCT-15-969	10/16/2015	1030	BWECKWOR	L	C	5.2	pH < 2	R										x				
	C275912	RV-16-OCT-15-969	10/16/2015	1030	BWECKWOR	L	C	4.8	.	R		x												
	C275911	RV-16-OCT-15-969	10/16/2015	1030	BWECKWOR	L	C	5.3	.	R		x												
	C275910	RV-16-OCT-15-969	10/16/2015	1030	BWECKWOR	L	C	4.8	.	R		x												
	C275909	RV-16-OCT-15-969	10/16/2015	1030	BWECKWOR	L	C	5.3	.	R		x												
	C275904	RV-16-OCT-15-969	10/16/2015	1030	BWECKWOR	L	C	2.5	.	R												x		
	C275903	RV-16-OCT-15-969	10/16/2015	1030	BWECKWOR	L	C	4.8	pH < 2	R										x				
	C275902	RV-16-OCT-15-969	10/16/2015	1030	BWECKWOR	L	C	5.2	.	R		x												
	C275901	RV-16-OCT-15-969	10/16/2015	1030	BWECKWOR	L	C	3.3	pH < 2	R								x					x	
RV_GM_FNE-G-101615-1	C275906	RV-16-OCT-15-969	10/16/2015	1050	BWECKWOR	L	G	4.1	.	R				x										
	C275907	RV-16-OCT-15-969	10/16/2015	1050	BWECKWOR	L	G	5.3	.	R				x										
	C275908	RV-16-OCT-15-969	10/16/2015	1050	BWECKWOR	L	G	4.7	.	R				x										
	C275905	RV-16-OCT-15-969	10/16/2015	1050	BWECKWOR	L	G	4.2	.	R				x										
RV_MC_FB-C-101615-1	C275924	RV-16-OCT-15-970	10/16/2015	1400	BWECKWOR	L	C	.	.	R					x		x							
	C275923	RV-16-OCT-15-970	10/16/2015	1400	BWECKWOR	L	C	.	.	R							x							
RV_MC_FNE-C-101615-1	C275955	RV-16-OCT-15-970	10/16/2015	1400	BWECKWOR	L	C	5.3	pH < 2	R										x				
	C275954	RV-16-OCT-15-970	10/16/2015	1400	BWECKWOR	L	C	4.8	pH < 2	R										x				
	C275952	RV-16-OCT-15-970	10/16/2015	1400	BWECKWOR	L	C	4.2	.	R		x												
	C275951	RV-16-OCT-15-970	10/16/2015	1400	BWECKWOR	L	C	4.7	.	R											x			
	C275950	RV-16-OCT-15-970	10/16/2015	1400	BWECKWOR	L	C	4.9	.	R											x			
	C275949	RV-16-OCT-15-970	10/16/2015	1400	BWECKWOR	L	C	3.8	.	R											x			
	C275948	RV-16-OCT-15-970	10/16/2015	1400	BWECKWOR	L	C	5.3	.	R											x			
	C275947	RV-16-OCT-15-970	10/16/2015	1400	BWECKWOR	L	C	4.9	.	R											x			
	C275946	RV-16-OCT-15-970	10/16/2015	1400	BWECKWOR	L	C	5.1	.	R											x			
	C275945	RV-16-OCT-15-970	10/16/2015	1400	BWECKWOR	L	C	4.0	.	R											x			
	C275944	RV-16-OCT-15-970	10/16/2015	1400	BWECKWOR	L	C	3.9	.	R											x			
	C275943	RV-16-OCT-15-970	10/16/2015	1400	BWECKWOR	L	C	3.6	.	R											x			
	C275942	RV-16-OCT-15-970	10/16/2015	1400	BWECKWOR	L	C	4.3	.	R											x			
	C275922	RV-16-OCT-15-970	10/16/2015	1400	BWECKWOR	L	C	2.8	.	R												x		
	C275920	RV-16-OCT-15-970	10/16/2015	1400	BWECKWOR	L	C	5.7	.	R		x												
	C275919	RV-16-OCT-15-970	10/16/2015	1400	BWECKWOR	L	C	4.2	.	R											x			
	C275918	RV-16-OCT-15-970	10/16/2015	1400	BWECKWOR	L	C	.	.	R					x		x							
	C275917	RV-16-OCT-15-970	10/16/2015	1400	BWECKWOR	L	C	.	.	R			x			x	x							
RV_MC_FNE-G-101615-1	C275939	RV-16-OCT-15-970	10/16/2015	1250	BWECKWOR	L	G	5.2	.	R				x										
	C275938	RV-16-OCT-15-970	10/16/2015	1250	BWECKWOR	L	G	5.8	.	R				x										
	C275937	RV-16-OCT-15-970	10/16/2015	1250	BWECKWOR	L	G	5.8	.	R				x										
	C275936	RV-16-OCT-15-970	10/16/2015	1230	BWECKWOR	L	G	5.9	.	R														x
	C275935	RV-16-OCT-15-970	10/16/2015	1230	BWECKWOR	L	G	5.8	.	R														x
	C275934	RV-16-OCT-15-970	10/16/2015	1230	BWECKWOR	L	G	5.4	.	R														x
	C275933	RV-16-OCT-15-970	10/16/2015	1230	BWECKWOR	L	G	5.8	.	R														x
	C275932	RV-16-OCT-15-970	10/16/2015	1230	BWECKWOR	L	G	4.7	.	R														x
	C275931	RV-16-OCT-15-970	10/16/2015	1230	BWECKWOR	L	G	5.8	.	R														x
	C275930	RV-16-OCT-15-970	10/16/2015	1230	BWECKWOR	L	G	5.8	.	R														x
	C275929	RV-16-OCT-15-970	10/16/2015	1230	BWECKWOR	L	G	5.7	.	R														x
	C275928	RV-16-OCT-15-970	10/16/2015	1250	BWECKWOR	L	G	5.4	.	R				x										
	C275927	RV-16-OCT-15-970	10/16/2015	1230	BWECKWOR	L	G	2.9	pH > 10	R	x													
	C275926	RV-16-OCT-15-970	10/16/2015	1245	BWECKWOR	L	G	4.3	pH < 2	R									x					
	C275925	RV-16-OCT-15-970	10/16/2015	1230	BWECKWOR	L	G	4.2	.	R														x

Comments:

Sample ID	Container No	Comment

ACTION	BY	DATE/TIME
INITIATED:	Bruce Weckworth - TSD	10/16/2015 18:03
CUSTODY:		
RECEIVED:	Edwin Strange - Specialist	10/19/2015 9:32

SUBCONTRACTED DATA

CENTRAL ENVIRONMENTAL LABORATORY ANALYTICAL REPORT

VA Laboratory ID 460011

HRSD

Job ID: RV-30-OCT-15-003

Report Serial No.: 2015-2521

Sample ID: RV_MC_FNE-C-103015-1
Sample Date: 10/30/2015
Customer Sample ID: Rivanna Water and Sewer Authority - Moores Creek WWTP - FNE
Sample ID: 462597
Sample Sub-Type: SAMP

Analyte	Method	CAS#	Unit	Result	Flag	LOQ	Analyst	Analysis Date	Analysis Time
Hardness, Total	SM 2340B-2011	471-34-1	mg eq CaCO3/l	70.2		6.62	SLABOCKI	11/09/15	15:15
Mercury, Dissolved	EPA 245.1	92786-62-4	ug/l	<0.10		0.10	BSTAPLES	11/06/15	10:44
Antimony, Dissolved	EPA 200.8, Rev. 5.4	7440-36-0	ug/l	<1.00		1.00	KWILLIAMS	11/13/15	13:02
Arsenic, Dissolved	EPA 200.8, Rev. 5.4	7440-38-2	ug/l	<0.50		0.50	KWILLIAMS	11/13/15	13:02
Beryllium, Dissolved	EPA 200.8, Rev. 5.4	7440-41-7	ug/l	<0.10		0.10	KWILLIAMS	11/13/15	13:02
Cadmium, Dissolved	EPA 200.8, Rev. 5.4	7440-43-9	ug/l	<0.05		0.05	KWILLIAMS	11/19/15	13:10
Chromium, Total	EPA 200.8, Rev. 5.4	7440-47-3	ug/l	<1.0		1.0	KWILLIAMS	11/13/15	12:56
Copper, Dissolved	EPA 200.8, Rev. 5.4	7440-50-8	ug/l	0.83		0.50	KWILLIAMS	11/13/15	13:02
Lead, Dissolved	EPA 200.8, Rev. 5.4	7439-92-1	ug/l	<0.10		0.10	KWILLIAMS	11/13/15	13:02
Nickel, Dissolved	EPA 200.8, Rev. 5.4	7440-02-0	ug/l	0.79		0.50	KWILLIAMS	11/13/15	13:02
Selenium, Total	EPA 200.8, Rev. 5.4	7782-49-2	ug/l	<0.5		0.5	KWILLIAMS	11/13/15	12:56
Silver, Dissolved	EPA 200.8, Rev. 5.4	7440-22-4	ug/l	<0.20		0.20	KWILLIAMS	11/13/15	13:02
Thallium, Dissolved	EPA 200.8, Rev. 5.4	7440-28-0	ug/l	<0.50		0.50	KWILLIAMS	11/13/15	13:02
Zinc, Dissolved	EPA 200.8, Rev. 5.4	7440-66-6	ug/l	13.1		1.00	KWILLIAMS	11/19/15	13:10
Total Dissolved Solids	SM 2540C, 2011		mg/l	247		0.0	JSPUTE	11/03/15	10:03

Notes

LOQ is lowest concentration at which quantitation is demonstrated.
**Analyte is not included in the HRSD CEL VELAP scope of accreditation*

CENTRAL ENVIRONMENTAL LABORATORY ANALYTICAL REPORT

VA Laboratory ID 460011

HRSD

Job ID: RV-30-OCT-15-003

Report Serial No.: 2015-2521

Sample ID: RV_MC_FNE-G-103015-1
Sample Date: 10/30/2015
Customer Sample ID: Rivanna Water and Sewer Authority - Moores Creek WWTP - FNE
Sample ID: 462599
Sample Sub-Type: SAMP

Analyte	Method	CAS#	Unit	Result	Flag	LOQ	Analyst	Analysis Date	Analysis Time
Total Cyanide	Lachat 10-204-00-1X	74-90-8	mg/l	<0.01		0.01	JCOOK	11/06/15	11:55
HEM (Total Oil and Grease)	EPA 1664B		mg/l	<5.0		5.0	ANROBERTS	11/03/15	08:16
SGT-HEM	EPA 1664B		mg/l	<5.0		5.0	ANROBERTS	11/03/15	13:34

Notes

LOQ is lowest concentration at which quantitation is demonstrated.
**Analyte is not included in the HRSD CEL VELAP scope of accreditation*

Authorized By: Robin Parnell - Lab Manager Robin Parnell

Date Authorized: 11/23/2015

CENTRAL ENVIRONMENT LABORATORY
1432 AIR RAIL AVENUE
VIRGINIA BEACH, VA 23455
TEL: 757-460-4214
FAX: 757-460-6586

CHAIN OF CUSTODY

COC ID: 22145 COC NAME: RV_10/30/15 20:02

Sample ID	Container No	Job Name	Date	Time	Sampler Id	Matrix	Type	Samp Temp oC	Preservation	Status	CN_FIA	HARDNE	HEM	HG_CVA	ICP_200_	ICPMS_2	PHNL_FI	SGT	TDS	VOC824
RV_MC_FB-C-103015-1	C278923	RV-30-OCT-15-003	10/30/2015	1430	JJACKSON	L	C	.	.	R				X		X				
	C278922	RV-30-OCT-15-003	10/30/2015	1430	JJACKSON	L	C	.	.	R						X				
RV_MC_FNE-C-103015-1	C278921	RV-30-OCT-15-003	10/30/2015	1500	JJACKSON	L	C	5.4	.	R									X	
	C278919	RV-30-OCT-15-003	10/30/2015	1500	JJACKSON	L	C	.	.	R				X		X				
	C278918	RV-30-OCT-15-003	10/30/2015	1500	JJACKSON	L	C	.	.	R		X			X	X				
RV_MC_FNE-G-103015-1	C278949	RV-30-OCT-15-003	10/30/2015	1315	JJACKSON	L	G	4.7	.	R			X					X		
	C278948	RV-30-OCT-15-003	10/30/2015	1315	JJACKSON	L	G	5.4	.	R			X					X		
	C278947	RV-30-OCT-15-003	10/30/2015	1315	JJACKSON	L	G	4.8	.	R			X					X		
	C278946	RV-30-OCT-15-003	10/30/2015	1400	JJACKSON	L	G	9.0	.	R										X
	C278945	RV-30-OCT-15-003	10/30/2015	1400	JJACKSON	L	G	8.6	.	R										X
	C278944	RV-30-OCT-15-003	10/30/2015	1400	JJACKSON	L	G	7.6	.	R										X
	C278943	RV-30-OCT-15-003	10/30/2015	1400	JJACKSON	L	G	8.5	.	R										X
	C278942	RV-30-OCT-15-003	10/30/2015	1400	JJACKSON	L	G	8.6	.	R										X
	C278941	RV-30-OCT-15-003	10/30/2015	1400	JJACKSON	L	G	8.4	.	R										X
	C278940	RV-30-OCT-15-003	10/30/2015	1400	JJACKSON	L	G	8.9	.	R										X
	C278939	RV-30-OCT-15-003	10/30/2015	1400	JJACKSON	L	G	9.5	.	R										X
	C278927	RV-30-OCT-15-003	10/30/2015	1315	JJACKSON	L	G	4.7	.	R			X					X		
	C278926	RV-30-OCT-15-003	10/30/2015	1315	JJACKSON	L	G	6.0	pH > 10	R	X									
	C278925	RV-30-OCT-15-003	10/30/2015	1315	JJACKSON	L	G	4.8	pH < 2	R							X			
	C278924	RV-30-OCT-15-003	10/30/2015	1400	JJACKSON	L	G	10.4	.	R										X

Comments:

Sample ID	Container No	Comment

ACTION	BY	DATE/TIME
INITIATED:	James Jackson - TSD WQ Technician	10/30/2015 19:53
CUSTODY:		
RECEIVED:	Edwin Strange - Specialist	11/2/2015 11:27

REPORT OF ANALYSIS

CLIENT: Hampton Roads Sanitation District
ATTN: Kathy Hobson
ADDRESS: P. O. Box 5911
Virginia Beach, VA 23471-0911
PHONE: (757) 460-4203
FAX: khobson@hrsd.com

Special Notes:

SAMPLE COLLECTED BY: CLIENT
GRAB COLLECTION:
Date: 10/16/2015 Time: 1230
COMPOSITE COLLECTION:
Start Date: Time:
End Date: Time:

PICK UP BY: CLIENT
SAMPLE RECEIPT:
Date: 10/19/2015 Time: 1045
NUMBER OF CONTAINERS: 9
SAMPLE CONDITION: ☑ Good ☐ Other (See C-O-C)
REPORT NO: 15-15641 17:29

SAMPLE ID: RV MC FNE
SAMPLE NO: 15-15641

Parameter	Method Number	JRA QL	Result	Unit	Analyst	Date	Time
Volatiles							
Benzene	624	5	< 5	ug/L	SDT	10/19/15	1503
1,3-Dichlorobenzene	624	5	< 5	ug/L	SDT	10/19/15	1503
1,1,2-Trichloroethane	624	5	< 5	ug/L	SDT	10/19/15	1503
Toluene	624	5	< 5	ug/L	SDT	10/19/15	1503
2-Chloroethyl vinyl ether	624	10	< 10	ug/L	SDT	10/19/15	1503
Bromoform	624	5	< 5	ug/L	SDT	10/19/15	1503
Tetrachloroethene	624	5	< 5	ug/L	SDT	10/19/15	1503
trans-1,2-Dichloroethene	624	5	< 5	ug/L	SDT	10/19/15	1503
Ethylbenzene	624	5	< 5	ug/L	SDT	10/19/15	1503
Acrylonitrile	624	50	< 50	ug/L	SDT	10/19/15	1503
1,2-Dichlorobenzene	624	5	< 5	ug/L	SDT	10/19/15	1503
1,4-Dichlorobenzene	624	5	< 5	ug/L	SDT	10/19/15	1503
Chlorobenzene/Monochlorobenzene	624	5	< 5	ug/L	SDT	10/19/15	1503
Dibromochloromethane	624	5	< 5	ug/L	SDT	10/19/15	1503
1,3-Dichloropropene(cis & trans)	624	5	< 5	ug/L	SDT	10/19/15	1503
Methylene Chloride/Dichloromethane	624	5	< 5	ug/L	SDT	10/19/15	1503
Acrolein	624	50	< 50	ug/L	SDT	10/19/15	1503
Bromomethane	624	5	< 5	ug/L	SDT	10/19/15	1503
Trichloroethene	624	5	< 5	ug/L	SDT	10/19/15	1503
Chloroethane	624	5	< 5	ug/L	SDT	10/19/15	1503
Chloromethane (Methyl Chloride)	624	5	< 5	ug/L	SDT	10/19/15	1503
1,1-Dichloroethene	624	5	< 5	ug/L	SDT	10/19/15	1503
1,1-Dichloroethane	624	5	< 5	ug/L	SDT	10/19/15	1503
Chloroform	624	5	< 5	ug/L	SDT	10/19/15	1503
1,2-Dichloroethane	624	5	< 5	ug/L	SDT	10/19/15	1503
1,1,1-Trichloroethane	624	5	< 5	ug/L	SDT	10/19/15	1503
Carbon Tetrachloride	624	5	< 5	ug/L	SDT	10/19/15	1503
Bromodichloromethane	624	5	< 5	ug/L	SDT	10/19/15	1503
1,1,2,2-Tetrachloroethane	624	5	< 5	ug/L	SDT	10/19/15	1503

REPORT OF ANALYSIS

SAMPLE ID: RV MC FNE
SAMPLE NO: 15-15641

Parameter	Method Number	JRA QL	Result	Unit	Analyst	Date	Time
Volatiles							
1,2-Dichloropropane	624	5	< 5	ug/L	SDT	10/19/15	1503
Vinyl Chloride	624	5	< 5	ug/L	SDT	10/19/15	1503

NOTES:

JRA Quantification Level is the concentration of the lowest calibration standard above zero with a reliable signal.

Reproduction of this report is not permitted, except in full, without written approval from James R Reed & Associates.

The results on this report relate only to the sample(s) provided for analysis.

Results conform to NELAC standards, where applicable, unless otherwise indicated.

Authorized By: Elaine Claiborne

Elaine Claiborne, Laboratory Director

Date: 28-Oct-15

James R. Reed & Associates
770 Pilot House Drive, Newport News, VA 23606
(757) 873-4703 ● Fax: (757) 873-1498

VELAP# 460013
EPA# VA00015

CHAIN OF CUSTODY

Company Name: HRSD
Company Contact: Robin Parnell Telephone: 757.460.4203
Results To: Kathy Hobson Fax: 757.460.6586
Address: PO Box 5911
Virginia Beach, VA 23471-0911
Project ID:

ANALYSES REQUESTED

											Bottle I.D												
											Preserv.												
												VOL Organics EPA 624											
			Composite				Grab																
JRA ID #15	Sample Type*	Sample Location	Start Date	Start Time	End Date	End Time	Date	Time	Total # of cont.														
15639	other	USNB001_FFS					101615	0915	3														
15640		DPC001_#1					101615	1150	3														
15641		RV_MC_FNE					101615	1230	9														

*WW= Wastewater, GW = Groundwater, DW - Drinking Water, HW - Hazardous Waste, OTHERS

Sampled By: Date/Time:
Relinquished By: Date/Time: 10/19/15 @ 10:45
Received By: Elaine Claiborne Date/Time: 10/19/15 @ 1045
Relinquished By: Date/Time:
Received By: Date/Time:

Preservatives:
1 = ≤6°C 6 = $Na_2S_2O_3$ + HCl 10=Ascorbic Acid + HCl
2 = HNO_3 7 = NaOH + ZnOAc 11=HCl
3 = H_2SO_4 8 = H_2SO_4 + FAS 12=Zinc Acetate + NaOH
4 = NaOH 9 = NH_4Cl 13=Na_2SO_3 + HCl
5 = $Na_2S_2O_3$ 14=Na_2SO_3 + H_2SO_4

___for Compliance
___Not for Compliance

VOA Chlorine Check: POS___NEG___ By:_____
Dechlorinated:_____Yes

CN Interference Check: Positive Negative
Sulfide: _____ _____
Oxidizing Agent: _____ _____

Please include a temperature blank container along with samples to be submitted.

Arrival Temp: 3.3 °C

JAMES R. REED and ASSOCIATES (757) 873-4703; FAX (757) 873-1498
770 Pilot House Drive, Newport News, VA 23606

HRSD
Cleaning wastewater every day for a better Bay.

1432 Air Rail Avenue, Virginia Beach, VA 23455-3002 • 757.460.4205 • Fax: 757.460.6586 • www.hrsd.com

10/30/15 - Rivanna - MC-FNE

This analytical report contains 5 pages

Stuart Wilson
Rivanna Water & Sewer Authority
695 Moore's Creek Lane
Charlottesville, VA 22902

swilson@rivanna.org

Date Sent: **11/23/15**

HRSD CEL, Central Environmental Laboratory is VELAP/NELAC accredited by DCLS, the Division of Consolidated Laboratory Services.

VA Laboratory ID#: 460011

Analytical test results meet all requirements of VELAP/NELAC unless otherwise noted under the analysis.

Test results relate only to the sample tested. Clients should be aware that a critical step in chemical or microbiological analysis is the collection of the sample.

This report may not be reproduced, except in full, without written approval from HRSD.

If you have any questions concerning this report, please do not hesitate to contact Robin Parnell, CEL Laboratory Manager at (757) 460-4203.
rparnell@hrsd.com
Kim Fordyce, CEL Administrative Assistant at (757) 460-4205.
kfordyce@hrsd.com

CENTRAL ENVIRONMENTAL LABORATORY ANALYTICAL REPORT

VA Laboratory ID 460011

HRSD

Job ID: RV-30-OCT-15-003

Report Serial No.: 2015-2521

Sample ID: RV_MC_FB-C-103015-1
Sample Date: 10/30/2015
Customer Sample ID: Rivanna Water and Sewer Authority - Moores Creek WWTP - Field Blank
Sample ID: 462598
Sample Sub-Type: FB

Analyte	Method	CAS#	Unit	Result	Flag	LOQ	Analyst	Analysis Date	Analysis Time
Mercury, Dissolved	EPA 245.1	92786-62-4	ug/l	<0.10		0.10	BSTAPLES	11/06/15	10:41
Antimony, Dissolved	EPA 200.8, Rev. 5.4	7440-36-0	ug/l	<1.00		1.00	KWILLIAMS	11/13/15	13:13
Arsenic, Dissolved	EPA 200.8, Rev. 5.4	7440-38-2	ug/l	<0.50		0.50	KWILLIAMS	11/13/15	13:13
Beryllium, Dissolved	EPA 200.8, Rev. 5.4	7440-41-7	ug/l	<0.10		0.10	KWILLIAMS	11/13/15	13:13
Cadmium, Dissolved	EPA 200.8, Rev. 5.4	7440-43-9	ug/l	<0.05		0.05	KWILLIAMS	11/19/15	13:20
Chromium, Total	EPA 200.8, Rev. 5.4	7440-47-3	ug/l	<1.0		1.0	KWILLIAMS	11/13/15	13:08
Copper, Dissolved	EPA 200.8, Rev. 5.4	7440-50-8	ug/l	<0.50		0.50	KWILLIAMS	11/13/15	13:13
Lead, Dissolved	EPA 200.8, Rev. 5.4	7439-92-1	ug/l	<0.10		0.10	KWILLIAMS	11/13/15	13:13
Nickel, Dissolved	EPA 200.8, Rev. 5.4	7440-02-0	ug/l	<0.50		0.50	KWILLIAMS	11/13/15	13:13
Selenium, Total	EPA 200.8, Rev. 5.4	7782-49-2	ug/l	<0.5		0.5	KWILLIAMS	11/13/15	13:08
Silver, Dissolved	EPA 200.8, Rev. 5.4	7440-22-4	ug/l	<0.20		0.20	KWILLIAMS	11/13/15	13:13
Thallium, Dissolved	EPA 200.8, Rev. 5.4	7440-28-0	ug/l	<0.50		0.50	KWILLIAMS	11/13/15	13:13
Zinc, Dissolved	EPA 200.8, Rev. 5.4	7440-66-6	ug/l	<1.00		1.00	KWILLIAMS	11/19/15	13:20

Notes

LOQ is lowest concentration at which quantitation is demonstrated.
**Analyte is not included in the HRSD CEL VELAP scope of accreditation*