VPDES PERMIT PROGRAM FACT SHEET

This document gives pertinent information concerning the VPDES Permit listed below. This permit is being processed as a **MAJOR, MUNICIPAL** permit.

1. **PERMIT NO.:** VA0081230 **EXPIRATION DATE:** 1/27/2013

2. **FACILITY NAME AND LOCAL MAILING ADDRESS**

Hampton Roads Sanitation District
Army Base STP
1436 Air Rail Ave
Virginia Beach, VA 23455

FACILITY LOCATION ADDRESS (IF DIFFERENT)

401 Lagoon Road
Norfolk, VA 23505

CONTACT AT FACILITY:
NAME: Jamie Heisig-Mitchell
TITLE: Chief of Technical Services
PHONE: (757) 460-4220

CONTACT AT LOCATION ADDRESS
NAME: N/A
TITLE:
PHONE:

3. **OWNER CONTACT:** (TO RECEIVE PERMIT)
NAME: Mr. Edward G. Henifin
TITLE: General Manager
COMPANY NAME: HRSD
ADDRESS: 1436 Air Rail Ave
Virginia Beach, VA 23455

PHONE: (757) 460-2261

CONSULTANT CONTACT:
NAME: N/A
FIRM NAME:
ADDRESS:

PHONE: ( )

4. **PERMIT DRAFTED BY:** DEQ, Water Permits, Regional Office

Permit Writer(s): Deanna Austin DA Date(s): 5/25/12-5/30/12
Reviewed By: Mark Sauer MS Date(s): 6/5/12

5. **PERMIT ACTION:**

( ) Issuance (X) Reissuance ( ) Revoke & Reissue ( ) Owner Modification
( ) Board Modification ( ) Change of Ownership/Name [Effective Date:]

6. **SUMMARY OF SPECIFIC ATTACHMENTS LABELED AS:**

Attachment 1	Site Inspection Report/Memorandum
Attachment 2	Discharge Location/Topographic Map
Attachment 3	Schematic/Plans & Specs/Site Map/Water Balance
Attachment 4	TABLE I - Discharge/Outfall Description
Attachment 5	TABLE II - Effluent Monitoring/Limitations
Attachment 6	Effluent Limitations/Monitoring Rationale/Suitable Data/Antidegradation/Antibacksliding
Attachment 7	Special Conditions Rationale
Attachment 8	Toxics Monitoring/Toxics Reduction/WET Limit Rationale
Attachment ____	Material Stored
Attachment 9	Receiving Waters Info./Tier Determination/STORET Data/Stream Modeling
Attachment 9	303(d) Listed Segments
Attachment 10	TABLE III(a) and TABLE III(b) - Change Sheets
Attachment 11	NPDES Industrial Permit Rating Worksheet and EPA Permit Checklist
Attachment 12	Chronology Sheet
Attachment ____	Public Participation

APPLICATION COMPLETE:5/30/12 VDH Response 6/5/12 DSS 6/ /12

PERMIT CHARACTERIZATION: (Check as many as appropriate)

(X) Existing Discharge
( ) Proposed Discharge
(X) Municipal
SIC Code #4952
( ) Industrial
SIC Code(s)
(X) POTW
( ) PVOTW
( ) Private
( ) Federal
( ) State
( ) Publicly-Owned Industrial

(X) Effluent Limited
(X) Water Quality Limited
( ) WET Limit
( ) Interim Limits in Permit
( ) Interim Limits in Other Document
( ) Compliance Schedule Required
( ) Site Specific WQ Criteria
( ) Variance to WQ Standards
( ) Water Effects Ratio
(X) Discharge to 303(d) Listed Segment
(X) Toxics Management Program Required
( ) Toxics Reduction Evaluation
( ) Storm Water Management Plan
(X) Pretreatment Program Required
( ) Possible Interstate Effect
(X) CBP Significant Dischargers List

8. **RECEIVING WATERS CLASSIFICATION:** River basin information.

Outfall No: 001-002

Receiving Stream: Elizabeth River
River Mile: 2-ELI000.54 / 2-ELI000.91
Basin: James River (Lower)
Subbasin: N/A
Section: 1
Class: II
Special Standard(s): a, z, bb
Tidal: YES
7-Day/10-Year Low Flow: N/A
1-Day/10-Year Low Flow: N/A
30-Day/5-Year Low Flow: N/A
Harmonic Mean Flow: N/A

9. **FACILITY DESCRIPTION:** Describe the type facility from which the discharges originate.

Existing municipal discharge resulting from the discharge of treated domestic sewage.

10. **LICENSED OPERATOR REQUIREMENTS:** ( ) No (X) Yes Class: I

11. **RELIABILITY CLASS:** I

12. **SITE INSPECTION DATE:** 1/25/11 **REPORT DATE:** 2/9/11

Performed By: Steve Long

SEE ATTACHMENT 1

13. **DISCHARGE(S) LOCATION DESCRIPTION:** Provide USGS Topo which indicates the discharge location, significant (large) discharger(s) to the receiving stream, water intakes, and other items of interest.

Name of Topo: Norfolk North Quadrant No.: 035A **SEE ATTACHMENT 2**

14. **ATTACH A SCHEMATIC OF THE WASTEWATER TREATMENT SYSTEM(S) [IND. & MUN.]. FOR INDUSTRIAL FACILITIES, PROVIDE A GENERAL DESCRIPTION OF THE PRODUCTION CYCLE(S) AND ACTIVITIES. FOR MUNICIPAL FACILITIES, PROVIDE A GENERAL DESCRIPTION OF THE TREATMENT PROVIDED.**

Narrative: This facility provides secondary treatment and is scheduled for enhanced nutrient removal. The CTC for this project was issued 2/5/10. Completion may not be done until 2015. Treatment is provided by screening, grit removal, primary clarification, aeration, secondary clarification, chlorination and dechlorination. Biosolids handling consists of sludge gravity thickening, centrifuge dewatering, and incineration.

SEE ATTACHMENT 3

15. **DISCHARGE DESCRIPTION**: Describe each discharge originating from this facility.

SEE **TABLE I** (OR CAN SUBSTITUTE PAGE 2C) - **SEE ATTACHMENT 4**

16. **COMBINED TOTAL FLOW**:

TOTAL: 18 MGD (for public notice)

PROCESS FLOW: _____ MGD (IND.)

NONPROCESS/RAINFALL DEPENDENT FLOW: 0.02 (Est.)

DESIGN FLOW: 18 MGD (MUN.)

17. **STATUTORY OR REGULATORY BASIS FOR EFFLUENT LIMITATIONS AND SPECIAL CONDITIONS**: (Check all which are appropriate)

X State Water Control Law
X Clean Water Act
X VPDES Permit Regulation (9 VAC 25-31-10 et seq.)
X EPA NPDES Regulation (Federal Register)
___ EPA Effluent Guidelines (40 CFR 133 or 400 - 471)
X Water Quality Standards (9 VAC 25-260-5 et seq.)
___ Wasteload Allocation from a TMDL or River Basin Plan

18. **EFFLUENT LIMITATIONS/MONITORING**: Provide all limitations and monitoring requirements being placed on each outfall.

SEE TABLE II - ATTACHMENT 5

19. **EFFLUENT LIMITATIONS/MONITORING RATIONALE**: Attach any analyses of an outfall by individual toxic parameter. As a minimum, it will include: statistics summary (number of data values, quantification level, expected value, variance, covariance, 97th percentile, and statistical method); wasteload allocation (acute, chronic and human health); effluent limitations determination; input data listing. Include all calculations used for each outfall and set of effluent limits and those used in any model(s). Include all calculations/documentation of any antidegradation or anti-backsliding issues in the development of any limitations; complete the review statements below. Provide a rationale for limiting internal waste streams and indicator pollutants. Attach chlorine mass balance calculations, if performed. Attach any additional information used to develop the limitations, including any applicable water quality standards calculations (acute, chronic and human health).

OTHER CONSIDERATIONS IN LIMITATIONS DEVELOPMENT:

VARIANCES/ALTERNATE LIMITATIONS: Provide justification or refutation rationale for requested variances or alternatives to required permit conditions/limitations. This includes, but is not limited to: waivers from testing requirements; variances from technology guidelines or water quality standards; WER/translator study consideration; variances from standard permit limits/conditions.

No variances were given during this permit reissuance.

SUITABLE DATA: In what, if any, effluent data were considered in the establishment of effluent limitations and provide all appropriate information/calculations.

All suitable effluent data were reviewed.

ANTIDEGRADATION REVIEW: Provide all appropriate information/calculations for the antidegradation review.

The receiving stream has been classified as tier 1; therefore, no further review is needed. Permit limits have been established by determining wasteload allocations which will result in attaining and/or maintaining all water quality criteria which apply to the receiving stream, including narrative criteria. These wasteload allocations will provide for the protection and maintenance of all existing uses.

ANTIBACKSLIDING REVIEW: Indicate if antibacksliding applies to this permit and, if so, provide all appropriate information.

There are no backsliding issues to address in this permit (i.e., limits as stringent or more stringent when compared to the previous permit).
SEE ATTACHMENT 6

20. **SPECIAL CONDITIONS RATIONALE**: Provide a rationale for each of the permit's special conditions.

SEE ATTACHMENT 7

21. **TOXICS MONITORING/TOXICS REDUCTION AND WET LIMIT SPECIAL CONDITIONS RATIONALE**: Provide the justification for any toxics monitoring program and/or toxics reduction program and WET limit.

SEE ATTACHMENT 8

22. **SLUDGE DISPOSAL PLAN**: Provide a description of the sludge disposal plan (e.g., type sludge, treatment provided and disposal method). Indicate if any of the plan elements are included within the permit.

Biosolids are incinerated onsite. Backup methods include hauling solids to another HRSD incinerator. Biosolids could also be sent to Bethel Landfill in Hampton, VA.

23. **MATERIAL STORED**: List the type and quantity of wastes, fluids, or pollutants being stored at this facility. Briefly describe the storage facilities and list, if any, measures taken to prevent the stored material from reaching State waters.

The materials stored on site include sodium hypochlorite, sodium bisulfate, sodium hydroxide, ferric chloride, polymer, fuel oil, propane, ammonia, muriatic acid, gasoline and diesel fuel. The materials are either stored in buildings with drains connected to the treatment system or are in contained areas. Fuel tanks are double walled.

24. **RECEIVING WATERS INFORMATION**: Refer to the State Water Control Board's Water Quality Standards [e.g., River Basin Section Tables (9 VAC 25-260-5 et seq.). **Use 9 VAC 25-260-140 C (introduction and numbered paragraph) to address tidal waters where fresh water standards would be applied or transitional waters where the most stringent of fresh or salt water standards would be applied.** Attach any memoranda or other information which helped to develop permit conditions (i.e. tier determinations, PReP complaints, special water quality studies, STORET data and other biological and/or chemical data, etc.

SEE ATTACHMENT 9

25 305(b)/**303(d) Listed Segments**: Indicate if the facility discharges to a segment that is listed on the current 303(d) list and, if so, provide all appropriate information/calculations.

This facility discharges directly to the Elizabeth River. This receiving stream segment has been listed in Category 5 of the 305(b)/303(d) list for non-attainment of DO, estuarine benthics, and PCBs.
EPA approved the Chesapeake Bay TMDL on 12/29/10 for this segment. This is for nitrogen, phosphorus, and TSS. The facility is listed in the TMDL as a non-significant discharger. Because an aggregated WLA exists, this permit did not receive an individual WLA.
A PCB TMDL for the tidal James River and Elizabeth River has an anticipated completion date of 2014.

26. **CHANGES TO PERMIT**: Use **TABLE III(a)** to record any changes from the previous permit and the rationale for those changes. Use **TABLE III(b)** to record any changes made to the permit during the permit processing period and the rationale for those changes [i.e., use for comments from the applicant, VDH, EPA, other agencies and/or the public where comments resulted in changes to the permit limitations or any other changes associated with the special conditions or reporting requirements].

SEE ATTACHMENT 10

27. **NPDES INDUSTRIAL PERMIT RATING WORKSHEET:**

N/A - This is a municipal facility.

28. **DEQ PLANNING COMMENTS RECEIVED ON DRAFT PERMIT**: Document any comments received from DEQ planning.

The discharge is addressed in the Virginia Water Quality Management Plan (VAC25-720-60C). Limits for TN and TP are in the plan. TN and TP limits are met under the Nutrient GP bubble permit for the James River (VAN040090).

29. **PUBLIC PARTICIPATION:** Document comments/responses received during the public participation process. If comments/responses provided, especially if they result in changes to the permit, place in the attachment.

VDH/DSS COMMENTS RECEIVED ON DRAFT PERMIT: Document any comments received from the Virginia Dept. of Health and the Div. of Shellfish Sanitation and noted how resolved.

The VDH reviewed the application and waived their right to comment and/or object on the adequacy of the draft permit. Memo received 6/5/12.

The DSS has no comments on the application/draft permit. Memo received 6/ /12.

EPA COMMENTS RECEIVED ON DRAFT PERMIT: Document any comments received from the U.S. Environmental Protection Agency and noted how resolved.

EPA has no objections to the adequacy of the draft permit.

OR

By letter dated _____, the EPA provided the following comments:

ADJACENT STATE COMMENTS RECEIVED ON DRAFT PERMIT: Document any comments received from an adjacent state and noted how resolved.

Not Applicable.

OTHER AGENCY COMMENTS RECEIVED ON DRAFT PERMIT: Document any comments received from any other agencies (e.g., VIMS, VMRC, DGIF, etc.) and noted how resolved.

Not Applicable.

OTHER COMMENTS RECEIVED FROM RIPARIAN OWNERS/CITIZENS ON DRAFT PERMIT: Document any comments received from other sources and note how resolved.

The application and draft permit have received public notice in accordance with the VPDES Permit Regulation, and no comments were received.

DESCRIBE PN COMMENTS AND RESOLUTIONS. PROVIDE PUBLIC HEARING DATE AND REFERENCE BACKGROUND MEMORANDUM, IF APPROPRIATE.

PUBLIC NOTICE INFORMATION: Comment Period: Start Date
End Date

Persons may comment in writing or by e-mail to the DEQ on the proposed issuance/reissuance/modification of the permit within 30 days from the date of the first notice. Address all comments to the contact person listed below. Written or e-mail comments shall include the name, address, and telephone number of the writer, and shall contain a complete, concise statement of the factual basis for comments. Only those comments received within this period will be considered. The Director of the DEQ may decide to hold a public hearing if public response is significant. Requests for public hearings shall state the reason why a hearing is requested, the nature of the issues proposed to be raised in the public hearing and a brief explanation of how the requestor's interests would be directly and adversely affected by the proposed permit action.

All pertinent information is on file and may be inspected, and arrangements made for copying by contacting Deanna Austin at: Department of Environmental Quality (DEQ), Tidewater Regional Office, 5636 Southern Boulevard, Virginia Beach, VA 23462. Telephone: 757-518-2008 E-mail:deanna.austin@deq.virginia.gov

Following the comment period, the Board will make a determination regarding the proposed issuance/reissuance/modification. This determination will become effective, unless the Director grants a public hearing. Due notice of any public hearing will be given.

30. **ADDITIONAL FACT SHEET COMMENTS/PERTINENT INFORMATION:**

ATTACHMENT 1

SITE INSPECTION REPORT/MEMORANDUM

Facility:	HRSD Army Base STP
County/city:	Norfolk

VPDES NO.	VA0081230

DEPARTMENT OF ENVIRONMENTAL QUALITY
WASTEWATER FACILITY
INSPECTION REPORT
PART 1

Inspection date:	**January 25, 2011**	Date form completed:	**February 9, 2011**
Inspection by:	**Steven J.E. Long**	Inspection agency:	**DEQ/TRO**
Time spent:	**5.5 hours**	Announced Inspection:	[ ] Yes [√] No
Reviewed by: **Kenneth T. Raum**		Photographs taken at site?	[√] Yes [ ] No
Present at inspection:	**Peggy MacCann – Plant Superintendent, Gene Groszek – Chief Operator, Brian McNamair – Plant Manager, Laura Shields - Operator**		

FACILITY TYPE:	FACILITY CLASS:
(√) Municipal	(√) Major
( ) Industrial	( ) Minor
( ) Federal	( ) Small
( ) VPA/NDC	( ) High Priority ( ) Low Priority

TYPE OF INSPECTION:					
Routine	√	Reinspection		Compliance/assistance/complaint	
Date of previous inspection:	**March 26, 2008**	Agency:	**DEQ/TRO**		

Population Served:		Connections Served	

Last Month Average Influent: December 2010	BOD_5 (mg/l)	**224**	TSS (mg/l)	**146**	Flow (MGD)	**9.44**	Total P (mg/l)	**4.8**
	Other: **pH – 6.7-6.9 s.u.**							
Last Month Average Effluent: December 2010	BOD_5 (mg/l)	**9**	TSS (mg/l)	**14**	Flow (MGD)	**9.44**	NH_3 (mg/l)	**0.74**
	Other:							
	BOD_5 (mg/l)		TSS (mg/l)		Flow (MGD)		NH_3 (mg/l)	
	Other:							

Data verified in preface:	Updated?		NO CHANGES?	√
Has there been any new construction?		YES	√	NO
If yes, were the plans and specifications approved?		YES	√	NO
DEQ approval date:	**Certificate to construct issued 2/5/10.**			

COPIES TO: (x) DEQ/TRO; (x) DEQ/OWCP; (x) OWNER; ( ) OPERATOR; ( ) EPA-Region III; ( ) Other:

PLANT OPERATION AND MAINTENANCE												
1.	Class/number of licensed operators:	I	**15**	II		III	**3**	IV		Trainee		
2.	Hours per day plant manned?	**24 hours/day, 7 days/week**										
3.	Describe adequacy of staffing	GOOD		√	AVERAGE					POOR		
4.	Does the plant have an established program for training personnel								YES	√	NO	
5.	Describe the adequacy of training	GOOD		√	AVERAGE					POOR		
6.	Are preventative maintenance tasks scheduled								YES	√	NO	
7.	Describe the adequacy of maintenance	GOOD		√	AVERAGE					POOR		
8.	Does the plant experience any organic/hydraulic overloading?								YES		NO	√
	If yes, identify cause/impact on plant	**na**										
9.	Any bypassing since last inspection?								YES		NO	√
10.	Is the standby electrical generator operational?					YES	√		NO		NA	
11.	How often is the standby generator exercised?	**Checked weekly for operations; placed under load monthly**										
	Power transfer switch?	**monthly**		ALARM SYSTEM?				**Weekly**				
12.	When was the cross connection last tested on the potable supply?								**3 units, 10/29/10**			
13.	Is the STP alarm system operational?					YES	√		NO		NA	
14.	Is sludge disposed in accordance with an approved SMP					YES	√		NO		NA	
15.	Is septage received by the facility?								YES	√	NO	
	Is septage loading controlled?					YES	√		NO		NA	
	Are records maintained?					YES	√		NO		NA	

OVERALL APPEARANCE OF FACILITY	GOOD	√	AVERAGE		POOR	

COMMENTS:	**With plant upgrade and construction, septage has been diverted to other facilities.**

PLANT RECORDS

	WHICH OF THE FOLLOWING RECORDS DOES THE PLANT MAINTAIN?						
	Operational logs for each process unit	YES	√	NO		NA	
	Instrument maintenance and calibration	YES	√	NO		NA	
	Mechanical equipment maintenance	YES	√	NO		NA	
1.	Industrial waste contribution (municipal facilities)	YES	√	NO		NA	

	WHAT DOES THE OPERATIONAL LOG CONTAIN					
	Visual Observations	√	Flow Measurement	√	Laboratory Results	√
2.	Process Adjustments	√	Control Calculations		Other?	

COMMENTS:

	WHAT DO THE MECHANICAL EQUIPMENT RECORDS CONTAIN?					NA	
	MFG. Instructions	√	As Built Plans/specs	√	Spare Parts Inventory		√
3.	Lube Schedules	√	Other?		Equipment/parts Suppliers		√

COMMENTS:

	WHAT DO INDUSTRIAL WASTE CONTRIBUTION RECORDS CONTAIN? (MUNICIPAL)			NA	
	Waste Characteristics	√	Impact on Plant		
4.	Location and Discharge Types	√	Other?		

COMMENTS:

	WHICH OF THE FOLLOWING RECORDS ARE AT THE PLANT & AVAILABLE TO PERSONNEL?					NA	
	Equipment Maintenance Records	√	Industrial Contributor Records				
5.	Operational Log	√	Sampling/testing Records	√	Instrumentation Records		√

6.	Records not normally available to personnel at their location:	**Lab records at Central Lab, Industrial records with Pretreatment program.**

7.	Were the records reviewed during the inspection	YES	√	NO	
8.	Are records adequate and the O&M manual current?	YES	√	NO	
9.	Are the records maintained for the required 3-year time period	YES	√	NO	

COMMENTS: **Some records briefly reviewed while on site. Other records obtained electronically or physically for use in this report.**

SAMPLING								
1.	Are sampling locations capable of providing representative samples?			YES	√	NO		
2.	Do sample types correspond to VPDES permit requirements?			YES	√	NO		
3.	Do sampling frequencies correspond to VPDES permit requirements?			YES	√	NO		
4.	Does plant maintain required records of sampling?			YES	√	NO		
5.	Are composite samples collected in proportion to flow?	YES	√	NO		NA		
6.	Are composite samples refrigerated during collection?	YES	√	NO		NA		
7.	Does the plant run operational control tests?	YES	√	NO		NA		

COMMENTS: **Thermometer maintained in automatic samplers. Sampling typically exceeds the Permit requirements with all samples included in the monthly report.**

TESTING							
1.	Who performs the testing?	Plant	√	Central Lab	√	Commercial Lab	
	Name: **Field parameters tested by plant operators. Other laboratory analyses are conducted by Central Lab.**						

IF THE PLANT PERFORMS ANY TESTING, PLEASE COMPLETE QUESTIONS 2-4

2.	Which total residual chlorine method is used?	**Hach Pocket Colorimeter**				
3.	Does plant appear to have sufficient equipment to perform required tests?	YES	√	NO		
4.	Does testing equipment appear to be clean and/or operable?	YES	√	NO		

COMMENTS:

FOR INDUSTRIAL FACILITIES WITH TECHNOLOGY BASED LIMITS ONLY								
1.	Is the production process as described in permit application? If no, describe changes in comments section.	YES		NO		NA	√
2.	Are products/production rates as described in the permit application? If no list differences in comments section.	YES		NO		NA	√
3.	Has the Agency been notified of the changes and their impact on plant effluent? Date agency notified:	YES		NO		NA	√

COMMENTS:

	PROBLEMS IDENTIFIED AT LAST INSPECTION:	CORRECTED	NOT CORRECTED
	None noted.		

SUMMARY

	INSPECTION COMMENTS:
	Arrived at the Virginia Port Authority gate at approximately 1230 but did not gain access to the facility until they were contacted for escort to the site. Arrived at the facility at approximately 1315. Met with Brian McNamair, Plant Manager; Peggy MacCann, Plant Superintendent; Gene Groszek, Chief Operator; and Laura Shields, Plant Operator. Discussed the site visit and inspection routine and requested various documents for review. Some of the documents were just reviewed on site while others were provided for review after the site visit.
	The facility is undergoing new construction to upgrade the plant and to add nutrient removal. Construction has started for several new units but has not affected the wastewater treatment or the flow of the plant at this point. As units are constructed, the flow will be changed to allow for the new units to be placed in use and older units to be taken off line and modified as planned. Upon completion and issuance of the Certificate to Operate the facility will have nitrogen removal requirements added to the Permit.

	COMPLIANCE RECOMMENDATIONS FOR ACTION
	None noted.

FACILITY: HRSD Army Base STP **VA0081230**

DEPARTMENT OF ENVIRONMENTAL QUALITY
WASTEWATER FACILITY
INSPECTION REPORT
PART II

Unit Process Evaluation Summary Sheet*

UNIT PROCESS	APPLICABLE	COMMENTS
SEWAGE PUMPING		**No problems noted.**
FLOW MEASUREMENT		"
SCREENING/COMMINUTION		"
GRIT REMOVAL		"
PRIMARY SEDIMENTATION		"
ACTIVATED SLUDGE AERATION		"
SECONDARY SEDIMENTATION		"
TERTIARY SEDIMENTATION		"
CHLORINATION		"
DECHLORINATION		"
POST AERATION		"
EFFLUENT/PLANT OUTFALL		"
SLUDGE PUMPING		"
CENTRIFUGATION		"
INCINERATION		"

STANDARD COMMENTS:

1. UNIT NEEDS ATTENTION
2. ABNORMAL INFLUENT/EFFLUENT
3. EVIDENCE OF EQUIPMENT FAILURE
4. UNAPPROVED MODIFICATION OR TEMPORARY REPAIR
5. EVIDENCE OF PROCESS UPSET

***REFER TO INDIVIDUAL UNIT PROCESS EVALUATION FORMS**

UNIT PROCESS: **FLOW MEASUREMENT**

INFLUENT [√] INTERMEDIATE [ ] EFFLUENT [ ]

			YES	NO	NA
1.	Type of measuring device	**Parshall Flume with ultrasonic sensor**			
2.	Present reading?	**12 MGD**			
3.	Bypass channel		√		
4.	Bypass channel metered?			√	
5.	Return flow discharged upstream of the meter?		√		
	Identify:	**Floor drains, plant drop inlets with industrial exposures, centrate**			
6.	Device operating properly?		√		
7.	Date of last calibration?	**10/17/10**			
8.	*EVIDENCE OF THE FOLLOWING PROBLEMS*				
	Obstruction?	**Covered**			√
	Grease?	**Covered**			√

GENERAL CONDITION:	GOOD	√	FAIR		POOR	

COMMENTS:	

UNIT PROCESS:	SCREENINGS/COMMINUTION

			YES	NO	NA
1.	Number of manual units	**1**			
2.	Number of mechanical units	**2**			
3.	Number manual units in operation	**0**			
4.	Number of mechanical units in operation	**1**			
5.	Bypass channel provided		√		
	Bypass channel in use			√	
6.	Area adequately ventilated		√		
7.	Alarm system for equipment failure and/or overloads		√		
8.	Proper flow distribution between units				√
9.	How often are units checked and cleaned	**Checked approximately every hour. Cleaned automatically**			
10.	Cycle of operation	**Operates every other minute**			
11.	Volume of screenings removed	**26 ft^3, average Dec. 2010**			

GENERAL CONDITION:	GOOD	√	FAIR		POOR	

COMMENTS:	**One automatic unit is down for maintenance.**

UNIT PROCESS:	GRIT REMOVAL

							YES	NO	NA
1.	Number of units				**3**				
2.	Number units in operation				**1**				
3.	Operation of grit collection equipment:								
		Manual		Time Clock	√	Continuous Duty			
4.	Area adequately ventilated						√		
5.	Proper flow distribution between units								√
6.	Daily volume of grit removed				**39 ft^3, average Dec. 2010**				
7.	All equipment operable								

GENERAL CONDITION:	GOOD	√	FAIR		POOR	

COMMENTS:	**Average based on 8 days of disposal. Grit collected in flights, raised to screw trough and deposited to Grit Washer.**

UNIT PROCESS:	**SEDIMENTATION**

	PRIMARY	√	SECONDARY		TERTIARY		YES	NO	NA
1.	Number of units				4				
2.	Number units in operation				3				
3.	Proper flow distribution between units						√		
4.	Sludge collection system working properly?						√		
5.	Signs of short circuiting and/or overloads							√	
6.	Effluent weirs level						√		
7.	Effluent weirs clean						√		
8.	Scum collection system working properly						√		
9.	Influent/effluent baffle system working properly						√		
10.	Chemical Used		**Ferric Chloride**			Chemical Addition	√		
11.	Effluent characteristics			**Grey color**					

GENERAL CONDITION:	GOOD	√	FAIR		POOR	

COMMENTS:	**Unit #2 off line for routine maintenance.** **Ferric chloride added on two occasions, December 15th and 16th for average application of 213 lbs per day.**

UNIT PROCESS:	**SEDIMENTATION**

	PRIMARY		SECONDARY	√	TERTIARY		YES	NO	NA
1.	Number of units				4				
2.	Number units in operation				3				
3.	Proper flow distribution between units						√		
4.	Sludge collection system working properly?						√		
5.	Signs of short circuiting and/or overloads							√	
6.	Effluent weirs level						√		
7.	Effluent weirs clean						√		
8.	Scum collection system working properly						√		
9.	Influent/effluent baffle system working properly						√		
10.	Chemical Used		**Ferric Chloride**			Chemical Addition	√		
11.	Effluent characteristics			**Brown color**					

GENERAL CONDITION:	GOOD	√	FAIR		POOR	

COMMENTS:	**Unit #3 out of service for modifications.**

UNIT PROCESS:	**ACTIVATED SLUDGE**

			YES	NO	NA
1.	Number of aeration units	**2**			
2.	Number units in operation	**1**			
3.	Mode of operation:	**Mechanical Aeration (cone shaped auger)**			
4.	Proper flow distribution between units. **(Influent and effluent areas can be observed.)**		√		
5.	Foam control operational **(Controlled by non-potable water spray.)**		√		
6.	Scum control present		√		
7.	Dead spots **(Cannot observe.)**				√
8.	Excessive foam **(Controlled by non-potable water spray.)**			√	
9.	Poor aeration **(Cannot observe.)**				√
10.	Excessive scum **(Nothing observed at effluent discharge.)**			√	
11.	Aeration equipment malfunction **(No indication from effluent condition.)**			√	
12.	Other problem(s):			√	
13.	Effluent control devices working properly (OXIDATION DITCHES)				√

14. *MIXED LIQUOR CHARACTERISTICS AS AVAILABLE:* **December 2010**

pH (s.u.)	**6.5-6.9 1st stage aerobic**	MLSS (mg/l)	**1958**	DO (mg/l)	**3.7**	SVI	**90**
Odor		Settleability (ml/l) **30 min**		**169**		SDI	
Color							

15. *RETURN/WASTE SLUDGE RATES:* **December 2010**

Return Rate	**5.92 MGD**	Waste Rate	**0.348 MGD**	Waste Frequency	**Continuous**

16. *AERATION SYSTEM CONTROL:*

Time Clock		Manual Feed		Continuous Feed	√
Other:					

GENERAL CONDITION:	GOOD	√	FAIR		POOR	

COMMENTS:	

UNIT PROCESS:	CHLORINATION

				YES	NO	NA
1.	Number of chlorinators	**5 pumps**				
2.	Number chlorinators in operation	**1**				
3.	Number of evaporators?	**na**				
4.	Number of evaporators in operation	**na**				
5.	Number chlorine contact tanks	**2**				
6.	Number chlorine contact tanks in operation	**1**				
7.	Proper flow distribution between units?					√
	HOW IS CHLORINE INTRODUCED INTO THE WASTE STREAM?					
8.	Perforated Diffuser		Injector w/single entry point √	Tablet Feeder		
9.	Chlorine residual in contact basin effluent (mg/l)	**0.86 mg/L @ 1443**				
10.	Applied chlorine dosage (lbs/day)	**435, Dec. 2010**				
11.	Contact basin adequately baffled?			√		
12.	Adequate ventilation in chlorine cylinder storage area?					√
14.	Adequate ventilation in chlorine equipment room?			√		
15.	Proper safety precautions used?			√		

GENERAL CONDITION:	GOOD	√	FAIR		POOR	

COMMENTS:	

UNIT PROCESS:	DECHLORINATION

				YES	NO	NA
	Dechlorination chemical used?					
1.	Sulfur Dioxide	Bisulfite √	Other:			
2.	Number of sulfonators	**4 pumps**				
3.	Number sulfonators in operation	**1**				
4.	Number of evaporators?	**na**				
5.	Number of evaporators in operation	**na**				
6.	Number contact tanks	**1**				
7.	Number contact tanks in operation	**1**				
8.	Proper flow distribution between units?					√
	HOW IS CHEMICAL INTRODUCED INTO THE WASTE STREAM?					
9.	Perforated Diffuser √	Injector w/single entry point	Tablet Feeder			
10.	Chlorine residual in basin effluent	**<0.10 mg/l**				
11.	Applied dechlorination dosage(lbs/day)	**136, Dec. 2010**				
12.	Control system operational?			√		
13.	Control system adjusted?	Automatic √	Manual	Other:		
14.	Residual analyzer?			√		
15.	Contact basin adequately baffled?			√		
16.	Adequate ventilation in cylinder storage area?					√
17.	Adequate ventilation in equipment room?			√		
18.	Proper safety precautions used?			√		

GENERAL CONDITION:	GOOD	√	FAIR		POOR	

COMMENTS:	

UNIT PROCESS:	**WET WELL PUMPING**

									YES	NO	NA
1.	Number of pumps				**4**						
2.	Number pumps in operation				**2**						
3.	TYPE OF SLUDGE PUMPED:										
	Primary		Waste Activated			Other: **Plant Influent**					
	Secondary		Return Activated			Combination					
4.	TYPE OF PUMP:	Plunger		Diaphragm							
	Centrifugal:	√	Screwlift		Prog. Cavity		Other:				
5.	MODE OF OPERATION:	Manual		Automatic		√	Other:				
6.	Volume pumped:			**9.44 MGD, December 2010**							
7.	Alarm system for equipment failures/overloads operational?										

GENERAL CONDITION:	GOOD	√	FAIR		POOR	
COMMENTS:						

UNIT PROCESS:	**PRIMARY CLARIFIERS**

									YES	NO	NA
1.	Number of pumps				**4**						
2.	Number pumps in operation				**3**						
3.	TYPE OF SLUDGE PUMPED:										
	Primary		Waste Activated			Other: **Grit chamber effluent**		√			
	Secondary		Return Activated			Combination					
4.	TYPE OF PUMP:	Plunger		Diaphragm							
	Centrifugal:	√	Screwlift		Prog. Cavity		Other:				
5.	MODE OF OPERATION:	Manual		Automatic		√	Other:				
6.	Effluent volume pumped:			**10.15 MGD**							
7.	Alarm system for equipment failures/overloads operational?								√		

GENERAL CONDITION:	GOOD	√	FAIR		POOR	
COMMENTS:						

UNIT PROCESS:	**INTERMEDIATE PUMP STATION: PRIMARY EFFLUENT TO AERATION**

									YES	NO	NA
1.	Number of pumps				**4**						
2.	Number pumps in operation				**2**						
3.	TYPE OF SLUDGE PUMPED:										
	Primary		Waste Activated			Other: **Primary effluent**		√			
	Secondary		Return Activated			Combination					
4.	TYPE OF PUMP:	Plunger		Diaphragm							
	Centrifugal:	√	Screwlift		Prog. Cavity		Other:				
5.	MODE OF OPERATION:	Manual		Automatic		√	Other:				
6.	Effluent volume pumped:			**10.07 MGD**							
7.	Alarm system for equipment failures/overloads operational?								√		

GENERAL CONDITION:	GOOD	√	FAIR		POOR	
COMMENTS:						

UNIT PROCESS:	**RETURN ACTIVATED SLUDGE PUMPING**

									YES	NO	NA
1.	Number of pumps				**4**						
2.	Number pumps in operation				**3**						
3.	TYPE OF SLUDGE PUMPED:										
	Primary		Waste Activated			Other:					
	Secondary		Return Activated		√	Combination					
4.	TYPE OF PUMP:	Plunger		Diaphragm							
	Centrifugal:	√	Screwlift		Prog. Cavity		Other:				
5.	MODE OF OPERATION:	Manual		Automatic		√	Other:				
6.	Volume pumped:			**5.92 MGD, December 2010**							
7.	Alarm system for equipment failures/overloads operational?										

GENERAL CONDITION:	GOOD	√	FAIR		POOR	
COMMENTS:	**Clarifier sludge returned to splitter box at aeration unit influent.**					

UNIT PROCESS:	**WASTE ACTIVATED SLUDGE PUMPING**

									YES	NO	NA
1.	Number of pumps					**2**					
2.	Number pumps in operation					**1**					
3.	TYPE OF SLUDGE PUMPED:										
	Primary		Waste Activated		Other:		√				
	Secondary		Return Activated		Combination						
4.	TYPE OF PUMP:	Plunger		Diaphragm							
	Centrifugal:	√	Screwlift		Prog. Cavity		Other:				
5.	MODE OF OPERATION:	Manual		Automatic	√	Other:					
6.	Effluent volume pumped:			**0.348 MGD**							
7.	Alarm system for equipment failures/overloads operational?								√		

GENERAL CONDITION:	GOOD	√	FAIR		POOR	

COMMENTS:	**Waste activated solids sent to the primary clarifier. Solids from the primary clarifier are sent for further solids handling.**

UNIT PROCESS:	**PRIMARY AND WASTE ACTIVATED SLUDGE PUMPING**

									YES	NO	NA
1.	Number of pumps					**4**					
2.	Number pumps in operation					**3**					
3.	TYPE OF SLUDGE PUMPED:										
	Primary		Waste Activated		Other:						
	Secondary		Return Activated		√	Combination					
4.	TYPE OF PUMP:	Plunger		Diaphragm							
	Centrifugal:		Screwlift		Prog. Cavity		Other: **Positive Displacement**				
5.	MODE OF OPERATION:	Manual		Automatic	√	Other:					
6.	Volume pumped:			**0.085 MGD, December 2010**							
7.	Alarm system for equipment failures/overloads operational?										

GENERAL CONDITION:	GOOD	√	FAIR		POOR	

COMMENTS:	**Sludge from Primary settling (including WAS from the secondary settling) is sent to Bio-solids sludge tank.**

UNIT PROCESS:	**BIO-SOLIDS HOLDING TANK**

											YES	NO	NA
1.	Type system:	In-line		Side-line	√	Spill Pond							
2.	Number cells:	1											
3.	What unit process does this unit precede?					**centrifuge**							
4.	Is volume adequate:	**0.5 MG**									√		
5.	Mixing?	None		Diffused Air		Fixed Mechanical							
	Floating Mechanical			Other: **Recirculation by pumps**			√						
6.	Condition of mixing equipment	GOOD		AVERAGE		POOR							√
7.	*HOW DRAWN OFF?*												
	Pumped from?	Surface		Sub-surface	√	Adjustable							
	Weir?	Surface		Sub-surface									
8.	Is containment structure in good condition?										√		
9.	Are the facilities to flush solids/grease from basin walls adequate?										√		
10.	Are there facilities for withdrawing floating material and foam?												√
11.	*HOW ARE SOLIDS REMOVED?*												
	Drain down		Drag line		Other:								√
12.	Is solids removal adequate?										√		
13.	Is the emergency overflow in good condition?												√
14.	Are the depth gauges in good condition?												√

GENERAL CONDITION:	GOOD	√	FAIR		POOR	

COMMENTS:	**Bio-solids tank receives waste from the primary settling tanks. The waste activated sludge is sent to the primary tanks first and are, therefore, included with the primary solids when this material is sent to the holding tank.**

UNIT PROCESS:	**BIO-SOLIDS SLUDGE PUMPING CENTRIFUGE FEED PUMPS**

									YES	NO	NA
1.	Number of pumps				**3**						
2.	Number pumps in operation				**1**						
3.	TYPE OF SLUDGE PUMPED:										
	Primary		Waste Activated			Other:	√				
	Secondary		Return Activated			Combination					
4.	TYPE OF PUMP:	Plunger		Diaphragm		Other: **Positive Displacement**	√				
	Centrifugal:		Screwlift		Prog. Cavity						
5.	MODE OF OPERATION:	Manual		Automatic	√	Other:					
6.	Effluent volume pumped:			**0.091 MGD**							
7.	Alarm system for equipment failures/overloads operational?								√		
GENERAL CONDITION:	GOOD	√	FAIR		POOR						
COMMENTS:	**Bio-solids sent to the centrifuges.**										

UNIT PROCESS:	**CENTRIFUGATION**

								YES	NO	NA
1.	Number of units			**3**						
2.	*Number units in operation*			**1**						
3.	*PURPOSE OF CENTRIFUGE*									
	Thickening		Dewatering	√	Other:					
4.	*OPERATION OF EQUIPMENT*									
	Manual	√	Automatic		Other:					
5.	Centrifuge run time		**21.4 hours/day; average 2010**							
6.	Volume of influent sludge flow: (gal/min)		**71; average Dec. 2010**							
7.	Amount of cake produced: (lbs/day)		**12,300; Dec. 2010**							
8.	*SLUDGE SOLIDS*									
	Influent (%)		Effluent (%)	**23.1; Dec. 2010**						
9.	Conditioning chemical fed:		**Z 7553**							
10.	Conditioning chemical dose:		**12 lb/ton; Dec. 2010**							
11.	Centrate return location:		**Head works**							
12.	Signs of centrate return problems?								√	

GENERAL CONDITION:	GOOD	√	FAIR		POOR	

COMMENTS:	

UNIT PROCESS:	**INCINERATION**

							YES	NO	NA
1.	Method:	Multiple Hearth Furnace	√	Fluidized Bed Incinerator					
2.	Number of units	**2**							
3.	Number units in operation	**1**							
4.	*Types of sludge incinerated:*								
	Primary	√	Waste Activated	√	Other:				
5.	Loading rate (wet sludge)	**19,400 lb/day total**							
6.	Range of operating temperature	**1015-1404° F average Dec. 2010**							
7.	Fuel used	Natural gas	Amount	**46,000 ft^3/day**					
8.	Amount of ash generated	**29 yd^3**	Disposal of ash	**landfill**					
9.	Average number of hours of operation per day	**24 hours/day** **29 out of 31 days Dec. 2010**							

GENERAL CONDITION:	GOOD	√	FAIR		POOR	

COMMENTS:	**Ash collected/disposed seven times during the month.**

UNIT PROCESS:	**EFFLUENT/PLANT OUTFALL**

									YES	NO	NA
1.	Type of outfall			Shore Based		Submerged		√			
	TYPE IF SHORE BASED:										
2.	Wingwall		Headwall		Rip Rap		Pipe				√
3.	Flapper valve present?										√
4.	Erosion of bank area?										√
5.	Effluent plume visible?										√
	Condition of outfall and the supporting structure?										
6.	GOOD	**na**	FAIR		POOR						
	FINAL EFFLUENT, EVIDENCE OF FOLLOWING PROBLEMS?										
	Oil sheen?										√
	Grease?										√
	Sludge bar?										√
	Turbid effluent?										√
	Visible foam?										√
7.	Unusual color?										√

GENERAL CONDITION:	GOOD	**na**	FAIR		POOR	

COMMENTS:	**Submerged outfall marked by buoy in the river. Nothing could be observed to report for the above items.**

ATTACHMENT 2

DISCHARGE LOCATION/TOPOGRAPHIC MAP

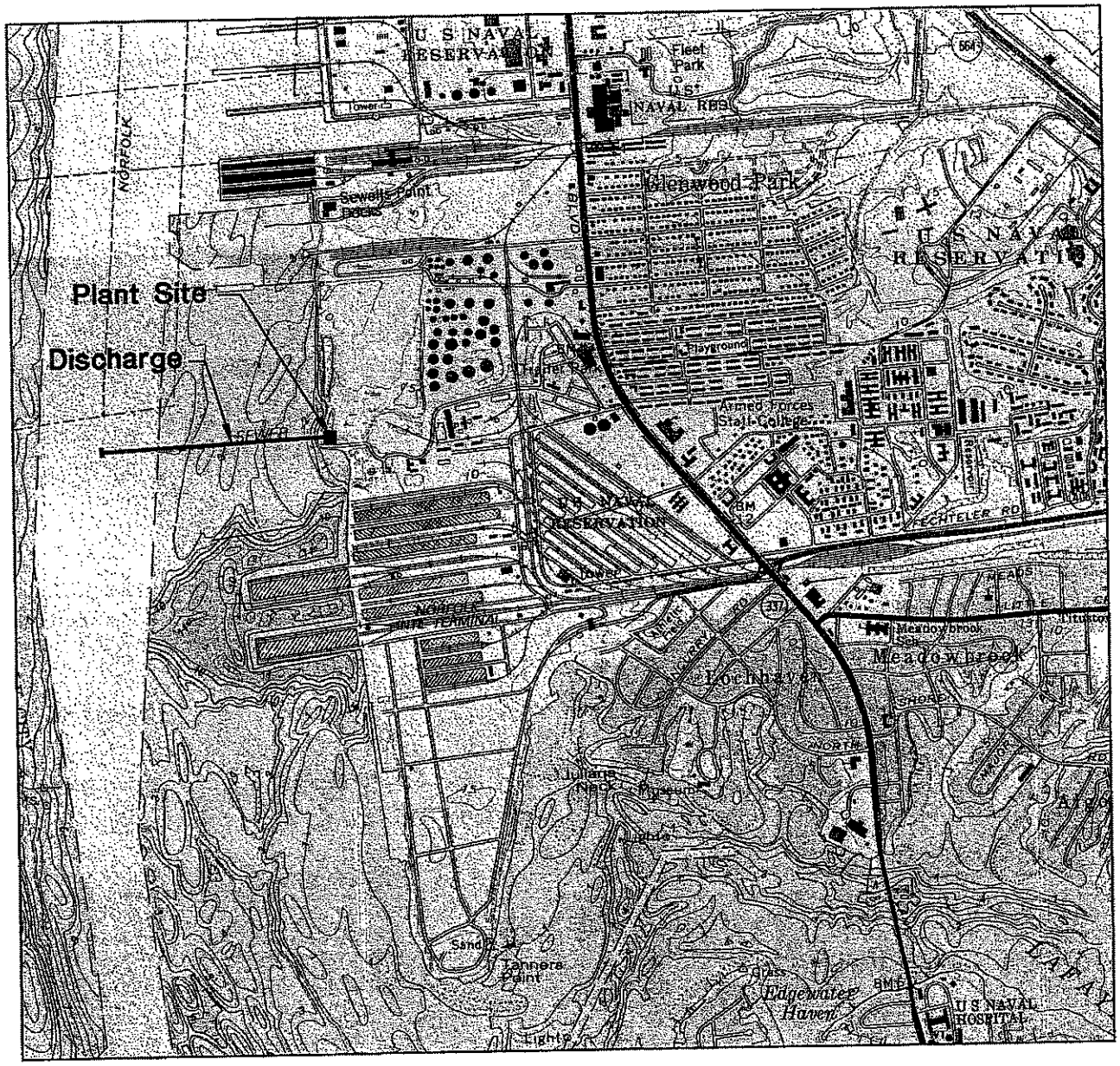

Location Map
for
Army Base TP

June 2003 | Scale: 1"-2000' | USGS Map Reference

ATTACHMENT 3

SCHEMATIC/PLANS & SPECS/SITE MAP/ WATER BALANCE

ARMY BASE TREATMENT PLANT
SOLIDS HANDLING FLOW DIAGRAM
HAMPTON ROADS SANITATION DISTRICT

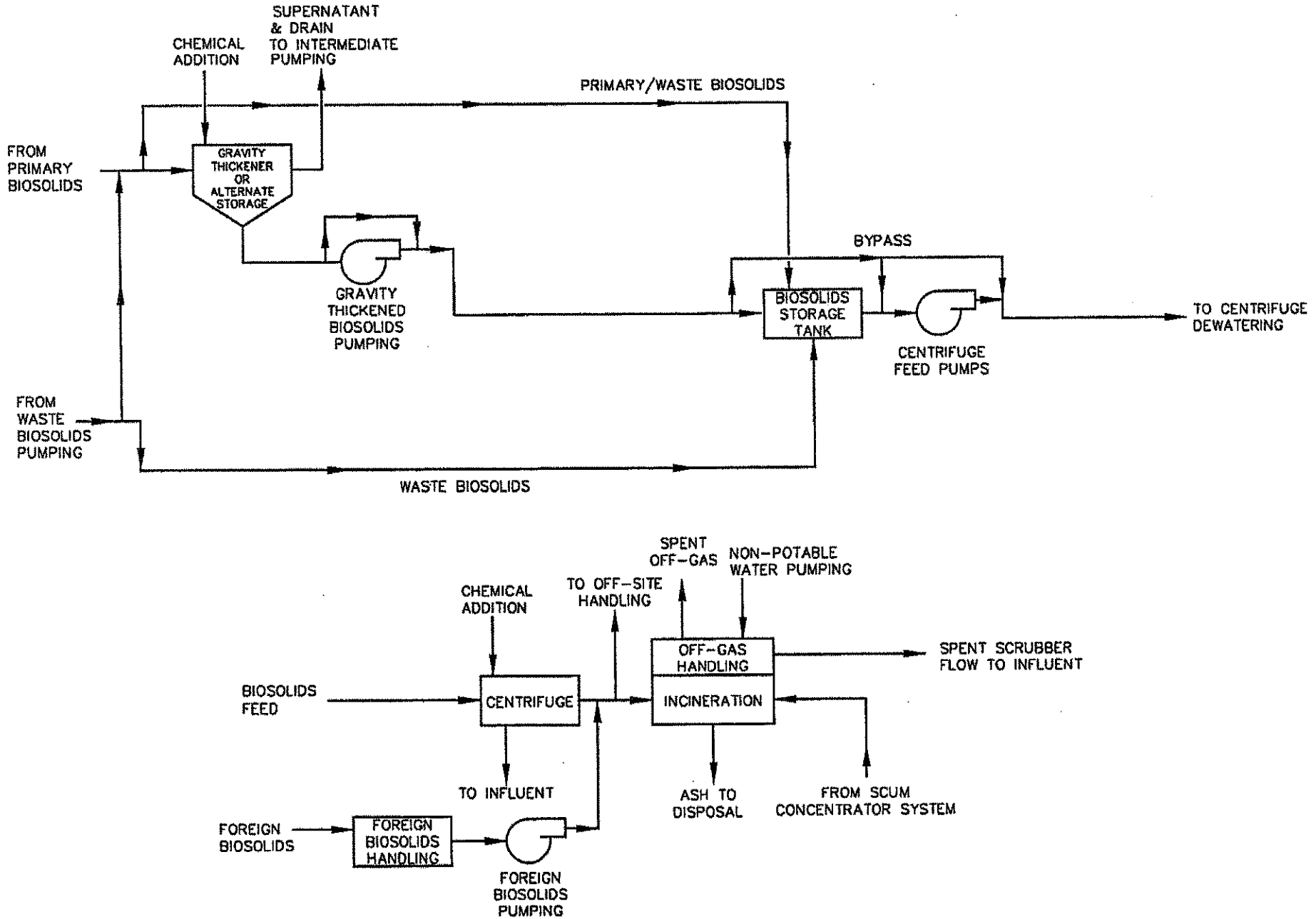

6/18/03
ABTPSHFD.dwg

ARMY BASE TREATMENT PLANT
SEWAGE TREATMENT FLOW DIAGRAM
HAMPTON ROADS SANITATION DISTRICT

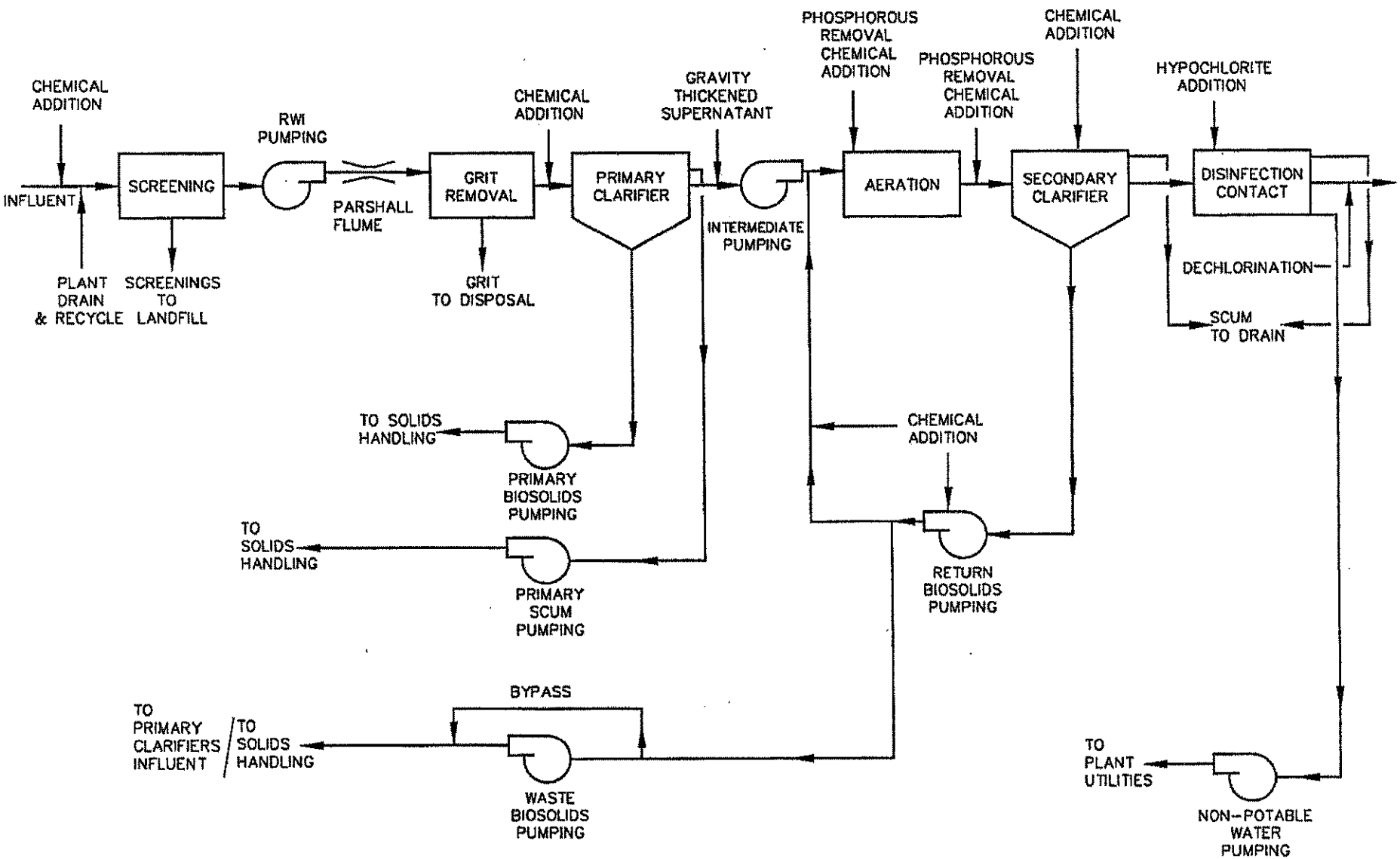

6/18/03
ABTPSTFD.dwg

ARMY BASE TREATMENT PLANT
SOLIDS HANDLING FLOW DIAGRAM
HAMPTON ROADS SANITATION DISTRICT

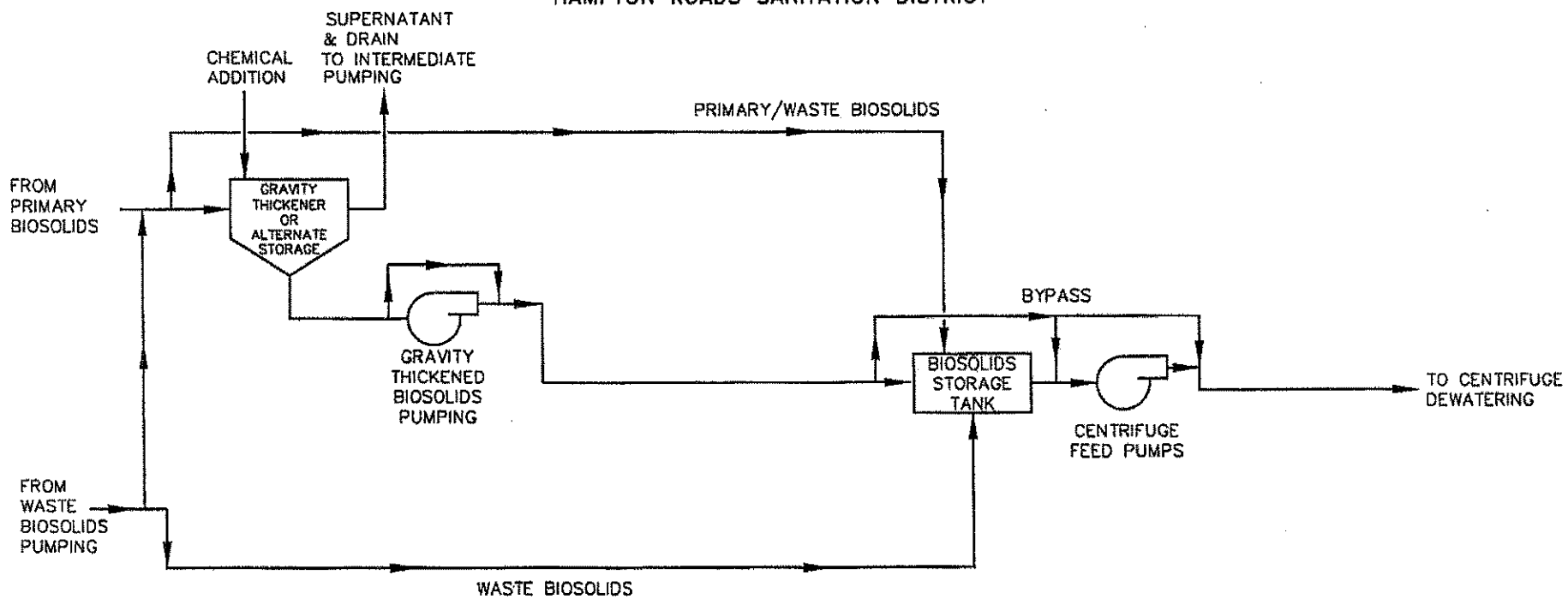

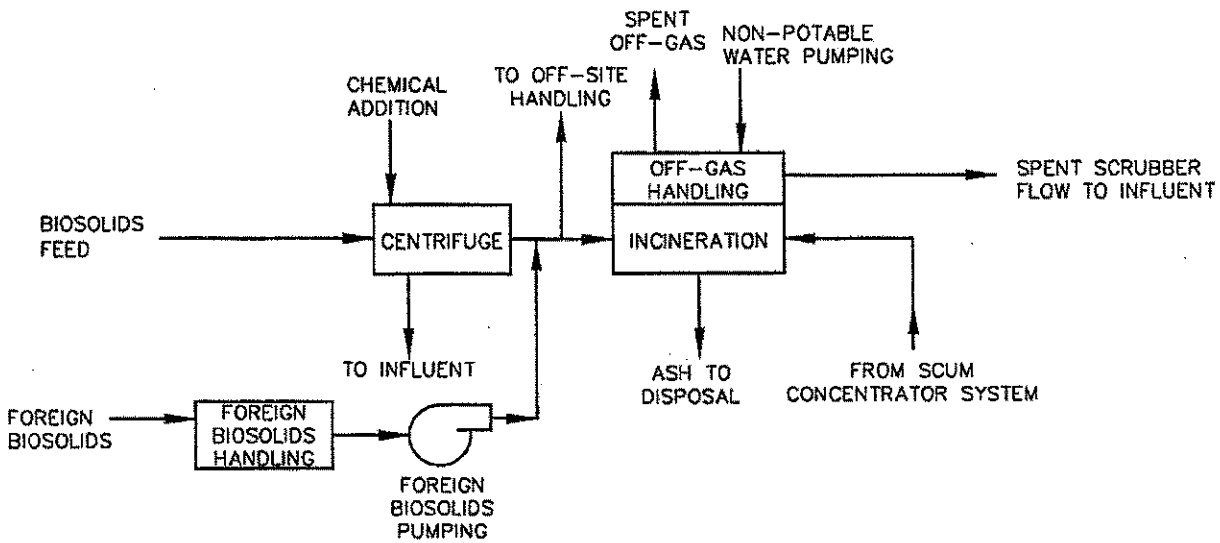

6/18/03
ABTPSHFD.dwg

ARMY BASE TREATMENT PLANT

SITE DRAINAGE MAP

HAMPTON ROADS SANITATION DISTRICT

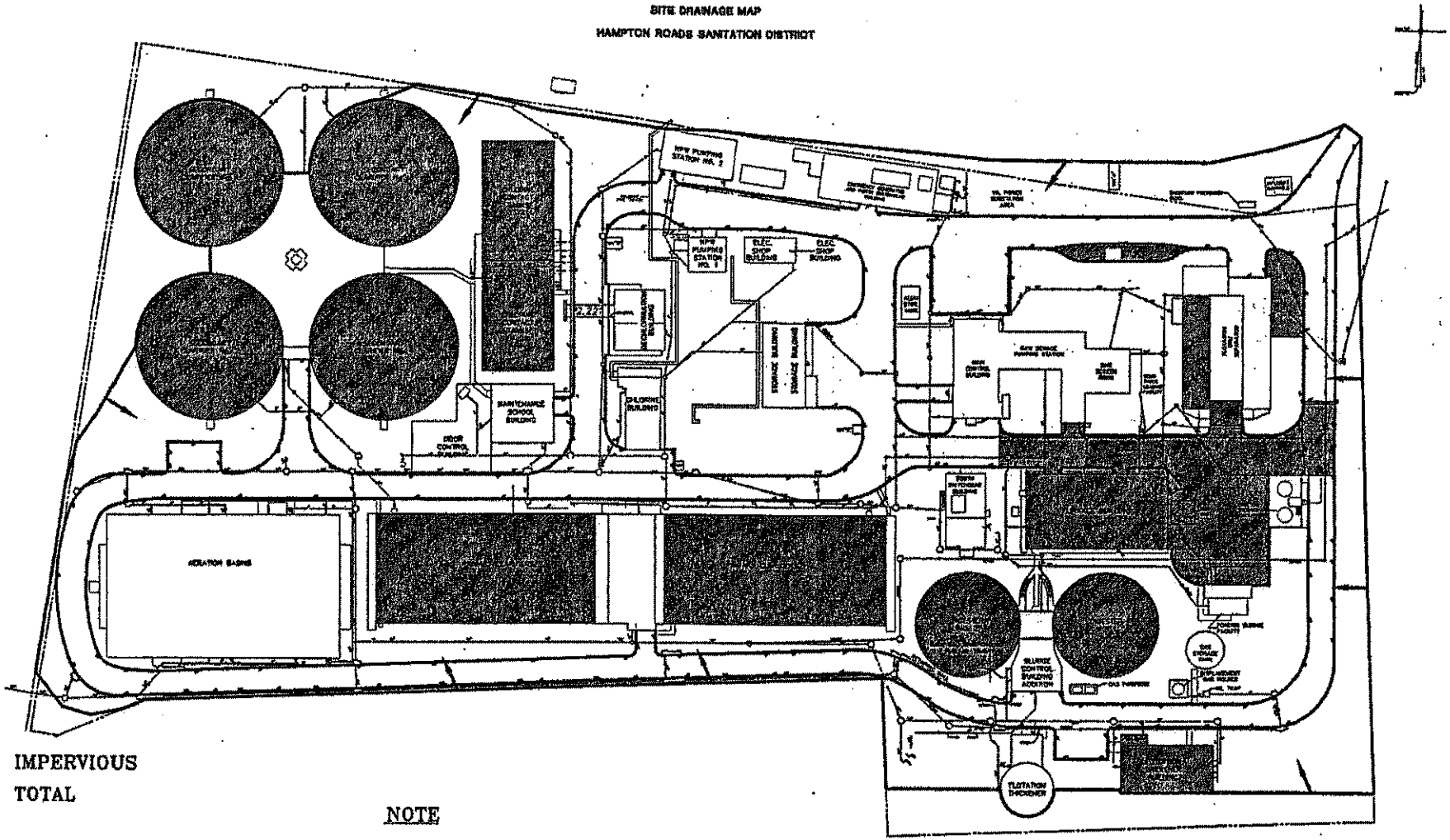

002

No.

148,785 S.F. IMPERVIOUS

292,913 S.F. TOTAL

NOTE

THE SHADED AREAS SHOWN ON THIS PLAN DO NOT DRAIN TO THE OUTFALL. THESE AREAS ARE RETURNED TO THE PLANT FOR TREATMENT.

ATTACHMENT 4

TABLE I - DISCHARGE/OUTFALL DESCRIPTION

TABLE I

NUMBER AND DESCRIPTION OF OUTFALLS

OUTFALL NO.	DISCHARGE LOCATION	DISCHARGE SOURCE (1)	TREATMENT (2)	FLOW (3)
001	365519N/ 0762009W	Publicly Owned Treatment works	Secondary treatment including bar screen, grit removal, primary clarification, secondary clarification, activated sludge, chlorination and dechlorination.	18 MGD
002*	365515N/ 0761945W	Stormwater	Good housekeeping and management, containment of stored materials	0.017 MG

(1) List operations contributing to flow
(2) Give brief description, unit by unit
(3) Give maximum 30-day average flow for industry and design flow for municipal

*Outfall 002 is currently not in use because of construction activities. The outfall will return to discharging stormwater once construction activities have ceased. Construction may not be complete until 2015.

ATTACHMENT 5

TABLE II - EFFLUENT MONITORING/LIMITATIONS

TABLE II - MUNICIPAL EFFLUENT LIMITATIONS/MONITORING

OUTFALL # 001 DESIGN FLOW: 18 MGD
Outfall Description: Treated Municipal wastewater.
SIC CODE: 4952

( ) Final Limits (X) Interim Limits Effective Dates - From: Reissuance Date To: CTO Issuance Date

PARAMETER & UNITS	BASIS FOR LIMITS	DESIGN FLOW MULTIPLIER	EFFLUENT LIMITATIONS				MONITORING REQUIREMENTS	
			MONTHLY AVERAGE	WEEKLY AVERAGE	MINIMUM	MAXIMUM	FREQUENCY	SAMPLE TYPE
Flow (MGD) [a]	3		NL	NA	NA	NL	Continuous	TI & RE*
pH (S.U.)	1		NA	NA	6.0	9.0	1/Day	Grab
BOD5 (mg/l) [c] [d]	1	18	30	45	NA	NA	3/Week	24-Hr. Comp
BOD5 (kg/d) [c] [d]	1	18	2044	3066	NA	NA	3/Week	24-Hr. Comp
TSS (mg/l) [c] [d]	1	18	30	45	NA	NA	3/Week	24-Hr. Comp
TSS (kg/d) [c] [d]	1	18	2044	3066	NA	NA	3/Week	24-Hr. Comp
TRC (mg/l) [b] [c]	2		0.20	2.4	NA	NA	1/Day	Grab
Total Phosphorus (mg/l)	3		NL	NA	NA	NA	1/Month	24-Hr. Comp
Total Phosphorus (mg/l) Year to date [f]	3		NL	NA	NA	NA	1/Month	Calc
Total Phosphorus (mg/l) Calendar Year [e] [f]	3		2.0	NA	NA	NA	1/Year	Calc
Fecal Coliform (n/cml) [d] [g]	2		200	NA	NA	NA	1/Week (Between 10 am & 4 pm)	Grab
Enterococci (n/cml) [h] [	2		35	NA	NA	NA	2/Month (Between 10 am & 4 pm)	Grab

*Totalizing, Indicating & Recording Equipment

NA = NOT APPLICABLE; NL = NO LIMIT, MONITORING REQUIREMENT ONLY

1/Year = January 1 to December 31; reported for each full calendar year.

Upon issuance of the permit, Discharge Monitoring Reports (DMRs) shall be submitted to the regional office at the frequency required by the permit regardless of whether an actual discharge occurs. In the event that there is no discharge for the monitoring period, then "no discharge" shall be reported on the DMR.

In addition to any Total Nitrogen or Total Phosphorus concentration limits listed above, this facility has Total Nitrogen and Total Phosphorus calendar year load limits associated with this outfall included in the current Registration List under registration number VAN040090, enforceable under the General VPDES Watershed Permit Regulation for Total Nitrogen and Total Phosphorus Discharges and Nutrient Trading in the Chesapeake Watershed in Virginia.

[a] The design flow of this treatment facility is 18 MGD. See Part I.C.5 for additional flow requirements.
[b] See Part I.B. for additional chlorine monitoring instructions.
[c] See Parts I.C.6. and I.C.7. for quantification levels and reporting requirements, respectively.
[d] See Part I.C.8. for additional instructions regarding effluent monitoring frequencies.
[e] Annual average limitation, based on a calculation of all samples collected during the calendar year.
[f] See Part I.C.11. for additional instructions regarding Total Phosphorus
[g] Fecal Coliform monthly average is calculated as a geometric mean.
[h] Enterococci monthly average is calculated as a geometric mean. Samples must be taken at least 7 days apart.

There shall be no discharge of floating solids or visible foam in other than trace amounts.

At least 85% removal for BOD and TSS must be attained for this effluent.

The basis for the limitations codes are:
1. Technology (e.g., Federal Effluent Guidelines)
2. Water Quality Standards (9 VAC 25-260 et. seq.)
3. Best Professional Judgment

TABLE II - MUNICIPAL EFFLUENT LIMITATIONS/MONITORING

OUTFALL # 001 DESIGN FLOW: 18 MGD
Outfall Description: Treated Municipal wastewater.
SIC CODE: 4952

(X) Final Limits ( ) Interim Limits Effective Dates - From: CTO Issuance Date To: Expiration Date

PARAMETER & UNITS	BASIS FOR LIMITS	DESIGN FLOW MULTIPLIER	EFFLUENT LIMITATIONS				MONITORING REQUIREMENTS	
			MONTHLY AVERAGE	WEEKLY AVERAGE	MINIMUM	MAXIMUM	FREQUENCY	SAMPLE TYPE
Flow (MGD) [a]	3		NL	NA	NA	NL	Continuous	TI & RE*
pH (S.U.)	1		NA	NA	6.0	9.0	1/Day	Grab
BOD5 (mg/l) [c] [d]	1	18	30	45	NA	NA	3/Week	24-Hr. Comp
BOD5 (kg/d) [c] [d]	1	18	2044	3066	NA	NA	3/Week	24-Hr. Comp
TSS (mg/l) [c] [d]	1	18	30	45	NA	NA	3/Week	24-Hr. Comp
TSS (kg/d) [c] [d]	1	18	2044	3066	NA	NA	3/Week	24-Hr. Comp
TRC (mg/l) [b] [c]	2		0.20	2.4	NA	NA	1/Day	Grab
Total Phosphorus (mg/l)	3		NL	NA	NA	NA	1/Month	24-Hr. Comp
Total Phosphorus (mg/l) Year to date [f]	3		NL	NA	NA	NA	1/Month	Calc
Total Phosphorus (mg/l) Calendar Year [e] [f]	3		1.0	NA	NA	NA	1/Year	Calc
Total Nitrogen (mg/l)	3		NL	NA	NA	NA	1/Month	24-Hr. Comp
Total Nitrogen (mg/l) Year to date [f]	3		NL	NA	NA	NA	1/Month	Calc
Total Nitrogen(mg/l) Calendar Year [e] [f]	3		5.0	NA	NA	NA	1/Year	Calc

PARAMETER & UNITS	BASIS FOR LIMITS	DESIGN FLOW MULTIPLIER	EFFLUENT LIMITATIONS				MONITORING REQUIREMENTS	
			MONTHLY AVERAGE	WEEKLY AVERAGE	MINIMUM	MAXIMUM	FREQUENCY	SAMPLE TYPE
Fecal Coliform (n/cml) [d] [g]	2		200	NA	NA	NA	1/Week (Between 10 am & 4 pm)	Grab
Enterococci (n/cml) [h]	2		35	NA	NA	NA	2/Month (Between 10 am & 4 pm)	Grab

*Totalizing, Indicating & Recording Equipment
NA = NOT APPLICABLE; NL = NO LIMIT, MONITORING REQUIREMENT ONLY

1/Year = January 1 to December 31; reported for each full calendar year.

Upon issuance of the permit, Discharge Monitoring Reports (DMRs) shall be submitted to the regional office at the frequency required by the permit regardless of whether an actual discharge occurs. In the event that there is no discharge for the monitoring period, then "no discharge" shall be reported on the DMR.

In addition to any Total Nitrogen or Total Phosphorus concentration limits listed above, this facility has Total Nitrogen and Total Phosphorus calendar year load limits associated with this outfall included in the current Registration List under registration number VAN040090, enforceable under the General VPDES Watershed Permit Regulation for Total Nitrogen and Total Phosphorus Discharges and Nutrient Trading in the Chesapeake Watershed in Virginia.

[a] The design flow of this treatment facility is 18 MGD. See Part I.C.5 for additional flow requirements.
[b] See Part I.B. for additional chlorine monitoring instructions.
[c] See Parts I.C.6. and I.C.7. for quantification levels and reporting requirements, respectively.
[d] See Part I.C.8. for additional instructions regarding effluent monitoring frequencies.
[e] Annual average limitation, based on a calculation of all samples collected during the calendar year.
[f] See Part I.C.11. for additional instructions regarding Total Phosphorus and Total Nitrogen.
[g] Fecal Coliform monthly average is calculated as a geometric mean.
[h] Enterococci monthly average is calculated as a geometric mean. Samples must be taken at least 7 days apart.

There shall be no discharge of floating solids or visible foam in other than trace amounts.
At least 85% removal for BOD and TSS must be attained for this effluent.

The basis for the limitations codes are:
1. Technology (e.g., Federal Effluent Guidelines)
2. Water Quality Standards (9 VAC 25-260 et. seq.)
3. Best Professional Judgment

TABLE II - STORM WATER EFFLUENT LIMITATIONS/MONITORING

OUTFALLS #002
Outfall Description: Stormwater Not Associated With Regulated Industrial Activity
SIC CODE: 4952

THIS OUTFALL SHALL CONTAIN STORM WATER RUNOFF NOT ASSOCIATED WITH A REGULATED INDUSTRIAL ACTIVITY WHERE NO MONITORING IS REQUIRED. THERE SHALL BE NO DISCHARGE OF PROCESS WASTEWATER FROM THIS OUTFALL.

No exposure status has been given to this outfall.

TABLE II - MUNICIPAL MINOR EFFLUENT LIMITATIONS
Attachment 5 continued

Final Chlorine Limitations Effective Dates - From: Permit Issuance To: Permit Expiration

TRC **	AFTER CL2 CONTACT TANK (Dechlor. Required)			AFTER DECHLORINATION		AFTER CL2 CONTACT TANK (Dechlor. Not Required)				
	MIN.	EXC.	INST. MIN.	WKLY AVG.	INST. MAX.	PERMIT RANGE	EXC.	REPORT-ING RANGE	EXC.	TECH. MAX.
a) Non-Detect. Dechlor. Required	---	---	---	---	---	NA	NA	NA	NA	NA
b) Detect. Dechlor. Required	**0.50 mg/l**	**36**	**0.5 mg/l***	**2.4 mg/l**	---	NA	NA	NA	NA	NA
c) No Dechlor.	NA	NA	NA	NA	NA	---	---	---	---	---

* Reporting is required when 3 or more consecutive readings are <0.5 mg/l or when the TRC is <0.1 mg/l.

** --Chlorine mass balance Cw (W for Tidal systems): check one

____a) $C_w < 0.1$ mg/l [dechlor. required, non-detectable format]

_X_b) 0.1 mg/l $\leq C_w < 2.0$ mg/l (2.5 mg/l for PWS, Shellfish waters) [dechlor. required, detectable format]

____ c) $C_w > 2.0$ mg/l (2.5 mg/l for PWS, Shellfish waters) [dechlor. not required, include a restrictive technology max. value]

The design flow of this treatment facility is 18 MGD.

NA = NOT APPLICABLE; NL = NO LIMIT, MONITORING REQUIREMENT ONLY

See Part I.B. for additional TRC limitations.

ATTACHMENT 6

EFFLUENT LIMITATIONS/MONITORING RATIONALE/SUITABLE DATA/ ANTIDEGRADATION/ANTIBACKSLIDING

HRSD Army Base STP
Rationale For Parameters, Limitations, And Sampling Requirements
Outfall 001

Flow: No limit, monitoring is required with continuous, totalizing, indicating or recording equipment. This based on the VPDES Permit Manual, and is standard for sanitary wastewater plants with discharges greater than 2 MGD. The design flow of 18 MGD is the baseline for the 95% design flow capacity notification.

pH: Minimum limit of 6.0 and maximum of 9.0 S.U. These limits are based on Federal Effluent Guidelines (40 CFR 133.102) and Water Quality Standards in 9 VAC 25-260-50, which limits pH to the range above for coastal waters of the State. Monitoring is a daily grab sample and is standard for sanitary WW plants with discharges greater than 2 MGD.

Biochemical Oxygen Demand: Monthly average of 30 mg/l and 2044 kg/day and a weekly average of 45 mg/l and 3066 kg/day. This is based on Federal Effluent Guidelines (40 CFR 133.102) which sets the limits for secondary WW plants. Loading limits are in whole numbers based upon the latest DEQ significant figures guidance (06-2016). Monitoring required is a 24 hour composite, 3 days a week. The frequency is based upon previous permit reissuances where DEQ guidance document 98-2005 was used to decrease the monitoring frequency to 3 days/week. This will be carried forward for this reissuance.

Total Suspended Solids: Monthly average of 30 mg/l and 2044 kg/day and a weekly average of 45 mg/l and 3066 kg/day. This is based on Federal Effluent Guidelines (40 CFR 133.102) which sets the limits for secondary WW plants. Loading limits are in whole numbers based upon the latest DEQ significant figures guidance (06-2016). Monitoring required is a 24 hour composite, 3 days a week. The frequency is based upon previous permit reissuances where DEQ guidance document 98-2005 was used to decrease the monitoring frequency to 3 days/week. This will be carried forward for this reissuance.

Total Residual Contact Chlorine: Minimum limit after contact time is 0.50 mg/l with 36 exceptions. This value was determined from the HRSD Chlorine Reduction Test which was approved by DEQ in February 1997. In addition, it follows the requirements of the VPDES permit manual. These process monitoring limits are believed necessary to ensure proper disinfection. Monitoring required is a grab sample once every two hours. This is based on the VPDES Permit Manual and is standard for municipal discharges of > 2.0 MGD to nutrient enriched waters.
A special condition requires reporting if the chlorine concentration falls below 0.5 mg/l or chlorination is lost(<0.10 mg/l).

Final Total Residual Chlorine: A weekly average of 2.4 mg/l. A monthly average of 0.20 mg/l. This is a technology based limit following guidance document 00-2011 and is carried forward from the current permit. Monitoring is required once/day by grab sample. The frequency is based on the VPDES permit manual and is standard for municipal discharges of >2.0 MGD.

Fecal Coliform: Monthly average of 200 n/cml. This is based on Water Quality Standards (9 VAC 25-260-160) and is believed protective of instream standards. Monitoring required is a grab sample once a week. The VPDES Manual allows reduction to this frequency based on long term average discharge values in relation to the monthly average limit. Current guidance requires fecal coliform monitoring in salt or transition waters if the discharge is to shellfish waters. BPJ determines that this frequency is adequate to determine compliance with the standard.

Enterococci: A monthly average limit of 35 n/cml is included per water quality standards. Sampling is required 2/Month to be calculated as a geometric mean. Samples must be taken at least 7 days apart. This is carried forward from the current permit. Enterococci was added at the time the last permit reissuance due to Enterococci monitoring becoming an issue that EPA addressed in late 2007/early 2008.

Total Phosphorus Calendar Year An annual average concentration limit of 2.0 mg/l is placed in the permit with monitoring on an annual basis. This is an interim limit. An annual average concentration limit of 1.0 mg/l is placed in the permit with monitoring on an annual basis as a final limit based upon the CTO issuance date. The final limit of 1.0 mg/l was added during a modification under the recent permit term based upon the CTC issuance date of 2/5/10 for a nutrient upgrade to the plant. Additional nutrient monitoring and reporting is covered under the General VPDES Watershed Permit for Total Nitrogen and Total Phosphorus. The Army Base HRSD facility is covered under VAN040090. On 5/16/07 guidance document 07-2008 was released by DEQ Central Office for the implementation of the nutrient general permit in relation to the individual permit.

Total Phosphorus Year-to-Date There is no limit for the monthly average TP Year-to-date parameter. This parameter was added to the permit in accordance with guidance document 07-2008. Reporting is 1/M and is a calculation. Data for this parameter is collected in accordance with the VPDES permit VAN040090 for the James River Watershed held by HRSD.

Total Phosphorus There is no limit for the monthly average phosphorus parameter. This parameter was added to the permit in accordance with guidance document 07-2008. Reporting is 1/M. Data for this parameter is collected in accordance with the VPDES permit VAN040090 for the James River Watershed. Reporting for this parameter is required in the individual permit (IP) because the annual concentration limits is contained in the IP. All data used to calculate and determine compliance with the limit in the IP needs to be in the same document and reported on the same form as the limit.

Total Nitrogen Calendar Year	A limit of 5.0 mg/l will be added for Total Nitrogen as a final limit. Part I Section C.4 of the permit states that upon issuance of a CTC, DEQ staff shall initiate modification of this permit to include annual concentrations limits based on the nutrient removal technologies listed in the CTC. The CTC for this facility was issued on 2/5/10 by DEQ office of wastewater engineering staff and the permit was modified in 2010 to include this limit. Once the CTO is issued the limit will become effective. The CTO may not be issued until sometime in 2015.
Total Nitrogen Year-to-Date	There is no limit for the monthly average TN Year-to-date parameter. This parameter was added to the permit in accordance with guidance document 07-2008. Reporting is 1/M and is a calculation. Data for this parameter is collected in accordance with the VPDES permit VAN040090 for the James River Watershed held by HRSD. No reporting is required until the CTO for the nutrient removal is issued.
Total Nitrogen	There will be no limit for the monthly average nitrogen. This parameter was added to the permit in accordance with guidance document 07-2008. Reporting will be 1/M. Data for this parameter is collected in accordance with the VPDES permit VAN040090 for the James River Watershed. Reporting for this parameter is required in the individual permit (IP) because the annual concentration limits is contained in the IP. All data used to calculate and determine compliance with the limit in the IP needs to be in the same document and reported on the same form as the limit. No reporting is required until the CTO for the nutrient removal is issued.

Water Quality Standards Reasonable Potential

Zinc, Nickel, and Ammonia all had a quantifiable concentration for the data gathered for the 2012 application. However, these data points were significantly below the most limiting wasteload allocations found in the attached wasteload allocation analysis. No limits were needed for these parameters.
All other water quality parameters reported on Form 2A were below the quantification levels. No additional limits are needed at this time.

Mixing Zone Analysis

A dilution study was submitted for this facility on 6/29/04. The acute dilution ratio of 65:1 and a chronic dilution ratio of 200:1 were approved by DEQ Central Office.

Stormwater

Outfall 002 discharges stormwater from the plant (industrial) area. This outfall is currently in a construction area that is torn up and is not available for sampling. This outfall was labeled as "no exposure" during the last permit term where HRSD met the requirements for industrial "no exposure", thereby only discharging stormwater <u>not associated</u> with an industrial activity. Based upon site design this outfall will have "no exposure" once construction is complete as well. The "no exposure" certification form is attached to the section.

Permit No	Parameter Description	QTYAVG	QTYMAX	CONCMIN	CONCAVG	CONCMAX	Start Date	End Date
VA0081230	FLOW	9.78	11.04				1-Feb-08	29-Feb-08
VA0081230	PH			6.8		7.1	1-Feb-08	29-Feb-08
VA0081230	BOD5	609	758		16	20	1-Feb-08	29-Feb-08
VA0081230	TSS	774	999		21	26	1-Feb-08	29-Feb-08
VA0081230	COLIFORM, FECAL				12		1-Feb-08	29-Feb-08
VA0081230	TP mg/l				0.60		1-Feb-08	29-Feb-08
VA0081230	CL2, TOTAL CONTACT			0.09			1-Feb-08	29-Feb-08
VA0081230	CL2, TOTAL FINAL				0.0034	0.0	1-Feb-08	29-Feb-08
VA0081230	TP mg/l YTD				0.55		1-Feb-08	29-Feb-08
VA0081230	FLOW	9.65	11.08				1-Mar-08	31-Mar-08
VA0081230	PH			6.6		7.1	1-Mar-08	31-Mar-08
VA0081230	BOD5	504	773		14	20	1-Mar-08	31-Mar-08
VA0081230	TSS	526	904		14	23	1-Mar-08	31-Mar-08
VA0081230	COLIFORM, FECAL				9		1-Mar-08	31-Mar-08
VA0081230	TP mg/l				0.78		1-Mar-08	31-Mar-08
VA0081230	CL2, TOTAL CONTACT			0.11			1-Mar-08	31-Mar-08
VA0081230	CL2, TOTAL FINAL				<QL	<QL	1-Mar-08	31-Mar-08
VA0081230	TP mg/l YTD				0.62		1-Mar-08	31-Mar-08
VA0081230	FLOW	10.34	14.42				1-Apr-08	30-Apr-08
VA0081230	PH			6.7		7.1	1-Apr-08	30-Apr-08
VA0081230	BOD5	819	816		20	20	1-Apr-08	30-Apr-08
VA0081230	TSS	1164	1252		29	31	1-Apr-08	30-Apr-08
VA0081230	COLIFORM, FECAL				24		1-Apr-08	30-Apr-08
VA0081230	TP mg/l				1.03		1-Apr-08	30-Apr-08
VA0081230	CL2, TOTAL CONTACT			0.03			1-Apr-08	30-Apr-08
VA0081230	CL2, TOTAL FINAL				<QL	<QL	1-Apr-08	30-Apr-08
VA0081230	TP mg/l YTD				0.73		1-Apr-08	30-Apr-08
VA0081230	FLOW	9.71	10.64				1-May-08	31-May-08
VA0081230	PH			6.9		7.3	1-May-08	31-May-08
VA0081230	BOD5	460	597		12	16	1-May-08	31-May-08
VA0081230	TSS	482	808		13	21	1-May-08	31-May-08
VA0081230	COLIFORM, FECAL				7		1-May-08	31-May-08
VA0081230	TP mg/l				0.59		1-May-08	31-May-08
VA0081230	CL2, TOTAL CONTACT			0.37			1-May-08	31-May-08
VA0081230	CL2, TOTAL FINAL				<QL	<QL	1-May-08	31-May-08
VA0081230	TP mg/l YTD				0.70		1-May-08	31-May-08
VA0081230	FLOW	9.38	10.34				1-Jun-08	30-Jun-08
VA0081230	PH			6.8		7.2	1-Jun-08	30-Jun-08
VA0081230	BOD5	426	496		12	14	1-Jun-08	30-Jun-08
VA0081230	TSS	310	393		8.7	11	1-Jun-08	30-Jun-08
VA0081230	COLIFORM, FECAL				13		1-Jun-08	30-Jun-08
VA0081230	TP mg/l				0.96		1-Jun-08	30-Jun-08
VA0081230	CL2, TOTAL CONTACT			0.07			1-Jun-08	30-Jun-08
VA0081230	CL2, TOTAL FINAL				<QL	<QL	1-Jun-08	30-Jun-08
VA0081230	TP mg/l YTD				0.74		1-Jun-08	30-Jun-08
VA0081230	FLOW	9.72	11.79				1-Jul-08	31-Jul-08
VA0081230	PH			7.0		7.2	1-Jul-08	31-Jul-08
VA0081230	BOD5	282	337		8	9	1-Jul-08	31-Jul-08
VA0081230	TSS	228	270		6.2	7.4	1-Jul-08	31-Jul-08
VA0081230	COLIFORM, FECAL				2		1-Jul-08	31-Jul-08
VA0081230	TP mg/l				0.87		1-Jul-08	31-Jul-08
VA0081230	ENTEROCOCCI				1		1-Jul-08	31-Jul-08
VA0081230	CL2, TOTAL CONTACT			0.05			1-Jul-08	31-Jul-08
VA0081230	CL2, TOTAL FINAL				<QL	<QL	1-Jul-08	31-Jul-08
VA0081230	TP mg/l YTD				0.76		1-Jul-08	31-Jul-08
VA0081230	FLOW	9.43	10.72				1-Aug-08	31-Aug-08
VA0081230	PH			6.9		7.2	1-Aug-08	31-Aug-08
VA0081230	BOD5	188	202		5	6	1-Aug-08	31-Aug-08
VA0081230	TSS	177	186		5.0	5.2	1-Aug-08	31-Aug-08
VA0081230	COLIFORM, FECAL				1		1-Aug-08	31-Aug-08
VA0081230	TP mg/l				0.69		1-Aug-08	31-Aug-08

VA0081230	ENTEROCOCCI				1		1-Aug-08	31-Aug-08
VA0081230	CL2, TOTAL CONTACT			0.17			1-Aug-08	31-Aug-08
VA0081230	CL2, TOTAL FINAL				<QL	<QL	1-Aug-08	31-Aug-08
VA0081230	TP mg/l YTD				0.75		1-Aug-08	31-Aug-08
VA0081230	FLOW	9.60	13.58				1-Sep-08	30-Sep-08
VA0081230	PH			6.9		7.3	1-Sep-08	30-Sep-08
VA0081230	BOD5	245	292		7	8	1-Sep-08	30-Sep-08
VA0081230	TSS	197	224		5.4	6.0	1-Sep-08	30-Sep-08
VA0081230	COLIFORM, FECAL				2		1-Sep-08	30-Sep-08
VA0081230	TP mg/l				0.79		1-Sep-08	30-Sep-08
VA0081230	ENTEROCOCCI				2		1-Sep-08	30-Sep-08
VA0081230	CL2, TOTAL CONTACT			0.21			1-Sep-08	30-Sep-08
VA0081230	CL2, TOTAL FINAL				<QL	<QL	1-Sep-08	30-Sep-08
VA0081230	TP mg/l YTD				0.75		1-Sep-08	30-Sep-08
VA0081230	FLOW	9.03	9.92				1-Oct-08	31-Oct-08
VA0081230	PH			6.9		7.2	1-Oct-08	31-Oct-08
VA0081230	BOD5	270	300		8	9	1-Oct-08	31-Oct-08
VA0081230	TSS	226	284		6.6	8.3	1-Oct-08	31-Oct-08
VA0081230	COLIFORM, FECAL				2		1-Oct-08	31-Oct-08
VA0081230	TP mg/l				0.57		1-Oct-08	31-Oct-08
VA0081230	ENTEROCOCCI				2		1-Oct-08	31-Oct-08
VA0081230	CL2, TOTAL CONTACT			0.25			1-Oct-08	31-Oct-08
VA0081230	CL2, TOTAL FINAL				<QL	<QL	1-Oct-08	31-Oct-08
VA0081230	TP mg/l YTD				0.74		1-Oct-08	31-Oct-08
VA0081230	FLOW	9.04	10.05				1-Nov-08	30-Nov-08
VA0081230	PH			6.8		7.1	1-Nov-08	30-Nov-08
VA0081230	BOD5	254	283		7	8	1-Nov-08	30-Nov-08
VA0081230	TSS	273	309		7.9	9.0	1-Nov-08	30-Nov-08
VA0081230	COLIFORM, FECAL				5		1-Nov-08	30-Nov-08
VA0081230	TP mg/l				0.62		1-Nov-08	30-Nov-08
VA0081230	ENTEROCOCCI				1		1-Nov-08	30-Nov-08
VA0081230	CL2, TOTAL CONTACT			0.40			1-Nov-08	30-Nov-08
VA0081230	CL2, TOTAL FINAL				<QL	<QL	1-Nov-08	30-Nov-08
VA0081230	TP mg/l YTD				0.73		1-Nov-08	30-Nov-08
VA0081230	FLOW	9.75	11.84				1-Dec-08	31-Dec-08
VA0081230	PH			6.8		7.0	1-Dec-08	31-Dec-08
VA0081230	BOD5	316	338		9	9	1-Dec-08	31-Dec-08
VA0081230	TSS	403	481		11	12	1-Dec-08	31-Dec-08
VA0081230	COLIFORM, FECAL				3		1-Dec-08	31-Dec-08
VA0081230	TP mg/l				0.46		1-Dec-08	31-Dec-08
VA0081230	ENTEROCOCCI				1		1-Dec-08	31-Dec-08
VA0081230	CL2, TOTAL CONTACT			0.20			1-Dec-08	31-Dec-08
VA0081230	CL2, TOTAL FINAL				<QL	<QL	1-Dec-08	31-Dec-08
VA0081230	TP mg/l YTD				0.70		1-Dec-08	31-Dec-08
VA0081230	TP mg/l Annual Avg				0.70		1-Dec-08	31-Dec-08
VA0081230	FLOW	9.62	10.47				1-Jan-09	31-Jan-09
VA0081230	PH			6.9		7.2	1-Jan-09	31-Jan-09
VA0081230	BOD5	311	419		8	11	1-Jan-09	31-Jan-09
VA0081230	TSS	312	404		8.5	11	1-Jan-09	31-Jan-09
VA0081230	COLIFORM, FECAL				9		1-Jan-09	31-Jan-09
VA0081230	TP mg/l				0.57		1-Jan-09	31-Jan-09
VA0081230	ENTEROCOCCI				2		1-Jan-09	31-Jan-09
VA0081230	CL2, TOTAL CONTACT			0.57			1-Jan-09	31-Jan-09
VA0081230	CL2, TOTAL FINAL				<QL	<QL	1-Jan-09	31-Jan-09
VA0081230	TP mg/l YTD				0.57		1-Jan-09	31-Jan-09
VA0081230	FLOW	9.91	10.43				1-Feb-09	28-Feb-09
VA0081230	PH			6.9		7.1	1-Feb-09	28-Feb-09
VA0081230	BOD5	357	425		9	11	1-Feb-09	28-Feb-09
VA0081230	TSS	326	355		8.6	9.2	1-Feb-09	28-Feb-09
VA0081230	COLIFORM, FECAL				7		1-Feb-09	28-Feb-09
VA0081230	TP mg/l				0.58		1-Feb-09	28-Feb-09
VA0081230	ENTEROCOCCI				1		1-Feb-09	28-Feb-09

VA0081230	CL2, TOTAL CONTACT			0.40			1-Feb-09	28-Feb-09
VA0081230	CL2, TOTAL FINAL				<QL	<QL	1-Feb-09	28-Feb-09
VA0081230	TP mg/l YTD				0.57		1-Feb-09	28-Feb-09
VA0081230	FLOW	12.60	15.66				1-Mar-09	31-Mar-09
VA0081230	PH			6.8		7.1	1-Mar-09	31-Mar-09
VA0081230	BOD5	467	468		10	10	1-Mar-09	31-Mar-09
VA0081230	TSS	466	467		9.6	10	1-Mar-09	31-Mar-09
VA0081230	COLIFORM, FECAL				3		1-Mar-09	31-Mar-09
VA0081230	TP mg/l				0.49		1-Mar-09	31-Mar-09
VA0081230	ENTEROCOCCI				2		1-Mar-09	31-Mar-09
VA0081230	CL2, TOTAL CONTACT			0.34			1-Mar-09	31-Mar-09
VA0081230	CL2, TOTAL FINAL				<QL	<QL	1-Mar-09	31-Mar-09
VA0081230	TP mg/l YTD				0.55		1-Mar-09	31-Mar-09
VA0081230	FLOW	11.96	13.66				1-Apr-09	30-Apr-09
VA0081230	PH			6.6		7.1	1-Apr-09	30-Apr-09
VA0081230	BOD5	522	581		12	12	1-Apr-09	30-Apr-09
VA0081230	TSS	485	587		11	12	1-Apr-09	30-Apr-09
VA0081230	COLIFORM, FECAL				7		1-Apr-09	30-Apr-09
VA0081230	TP mg/l				0.99		1-Apr-09	30-Apr-09
VA0081230	ENTEROCOCCI				3		1-Apr-09	30-Apr-09
VA0081230	CL2, TOTAL CONTACT			0.52			1-Apr-09	30-Apr-09
VA0081230	CL2, TOTAL FINAL				<QL	<QL	1-Apr-09	30-Apr-09
VA0081230	TP mg/l YTD				0.66		1-Apr-09	30-Apr-09
VA0081230	FLOW	11.67	12.95				1-May-09	31-May-09
VA0081230	PH			6.8		7.0	1-May-09	31-May-09
VA0081230	BOD5	486	640		11	14	1-May-09	31-May-09
VA0081230	TSS	526	616		12	14	1-May-09	31-May-09
VA0081230	COLIFORM, FECAL				22		1-May-09	31-May-09
VA0081230	TP mg/l				0.86		1-May-09	31-May-09
VA0081230	ENTEROCOCCI				8		1-May-09	31-May-09
VA0081230	CL2, TOTAL CONTACT			0.50			1-May-09	31-May-09
VA0081230	CL2, TOTAL FINAL				<QL	<QL	1-May-09	31-May-09
VA0081230	TP mg/l YTD				0.70		1-May-09	31-May-09
VA0081230	FLOW	12.15	15.46				1-Jun-09	30-Jun-09
VA0081230	PH			6.7		7.1	1-Jun-09	30-Jun-09
VA0081230	BOD5	532	642		12	14	1-Jun-09	30-Jun-09
VA0081230	TSS	621	964		14	20	1-Jun-09	30-Jun-09
VA0081230	COLIFORM, FECAL				8		1-Jun-09	30-Jun-09
VA0081230	TP mg/l				0.81		1-Jun-09	30-Jun-09
VA0081230	ENTEROCOCCI				3		1-Jun-09	30-Jun-09
VA0081230	CL2, TOTAL CONTACT			0.49			1-Jun-09	30-Jun-09
VA0081230	CL2, TOTAL FINAL				<QL	<QL	1-Jun-09	30-Jun-09
VA0081230	TP mg/l YTD				0.72		1-Jun-09	30-Jun-09
VA0081230	FLOW	10.64	11.11				1-Jul-09	31-Jul-09
VA0081230	PH			6.7		7.2	1-Jul-09	31-Jul-09
VA0081230	BOD5	337	334		8	8	1-Jul-09	31-Jul-09
VA0081230	TSS	310	355		7.7	8.7	1-Jul-09	31-Jul-09
VA0081230	COLIFORM, FECAL				3		1-Jul-09	31-Jul-09
VA0081230	TP mg/l				0.90		1-Jul-09	31-Jul-09
VA0081230	ENTEROCOCCI				2		1-Jul-09	31-Jul-09
VA0081230	CL2, TOTAL CONTACT			0.54			1-Jul-09	31-Jul-09
VA0081230	CL2, TOTAL FINAL				<QL	<QL	1-Jul-09	31-Jul-09
VA0081230	TP mg/l YTD				0.74		1-Jul-09	31-Jul-09
VA0081230	FLOW	11.35	13.19				1-Aug-09	31-Aug-09
VA0081230	PH			6.7		7.1	1-Aug-09	31-Aug-09
VA0081230	BOD5	430	566		10	13	1-Aug-09	31-Aug-09
VA0081230	TSS	391	427		9.0	10	1-Aug-09	31-Aug-09
VA0081230	COLIFORM, FECAL				3		1-Aug-09	31-Aug-09
VA0081230	TP mg/l				0.63		1-Aug-09	31-Aug-09
VA0081230	ENTEROCOCCI				1		1-Aug-09	31-Aug-09
VA0081230	CL2, TOTAL CONTACT			0.37			1-Aug-09	31-Aug-09
VA0081230	CL2, TOTAL FINAL				0.0035	<QL	1-Aug-09	31-Aug-09

VA0081230	TP mg/l YTD				0.73		1-Aug-09	31-Aug-09
VA0081230	FLOW	13.33	22.95				1-Sep-09	30-Sep-09
VA0081230	PH			6.8		7.1	1-Sep-09	30-Sep-09
VA0081230	BOD5	312	379		6	6	1-Sep-09	30-Sep-09
VA0081230	TSS	386	610		7.3	9.1	1-Sep-09	30-Sep-09
VA0081230	COLIFORM, FECAL				5		1-Sep-09	30-Sep-09
VA0081230	TP mg/l				0.68		1-Sep-09	30-Sep-09
VA0081230	ENTEROCOCCI				1		1-Sep-09	30-Sep-09
VA0081230	CL2, TOTAL CONTACT			0.58			1-Sep-09	30-Sep-09
VA0081230	CL2, TOTAL FINAL				0.017	0.059	1-Sep-09	30-Sep-09
VA0081230	TP mg/l YTD				0.72		1-Sep-09	30-Sep-09
VA0081230	FLOW	11.35	13.30				1-Oct-09	31-Oct-09
VA0081230	PH			6.8		7.1	1-Oct-09	31-Oct-09
VA0081230	BOD5	314	377		7	9	1-Oct-09	31-Oct-09
VA0081230	TSS	431	699		9.9	17	1-Oct-09	31-Oct-09
VA0081230	COLIFORM, FECAL				5		1-Oct-09	31-Oct-09
VA0081230	TP mg/l				0.81		1-Oct-09	31-Oct-09
VA0081230	ENTEROCOCCI				1		1-Oct-09	31-Oct-09
VA0081230	CL2, TOTAL CONTACT			0.51			1-Oct-09	31-Oct-09
VA0081230	CL2, TOTAL FINAL				<QL	<QL	1-Oct-09	31-Oct-09
VA0081230	TP mg/l YTD				0.73		1-Oct-09	31-Oct-09
VA0081230	FLOW	15.40	35.00				1-Nov-09	30-Nov-09
VA0081230	PH			6.5		7.1	1-Nov-09	30-Nov-09
VA0081230	BOD5	632	1590		10	20	1-Nov-09	30-Nov-09
VA0081230	TSS	754	1629		11	20	1-Nov-09	30-Nov-09
VA0081230	COLIFORM, FECAL				33		1-Nov-09	30-Nov-09
VA0081230	TP mg/l				0.42		1-Nov-09	30-Nov-09
VA0081230	ENTEROCOCCI				4		1-Nov-09	30-Nov-09
VA0081230	CL2, TOTAL CONTACT			0.55			1-Nov-09	30-Nov-09
VA0081230	CL2, TOTAL FINAL				0.032	0.069	1-Nov-09	30-Nov-09
VA0081230	TP mg/l YTD				0.70		1-Nov-09	30-Nov-09
VA0081230	FLOW	17.27	26.55				1-Dec-09	31-Dec-09
VA0081230	PH			6.7		6.9	1-Dec-09	31-Dec-09
VA0081230	BOD5	526	298		8	9	1-Dec-09	31-Dec-09
VA0081230	TSS	698	838		11	13	1-Dec-09	31-Dec-09
VA0081230	COLIFORM, FECAL				7		1-Dec-09	31-Dec-09
VA0081230	TP mg/l				0.48		1-Dec-09	31-Dec-09
VA0081230	ENTEROCOCCI				3		1-Dec-09	31-Dec-09
VA0081230	CL2, TOTAL CONTACT			0.41			1-Dec-09	31-Dec-09
VA0081230	CL2, TOTAL FINAL				0.012	0.048	1-Dec-09	31-Dec-09
VA0081230	TP mg/l YTD				0.69		1-Dec-09	31-Dec-09
VA0081230	TP mg/l Annual Avg				0.69		1-Jan-09	31-Dec-09
VA0081230	FLOW	12.85	15.26				1-Jan-10	31-Jan-10
VA0081230	PH			6.5		7.0	1-Jan-10	31-Jan-10
VA0081230	BOD5	567	607		12	12	1-Jan-10	31-Jan-10
VA0081230	TSS	518	574		11	11	1-Jan-10	31-Jan-10
VA0081230	COLIFORM, FECAL				4		1-Jan-10	31-Jan-10
VA0081230	TP mg/l				0.68		1-Jan-10	31-Jan-10
VA0081230	ENTEROCOCCI				5		1-Jan-10	31-Jan-10
VA0081230	CL2, TOTAL CONTACT			0.70			1-Jan-10	31-Jan-10
VA0081230	CL2, TOTAL FINAL				<QL	<QL	1-Jan-10	31-Jan-10
VA0081230	TP mg/l YTD				0.68		1-Jan-10	31-Jan-10
VA0081230	FLOW	14.77	27.45				1-Feb-10	28-Feb-10
VA0081230	PH			6.2		6.9	1-Feb-10	28-Feb-10
VA0081230	BOD5	480	645		9	12	1-Feb-10	28-Feb-10
VA0081230	TSS	571	898		10.4	12.9	1-Feb-10	28-Feb-10
VA0081230	COLIFORM, FECAL				2		1-Feb-10	28-Feb-10
VA0081230	TP mg/l				0.39		1-Feb-10	28-Feb-10
VA0081230	ENTEROCOCCI				3		1-Feb-10	28-Feb-10
VA0081230	CL2, TOTAL CONTACT			0.010			1-Feb-10	28-Feb-10
VA0081230	CL2, TOTAL FINAL				0.016	0.053	1-Feb-10	28-Feb-10
VA0081230	TP mg/l YTD				0.53		1-Feb-10	28-Feb-10

VA0081230	FLOW	13.11	21.78				1-Mar-10	31-Mar-10
VA0081230	PH			6.5		6.9	1-Mar-10	31-Mar-10
VA0081230	BOD5	513	472		10	11	1-Mar-10	31-Mar-10
VA0081230	TSS	608	530		12	13	1-Mar-10	31-Mar-10
VA0081230	COLIFORM, FECAL				3		1-Mar-10	31-Mar-10
VA0081230	TP mg/l				0.52		1-Mar-10	31-Mar-10
VA0081230	ENTEROCOCCI				6		1-Mar-10	31-Mar-10
VA0081230	CL2, TOTAL CONTACT			0.51			1-Mar-10	31-Mar-10
VA0081230	CL2, TOTAL FINAL				0.025	0.021	1-Mar-10	31-Mar-10
VA0081230	TP mg/l YTD				0.53		1-Mar-10	31-Mar-10
VA0081230	FLOW	11.20	15.57				1-Apr-10	30-Apr-10
VA0081230	PH			6.6		7.0	1-Apr-10	30-Apr-10
VA0081230	BOD5	480	587		11	13	1-Apr-10	30-Apr-10
VA0081230	TSS	515	662		12	14	1-Apr-10	30-Apr-10
VA0081230	COLIFORM, FECAL				8		1-Apr-10	30-Apr-10
VA0081230	TP mg/l				0.68		1-Apr-10	30-Apr-10
VA0081230	ENTEROCOCCI				2		1-Apr-10	30-Apr-10
VA0081230	CL2, TOTAL CONTACT			0.47			1-Apr-10	30-Apr-10
VA0081230	CL2, TOTAL FINAL				<QL	<QL	1-Apr-10	30-Apr-10
VA0081230	TP mg/l YTD				0.57		1-Apr-10	30-Apr-10
VA0081230	FLOW	10.10	14.73				1-May-10	31-May-10
VA0081230	PH			6.1		7.0	1-May-10	31-May-10
VA0081230	BOD5	512	605		13	15	1-May-10	31-May-10
VA0081230	TSS	494	629		13	15	1-May-10	31-May-10
VA0081230	COLIFORM, FECAL				17		1-May-10	31-May-10
VA0081230	TP mg/l				0.82		1-May-10	31-May-10
VA0081230	ENTEROCOCCI				5		1-May-10	31-May-10
VA0081230	CL2, TOTAL CONTACT			0.59			1-May-10	31-May-10
VA0081230	CL2, TOTAL FINAL				0.0059	0.024	1-May-10	31-May-10
VA0081230	TP mg/l YTD				0.62		1-May-10	31-May-10
VA0081230	FLOW	9.56	10.41				1-Jun-10	30-Jun-10
VA0081230	PH			6.6		7.1	1-Jun-10	30-Jun-10
VA0081230	BOD5	419	500		11	14	1-Jun-10	30-Jun-10
VA0081230	TSS	451	600		12	17	1-Jun-10	30-Jun-10
VA0081230	COLIFORM, FECAL				21		1-Jun-10	30-Jun-10
VA0081230	TP mg/l				0.78		1-Jun-10	30-Jun-10
VA0081230	ENTEROCOCCI				5		1-Jun-10	30-Jun-10
VA0081230	CL2, TOTAL CONTACT			0.10			1-Jun-10	30-Jun-10
VA0081230	CL2, TOTAL FINAL				<QL	<QL	1-Jun-10	30-Jun-10
VA0081230	TP mg/l YTD				0.64		1-Jun-10	30-Jun-10
VA0081230	FLOW	8.96	11.92				1-Jul-10	31-Jul-10
VA0081230	PH			6.7		7.1	1-Jul-10	31-Jul-10
VA0081230	BOD5	370	435		11	12	1-Jul-10	31-Jul-10
VA0081230	TSS	302	399		8.7	12	1-Jul-10	31-Jul-10
VA0081230	COLIFORM, FECAL				2		1-Jul-10	31-Jul-10
VA0081230	TP mg/l				0.68		1-Jul-10	31-Jul-10
VA0081230	ENTEROCOCCI				1		1-Jul-10	31-Jul-10
VA0081230	CL2, TOTAL CONTACT			0.33			1-Jul-10	31-Jul-10
VA0081230	CL2, TOTAL FINAL				<QL	<QL	1-Jul-10	31-Jul-10
VA0081230	TP mg/l YTD				0.65		1-Jul-10	31-Jul-10
VA0081230	FLOW	8.97	9.80				1-Aug-10	31-Aug-10
VA0081230	PH			6.8		7.1	1-Aug-10	31-Aug-10
VA0081230	BOD5	247	332		7	10	1-Aug-10	31-Aug-10
VA0081230	TSS	170	199		5.0	5.7	1-Aug-10	31-Aug-10
VA0081230	COLIFORM, FECAL				2		1-Aug-10	31-Aug-10
VA0081230	TP mg/l				0.70		1-Aug-10	31-Aug-10
VA0081230	ENTEROCOCCI				1		1-Aug-10	31-Aug-10
VA0081230	CL2, TOTAL CONTACT			0.50			1-Aug-10	31-Aug-10
VA0081230	CL2, TOTAL FINAL				<QL	<QL	1-Aug-10	31-Aug-10
VA0081230	TP mg/l YTD				0.66		1-Aug-10	31-Aug-10
VA0081230	FLOW	9.69	29.25				1-Sep-10	30-Sep-10
VA0081230	PH			6.8		7.2	1-Sep-10	30-Sep-10

VA0081230	BOD5	327	386		8	11	1-Sep-10	30-Sep-10
VA0081230	TSS	259	285		6.1	8.3	1-Sep-10	30-Sep-10
VA0081230	COLIFORM, FECAL				7		1-Sep-10	30-Sep-10
VA0081230	TP mg/l				0.67		1-Sep-10	30-Sep-10
VA0081230	ENTEROCOCCI				1		1-Sep-10	30-Sep-10
VA0081230	CL2, TOTAL CONTACT			0.070			1-Sep-10	30-Sep-10
VA0081230	CL2, TOTAL FINAL				0.0073	<QL	1-Sep-10	30-Sep-10
VA0081230	TP mg/l YTD				0.66		1-Sep-10	30-Sep-10
VA0081230	FLOW	13.07	31.78				1-Oct-10	31-Oct-10
VA0081230	PH			6.4		7.1	1-Oct-10	31-Oct-10
VA0081230	BOD5	341	393		7	8	1-Oct-10	31-Oct-10
VA0081230	TSS	549	796		11	17	1-Oct-10	31-Oct-10
VA0081230	COLIFORM, FECAL				5		1-Oct-10	31-Oct-10
VA0081230	TP mg/l				0.71		1-Oct-10	31-Oct-10
VA0081230	ENTEROCOCCI				1		1-Oct-10	31-Oct-10
VA0081230	CL2, TOTAL CONTACT			0.15			1-Oct-10	31-Oct-10
VA0081230	CL2, TOTAL FINAL				<QL	<QL	1-Oct-10	31-Oct-10
VA0081230	TP mg/l YTD				0.66		1-Oct-10	31-Oct-10
VA0081230	FLOW	9.65	10.53				1-Nov-10	30-Nov-10
VA0081230	PH			6.6		7.2	1-Nov-10	30-Nov-10
VA0081230	BOD5	309	373		8	10	1-Nov-10	30-Nov-10
VA0081230	TSS	320	351		8.8	9.4	1-Nov-10	30-Nov-10
VA0081230	COLIFORM, FECAL				6		1-Nov-10	30-Nov-10
VA0081230	TP mg/l				0.83		1-Nov-10	30-Nov-10
VA0081230	ENTEROCOCCI				3		1-Nov-10	30-Nov-10
VA0081230	CL2, TOTAL CONTACT			0.33			1-Nov-10	30-Nov-10
VA0081230	CL2, TOTAL FINAL				<QL	<QL	1-Nov-10	30-Nov-10
VA0081230	TP mg/l YTD				0.68		1-Nov-10	30-Nov-10
VA0081230	FLOW	9.44	10.25				1-Dec-10	31-Dec-10
VA0081230	PH			6.4		7.0	1-Dec-10	31-Dec-10
VA0081230	BOD5	324	345		9	9	1-Dec-10	31-Dec-10
VA0081230	TSS	508	665		14	18	1-Dec-10	31-Dec-10
VA0081230	COLIFORM, FECAL				8		1-Dec-10	31-Dec-10
VA0081230	TP mg/l				0.74		1-Dec-10	31-Dec-10
VA0081230	ENTEROCOCCI				3		1-Dec-10	31-Dec-10
VA0081230	CL2, TOTAL CONTACT			0.30			1-Dec-10	31-Dec-10
VA0081230	CL2, TOTAL FINAL				<QL	<QL	1-Dec-10	31-Dec-10
VA0081230	TP mg/l YTD				0.68		1-Dec-10	31-Dec-10
VA0081230	TP mg/l Annual Avg				0.68		1-Jan-10	31-Dec-10
VA0081230	FLOW	10.41	13.00				1-Jan-11	31-Jan-11
VA0081230	PH			6.5		6.9	1-Jan-11	31-Jan-11
VA0081230	BOD5	382	454		10	12	1-Jan-11	31-Jan-11
VA0081230	TSS	529	640		13	17	1-Jan-11	31-Jan-11
VA0081230	COLIFORM, FECAL				3		1-Jan-11	31-Jan-11
VA0081230	TP mg/l				0.71		1-Jan-11	31-Jan-11
VA0081230	ENTEROCOCCI				3		1-Jan-11	31-Jan-11
VA0081230	CL2, TOTAL CONTACT			0.48			1-Jan-11	31-Jan-11
VA0081230	CL2, TOTAL FINAL				<QL	<QL	1-Jan-11	31-Jan-11
VA0081230	TP mg/l YTD				0.71		1-Jan-11	31-Jan-11
VA0081230	FLOW	10.24	11.00				1-Feb-11	28-Feb-11
VA0081230	PH			6.4		7.0	1-Feb-11	28-Feb-11
VA0081230	BOD5	300	320		8	8	1-Feb-11	28-Feb-11
VA0081230	TSS	363	426		9.4	11	1-Feb-11	28-Feb-11
VA0081230	COLIFORM, FECAL				2		1-Feb-11	28-Feb-11
VA0081230	TP mg/l				0.81		1-Feb-11	28-Feb-11
VA0081230	ENTEROCOCCI				4		1-Feb-11	28-Feb-11
VA0081230	CL2, TOTAL CONTACT			0.53			1-Feb-11	28-Feb-11
VA0081230	CL2, TOTAL FINAL				0.031	0.073	1-Feb-11	28-Feb-11
VA0081230	TP mg/l YTD				0.76		1-Feb-11	28-Feb-11
VA0081230	FLOW	10.63	12.37				1-Mar-11	31-Mar-11
VA0081230	PH			6.4		7.0	1-Mar-11	31-Mar-11
VA0081230	BOD5	513	723		13	18	1-Mar-11	31-Mar-11

VA0081230	TSS	566	765		14	19	1-Mar-11	31-Mar-11
VA0081230	COLIFORM, FECAL				20		1-Mar-11	31-Mar-11
VA0081230	TP mg/l				0.77		1-Mar-11	31-Mar-11
VA0081230	ENTEROCOCCI				11		1-Mar-11	31-Mar-11
VA0081230	CL2, TOTAL CONTACT			0.54			1-Mar-11	31-Mar-11
VA0081230	CL2, TOTAL FINAL				<QL	<QL	1-Mar-11	31-Mar-11
VA0081230	TP mg/l YTD				0.76		1-Mar-11	31-Mar-11
VA0081230	FLOW	9.95	11.10				1-Apr-11	30-Apr-11
VA0081230	PH			6.7		7.0	1-Apr-11	30-Apr-11
VA0081230	BOD5	558	704		15	18	1-Apr-11	30-Apr-11
VA0081230	TSS	624	849		16	21	1-Apr-11	30-Apr-11
VA0081230	COLIFORM, FECAL				15		1-Apr-11	30-Apr-11
VA0081230	TP mg/l				1.2		1-Apr-11	30-Apr-11
VA0081230	ENTEROCOCCI				6		1-Apr-11	30-Apr-11
VA0081230	CL2, TOTAL CONTACT			0.53			1-Apr-11	30-Apr-11
VA0081230	CL2, TOTAL FINAL				<QL	<QL	1-Apr-11	30-Apr-11
VA0081230	TP mg/l YTD				0.86		1-Apr-11	30-Apr-11
VA0081230	FLOW	9.07	9.87				1-May-11	31-May-11
VA0081230	PH			6.9		7.1	1-May-11	31-May-11
VA0081230	BOD5	503	609		15	17	1-May-11	31-May-11
VA0081230	TSS	563	785		16	22	1-May-11	31-May-11
VA0081230	COLIFORM, FECAL				16		1-May-11	31-May-11
VA0081230	TP mg/l				1.6		1-May-11	31-May-11
VA0081230	ENTEROCOCCI				6		1-May-11	31-May-11
VA0081230	CL2, TOTAL CONTACT			0.47			1-May-11	31-May-11
VA0081230	CL2, TOTAL FINAL				0.0052	0.023	1-May-11	31-May-11
VA0081230	TP mg/l YTD				1.0		1-May-11	31-May-11
VA0081230	FLOW	9.03	9.86				1-Jun-11	30-Jun-11
VA0081230	PH			7.0		7.2	1-Jun-11	30-Jun-11
VA0081230	BOD5	384	442		11	13	1-Jun-11	30-Jun-11
VA0081230	TSS	437	612		13	18	1-Jun-11	30-Jun-11
VA0081230	COLIFORM, FECAL				7		1-Jun-11	30-Jun-11
VA0081230	TP mg/l				1.5		1-Jun-11	30-Jun-11
VA0081230	ENTEROCOCCI				3		1-Jun-11	30-Jun-11
VA0081230	CL2, TOTAL CONTACT			0.51			1-Jun-11	30-Jun-11
VA0081230	CL2, TOTAL FINAL				<QL	<QL	1-Jun-11	30-Jun-11
VA0081230	TP mg/l YTD				1.1		1-Jun-11	30-Jun-11
VA0081230	FLOW	9.84	12.08				1-Jul-11	31-Jul-11
VA0081230	PH			6.8		7.2	1-Jul-11	31-Jul-11
VA0081230	BOD5	330	431		9	10	1-Jul-11	31-Jul-11
VA0081230	TSS	344	424		9.2	10	1-Jul-11	31-Jul-11
VA0081230	COLIFORM, FECAL				11		1-Jul-11	31-Jul-11
VA0081230	TP mg/l				1.8		1-Jul-11	31-Jul-11
VA0081230	ENTEROCOCCI				1		1-Jul-11	31-Jul-11
VA0081230	CL2, TOTAL CONTACT			0.30			1-Jul-11	31-Jul-11
VA0081230	CL2, TOTAL FINAL				<QL	<QL	1-Jul-11	31-Jul-11
VA0081230	TP mg/l YTD				1.2		1-Jul-11	31-Jul-11
VA0081230	FLOW	10.65	18.93				1-Aug-11	31-Aug-11
VA0081230	PH			6.8		7.3	1-Aug-11	31-Aug-11
VA0081230	BOD5	388	369		9	10	1-Aug-11	31-Aug-11
VA0081230	TSS	346	294		7.9	8.0	1-Aug-11	31-Aug-11
VA0081230	COLIFORM, FECAL				4		1-Aug-11	31-Aug-11
VA0081230	TP mg/l				1.3		1-Aug-11	31-Aug-11
VA0081230	ENTEROCOCCI				2		1-Aug-11	31-Aug-11
VA0081230	CL2, TOTAL CONTACT			0.53			1-Aug-11	31-Aug-11
VA0081230	CL2, TOTAL FINAL				<QL	<QL	1-Aug-11	31-Aug-11
VA0081230	TP mg/l YTD				1.2		1-Aug-11	31-Aug-11
VA0081230	FLOW	11.50	13.26				1-Sep-11	30-Sep-11
VA0081230	PH			6.9		7.2	1-Sep-11	30-Sep-11
VA0081230	BOD5	416	502		10	12	1-Sep-11	30-Sep-11
VA0081230	TSS	360	500		8.5	12	1-Sep-11	30-Sep-11
VA0081230	COLIFORM, FECAL				8		1-Sep-11	30-Sep-11

VA0081230	TP mg/l				1.5		1-Sep-11	30-Sep-11
VA0081230	ENTEROCOCCI				1		1-Sep-11	30-Sep-11
VA0081230	CL2, TOTAL CONTACT			0.030			1-Sep-11	30-Sep-11
VA0081230	CL2, TOTAL FINAL				<QL	<QL	1-Sep-11	30-Sep-11
VA0081230	TP mg/l YTD				1.3		1-Sep-11	30-Sep-11
VA0081230	FLOW	10.49	12.23				1-Oct-11	31-Oct-11
VA0081230	PH			6.9		7.2	1-Oct-11	31-Oct-11
VA0081230	BOD5	322	455		8	11	1-Oct-11	31-Oct-11
VA0081230	TSS	284	410		7.2	10	1-Oct-11	31-Oct-11
VA0081230	COLIFORM, FECAL				7		1-Oct-11	31-Oct-11
VA0081230	TP mg/l				1.5		1-Oct-11	31-Oct-11
VA0081230	ENTEROCOCCI				2		1-Oct-11	31-Oct-11
VA0081230	CL2, TOTAL CONTACT			0.36			1-Oct-11	31-Oct-11
VA0081230	CL2, TOTAL FINAL				<QL	<QL	1-Oct-11	31-Oct-11
VA0081230	TP mg/l YTD				1.3		1-Oct-11	31-Oct-11
VA0081230	FLOW	9.98	11.12				1-Nov-11	30-Nov-11
VA0081230	PH			6.8		7.2	1-Nov-11	30-Nov-11
VA0081230	BOD5	363	451		9	11	1-Nov-11	30-Nov-11
VA0081230	TSS	400	439		11	12	1-Nov-11	30-Nov-11
VA0081230	COLIFORM, FECAL				13		1-Nov-11	30-Nov-11
VA0081230	TP mg/l				1.6		1-Nov-11	30-Nov-11
VA0081230	ENTEROCOCCI				2		1-Nov-11	30-Nov-11
VA0081230	CL2, TOTAL CONTACT			0.63			1-Nov-11	30-Nov-11
VA0081230	CL2, TOTAL FINAL				<QL	<QL	1-Nov-11	30-Nov-11
VA0081230	TP mg/l YTD				1.3		1-Nov-11	30-Nov-11
VA0081230	FLOW	9.61	10.29				1-Dec-11	31-Dec-11
VA0081230	PH			6.9		7.1	1-Dec-11	31-Dec-11
VA0081230	BOD5	317	365		9	10	1-Dec-11	31-Dec-11
VA0081230	TSS	286	316		7.8	8.8	1-Dec-11	31-Dec-11
VA0081230	COLIFORM, FECAL				4		1-Dec-11	31-Dec-11
VA0081230	TP mg/l				1.4		1-Dec-11	31-Dec-11
VA0081230	ENTEROCOCCI				2		1-Dec-11	31-Dec-11
VA0081230	CL2, TOTAL CONTACT			0.12			1-Dec-11	31-Dec-11
VA0081230	CL2, TOTAL FINAL				<QL	<QL	1-Dec-11	31-Dec-11
VA0081230	TP mg/l YTD				1.3		1-Dec-11	31-Dec-11
VA0081230	TP mg/l Annual Avg				1.3		1-Jan-11	31-Dec-11
VA0081230	FLOW	9.65	10.77				1-Jan-12	31-Jan-12
VA0081230	PH			6.7		7.1	1-Jan-12	31-Jan-12
VA0081230	BOD5	475	569		13	15	1-Jan-12	31-Jan-12
VA0081230	TSS	418	455		11	13	1-Jan-12	31-Jan-12
VA0081230	COLIFORM, FECAL				15		1-Jan-12	31-Jan-12
VA0081230	TP mg/l				0.84		1-Jan-12	31-Jan-12
VA0081230	ENTEROCOCCI				3		1-Jan-12	31-Jan-12
VA0081230	CL2, TOTAL CONTACT			0.52			1-Jan-12	31-Jan-12
VA0081230	CL2, TOTAL FINAL				<QL	<QL	1-Jan-12	31-Jan-12
VA0081230	TP mg/l YTD						1-Jan-12	31-Jan-12
VA0081230	FLOW	10.09	11.26				1-Feb-12	29-Feb-12
VA0081230	PH			6.6		7.1	1-Feb-12	29-Feb-12
VA0081230	BOD5	458	470		12	12	1-Feb-12	29-Feb-12
VA0081230	TSS	458	564		12	14	1-Feb-12	29-Feb-12
VA0081230	COLIFORM, FECAL				2		1-Feb-12	29-Feb-12
VA0081230	TP mg/l				0.92		1-Feb-12	29-Feb-12
VA0081230	ENTEROCOCCI				2		1-Feb-12	29-Feb-12
VA0081230	CL2, TOTAL CONTACT			0.43			1-Feb-12	29-Feb-12
VA0081230	CL2, TOTAL FINAL				<QL	<QL	1-Feb-12	29-Feb-12
VA0081230	TP mg/l YTD						1-Feb-12	29-Feb-12
VA0081230	FLOW	10.48	12.54				1-Mar-12	31-Mar-12
VA0081230	PH			6.3		7.1	1-Mar-12	31-Mar-12
VA0081230	BOD5	441	496		11	12	1-Mar-12	31-Mar-12
VA0081230	TSS	438	535		11	12	1-Mar-12	31-Mar-12
VA0081230	COLIFORM, FECAL				15		1-Mar-12	31-Mar-12
VA0081230	TP mg/l				0.91		1-Mar-12	31-Mar-12

VA0081230	ENTEROCOCCI				8		1-Mar-12	31-Mar-12
VA0081230	CL2, TOTAL CONTACT			0.41			1-Mar-12	31-Mar-12
VA0081230	CL2, TOTAL FINAL				<QL	<QL	1-Mar-12	31-Mar-12
VA0081230	TP mg/l YTD				0.89		1-Mar-12	31-Mar-12

Pulled from discoverer
5/25/12 DCA

SALTWATER AND TRANSITION ZONES
WATER QUALITY CRITERIA / WASTELOAD ALLOCATION ANALYSIS

Facility Name: HRSD Army Base STP
Receiving Stream: Elizabeth River

Permit No.: VA0081230

Version: OWP Guidance Memo 00-2011 (8/24/00)

Stream Information

Mean Hardness (as CaCO3) =	100	mg/l
90th % Temperature (Annual) =	25.97	(° C)
90th % Temperature (Winter) =		(° C)
90th % Maximum pH =	8.06	
10th % Maximum pH =	7.5	
Tier Designation (1 or 2) =	1	
Early Life Stages Present Y/N =	Y	
Tidal Zone =	1	(1 = saltwater, 2 = transition zone)
Mean Salinity =	20.47	(g/kg)

Mixing Information

Design Flow (MGD)	18
Acute WLA multiplier	65
Chronic WLA multiplier	200
Human health WLA multiplier	200

Effluent Information

Mean Hardness (as CaCO3) =	291	mg/L
90 % Temperature (Annual) =		(° C)
90 % Temperature (Winter) =	18	(° C)
90 % Maximum pH =	7.2	SU
10 % Maximum pH =	7	SU
Discharge Flow =	18	MGD

Parameter	Background	Water Quality Criteria			Wasteload Allocations			Antidegradation Baseline			Antidegradation Allocations			**Most Limiting Allocations**		
(ug/l unless noted)	Conc.	Acute	Chronic	HH	Acute	Chronic	HH	Acute	Chronic	HH	Acute	Chronic	HH	**Acute**	**Chronic**	**HH**
Acenapthene	0	--	--	9.9E+02	--	--	2.0E+05	--	--	--	--	--	--	**--**	**--**	**2.0E+05**
Acrolein		--	--	9.3E+00	--	--	1.9E+03	--	--	--	--	--	--	**--**	**--**	**1.9E+03**
Acrylonitrile[C]		--	--	2.5E+00	--	--	5.0E+02	--	--	--	--	--	--	**--**	**--**	**5.0E+02**
Aldrin [C]	0	1.3E+00	--	5.0E-04	8.5E+01	--	1.0E-01	--	--	--	--	--	--	**8.5E+01**	**--**	**1.0E-01**
Ammonia-N (mg/l) - Annual	0	3.70E+00	5.15E-01	--	2.41E+02	1.03E+02	--	--	--	--	--	--	--	**2.41E+02**	**1.03E+02**	**--**
Ammonia-N (mg/l) - Winter	0	2.33E+01	3.35E+00	--	1.52E+03	6.70E+02	--	--	--	--	--	--	--	**1.52E+03**	**6.70E+02**	**--**
Anthracene	0	--	--	4.0E+04	--	--	8.0E+06	--	--	--	--	--	--	**--**	**--**	**8.0E+06**
Antimony	0	--	--	6.4E+02	--	--	1.3E+05	--	--	--	--	--	--	**--**	**--**	**1.3E+05**
Arsenic	0	6.9E+01	3.6E+01	--	4.5E+03	7.2E+03	--	--	--	--	--	--	--	**4.5E+03**	**7.2E+03**	**--**
Benzene [C]	0	--	--	5.1E+02	--	--	1.0E+05	--	--	--	--	--	--	**--**	**--**	**1.0E+05**
Benzidine[C]		--	--	2.0E-03	--	--	4.0E-01	--	--	--	--	--	--	**--**	**--**	**4.0E-01**
Benzo (a) anthracene [C]	0	--	--	1.8E-01	--	--	3.6E+01	--	--	--	--	--	--	**--**	**--**	**3.6E+01**
Benzo (b) fluoranthene [C]	0	--	--	1.8E-01	--	--	3.6E+01	--	--	--	--	--	--	**--**	**--**	**3.6E+01**
Benzo (k) fluoranthene [C]	0	--	--	1.8E-01	--	--	3.6E+01	--	--	--	--	--	--	**--**	**--**	**3.6E+01**
Benzo (a) pyrene [C]	0	--	--	1.8E-01	--	--	3.6E+01	--	--	--	--	--	--	**--**	**--**	**3.6E+01**
Bis2-Chloroethyl Ether[C]	0	--	--	5.3E+00	--	--	1.1E+03	--	--	--	--	--	--	**--**	**--**	**1.1E+03**
Bis2-Chloroisopropyl Ether	0	--	--	6.5E+04	--	--	1.3E+07	--	--	--	--	--	--	**--**	**--**	**1.3E+07**
Bis2-Ethylhexyl Phthalate[C]	0	--	--	2.2E+01	--	--	4.4E+03	--	--	--	--	--	--	**--**	**--**	**4.4E+03**
Bromoform [C]	0	--	--	1.4E+03	--	--	2.8E+05	--	--	--	--	--	--	**--**	**--**	**2.8E+05**
Butylbenzylphthalate	0	--	--	1.9E+03	--	--	3.8E+05	--	--	--	--	--	--	**--**	**--**	**3.8E+05**
Cadmium	0	4.0E+01	8.8E+00	--	2.6E+03	1.8E+03	--	--	--	--	--	--	--	**2.6E+03**	**1.8E+03**	**--**
Carbon Tetrachloride [C]	0	--	--	1.6E+01	--	--	3.2E+03	--	--	--	--	--	--	**--**	**--**	**3.2E+03**
Chlordane [C]	0	9.0E-02	4.0E-03	8.1E-03	5.9E+00	8.0E-01	1.6E+00	--	--	--	--	--	--	**5.9E+00**	**8.0E-01**	**1.6E+00**

Parameter	Background	Water Quality Criteria			Wasteload Allocations			Antidegradation Baseline			Antidegradation Allocations			**Most Limiting Allocations**		
(ug/l unless noted)	Conc.	Acute	Chronic	HH	Acute	Chronic	HH	Acute	Chronic	HH	Acute	Chronic	HH	**Acute**	**Chronic**	**HH**
TRC	0			--			--	--	--	--	--	--	--	--	--	--
Chlorine Prod. Oxidant	0	1.3E+01	7.5E+00	--	8.5E+02	1.5E+03	--	--	--	--	--	--	--	**8.5E+02**	**1.5E+03**	--
Chlorobenzene		--	--	1.6E+03	--	--	3.2E+05	--	--	--	--	--	--	--	--	**3.2E+05**
Chlorodibromomethane[C]	0	--	--	1.3E+02	--	--	2.6E+04	--	--	--	--	--	--	--	--	**2.6E+04**
Chloroform	0	--	--	1.1E+04	--	--	2.2E+06	--	--	--	--	--	--	--	--	**2.2E+06**
2-Chloronaphthalene	0	--	--	1.6E+03	--	--	3.2E+05	--	--	--	--	--	--	--	--	**3.2E+05**
2-Chlorophenol	0	--	--	1.5E+02	--	--	3.0E+04	--	--	--	--	--	--	--	--	**3.0E+04**
Chlorpyrifos	0	1.1E-02	5.6E-03	--	7.2E-01	1.1E+00	--	--	--	--	--	--	--	**7.2E-01**	**1.1E+00**	--
Chromium III	0			--			--	--	--	--	--	--	--	--	--	--
Chromium VI	0	1.1E+03	5.0E+01	--	7.2E+04	1.0E+04	--	--	--	--	--	--	--	**7.2E+04**	**1.0E+04**	--
Chrysene [C]	0	--	--	1.8E-02	--	--	3.6E+00	--	--	--	--	--	--	--	--	**3.6E+00**
Copper	0	9.3E+00	6.0E+00	--	6.0E+02	1.2E+03	--	--	--	--	--	--	--	**6.0E+02**	**1.2E+03**	--
Cyanide, Free	0	1.0E+00	1.0E+00	1.6E+04	6.5E+01	2.0E+02	3.2E+06	--	--	--	--	--	--	**6.5E+01**	**2.0E+02**	**3.2E+06**
DDD [C]	0	--	--	3.1E-03	--	--	6.2E-01	--	--	--	--	--	--	--	--	**6.2E-01**
DDE [C]	0	--	--	2.2E-03	--	--	4.4E-01	--	--	--	--	--	--	--	--	**4.4E-01**
DDT [C]	0	1.3E-01	1.0E-03	2.2E-03	8.5E+00	2.0E-01	4.4E-01	--	--	--	--	--	--	**8.5E+00**	**2.0E-01**	**4.4E-01**
Demeton	0	--	1.0E-01	--	--	2.0E+01	--	--	--	--	--	--	--	--	**2.0E+01**	--
Diazinon	0	8.2E-01	8.2E-01	--	5.3E+01	1.6E+02	--	--	--	--	--	--	--	**5.3E+01**	**1.6E+02**	--
Dibenz(a,h)anthracene [C]	0	--	--	1.8E-01	--	--	3.6E+01	--	--	--	--	--	--	--	--	**3.6E+01**
1,2-Dichlorobenzene	0	--	--	1.3E+03	--	--	2.6E+05	--	--	--	--	--	--	--	--	**2.6E+05**
1,3-Dichlorobenzene	0	--	--	9.6E+02	--	--	1.9E+05	--	--	--	--	--	--	--	--	**1.9E+05**
1,4-Dichlorobenzene	0	--	--	1.9E+02	--	--	3.8E+04	--	--	--	--	--	--	--	--	**3.8E+04**
3,3-Dichlorobenzidine[C]	0	--	--	2.8E-01	--	--	5.6E+01	--	--	--	--	--	--	--	--	**5.6E+01**
Dichlorobromomethane [C]	0	--	--	1.7E+02	--	--	3.4E+04	--	--	--	--	--	--	--	--	**3.4E+04**
1,2-Dichloroethane [C]	0	--	--	3.7E+02	--	--	7.4E+04	--	--	--	--	--	--	--	--	**7.4E+04**
1,1-Dichloroethylene	0	--	--	7.1E+03	--	--	1.4E+06	--	--	--	--	--	--	--	--	**1.4E+06**
1,2-trans-dichloroethylene	0	--	--	1.0E+04	--	--	2.0E+06	--	--	--	--	--	--	--	--	**2.0E+06**
2,4-Dichlorophenol	0	--	--	2.9E+02	--	--	5.8E+04	--	--	--	--	--	--	--	--	**5.8E+04**
1,2-Dichloropropane[C]	0	--	--	1.5E+02	--	--	3.0E+04	--	--	--	--	--	--	--	--	**3.0E+04**
1,3-Dichloropropene[C]	0	--	--	2.1E+02	--	--	4.2E+04	--	--	--	--	--	--	--	--	**4.2E+04**
Dieldrin [C]	0	7.1E-01	1.9E-03	5.4E-04	4.6E+01	3.8E-01	1.1E-01	--	--	--	--	--	--	**4.6E+01**	**3.8E-01**	**1.1E-01**
Diethyl Phthalate	0	--	--	4.4E+04	--	--	8.8E+06	--	--	--	--	--	--	--	--	**8.8E+06**
2,4-Dimethylphenol	0	--	--	8.5E+02	--	--	1.7E+05	--	--	--	--	--	--	--	--	**1.7E+05**
Dimethyl Phthalate	0	--	--	1.1E+06	--	--	2.2E+08	--	--	--	--	--	--	--	--	**2.2E+08**
Di-n-Butyl Phthalate	0	--	--	4.5E+03	--	--	9.0E+05	--	--	--	--	--	--	--	--	**9.0E+05**
2,4 Dinitrophenol	0	--	--	5.3E+03	--	--	1.1E+06	--	--	--	--	--	--	--	--	**1.1E+06**
2-Methyl-4,6-Dinitrophenol	0	--	--	2.8E+02	--	--	5.6E+04	--	--	--	--	--	--	--	--	**5.6E+04**
2,4-Dinitrotoluene [C]	0	--	--	3.4E+01	--	--	6.8E+03	--	--	--	--	--	--	--	--	**6.8E+03**
Dioxin 2,3,7,8-tetrachlorodibenzo-p-dioxin	0	--	--	5.1E-08	--	--	1.0E-05	--	--	--	--	--	--	--	--	**1.0E-05**
1,2-Diphenylhydrazine[C]	0	--	--	2.0E+00	--	--	4.0E+02	--	--	--	--	--	--	--	--	**4.0E+02**
Alpha-Endosulfan	0	3.4E-02	8.7E-03	8.9E+01	2.2E+00	1.7E+00	1.8E+04	--	--	--	--	--	--	**2.2E+00**	**1.7E+00**	**1.8E+04**

Parameter	Background	Water Quality Criteria			Wasteload Allocations			Antidegradation Baseline			Antidegradation Allocations			**Most Limiting Allocations**		
(ug/l unless noted)	Conc.	Acute	Chronic	HH	Acute	Chronic	HH	Acute	Chronic	HH	Acute	Chronic	HH	**Acute**	**Chronic**	**HH**
Beta-Endosulfan	0	3.4E-02	8.7E-03	8.9E+01	2.2E+00	1.7E+00	1.8E+04	--	--	--	--	--	--	**2.2E+00**	**1.7E+00**	**1.8E+04**
Alpha + Beta Endosulfan	0	3.4E-02	8.7E-03	--	2.2E+00	1.7E+00	--	--	--	--	--	--	--	**2.2E+00**	**1.7E+00**	**--**
Endosulfan Sulfate	0	--	--	8.9E+01	--	--	1.8E+04	--	--	--	--	--	--	**--**	**--**	**1.8E+04**
Endrin	0	3.7E-02	2.3E-03	6.0E-02	2.4E+00	4.6E-01	1.2E+01	--	--	--	--	--	--	**2.4E+00**	**4.6E-01**	**1.2E+01**
Endrin Aldehyde	0	--	--	3.0E-01	--	--	6.0E+01	--	--	--	--	--	--	**--**	**--**	**6.0E+01**
Ethylbenzene	0	--	--	2.1E+03	--	--	4.2E+05	--	--	--	--	--	--	**--**	**--**	**4.2E+05**
Fluoranthene	0	--	--	1.4E+02	--	--	2.8E+04	--	--	--	--	--	--	**--**	**--**	**2.8E+04**
Fluorene	0	--	--	5.3E+03	--	--	1.1E+06	--	--	--	--	--	--	**--**	**--**	**1.1E+06**
Guthion	0	--	1.0E-02	--	--	2.0E+00	--	--	--	--	--	--	--	**--**	**2.0E+00**	**--**
Heptachlor [C]	0	5.3E-02	3.6E-03	7.9E-04	3.4E+00	7.2E-01	1.6E-01	--	--	--	--	--	--	**3.4E+00**	**7.2E-01**	**1.6E-01**
Heptachlor Epoxide[C]	0	5.3E-02	3.6E-03	3.9E-04	3.4E+00	7.2E-01	7.8E-02	--	--	--	--	--	--	**3.4E+00**	**7.2E-01**	**7.8E-02**
Hexachlorobenzene[C]	0	--	--	2.9E-03	--	--	5.8E-01	--	--	--	--	--	--	**--**	**--**	**5.8E-01**
Hexachlorobutadiene[C]	0	--	--	1.8E+02	--	--	3.6E+04	--	--	--	--	--	--	**--**	**--**	**3.6E+04**
Hexachlorocyclohexane Alpha-BHC[C]	0	--	--	4.9E-02	--	--	9.8E+00	--	--	--	--	--	--	**--**	**--**	**9.8E+00**
Hexachlorocyclohexane Beta-BHC[C]	0	--	--	1.7E-01	--	--	3.4E+01	--	--	--	--	--	--	**--**	**--**	**3.4E+01**
Hexachlorocyclohexane Gamma-BHC[C] (Lindane)	0	1.6E-01	--	1.8E+00	1.0E+01	--	3.6E+02	--	--	--	--	--	--	**1.0E+01**	**--**	**3.6E+02**
Hexachlorocyclopentadiene	0	--	--	1.1E+03	--	--	2.2E+05	--	--	--	--	--	--	**--**	**--**	**2.2E+05**
Hexachloroethane[C]	0	--	--	3.3E+01	--	--	6.6E+03	--	--	--	--	--	--	**--**	**--**	**6.6E+03**
Hydrogen Sulfide	0	--	2.0E+00	--	--	4.0E+02	--	--	--	--	--	--	--	**--**	**4.0E+02**	**--**
Indeno (1,2,3-cd) pyrene C	0	--	--	1.8E-01	--	--	3.6E+01	--	--	--	--	--	--	**--**	**--**	**3.6E+01**
Isophorone[C]	0	--	--	9.6E+03	--	--	1.9E+06	--	--	--	--	--	--	**--**	**--**	**1.9E+06**
Kepone	0	--	0.0E+00	--	--	0.0E+00	--	--	--	--	--	--	--	**--**	**0.0E+00**	**--**
Lead	0	2.4E+02	9.3E+00	--	1.6E+04	1.9E+03	--	--	--	--	--	--	--	**1.6E+04**	**1.9E+03**	**--**
Malathion	0	--	1.0E-01	--	--	2.0E+01	--	--	--	--	--	--	--	**--**	**2.0E+01**	**--**
Mercury	0	1.8E+00	9.4E-01	--	1.2E+02	1.9E+02	--	--	--	--	--	--	--	**1.2E+02**	**1.9E+02**	**--**
Methyl Bromide	0	--	--	1.5E+03	--	--	3.0E+05	--	--	--	--	--	--	**--**	**--**	**3.0E+05**
Methylene Chloride [C]	0	--	--	5.9E+03	--	--	1.2E+06	--	--	--	--	--	--	**--**	**--**	**1.2E+06**
Methoxychlor	0	--	3.0E-02	--	--	6.0E+00	--	--	--	--	--	--	--	**--**	**6.0E+00**	**--**
Mirex	0	--	0.0E+00	--	--	0.0E+00	--	--	--	--	--	--	--	**--**	**0.0E+00**	**--**
Nickel	0	7.4E+01	8.2E+00	4.6E+03	4.8E+03	1.6E+03	9.2E+05	--	--	--	--	--	--	**4.8E+03**	**1.6E+03**	**9.2E+05**
Nitrobenzene	0	--	--	6.9E+02	--	--	1.4E+05	--	--	--	--	--	--	**--**	**--**	**1.4E+05**
N-Nitrosodimethylamine[C]	0	--	--	3.0E+01	--	--	6.0E+03	--	--	--	--	--	--	**--**	**--**	**6.0E+03**
N-Nitrosodiphenylamine[C]	0	--	--	6.0E+01	--	--	1.2E+04	--	--	--	--	--	--	**--**	**--**	**1.2E+04**
N-Nitrosodi-n-propylamine[C]	0	--	--	5.1E+00	--	--	1.0E+03	--	--	--	--	--	--	**--**	**--**	**1.0E+03**
Nonylphenol	0	7.0E+00	1.7E+00	--	4.6E+02	3.4E+02	--	--	--	--	--	--	--	**4.6E+02**	**3.4E+02**	**--**
Parathion	0	--	--	--	--	--	--	--	--	--	--	--	--	**--**	**--**	**--**
PCB Total[C]	0	--	3.0E-02	6.4E-04	--	6.0E+00	1.3E-01	--	--	--	--	--	--	**--**	**6.0E+00**	**1.3E-01**
Pentachlorophenol [C]	0	1.3E+01	7.9E+00	3.0E+01	8.5E+02	1.6E+03	6.0E+03	--	--	--	--	--	--	**8.5E+02**	**1.6E+03**	**6.0E+03**

Parameter	Background	Water Quality Criteria			Wasteload Allocations			Antidegradation Baseline			Antidegradation Allocations			**Most Limiting Allocations**		
(ug/l unless noted)	Conc.	Acute	Chronic	HH	Acute	Chronic	HH	Acute	Chronic	HH	Acute	Chronic	HH	**Acute**	**Chronic**	**HH**
Phenol	0	--	--	8.6E+05	--	--	1.7E+08	--	--	--	--	--	--	--	--	**1.7E+08**
Phosphorus (Elemental)	0	--	1.0E-01	--	--	2.0E+01	--	--	--	--	--	--	--	--	**2.0E+01**	--
Pyrene	0	--	--	4.0E+03	--	--	8.0E+05	--	--	--	--	--	--	--	--	**8.0E+05**
Selenium	0	2.9E+02	7.1E+01	4.2E+03	1.9E+04	1.4E+04	8.4E+05	--	--	--	--	--	--	**1.9E+04**	**1.4E+04**	**8.4E+05**
Silver	0	1.9E+00	--	--	1.2E+02	--	--	--	--	--	--	--	--	**1.2E+02**	--	--
1,1,2,2-Tetrachloroethane[C]	0	--	--	4.0E+01	--	--	8.0E+03	--	--	--	--	--	--	--	--	**8.0E+03**
Tetrachloroethylene[C]	0	--	--	3.3E+01	--	--	6.6E+03	--	--	--	--	--	--	--	--	**6.6E+03**
Thallium	0	--	--	4.7E-01	--	--	9.4E+01	--	--	--	--	--	--	--	--	**9.4E+01**
Toluene	0	--	--	6.0E+03	--	--	1.2E+06	--	--	--	--	--	--	--	--	**1.2E+06**
Toxaphene [C]	0	2.1E-01	2.0E-04	2.8E-03	1.4E+01	4.0E-02	5.6E-01	--	--	--	--	--	--	**1.4E+01**	**4.0E-02**	**5.6E-01**
Tributyltin	0	4.2E-01	7.4E-03	--	2.7E+01	1.5E+00	--	--	--	--	--	--	--	**2.7E+01**	**1.5E+00**	--
1,2,4-Trichlorobenzene	0	--	--	7.0E+01	--	--	1.4E+04	--	--	--	--	--	--	--	--	**1.4E+04**
1,1,2-Trichloroethane[C]		--	--	1.6E+02	--	--	3.2E+04	--	--	--	--	--	--	--	--	**3.2E+04**
Trichloroethylene [C]	0	--	--	3.0E+02	--	--	6.0E+04	--	--	--	--	--	--	--	--	**6.0E+04**
2,4,6-Trichlorophenol [C]	0	--	--	2.4E+01	--	--	4.8E+03	--	--	--	--	--	--	--	--	**4.8E+03**
Vinyl Chloride[C]	0	--	--	2.4E+01	--	--	4.8E+03	--	--	--	--	--	--	--	--	**4.8E+03**
Zinc	0	9.0E+01	8.1E+01	2.6E+04	5.9E+03	1.6E+04	5.2E+06	--	--	--	--	--	--	**5.9E+03**	**1.6E+04**	**5.2E+06**

Notes:

1. All concentrations expressed as micrograms/liter (ug/l), unless noted otherwise
2. Discharge flow is highest monthly average or Form 2C maximum for Industries and design flow for Municipals
3. Metals measured as Dissolved, unless specified otherwise
4. "C" indicates a carcinogenic parameter
5. For transition zone waters, spreadsheet prints the lesser of the freshwater and saltwater water quality criteria.
6. Regular WLA = (WQC x WLA multiplier) - (WLA multiplier - 1)(background conc.)
7. Antideg. Baseline = (0.25(WQC - background conc.) + background conc.) for acute and chronic
   = (0.1(WQC - background conc.) + background conc.) for human health
8. Antideg. WLA = (Antideg. Baseline)(WLA multiplier) - (WLA multiplier - 1)(background conc.)

Metal	Site Specific Target Value (SSTV)
Antimony	1.3E+05
Arsenic III	1.8E+03
Cadmium	1.0E+03
Chromium III	#VALUE!
Chromium VI	6.0E+03
Copper	2.4E+02
Lead	1.1E+03
Mercury	4.7E+01
Nickel	9.8E+02
Selenium	7.5E+03
Silver	4.9E+01
Zinc	2.3E+03

Note: do not use QL's lower than the minimum QL's provided in agency guidance

HD
RECEIVED – DEQ
MAY 21 2012
Tidewater Regional Office

VIRGINIA DEQ NO EXPOSURE CERTIFICATION FOR EXCLUSION FROM VPDES STORM WATER PERMITTING

Submission of this **No Exposure Certification** constitutes notice that the entity identified below does not require permit authorization for its storm water discharges associated with industrial activity under the VPDES Permit Program due to the existence of a condition of **No Exposure**.

A condition of **No Exposure** exists at an industrial facility when all industrial materials and activities are protected by a storm resistant shelter to prevent exposure to rain, snow, snowmelt, and/or runoff. Industrial materials or activities include, but are not limited to, material handling equipment or activities, industrial machinery, raw materials, intermediate products, by-products, final products, or waste products. Material handling activities include the storage, loading and unloading, transportation, or conveyance of any raw material, intermediate product, final product or waste product. A storm resistant shelter is not required for the following industrial materials and activities:

- drums, barrels, tanks, and similar containers that are tightly sealed, provided those containers are not deteriorated and do not leak. "Sealed" means banded or otherwise secured and without operational taps or valves;
- adequately maintained vehicles used in material handling; and
- final products, other than products that would be mobilized in storm water discharges (e.g., rock salt).

A No Exposure Certification must be provided for each facility qualifying for the No Exposure exclusion. In addition, the exclusion from VPDES permitting is available on a facility-wide basis only, not for individual outfalls. If any industrial activities or materials are or will be exposed to precipitation, the facility is not eligible for the No Exposure exclusion.

By signing and submitting this No Exposure Certification form, the entity below is certifying that a condition of No Exposure exists at its facility or site, and is obligated to comply with the terms and conditions at 9 VAC 25-31-120 E (the VPDES Permit Regulation).

Please Type or Print All Information. ALL INFORMATION ON THIS FORM MUST BE PROVIDED.

1. **Facility Operator Information**

   Name: Hampton Roads Sanitation District

   Mailing Address: 1436 Air Rail Avenue

   City: Virginia Beach State: VA Zip: 23455 Phone: 757-460-2261

2. **Facility/Site Location Information**

   Facility Name: Army Base STP

   Address: 401 Lagoon Road

   City: Norfolk State: VA Zip: 23505

   County Name: _____

   Latitude: 36 55' 17" Longitude: 76 19' 36"

3. **Was the facility or site previously covered under a VPDES storm water permit?** Yes ☑ No ☐

   If "Yes", enter the VPDES permit number: VA0081230

4. **SIC/Activity Codes:** Primary: 4952 Secondary (if applicable): _____

5. **Total size of facility/site associated with industrial activity:** 6.72 acres

6. **Have you paved or roofed over a formerly exposed pervious area in order to qualify for the No Exposure exclusion?** Yes ☐ No ☑

   If "Yes", please indicate approximately how much area was paved or roofed. Completing this question does not disqualify you for the No Exposure exclusion. However, DEQ may use this information in considering whether storm water discharges from your site are likely to have an adverse impact on water quality, in which case you could be required to obtain permit coverage.

   Less than one acre ☐ One to five acres ☐ More than five acres ☐

7. Exposure Checklist

Are any of the following materials or activities exposed to precipitation, now or in the foreseeable future? (Please check either "Yes" or "No" in the appropriate box.) **If you answer "Yes" to any of these questions (1) through (11), you are not eligible for the No Exposure exclusion.**

		Yes	No
(1)	Using, storing or cleaning industrial machinery or equipment, and areas where residuals from using, storing or cleaning industrial machinery or equipment remain and are exposed to storm water	☐	☑
(2)	Materials or residuals on the ground or in storm water inlets from spill/leaks	☐	☑
(3)	Materials or products from past industrial activity	☐	☑
(4)	Material handling equipment (except adequately maintained vehicles)	☐	☑
(5)	Materials or products during loading/unloading or transporting activities	☐	☑
(6)	Materials or products stored outdoors (except final products intended for outside use [e.g., new cars] where exposure to storm water does not result in the discharge of pollutants)	☐	☑
(7)	Materials contained in open, deteriorated or leaking storage drums, barrels, tanks, and similar containers	☐	☑
(8)	Materials or products handled/stored on roads or railways owned or maintained by the discharger	☐	☑
(9)	Waste material (except waste in covered, non-leaking containers [e.g., dumpsters])	☐	☑
(10)	Application or disposal of process wastewater (unless otherwise permitted)	☐	☑
(11)	Particulate matter or visible deposits of residuals from roof stacks and/or vents not otherwise regulated (i.e., under an air quality control permit) and evident in the storm water outflow	☐	☑

8. Certification Statement

I certify under penalty of law that I have read and understand the eligibility requirements for claiming a condition of no exposure and obtaining an exclusion from VPDES storm water permitting; and that there are no discharges of storm water contaminated by exposure to industrial activities or materials from the industrial facility identified in this document (except as allowed under 9 VAC 25-31-120 E 2).

I understand that I am obligated to submit a No Exposure Certification form once every five years to the Department of Environmental Quality and, if requested, to the operator of the local MS4 into which this facility discharges (where applicable). I understand that I must allow the Department, or MS4 operator where the discharge is into the local MS4, to perform inspections to confirm the condition of no exposure and to make such inspection reports publicly available upon request. I understand that I must obtain coverage under a VPDES permit prior to any point source discharge of storm water associated with industrial activity from the facility.

I certify under penalty of law that this document and all attachments were prepared under my direction or supervision in accordance with a system designed to assure that qualified personnel properly gathered and evaluated the information submitted. Based upon my inquiry of the person or persons who manage the system, or those persons directly involved in gathering the information, the information submitted is to the best of my knowledge and belief true, accurate and complete. I am aware that there are significant penalties for submitting false information, including the possibility of fine and imprisonment for knowing violations.

Print Name: Edward G. Henifin, P.E.

Print Title: General Manager

Signature: [signature]

Date: 5/21/12

For Department of Environmental Quality Use Only

Accepted/Not Accepted by: [signature] Date: 5/30/12

ATTACHMENT 7

SPECIAL CONDITIONS RATIONALE

VPDES PERMIT PROGRAM
LIST OF SPECIAL CONDITIONS RATIONALE

Name of Condition:

B. Additional Total Residual Chlorine (TRC) Limitations and Monitoring Requirements

Rationale: Required by Water Quality Standards, 9VAC 25-260-170, Fecal coliform bacteria; other waters. Also, 40 CFR 122.41(e) requires the permittee, at all times, to properly operate and maintain all facilities and systems of treatment in order to comply with the permit. This ensures proper operation of chlorination equipment to maintain adequate disinfection.

C. OTHER REQUIREMENTS OR SPECIAL CONDITIONS

1.a. Sludge Reopener

Rationale: Required by the VPDES Permit Regulation, 9 VAC 25-31-220 C., and 40 CFR 122.44 (c)(4), which note that all permits for domestic sewage treatment plants (including sludge-only facilities) include any applicable standard for sewage sludge use or disposal promulgated under section 405(d) of the Clean Water Act.

1.b. Water Quality Standards Reopener

Rationale: The VPDES Permit Regulation, 9 VAC 25-31-220 D requires effluent limitations to be established which will contribute to the attainment or maintenance of water quality criteria.

1.c. Nutrient Reopener

Rationale: 9 VAC 25-40-70 A authorizes DEQ to include technology-based annual concentration limits in the permits of facilities that have installed nutrient control equipment, whether by new construction, expansion or upgrade. 9 VAC 25-31-390 A authorizes DEQ to modify VPDES permits to promulgate amended water quality standards.

1.d. Nutrient Removal Facilities Reopener

Rationale: 9 VAC 25-40-70 A authorizes DEQ to include technology-based annual concentration limits in the permits of facilities that have installed nutrient control equipment, whether by new construction, expansion or upgrade.

1.e. Total Maximum Daily Load (TMDL) Reopener

Rationale: For specified waters, section 303(d) of the Clean Water Act requires the development of total maximum daily loads necessary to achieve the applicable water quality standards. The TMDL must take into account seasonal variations and a margin of safety. In addition, section 62.1-44.19:7 of the State Water Control Law requires the development and implementation of plans to address impaired waters, including TMDLs. This condition allows for the permit to be either modified or, alternatively, revoked and reissued to incorporate the requirements of a TMDL once it is developed. In addition, the reopener recognizes that, in according to section 402(o)(1) of the Clean Water Act, limits and/or conditions may be either more or less stringent than those contained in this permit. Specifically, they can be relaxed if they are the result of a TMDL, basin plan or other wasteload allocation prepared under section 303 of the Act.

2. Licensed Operator Requirement

Rationale: The Permit Regulation, 9 VAC 25-31-200 D and Code of Virginia 54.1-2300 et. seq., Rules and Regulations for Waterworks and Wastewater Works Operators (18 VAC 160-20-10 et seq.) requires licensure of operators.

3. Reliability Class

Rationale: Required by Sewage Collection and Treatment Regulations, 12 VAC 5-581-20 and 120 for all municipal facilities.

4. CTC, CTO and O & M Manual Requirements

Rationale: Required by the State Water Control Law, Section 62.1-44.19; the Sewage Collection and Treatment Regulations (12 VAC 5-581 et seq); Section 401 of the Clean Water Act; 40 CFR 122.41(e); and the VPDES Permit Regulation (9 VAC-25-31-190E).
9 VAC 25-40-70 A authorizes DEQ to include technology-based annual concentration limits in the permits of facilities that have installed nutrient control equipment, whether by new construction, expansion or upgrade.

5. 95% Design Capacity Notification

Rationale: Required by the VPDES Permit Regulation, 9 VAC 25-31-200 B.2. for all POTW and PVOTW permits. Best professional judgment is used to apply this condition to other (private) municipal treatment facilities.

6. Quantification Levels Under Part I.A.

Rationale: States are authorized to establish monitoring methods and procedures to compile and analyze data on water quality, as per 40 CFR part 130, Water Quality Planning and Management, subpart 130.4.

7. Compliance Reporting Under Part I.A.

Rationale: Defines reporting requirements for toxic parameters with quantification levels and other limited parameters to ensure consistent, accurate reporting on submitted reports.

8. Effluent Monitoring Frequencies

Rationale: The incentive for reduced monitoring is an effort to reduce the cost of environmental compliance and to provide incentives to facilities which demonstrate outstanding performance and consistent compliance with their permits. Facilities which cannot comply with specific effluent parameters or have other related violations will not be eligible for this benefit. This is in conformance with Guidance Memorandum No. 98-2005 - Reduced Monitoring and EPA's proposed "Interim Guidance For Performance-Based Reduction of NPDES Permit Monitoring Frequencies" (EPA 833-B-96-001) published in April 1996.

9. Indirect Dischargers

Rationale: Required by VPDES Permit Regulation, 9 VAC 25-31-200 B.1. for POTWs and PVOTWs that receive waste from someone other than the owner of the treatment works.

10. Sludge Management Plan

Rationale: The VPDES Permit Regulation, 9 VAC 25-31-420, and 40 CFR 503.1 specify the purpose and applicability for sludge management plans. The VPDES Permit Regulation, 9 VAC 25-31-100 J.4., also sets forth certain detailed information which must be included in a sludge management plan. The VPDES sewage sludge permit application form and its attachments constitute the sludge management plan and will be considered for approval with the VPDES permit. In addition, the Biosolids Use Regulation, 12 VAC 5-585-330 and 340, specifies the general purpose and control requirements for an O&M manual in order to facilitate proper O&M of the facilities to meet the requirements of the regulation.

11. Total Phosphorus/Total Nitrogen-Nutrient reporting calculations

Rationale: §62.1-44.19:13 of the Code of Virginia defines how annual nutrient loads are to be calculated; this is carried forward in 9 VAC 25-820-70. As annual concentrations (as opposed to loads) are limited in the individual permit, this special condition is intended to reconcile the reporting calculations between the permit programs, as the permittee is collecting a single set of samples for the purpose of ascertaining compliance with two permits.

12. Suspension of concentration limits for E3/E4 facilities

Rationale: 9 VAC 25-40-70 B authorizes DEQ to approve an alternate compliance method to the technology-based effluent concentration limitations as required by subsection A of this section. Such alternate compliance method shall be incorporated into the permit of an Exemplary Environmental Enterprise (E3) facility or an Extraordinary Environmental Enterprise (E4) facility to allow the suspension of applicable technology-based effluent concentration limitations during the period the E3 or E4 facility has a fully implemented environmental management system that includes operation of installed nutrient removal technologies at the treatment efficiency levels for which they were designed.

D. PRETREATMENT

Rationale: The permit regulation, 9 VAC 25-31-10 et seq., Part VII, establishes the legal requirements for State, local government and industry to implement National Pretreatment Standards. The Pretreatment Standards are implemented to prevent POTW plant pass through, interference, violation of water quality standards or contamination of sewage sludge. The regulation requires POTWs with a total design flow greater than 5 MGD with significant or categorical industrial input to establish a Pretreatment Program. The regulation also may apply to POTWs with design flows less than 5 MGD if circumstances warrant control of industrial discharges.

E. TOXICS MANAGENENT PROGRAM (TMP)

Rationale: To determine the need for pollutant specific and/or whole effluent toxicity limits as may be required by the VPDES Permit Regulation, 9 VAC 25-31-220 D. and 40 CFR 122.44 (d). See Attachment 8 of this fact sheet for additional justification.

ATTACHMENT 8

TOXICS MONITORING/TOXICS REDUCTION/ WET LIMIT RATIONALE

MEMORANDUM

VIRGINIA DEPARTMENT OF ENVIRONMENTAL QUALITY

TIDEWATER REGIONAL OFFICE

5636 Southern Boulevard Virginia Beach, VA 23462

SUBJECT: Toxics Management Program (TMP) testing for HRSD-Army Base Plant (VA0081230)

TO: File

FROM: Deanna Austin DOA

DATE: 5/30/12

COPIES:

HRSD-VIP plant is a major municipal discharger (design flow 18 MGD) of treated domestic sewage. Discharge from outfall 001 to the Elizabeth River will continue to be monitored for toxicity during this permit term.

There has been no change in the dilution from the previous permit; therefore the nearfield (acute) dilution factor (65) remains the same. The following calculation shows how the TU_a was derived.

Acute dilution = $100/IWC_a$

65= 100/IWCa

100/65 = 1.54% IWC_a

$LC_{50=}$ IWC/Acute Water Quality Instream criterion

$LC_{50=}$ 1.54/0.3 = 5.13%

A LC_{50} of 6% will be used in the permit. Precedence has been previously set to round up to the whole number when using a whole number percentage for the LC_{50}

$TU_a = 1/LC_{50} \times 100$

1/6 x 100 = 16.67

$TU_a = 16.7$

The following table details the results of the TMP tests for the last permit term. Since all data met the LC_{50}, a WET limit is not needed at this time and annual TMP testing should continue.

OUTFALL	DESCRIPT	SPECIES	SAMPLEDT	LC50	SURVIVAL	TU	TESTCOM	LAB
001	1st Annual Acute	A.b.	2/5/08	11.2	100	<8.9	100% survival in 11.2% effluent TUa <8.9	HRSD
001	1st Annual Acute	C.v.	2/5/08	11.2	100	<8.9	100% survival in 11.2% effluent	HRSD
001	2nd Annual Acute	C.v.	9/15/09	11.2	100	<8.9	100% survival in 11.2% effluent	HRSD
001	2nd Annual Acute	A.b.	9/15/09	11.2	100	<8.9	100% survival in 11.2% effluent	HRSD
001	3rd Annual Acute	C.v.	7/13/10	11.2	100	<8.9	100% survival in 11.2% effluent	HRSD

001	3rd Annual Acute	A.b.	7/13/10	11.2	100	<8.9	100% survival in 11.2% effluent	HRSD
001	4th Annual Acute	C.v.	11/12/11	11.2	100	<8.9	100% survival in 11.2% effluent	HRSD
001	4th Annual Acute	A.b.	11/12/11	11.2	100	<8.9	100% survival in 11.2% effluent	HRSD

C.v. - *Cyprinodon variegatus*
A.b. - *Americamysis bahia*

The following TMP language is recommended for the reissuance of the HRSD Army Base permit (VA0081230).

D. TOXICS MANAGEMENT PROGRAM (TMP)

1. Biological Monitoring

a. In accordance with the schedule in 2. below, the permittee shall conduct annual acute toxicity tests for the duration of the permit. The permittee shall collect 24-hour flow-proportioned composite samples of final effluent from outfall 001 in accordance with Part 1.A. of this permit. The acute tests to use are:

48 Hour Static Acute test using Americamysis bahia and
48 Hour Static Acute test using Cyprinodon variegatus

These acute tests shall be performed with a minimum of 5 dilutions, derived geometrically, for the calculation of a valid LC_{50}. Express the results as TU_a (Acute Toxic Units) by dividing 100/ LC_{50} for reporting. Both species should be analyzed at the same time from the 24-hour flow-proportioned composite sample. Toxicity samples shall be taken at the same time as the other chemical parameter monitoring listed in Part I.A. of this permit for outfall 001.

Test procedures and reporting shall be in accordance with the WET testing methods cited in 40 CFR 136.3.

b. The permittee may provide additional samples to address data variability during the period of initial data generation. These data shall be reported and may be included in the evaluation of the effluent toxicity. Test procedures and reporting shall be in accordance with the WET testing methods cited in 40 CFR 136.3.

c. The test dilutions shall be able to determine compliance with the following endpoints:

(1) Acute LC_{50} of 6% equivalent to a TU_a of 16.7

d. All applicable data will be evaluated for reasonable potential at the conclusion of the test period. The data may be evaluated sooner if requested by the permittee, or if toxicity has been noted. Should evaluation of the data indicate that a limit is needed, a WET limit and compliance schedule will be required and the toxicity tests of D.1.a. may be discontinued.

2. Reporting Schedule

The permittee shall report the results and supply **one** complete copy of the toxicity test reports to the Tidewater Regional Office in accordance with the schedule below. A complete report must contain a copy of all laboratory benchsheets, certificates of analysis, and all chains of custody.

(a)	Conduct first annual TMP test for outfall 001 using Americamysis bahia and Cyprinodon variegatus	By December 31, 2014
(b)	Submit results of all biological tests	Within 60 days of the sample date and no later than January 10, 2015
(c)	Conduct subsequent annual TMP tests for outfall 001 using Americamysis bahia and Cyprinodon variegatus	By December 31, 2015, 2016, and 2017
(d)	Submit subsequent annual biological tests	Within 60 days of the sample date and no later than January 10, 2016, 2017, and 2018

ATTACHMENT 9

RECEIVING WATERS INFO./
TIER DETERMINATION/STORET DATA/
STREAM MODELING

303(d) LISTED SEGMENTS

Planning Permit Review

Date: 5/24/2012

To: Jen Howell for Kristie Britt, TRO

Permit Writer: Deanna Austin

Facility: HRSD-Army Base STP

Permit Number: VA0081230

New or Renewal: Renewal

Permit Expiration Date: 1/27/2013

Waterbody ID: VAT G15 E Elizabeth River-All outfalls

Topo Name: 035A Norfolk North

Facility Address 401 Lagoon Road Norfolk, VA 23505

Receiving Stream:

Stream Name: Elizabeth River-Outfall 001	
Click here to enter text.	
Stream Data Requested? Click here to enter text.	
Outfall #: 001	**Lat Lon: 36 55 19 76 20 9**
Stream Name (2): Click here to enter text.	
All stormwater outfalls are not monitored-No Exposure Certifications have been given-No need for a tier determination	
Stream Data Requested? Click here to enter text.	

Planning Review:

303 (d): Indicate Outfalls which discharge directly to an impaired (Category 5) stream segment	
Outfall 001 discharges to impaired segment VAT-G15E_ELI03A08. Impairments include ALUS Open Water DO, estuarine benthics, and PCBs.	
Click here to enter text.	
Tier Determination	
Tier	The receiving stream is a Tier 1 water due to the impairments. See Attachment 1.
Tier	
Management Plan	
Is the facility Referenced in a Management Plan?	Yes, this facility is listed in the Virginia Water Quality Management Plan (VAC25-720-60C)
Are limits contained in a Management Plan?	Yes: TN 610,000 lbs/yr and TP 54,820 lbs/yr

Review will be completed in 30 days of receipt of request.

Additional Comments:

JSH 5/29/2012

TMDL Permit Review

Date: 5/24/2012

To: Jennifer Howell, TRO √ JSH 5/29/2012

Permit Writer: Deanna Austin

Facility: HRSD-Army Base STP

Permit Number: VA0081230

New or Renewal: Renewal

Permit Expiration Date: 1/27/2013

Waterbody ID: VAT G15 E Elizabeth River-All outfalls

Topo Name: 035A Norfolk North

Facility Address 401 Lagoon Road Norfolk VA 23505

Receiving Stream:

Stream Name: Elizabeth River-Outfall 001	
Click here to enter text.	
Stream Data Requested? Click here to enter text.	
Outfall #: 001	**Lat Lon: 36 55 19 76 20 9**
Stream Name (2): Click here to enter text.	
All stormwater outfalls are not monitored-No Exposure Certifications have been given	
Stream Data Requested? Click here to enter text.	

Is there a design flow change? If yes give the change. No change

TMDL Review:

Has a TMDL been approved that includes the receiving stream?	
Yes, the receiving stream falls within Chesapeake Bay segment ELIPH.	
If yes, Include TMDL Name, Pollutant(s) and date of approval:	
Chesapeake Bay TMDL: EPA approved 21/29/2010: nitrogen, phosphorous, and TSS	
Is the facility assigned a WLA from the TMDL?	**No, see below**
If Yes, what is the WLA?	
VA0081230 was listed in the Chesapeake Bay TMDL under Bay segment ELIPH as a non-significant discharger. Because an aggregated WLA exists, this permit did not receive an individual WLA. The aggregated WLA is presented as a delivered load for each of the impaired 92 Bay segments. (Appendix Q)	

Review will be completed in 30 days of receipt of request.

Additional Comments:

A PCB TMDL for the tidal James River and Elizabeth River has an anticipated completion date of 2014.

2010 Impaired Waters - 303(d) List

Category 5 - Waters needing Total Maximum Daily Load Study

James River Basin

Cause Group Code / Impaired Use	Water Name / Cause	Cause Category	Estuary (Sq. Miles)	Reservoir (Acres)	River (Miles)	Initial List Date	TMDL Dev. Date
APPTF-SAV-BAY	Appomattox River						
Aquatic Life	Aquatic Plants (Macrophytes)	5A	2.705			2006	2010
Shallow-Water Submerged Aquatic Vegetation	Aquatic Plants (Macrophytes)	5A	2.705			2006	2010
EBEMH-DO-BAY	Eastern Branch Elizabeth River, Broad Creek and Indian River						
Aquatic Life	Oxygen, Dissolved	5A	2.287			2006	2010
Open-Water Aquatic Life	Oxygen, Dissolved	5A	2.287			2006	2010
ELIPH-DO-BAY	Chesapeake Bay segment ELIPH (Elizabeth River Mainstem)						
Aquatic Life	Oxygen, Dissolved	5A	8.162			2006	2010
Open-Water Aquatic Life	Oxygen, Dissolved	5A	8.162			2006	2010
G01E-01-BAC	James River						
Recreation	Escherichia coli	5A	1.466			1996	2010
	Escherichia coli	5A	2.828			2006	2010
	Escherichia coli	5A	1.964			2008	2010
G01E-02-CHLA	James River						
Aquatic Life	Chlorophyll-a	5A	5.512			2008	2010
Open-Water Aquatic Life	Chlorophyll-a	5A	5.512			2008	2010
G01E-03-PCB	James River and Various Tributaries						
Fish Consumption	PCB in Fish Tissue	5A	62.773			2002	2014
	PCB in Fish Tissue	5A	1.837			2004	2016
	PCB in Fish Tissue	5A	191.816			2006	2018
	PCB in Fish Tissue	5D			7.50	2006	2018
	PCB in Fish Tissue	5A	0.012			2008	2014
	PCB in Fish Tissue	5A	0.003			2010	2018
G01L-01-BAC	Falling Creek Reservoir						
Recreation	Escherichia coli	5A		88.37		2008	2020
G01L-01-PH	Falling Creek Reservoir						
Aquatic Life	pH	5C		88.37		2010	2022
G01R-01-BAC	Goode Creek						
Recreation	Escherichia coli	5A			1.25	2006	2014
G01R-02-BAC	Almond Creek						
Recreation	Escherichia coli	5A			2.36	2006	2010
G01R-02-PH	XVO and XVP (Almond Creek, UTs)						
Aquatic Life	pH	5A			0.54	2004	2016
G01R-03-BAC	Falling Creek						
Recreation	Escherichia coli	5A			3.11	2006	2014
G01R-04-BAC	Falling Creek						
Recreation	Escherichia coli	5A			16.99	2006	2018
G01R-04-DO	Falling Creek						
Aquatic Life	Oxygen, Dissolved	5A			0.98	2008	2020

2010 Impaired Waters - 303(d) List

Category 5 - Waters needing Total Maximum Daily Load Study

James River Basin

Cause Group Code / Impaired Use	Water Name / Cause	Cause Category	Estuary (Sq. Miles)	Reservoir (Acres)	River (Miles)	Initial List Date	TMDL Dev. Date
G14R-01-PH	Carbell Swamp - Upper						
Aquatic Life	pH	5A			2.55	2002	2014
G14R-02-BAC	Carbell Swamp - Lower						
Recreation	Escherichia coli	5A			2.86	2010	2022
G14R-02-DO	Carbell Swamp - Lower						
Aquatic Life	Oxygen, Dissolved	5A			2.86	2008	2020
G15E-01-01-EBEN	Elizabeth River Southern Branch, Paradise, Saint Julian, New Mill and Deep Creeks & unsegmented estuaries in SBEMH						
Aquatic Life	Estuarine Bioassessments	5A	2.256			2004	2016
	Estuarine Bioassessments	5A	0.854			2006	2018
G15E-01-01-TCDD	Elizabeth River Southern Branch and its tidal tributaries						
Fish Consumption	Dioxin (including 2,3,7,8-TCDD)	5A	3.137			2010	2022
G15E-02-02-BAC	Elizabeth River Upper Mainstem, Eastern Branch, Broad Creek, Southern Branch and Paradise Creek						
Recreation	Enterococcus	5A	1.979			1998	2010
	Enterococcus	5A	0.539			2006	2018
G15E-02-04-EBEN	Eastern Branch Elizabeth River, Broad Creek and Indian River						
Aquatic Life	Estuarine Bioassessments	5A	1.759			2004	2016
	Estuarine Bioassessments	5A	0.586			2006	2018
G15E-02-05-BAC	Indian River tributary of Eastern Branch, Elizabeth River						
Recreation	Enterococcus	5A	0.268			2002	2014
G15E-03-01-EBEN	Elizabeth River Mainstem						
Aquatic Life	Estuarine Bioassessments	5A	4.528			2004	2016
	Estuarine Bioassessments	5A	3.440			2010	2022
G15E-04-01-BAC	Western Branch, Elizabeth River						
Recreation	Enterococcus	5A	2.021			2004	2016
G15E-04-02-EBEN	Western Branch Elizabeth River and Unsegmented estuaries in WBEMH						
Aquatic Life	Estuarine Bioassessments	5A	0.562			2006	2018
	Estuarine Bioassessments	5A	2.166			2010	2022
G15E-05-02-BAC	Lafayette River						
Recreation	Enterococcus	5A	1.558			2002	2014
G15E-06-01-BAC	Hampton River						
Recreation	Enterococcus	5A	0.545			2010	2022
G15E-06-03-BAC	Hoffler Creek						
Recreation	Enterococcus	5A	0.057			2008	2020
H01R-01-HG	James River						
Fish Consumption	Mercury in Fish Tissue	5A			15.55	2010	2022
H02R-01-BAC	Pedlar River						
Recreation	Escherichia coli	5A			9.46	2006	2018

Appendix A - List of Impaired (Category 5) Waters in 2010

James River Basin

Cause Group Code: **ELIPH-DO-BAY** **Chesapeake Bay segment ELIPH (Elizabeth River Mainstem)**

Location: This cause encompasses the complete CPB segment ELIPH

City / County: Norfolk City Portsmouth City

Use(s): Aquatic Life Open-Water Aquatic Life

Cause(s) / VA Category: Oxygen, Dissolved / 5A

The Aquatic Life and Open-Water Aquatic Life Uses are impaired based on failure to meet the CBP dissolved oxygen criteria for Open Water - Summer & "Rest of Year (ROY) for the 2008 IR cycle. The 30-day dissolved oxygen criteria for open water use failed for the 2008 assessment. There is insufficient data to assess remaining shorter-term dissolved oxygen criteria for this use.

Chesapeake Bay segment ELIPH (Elizabeth River Mainstem) **Aquatic Life**	Estuary (Sq. Miles)	Reservoir (Acres)	River (Miles)
Oxygen, Dissolved - Total Impaired Size by Water Type:	**8.162**		

Chesapeake Bay segment ELIPH (Elizabeth River Mainstem) **Open-Water Aquatic Life**	Estuary (Sq. Miles)	Reservoir (Acres)	River (Miles)
Oxygen, Dissolved - Total Impaired Size by Water Type:	**8.162**		

Sources:

Agriculture	Atmospheric Deposition - Nitrogen	Industrial Point Source Discharge	Internal Nutrient Recycling
Loss of Riparian Habitat	Municipal Point Source Discharges	Sources Outside State Jurisdiction or Borders	Wet Weather Discharges (Non-Point Source)
Wet Weather Discharges (Point Source and Combination of Stormwater, SSO or CSO)			

Appendix A - List of Impaired (Category 5) Waters in 2010

James River Basin

Cause Group Code: **G01E-03-PCB** **James River and Various Tributaries**

Location: Estuarine James River from the fall line to the Hampton Roads Bridge Tunnel, including several tributaries listed below: Appomattox River up to Lake Chesdin Dam
Bailey Creek up to Route 630
Bailey Bay
Chickahominy River up to Walkers Dam
Skiffes Creek up to Skiffes Creek Dam
Pagan River and its tributary Jones Creek
Chuckatuck Creek
Nansemond River and its tributaries Bennett Creek and Star Creek
Hampton River
Willoughby Bay and the Elizabeth R. system (Western, Eastern, and Southern Branches and Lafayette R.) and tributaries St. Julian Creek, Deep Creek, and Broad Creek

City / County:

Charles City Co.	Chesapeake City	Chesterfield Co.	Colonial Heights City	Dinwiddie Co.
Hampton City	Henrico Co.	Hopewell City	Isle Of Wight Co.	James City Co.
New Kent Co.	Newport News City	Norfolk City	Petersburg City	Portsmouth City
Prince George Co.	Richmond City	Suffolk City	Surry Co.	Virginia Beach City
Williamsburg City				

Use(s): Fish Consumption

Cause(s) / VA Category: PCB in Fish Tissue / 5A PCB in Fish Tissue / 5D

The Fish Consumption Use is impaired based on the VDH fish consumption advisory for PCBs fish tissue contamination within the James River and select tidal tributaries, issued 12/13/04. During the 2002 cycle, the James River from the Fall line to Queens Creek was considered not supporting of the Fish Consumption Use due to PCBs in multiple fish species at multiple DEQ monitoring locations.

During the 2004 cycle, a VDH Fish Consumption Restriction was issued from the fall line to Flowerdew Hundred and the segment was adjusted slightly to match the Restriction.

However, during the 2006 cycle, the restriction was extended on 12/13/2004 to extend from the I-95 bridge downstream to the Hampton Roads Bridge Tunnel and include the tidal portions of the following tributaries:

Appomattox River up to Lake Chesdin Dam
Bailey Creek up to Route 630
Bailey Bay
Chickahominy River up to Walkers Dam
Skiffes Creek up to Skiffes Creek Dam
Pagan River and its tributary Jones Creek
Chuckatuck Creek
Nansemond River and its tributaries Bennett Creek and Star Creek
Hampton River
Willoughby Bay and the Elizabeth R. system (Western, Eastern, and Southern Branches and Lafayette R.) and tributaries St. Julian Creek, Deep Creek, and Broad Creek

Appendix A - List of Impaired (Category 5) Waters in 2010

James River Basin

The advisory was modified again on 10/10/2006 to add Poythress Run.

James River and Various Tributaries **Fish Consumption**	Estuary (Sq. Miles)	Reservoir (Acres)	River (Miles)
PCB in Fish Tissue - Total Impaired Size by Water Type:	**256.441**		**7.50**

Sources:

Contaminated Sediments	Source Unknown	Sources Outside State Jurisdiction or Borders

Appendix A - List of Impaired (Category 5) Waters in 2010

James River Basin

Cause Group Code: **G15E-03-01-EBEN** **Elizabeth River Mainstem**

Location: This cause encompasses the entirety of the Elizabeth River Mainstem. CBP segment SBEMH. BIBI segment ELIMHa.

City / County: Norfolk City Portsmouth City

Use(s): Aquatic Life

Cause(s) /
VA Category: Estuarine Bioassessments / 5A

The Aquatic Life Use is impaired based on failure to meet a statistical evaluation constituting an un-impacted benthic organism population per CBP (Benthic-BIBI) analysis. The source/stressor tool yielded an unknown source for the impairment. This segment was previously included (2004 IR) in TMDL ID: VAT-G15E-01-09.
The TMDL due date is carried from the previous 2004 IR impairment identification date.
Previous Use ID = VAT-G15E-01-09 for benthic impairment.

This Cause Code (G15E-03-01-EBEN) relates to all benthic impairments within the Elizabeth River system.

Elizabeth River Mainstem **Aquatic Life**	Estuary (Sq. Miles)	Reservoir (Acres)	River (Miles)
Estuarine Bioassessments - Total Impaired Size by Water Type:	**7.968**		

Sources:

Contaminated Sediments Source Unknown

ATTACHMENT 10

TABLE III(a) AND TABLE III(b) - CHANGE SHEETS

TABLE III(a)

VPDES PERMIT PROGRAM
Permit Processing Change Sheet

1. Effluent Limits and Monitoring Schedule: (List any changes FROM PREVIOUS PERMIT and give a brief rationale for the changes).

OUTFALL NUMBER	PARAMETER CHANGED	MONITORING LIMITS CHANGED FROM / TO	EFFLUENT LIMITS CHANGED FROM / TO	RATIONALE	DATE & INITIAL

F OTHER CHANGES:	COMMENTS:	DATE & INITIAL
Changed boilerplate language to include the VELAP information		5/30/12 DDA
Changed special condition C.11 (Sludge Management Plan) to not have a VDH reference since they no longer are involved in the program.		5/30/12 DDA
QL changed for BOD from 5 mg/l to 2 mg/l.	Changed to be consistent with other HRSD permits.	5/30/12 DDA

TABLE III(b)

VPDES PERMIT PROGRAM
Permit Processing Change Sheet

1. Effluent Limits and Monitoring Schedule: (List any changes MADE DURING PERMIT PROCESS and give a brief rationale for the changes).

OUTFALL NUMBER	PARAMETER CHANGED	MONITORING LIMITS CHANGED FROM / TO	EFFLUENT LIMITS CHANGED FROM / TO	RATIONALE	DATE & INITIAL
001					

OTHER CHANGES FROM:	CHANGED TO:	DATE & INITIAL

ATTACHMENT 11

EPA PERMIT CHECKLIST

State "Transmittal Checklist" to Assist in Targeting Municipal and Industrial Individual NPDES Draft Permits for Review

Part I. State Draft Permit Submission Checklist

In accordance with the MOA established between the Commonwealth of Virginia and the United States Environmental Protection Agency, Region III, the Commonwealth submits the following draft National Pollutant Discharge Elimination System (NPDES) permit for Agency review and concurrence.

Facility Name: HRSD-Army Base STP

NPDES Permit Number: VA0081230

Permit Writer Name: Deanna Austin

Date: 5/30/12

Major [X] **Minor** [ ] **Industrial** [ ] **Municipal** [X]

I.A. Draft Permit Package Submittal Includes:	**Yes**	**No**	**N/A**
1. Permit Application?	X		
2. Complete Draft Permit (for renewal or first time permit – entire permit, including boilerplate information)?	X		
3. Copy of Public Notice?		X	
4. Complete Fact Sheet?	X		
5. A Priority Pollutant Screening to determine parameters of concern?	X		
6. A Reasonable Potential analysis showing calculated WQBELs?	X		
7. Dissolved Oxygen calculations?			X
8. Whole Effluent Toxicity Test summary and analysis?	X		
9. Permit Rating Sheet for new or modified industrial facilities?			X

I.B. Permit/Facility Characteristics	**Yes**	**No**	**N/A**
1. Is this a new, or currently unpermitted facility?		X	
2. Are all permissible outfalls (including combined sewer overflow points, non-process water and storm water) from the facility properly identified and authorized in the permit?	X		
3. Does the fact sheet **or** permit contain a description of the wastewater treatment process?	X		
I.B. Permit/Facility Characteristics – cont.	**Yes**	**No**	**N/A**
4. Does the review of PCS/DMR data for at least the last 3 years indicate significant non-compliance with the existing permit?		X	
5. Has there been any change in streamflow characteristics since the last permit was developed?		X	

6. Does the permit allow the discharge of new or increased loadings of any pollutants?		X	
7. Does the fact sheet **or** permit provide a description of the receiving water body(s) to which the facility discharges, including information on low/critical flow conditions and designated/existing uses?	X		
8. Does the facility discharge to a 303(d) listed water?	X		
a. Has a TMDL been developed and approved by EPA for the impaired water?	X		
b. Does the record indicate that the TMDL development is on the State priority list and will most likely be developed within the life of the permit?			X
c. Does the facility discharge a pollutant of concern identified in the TMDL or 303(d) listed water?	X		
9. Have any limits been removed, or are any limits less stringent, than those in the current permit?		X	
10. Does the permit authorize discharges of storm water?	X		
11. Has the facility substantially enlarged or altered its operation or substantially increased its flow or production?		X	
12. Are there any production-based, technology-based effluent limits in the permit?	X		
13. Do any water quality-based effluent limit calculations differ from the State's standard policies or procedures?		X	
14. Are any WQBELs based on an interpretation of narrative criteria?		X	
15. Does the permit incorporate any variances or other exceptions to the State's standards or regulations?		X	
16. Does the permit contain a compliance schedule for any limit or condition?		X	
17. Is there a potential impact to endangered/threatened species or their habitat by the facility's discharge(s)?		X	
18. Have impacts from the discharge(s) at downstream potable water supplies been evaluated?	X		
19. Is there any indication that there is significant public interest in the permit action proposed for this facility?		X	
20. Have previous permit, application, and fact sheet been examined?	X		

Part II. NPDES Draft Permit Checklist

Region III NPDES Permit Quality Checklist – for POTWs

(To be completed and included in the record only for POTWs)

II.A. Permit Cover Page/Administration	Yes	No	N/A
1. Does the fact sheet or permit describe the physical location of the facility, including latitude and longitude (not necessarily on permit cover page)?	X		
2. Does the permit contain specific authorization-to-discharge information (from where to where, by whom)?	X		

II.B. Effluent Limits – General Elements	Yes	No	N/A
1. Does the fact sheet describe the basis of final limits in the permit (e.g., that a comparison of technology and water quality-based limits was performed, and the most stringent limit selected)?	X		
2. Does the fact sheet discuss whether "ant backsliding" provisions were met for any limits that are less stringent than those in the previous NPDES permit?			X

II.C. Technology-Based Effluent Limits (POTWs)	Yes	No	N/A
1. Does the permit contain numeric limits for ALL of the following: BOD (or alternative, e.g., CBOD, COD, TOC), TSS, and pH?	X		
2. Does the permit require at least 85% removal for BOD (or BOD alternative) and TSS (or 65% for equivalent to secondary) consistent with 40 CFR Part 133?	X		
a. If no, does the record indicate that application of WQBELs, or some other means, results in more stringent requirements than 85% removal or that an exception consistent with 40 CFR 133.103 has been approved?			
3. Are technology-based permit limits expressed in the appropriate units of measure (e.g., concentration, mass, SU)?	X		
4. Are permit limits for BOD and TSS expressed in terms of both long term (e.g., average monthly) and short term (e.g., average weekly) limits?	X		
5. Are any concentration limitations in the permit less stringent than the secondary treatment requirements (30 mg/l BOD5 and TSS for a 30-day average and 45 mg/l BOD5 and TSS for a 7-day average)?		X	
a. If yes, does the record provide a justification (e.g., waste stabilization pond, trickling filter, etc.) for the alternate limitations?			X

II.D. Water Quality-Based Effluent Limits	Yes	No	N/A
1. Does the permit include appropriate limitations consistent with 40 CFR 122.44(d) covering State narrative and numeric criteria for water quality?	X		
2. Does the fact sheet indicate that any WQBELs were derived from a completed and EPA approved TMDL?			X
II.D. Water Quality-Based Effluent Limits – cont.	**Yes**	**No**	**N/A**
3. Does the fact sheet provide effluent characteristics for each outfall?	X		

4. Does the fact sheet document that a "reasonable potential" evaluation was performed?	X		
a. If yes, does the fact sheet indicate that the "reasonable potential" evaluation was performed in accordance with the State's approved procedures?	X		
b. Does the fact sheet describe the basis for allowing or disallowing in-stream dilution or a mixing zone?	X		
c. Does the fact sheet present WLA calculation procedures for all pollutants that were found to have "reasonable potential"?			X
d. Does the fact sheet indicate that the "reasonable potential" and WLA calculations accounted for contributions from upstream sources (i.e., do calculations include ambient/background concentrations)?	X		
e. Does the permit contain numeric effluent limits for all pollutants for which "reasonable potential" was determined?			X
5. Are all final WQBELs in the permit consistent with the justification and/or documentation provided in the fact sheet?	X		
6. For all final WQBELs, are BOTH long-term AND short-term effluent limits established?		X	
7. Are WQBELs expressed in the permit using appropriate units of measure (e.g., mass, concentration)?	X		
8. Does the record indicate that an "antidegradation" review was performed in accordance with the State's approved antidegradation policy?	X		

II.E. Monitoring and Reporting Requirements	Yes	No	N/A
1. Does the permit require at least annual monitoring for all limited parameters and other monitoring as required by State and Federal regulations?	X		
a. If no, does the fact sheet indicate that the facility applied for and was granted a monitoring waiver, AND, does the permit specifically incorporate this waiver?			
2. Does the permit identify the physical location where monitoring is to be performed for each outfall?	X		
3. Does the permit require at least annual influent monitoring for BOD (or BOD alternative) and TSS to assess compliance with applicable percent removal requirements?		X	
4. Does the permit require testing for Whole Effluent Toxicity?	X		

II.F. Special Conditions	Yes	No	N/A
1. Does the permit include appropriate biosolids use/disposal requirements?	X		
2. Does the permit include appropriate storm water program requirements?	X		

II.F. Special Conditions – cont.	Yes	No	N/A
3. If the permit contains compliance schedule(s), are they consistent with statutory and regulatory deadlines and requirements?			X
4. Are other special conditions (e.g., ambient sampling, mixing studies, TIE/TRE, BMPs, special studies) consistent with CWA and NPDES regulations?	X		

5. Does the permit allow/authorize discharge of sanitary sewage from points other than the POTW outfall(s) or CSO outfalls [i.e., Sanitary Sewer Overflows (SSOs) or treatment plant bypasses]?		X	
6. Does the permit authorize discharges from Combined Sewer Overflows (CSOs)?		X	
a. Does the permit require implementation of the "Nine Minimum Controls"?			X
b. Does the permit require development and implementation of a "Long Term Control Plan"?			X
c. Does the permit require monitoring and reporting for CSO events?			X
7. Does the permit include appropriate Pretreatment Program requirements?	X		

II.G. Standard Conditions	Yes	No	N/A
1. Does the **permit** contain all 40 CFR 122.41 standard conditions or the State equivalent (or more stringent) conditions?	X		

List of Standard Conditions – 40 CFR 122.41

Duty to comply
Duty to reapply
Need to halt or reduce activity not a defense
Duty to mitigate
Proper O & M
Permit actions

Property rights
Duty to provide information
Inspections and entry
Monitoring and records
Signatory requirement
Bypass
Upset

Reporting Requirements
- Planned change
- Anticipated noncompliance
- Transfers
- Monitoring reports
- Compliance schedules
- 24-Hour reporting
- Other non-compliance

2. Does the permit contain the additional standard condition (or the State equivalent or more stringent conditions) for POTWs regarding notification of new introduction of pollutants and new industrial users [40 CFR 122.42(b)]?	X		

Part III. Signature Page

Based on a review of the data and other information submitted by the permit applicant, and the draft permit and other administrative records generated by the Department/Division and/or made available to the Department/Division, the information provided on this checklist is accurate and complete, to the best of my knowledge.

Name	Deanna Austin
Title	Environmental Specialist Senior II
Signature	
Date	5/30/12

ATTACHMENT 12

CHRONOLOGY SHEET

Chronology

Wednesday, May 30, 2012

Facility Name: HRSD - Army Base Sewage Treatment Plant *VA0081230*

Event	*Date*	*Comment*
Application fee deposited:	—	NA-Reissuance
First Application Reminder Phone Call:	—	NA-App received 5/21/12
Second Application Reminder Phone Call:	—	NA-App received 5/21/12
Site visit:	— 1/25/2011	By Steve Long
Site inspection report:	— 2/9/2011	
Application received at RO 1st time:	— 5/21/2012	
Public notice authorization received from owner:	— 5/21/2012	
App sent to State Agencies (list in comment field):	— 5/24/2012	VDH, DSS and VMRC
App complete letter sent to permittee:	— 5/30/2012	
Application Administratively complete:	— 5/30/2012	
Application totally / technically complete:	— 5/30/2012	
Draft permit developed:	— 5/30/2012	
Old expiration date:	— 1/27/2013	
Permit effective:	— 1/28/2013	
First DMR due:	— 3/10/2013	
Permit expires:	— 1/27/2018	