VPDES PERMIT PROGRAM FACT SHEET

This document gives pertinent information concerning the VPDES Permit listed below. This permit is being processed as a **MAJOR, INDUSTRIAL** permit.

1. **PERMIT NO.**: VA0003433 **EXPIRATION DATE**: 12/11/2012

2. **FACILITY NAME AND LOCAL MAILING ADDRESS**

Hercules Incorporated
27123 Shady Brook Trail
Courtland, VA 23837

FACILITY LOCATION ADDRESS (IF DIFFERENT)

Same

CONTACT AT FACILITY:
NAME: Sean ~~Mconaghy~~ Mcconaghy
TITLE: EHS Manager
PHONE: (757) 569-2976
EMAIL: smmaconoaghy@ashland.com

CONTACT AT LOCATION ADDRESS
NAME: Same
TITLE:
PHONE:
EMAIL:

3. **OWNER CONTACT**: (TO RECEIVE PERMIT)
NAME: Andrew B. Chapman
TITLE: Plant Manager
COMPANY NAME: Same
ADDRESS: Same
PHONE: (757) 569-2976
EMAIL:

CONSULTANT CONTACT:
NAME: Cathy Warner
FIRM NAME: One Environmental Group
ADDRESS:
PHONE: (804) 303-8784
EMAIL: cwarner@oneenv.com

4. **PERMIT DRAFTED BY**: DEQ, Water Permits, Regional Office

Permit Writer(s): Sauer Date(s): 1/2013
Reviewed By: Deanna Austin Date(s): 1/29/13

5. **PERMIT ACTION:**

( ) Issuance (X) Reissuance ( ) Revoke & Reissue ( ) Owner Modification
( ) Board Modification ( ) Change of Ownership/Name [Effective Date:]

6. **SUMMARY OF SPECIFIC ATTACHMENTS LABELED AS:**

Attachment 1	Site Inspection Report/Memorandum
Attachment 2	Discharge Location/Topographic Map
Attachment 3	Schematic/Plans & Specs/Site Map/Water Balance
Attachment 4	TABLE I - Discharge/Outfall Description
Attachment 5	TABLE II - Effluent Monitoring/Limitations
Attachment 6	Effluent Limitations/Monitoring Rationale/Suitable Data/Antidegradation/Antibacksliding
Attachment 7	Special Conditions Rationale
Attachment 8	Toxics Monitoring/Toxics Reduction/WET Limit Rationale
Attachment 9	Material Stored
Attachment 10	Receiving Waters Info./Tier Determination/STORET Data/Stream Modeling/303(d) Listed Segments
Attachment 11	TABLE III(a) and TABLE III(b) - Change Sheets
Attachment 12	NPDES Industrial Permit Rating Worksheet and EPA Permit Checklist
Attachment 13	Chronology Sheet
Attachment 14	Public Participation

APPLICATION COMPLETE: 11/1/12, upon additional information from applicant

7. **PERMIT CHARACTERIZATION**: (Check as many as appropriate)

(X) Existing Discharge
( ) Proposed Discharge
( ) Municipal
SIC Code(s)
(X) Industrial
SIC Code(s)2861,2869,2899
( ) POTW
( ) PVOTW
(X) Private
( ) Federal
( ) State
( ) Publicly-Owned Industrial

(X) Effluent Limited
(X) Water Quality Limited
(X) WET Limit
( ) Interim Limits in Permit
( ) Interim Limits in Other Document
( ) Compliance Schedule Required
( ) Site Specific WQ Criteria
( ) Variance to WQ Standards
( ) Water Effects Ratio
(X) Discharge to 303(d) Listed Segment
(X) Toxics Management Program Required
( ) Toxics Reduction Evaluation
(X) Storm Water Management Plan
( ) Pretreatment Program Required
(X) Possible Interstate Effect
( ) CBP Significant Dischargers List

8. **RECEIVING WATERS CLASSIFICATION**: River basin information.

Outfall No(s): 002, 201, 902

Receiving Stream:	Nottoway River
River Mile:	15.74
Basin:	Chowan and Dismal Swamp
Subbasin:	Chowan River
Section:	1
Class:	II
Special Standard(s):	NEW-21
Tidal:	YES
7-Day/10-Year Low Flow:	19.38 MGD
1-Day/10-Year Low Flow:	18.09 MGD
30-Day/5-Year Low Flow:	42 MGD
Harmonic Mean Flow:	203 MGD

Outfall No(s): 003, 004, 005, 006 (004-old condensate ditch; 005-natural swale; 006-old outfall 001)

Receiving Stream:	Wills Gut to the Nottoway River
River Mile:	15.79
Basin:	Chowan and Dismal Swamp
Subbasin:	Chowan River
Section:	2b
Class:	III
Special Standard(s):	none
Tidal:	NO
7-Day/10-Year Low Flow:	0 MGD
1-Day/10-Year Low Flow:	0 MGD
30-Day/5-Year Low Flow:	0 MGD
Harmonic Mean Flow:	0 MGD

9. **FACILITY DESCRIPTION:** Describe the type facility from which the discharges originate.

EXISTING industrial discharge resulting from the following operations: manufacturing of paper sizing agents and organic peroxide.

10. **LICENSED OPERATOR REQUIREMENTS**: ( ) No (X) Yes Class: **II**

11. **RELIABILITY CLASS:** Industrial Facility - NA

12. **SITE INSPECTION DATE:** 11/9/11 **REPORT DATE:** 11/16/11

Performed By: Kidd

SEE ATTACHMENT 1

13. **DISCHARGE(S) LOCATION DESCRIPTION:** Provide USGS Topo which indicates the discharge location, significant (large) discharger(s) to the receiving stream, water intakes, and other items of interest.

Name of Topo: Courtland and Franklin topos Quadrant No.: 6A & 5B **SEE ATTACHMENT 2**

14. **ATTACH A SCHEMATIC OF THE WASTEWATER TREATMENT SYSTEM(S) [IND. & MUN.]. FOR INDUSTRIAL FACILITIES, PROVIDE A GENERAL DESCRIPTION OF THE PRODUCTION CYCLE(S) AND ACTIVITIES. FOR MUNICIPAL FACILITIES, PROVIDE A GENERAL DESCRIPTION OF THE TREATMENT PROVIDED.**

SEE ATTACHMENT 3 (CAN ALSO REFERENCE TABLE I)

15. **DISCHARGE DESCRIPTION:** Describe each discharge originating from this facility.

SEE **TABLE I** (OR CAN SUBSTITUTE PAGE 2C) - **SEE ATTACHMENT 4**

16. **COMBINED TOTAL FLOW:**

TOTAL: 5 MGD (for public notice)

PROCESS FLOW: 4.9 MGD (IND.)

NONPROCESS/RAINFALL DEPENDENT FLOW: 0.1 (Est.)

DESIGN FLOW: _____ MGD (MUN.)

17. **STATUTORY OR REGULATORY BASIS FOR EFFLUENT LIMITATIONS AND SPECIAL CONDITIONS:** (Check all which are appropriate)

X State Water Control Law
X Clean Water Act
X VPDES Permit Regulation (9 VAC 25-31-10 et seq.)
X EPA NPDES Regulation (Federal Register)
X EPA Effluent Guidelines (40 CFR 133 or 400 - 471)
X Water Quality Standards (9 VAC 25-260-5 et seq.)
_____ Wasteload Allocation from a TMDL or River Basin Plan

18. **EFFLUENT LIMITATIONS/MONITORING:** Provide all limitations and monitoring requirements being placed on each outfall.

SEE TABLE II - ATTACHMENT 5

19. **EFFLUENT LIMITATIONS/MONITORING RATIONALE**: Attach any analyses of an outfall by individual toxic parameter. As a minimum, it will include: statistics summary (number of data values, quantification level, expected value, variance, covariance, 97th percentile, and statistical method); wasteload allocation (acute, chronic and human health); effluent limitations determination; input data listing. Include all calculations used for each outfall and set of effluent limits and those used in any model(s). Include all calculations/documentation of any antidegradation or anti-backsliding issues in the development of any limitations; complete the review statements below. Provide a rationale for limiting internal waste streams and indicator pollutants. Attach chlorine mass balance calculations, if performed. Attach any additional information used to develop the limitations, including any applicable water quality standards calculations (acute, chronic and human health).

OTHER CONSIDERATIONS IN LIMITATIONS DEVELOPMENT:

VARIANCES/ALTERNATE LIMITATIONS: Provide justification or refutation rationale for requested variances or alternatives to required permit conditions/limitations. This includes, but is not limited to: waivers from testing requirements; variances from technology guidelines or water quality standards; WER/translator study consideration; variances from standard permit limits/conditions.

A translator study was performed and approved for copper at outfall 002; see Attachment 6.

SUITABLE DATA: In what, if any, effluent data were considered in the establishment of effluent limitations and provide all appropriate information/calculations.

All suitable effluent data were reviewed.

ANTIDEGRADATION REVIEW: Provide all appropriate information/calculations for the antidegradation review.

The receiving stream has been classified as tier 2; therefore, no significant degradation of the existing water quality will be allowed. See antidegradation calculations/determinations.

ANTIBACKSLIDING REVIEW: Indicate if antibacksliding applies to this permit and, if so, provide all appropriate information.

There are no backsliding issues to address in this permit (i.e., limits as stringent or more stringent when compared to the previous permit). BOD/TSS technology based limits were recalculated in accordance with 40 CFR 454; antibacksliding does not apply to technology based limits set in accordance with Federal Effluent Guidelines.

SEE ATTACHMENT 6

20. **SPECIAL CONDITIONS RATIONALE**: Provide a rationale for each of the permit's special conditions.

SEE ATTACHMENT 7

21. **TOXICS MONITORING/TOXICS REDUCTION AND WET LIMIT SPECIAL CONDITIONS RATIONALE**: Provide the justification for any toxics monitoring program and/or toxics reduction program and WET limit.

SEE ATTACHMENT 8

22. **SLUDGE DISPOSAL PLAN**: Provide a description of the sludge disposal plan (e.g., type sludge, treatment provided and disposal method). Indicate if any of the plan elements are included within the permit.

Waste sludge is de-watered on a belt filter press for disposal at a landfill.

23. **MATERIAL STORED**: List the type and quantity of wastes, fluids, or pollutants being stored at this facility. Briefly describe the storage facilities and list, if any, measures taken to prevent the stored material from reaching State waters.

SEE ATTACHMENT 9

24. **RECEIVING WATERS INFORMATION**: Refer to the State Water Control Board's Water Quality Standards [e.g., River Basin Section Tables (9 VAC 25-260-5 et seq.). **Use 9 VAC 25-260-140 C (introduction and numbered paragraph) to address tidal waters where fresh water standards would be applied or transitional waters where the most stringent of fresh or salt water standards would be applied.** Attach any memoranda or other information which helped to develop permit conditions (i.e. tier determinations, PReP complaints, special water quality studies, STORET data and other biological and/or chemical data, etc.

SEE ATTACHMENT 10

25 305(b)/**303(d) Listed Segments**: Indicate if the facility discharges to a segment that is listed on the current 303(d) list and, if so, provide all appropriate information/calculations.

This facility discharges directly to Nottoway River. This receiving stream segment has been listed in Category 5 of the 305(b)/303(d) list for non-attainment of fish consumption for mercury. A TMDL has not been prepared or approved for this stream segment. The permit contains a TMDL reopener clause which will allow the it to be modified, in compliance with Section 303(d)(4) of the Act once a TMDL is approved.

26. **CHANGES TO PERMIT**: Use **TABLE III(a)** to record any changes from the previous permit and the rationale for those changes. Use **TABLE III(b)** to record any changes made to the permit during the permit processing period and the rationale for those changes [i.e., use for comments from the applicant, VDH, EPA, other agencies and/or the public where comments resulted in changes to the permit limitations or any other changes associated with the special conditions or reporting requirements].

SEE ATTACHMENT 11

27. **NPDES INDUSTRIAL PERMIT RATING WORKSHEET**:

TOTAL SCORE: 100 **SEE ATTACHMENT 12**

28. **DEQ PLANNING COMMENTS RECEIVED ON DRAFT PERMIT**: Document any comments received from DEQ planning.

The discharge is not addressed in any planning document but will be included when the plan is updated.

29. **PUBLIC PARTICIPATION**: Document comments/responses received during the public participation process. If comments/responses provided, especially if they result in changes to the permit, place in the attachment.

VDH/DSS COMMENTS RECEIVED ON DRAFT PERMIT: Document any comments received from the Virginia Dept. of Health and the Div. of Shellfish Sanitation and noted how resolved.

The VDH reviewed the application and waived their right to comment and/or object on the adequacy of the draft permit.

The DSS has no comments on the application/draft permit as this discharge does not go to shellfish waters.

EPA COMMENTS RECEIVED ON DRAFT PERMIT: Document any comments received from the U.S. Environmental Protection Agency and noted how resolved.

EPA has no objections to the adequacy of the draft permit.

ADJACENT STATE COMMENTS RECEIVED ON DRAFT PERMIT: Document any comments received from an adjacent state and noted how resolved.

The draft permit was sent to North Carolina DENR and no comments were received.

OTHER AGENCY COMMENTS RECEIVED ON DRAFT PERMIT: Document any comments received from any other agencies (e.g., VIMS, VMRC, DGIF, etc.) and noted how resolved.

Not Applicable.

OTHER COMMENTS RECEIVED FROM RIPARIAN OWNERS/CITIZENS ON DRAFT PERMIT: Document any comments received from other sources and note how resolved.

The application and draft permit have received public notice in accordance with the VPDES Permit Regulation, and no comments were received.

PUBLIC NOTICE INFORMATION: Comment Period: Start Date March 1, 2013
End Date March 31, 2013

Persons may comment in writing or by e-mail to the DEQ on the proposed issuance/ reissuance/modification of the permit within 30 days from the date of the first notice. Address all comments to the contact person listed below. Written or e-mail comments shall include the name, address, and telephone number of the writer, and shall contain a complete, concise statement of the factual basis for comments. Only those comments received within this period will be considered. The Director of the DEQ may decide to hold a public hearing if public response is significant. Requests for public hearings shall state the reason why a hearing is requested, the nature of the issues proposed to be raised in the public hearing and a brief explanation of how the requestor's interests would be directly and adversely affected by the proposed permit action.

All pertinent information is on file and may be inspected, and arrangements made for copying by contacting Mark H. Sauer at: Department of Environmental Quality (DEQ), Tidewater Regional Office, 5636 Southern Boulevard, Virginia Beach, VA 23462. Telephone: 757-518-2105; e-mail: mark.sauer@deq.virginia.gov

Following the comment period, the Board will make a determination regarding the proposed issuance/reissuance/modification. This determination will become effective, unless the Director grants a public hearing. Due notice of any public hearing will be given.

30. **ADDITIONAL FACT SHEET COMMENTS/PERTINENT INFORMATION:**

ATTACHMENT 1

SITE INSPECTION REPORT/MEMORANDUM

Facility:	ASHLAND HERCULES WATER TECHNOLOGIES
County/city:	SOUTHAMPTON COUNTY

VPDES NO.	VA0003433

DEPARTMENT OF ENVIRONMENTAL QUALITY
WASTEWATER FACILITY
INSPECTION REPORT
PART 1

Inspection date:	**November 9, 2011**	Date form completed:	**November 16, 2011**
Inspection by:	**Mark R. Kidd**	Inspection agency:	**DEQ/TRO**
Time spent:		Announced Inspection:	[ ] Yes [✓] No
Reviewed by: **Kenneth T. Raum / 11-21-11** KTR		Photographs taken at site?	[✓] Yes [ ] No
Present at inspection:	**Paul Smith and Deanna Austin – DEQ, Sean Maconaghy – Ashland Hercules**		

FACILITY TYPE:	FACILITY CLASS:
( ) Municipal	(✓) Major
(✓) Industrial	( ) Minor
( ) Federal	( ) Small
( ) VPA/NDC	( ) High Priority ( ) Low Priority

TYPE OF INSPECTION:					
Routine	✓	Reinspection		Compliance/assistance/complaint	
Date of previous inspection:	**March 18, 2010**	Agency:	**DEQ/TRO**		

Population Served:		Connections Served	

Last Month Average: Influent	BOD_5 (mg/l)		TSS (mg/l)		Flow (MGD)			
	Other:							
Average Effluent: September 2011 Outfall 002	BOD_5 (mg/l)	**< 2**	Total P (mg/l)	**1.0**	Flow (MGD)	**4.08**	Total N (mg/l)	**0.30**
	Other: **pH(SU) – 7.94**							
Average Effluent: September 2011 Outfall 201	BOD_5 (mg/l)	**21**	TSS (mg/l)	**15**	Flow (MGD)	**.089**	NH_3 (mg/l)	
	Other:							

Data verified in preface:	Updated?		NO CHANGES?	✓
Has there been any new construction?		YES		NO ✓
If yes, were the plans and specifications approved?		YES		NO **NA**
DEQ approval date:	**NA**			

COPIES TO: (✓) DEQ/TRO; (✓) DEQ/OWCP; (✓) OWNER; ( ) OPERATOR; ( ) EPA-Region III; ( ) Other:

PLANT OPERATION AND MAINTENANCE												
1.	Class/number of licensed operators:	I		II	**1**	III		IV		Trainee		**2**
2.	Hours per day plant manned?	**24 hrs/day**										
3.	Describe adequacy of staffing	GOOD		AVERAGE		✓	POOR					
4.	Does the plant have an established program for training personnel	YES	✓	NO								
5.	Describe the adequacy of training	GOOD	✓	AVERAGE		POOR						
6.	Are preventative maintenance tasks scheduled	YES	✓	NO								
7.	Describe the adequacy of maintenance	GOOD	✓	AVERAGE		POOR						
8.	Does the plant experience any organic/hydraulic overloading?	YES		NO	✓							
	If yes, identify cause/impact on plant											
9.	Any bypassing since last inspection?	YES		NO	✓							
10.	Is the standby electrical generator operational?	YES		NO		NA	✓					
11.	How often is the standby generator exercised?	**NA**										
	Power transfer switch?	**NA**	ALARM SYSTEM?	**NA**								
12.	When was the cross connection last tested on the potable supply?	**NA**										
13.	Is the STP alarm system operational?	YES		NO		NA	✓					
14.	Is sludge disposed in accordance with an approved SMP	YES		NO		NA	✓					
15.	Is septage received by the facility?	YES		NO	✓							
	Is septage loading controlled?	YES		NO		NA	✓					
	Are records maintained?	YES		NO		NA	✓					

OVERALL APPEARANCE OF FACILITY	GOOD		AVERAGE	✓	POOR	

COMMENTS:	**# 14 – Sludge is collected with a press and sent to landfill for disposal.** **#10 – A generator is not available on site; though backup systems such as diesel powered and pneumatic pumps are used for emergencies.**

PLANT RECORDS

	WHICH OF THE FOLLOWING RECORDS DOES THE PLANT MAINTAIN?						
	Operational logs for each process unit	YES	✓	NO		NA	
	Instrument maintenance and calibration	YES	✓	NO		NA	
	Mechanical equipment maintenance	YES	✓	NO		NA	
1.	Industrial waste contribution (municipal facilities)	YES		NO		NA	✓

	WHAT DOES THE OPERATIONAL LOG CONTAIN					
	Visual Observations	✓	Flow Measurement	✓	Laboratory Results	✓
2.	Process Adjustments	✓	Control Calculations	✓	Other?	

COMMENTS:

	WHAT DO THE MECHANICAL EQUIPMENT RECORDS CONTAIN?				NA	
	MFG. Instructions	✓	As Built Plans/specs	✓	Spare Parts Inventory	✓
3.	Lube Schedules	✓	Other?		Equipment/parts Suppliers	

COMMENTS:

	WHAT DO INDUSTRIAL WASTE CONTRIBUTION RECORDS CONTAIN? (MUNICIPAL)		NA	✓
	Waste Characteristics		Impact on Plant	
4.	Location and Discharge Types		Other?	

COMMENTS:

	WHICH OF THE FOLLOWING RECORDS ARE AT THE PLANT & AVAILABLE TO PERSONNEL?				NA	
	Equipment Maintenance Records	✓	Industrial Contributor Records			
5.	Operational Log	✓	Sampling/testing Records	✓	Instrumentation Records	✓

6.	Records not normally available to personnel at their location:	**None**				
7.	Were the records reviewed during the inspection	YES	✓	NO		
8.	Are records adequate and the O&M manual current?	YES	✓	NO		
9.	Are the records maintained for the required 3-year time period	YES	✓	NO		

COMMENTS:

SAMPLING								
1.	Are sampling locations capable of providing representative samples?			YES	✓	NO		
2.	Do sample types correspond to VPDES permit requirements?			YES	✓	NO		
3.	Do sampling frequencies correspond to VPDES permit requirements?			YES	✓	NO		
4.	Does plant maintain required records of sampling?			YES	✓	NO		
5.	Are composite samples collected in proportion to flow?	YES	✓	NO		NA		
6.	Are composite samples refrigerated during collection?	YES	✓	NO		NA		
7.	Does the plant run operational control tests?	YES	✓	NO		NA		
COMMENTS:								

TESTING							
1.	Who performs the testing?	Plant	✓	Central Lab		Commercial Lab	✓
	Name: **Universal Labs, Hampton, VA**						
IF THE PLANT PERFORMS ANY TESTING, PLEASE COMPLETE QUESTIONS 2-4							
2.	Which total residual chlorine method is used?	**NA**					
3.	Does plant appear to have sufficient equipment to perform required tests?	YES	✓	NO			
4.	Does testing equipment appear to be clean and/or operable?	YES	✓	NO			
COMMENTS:							

FOR INDUSTRIAL FACILITIES WITH TECHNOLOGY BASED LIMITS ONLY							
1.	Is the production process as described in permit application? If no, describe changes in comments section.	YES		NO		NA	✓
2.	Are products/production rates as described in the permit application? If no list differences in comments section.	YES		NO		NA	✓
3.	Has the Agency been notified of the changes and their impact on plant effluent? Date agency notified:	YES		NO		NA	✓
COMMENTS:							

	PROBLEMS IDENTIFIED AT LAST INSPECTION:	CORRECTED	NOT CORRECTED
	None identified		

SUMMARY

	INSPECTION COMMENTS:
	I arrived on site and met with Sean Maconaghy. The facility has three manufacturing operations on site: Ashland Hercules, Eastman, and Arkema, with the Permit held by Ashland Hercules. The Storm Water Pollution Prevention Plan (SWP3) and associated documents were reviewed with the following noted: 1. The SWP3 was updated in August 2010 and included a certification statement signed on August 2, 2010 by all three corporate entities. 2. A site map includes potential pollution sources and drainage structures and direction. 3. Comprehensive Site Compliance Evaluations (CSCE) are conducted yearly and documented with the 2010 CSCE dated December 22, 2010. 4. Training consists of face-to-face meetings and by e-learning computer based modules. A training program presented in February 2011 included topics on storm water and wastewater management. 5. Facility inspections of each plant area are performed monthly by Ashland Hercules environmental staff and individual plant area personnel (Ashland Hercules, Eastman, and Arkema). 6. Quarterly Visual Examinations of Storm Water Quality are performed and documented as required. Due to the installation of weirs in the outfall ditches (Photos 3&4) some discharges are prevented by the weir. I suggest adding a summary of the precipitation event on the Quarterly Visual form that includes the number of days and hours since the previous qualifying precipitation event. 7. The facility formerly used an Integrated Contingency Plan that is now broken down into separate SWP3, Spill Prevention Control and Countermeasures (SPCC) and Emergency Response Plans (ERP).
	A site survey was conducted with the assistance of Mr. Maconaghy. Overall, the facility appeared to be very clean and well maintained. No trash, housekeeping problems or container issues were observed during the site survey. Part of the facility is being dismantled and a new collection tank for power washing has been installed. Storm water outfalls 006, 003 and 004 (Photos 001, 003 and 004) were observed with no problems noted. Unloading/loading operations were observed at the truck loading station (Photo 002). The ditch that transports non-contact cooling water to Outfall 002 appeared clean with an abundance of aquatic life (Photos 005-006). The discharge from Outfall 201 (Photo 008) appeared clear at the Parshall flume. A filter press is used for the wastewater treatment plant (Photo 007). Outfall 002 discharges to the Nottoway River and appeared clear (Photo 009).

	The remediation of the former lagoon (Photo 10) and sludge pits is completed and the area has been graded and vegetated. Mr. Maconaghy's assistance during the inspection is greatly appreciated.

COMPLIANCE RECOMMENDATIONS FOR ACTION	
	None at this time.

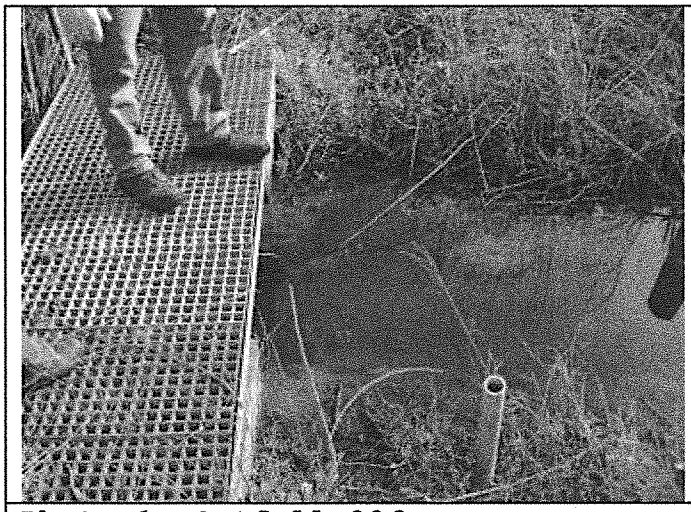

Photo 1. Outfall 006.

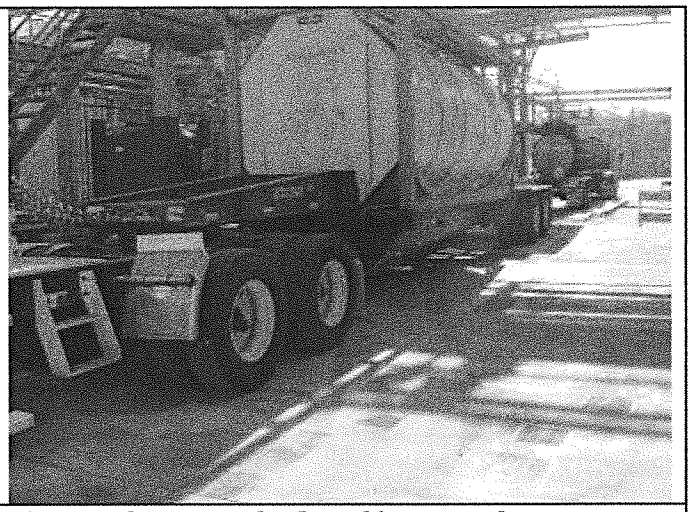

Photo 2. Truck loading pad.

Photo 3. Weir at Outfall 004.

Photo 4. Outfall 003.

Photo 5. Non-contact cooling water discharge.

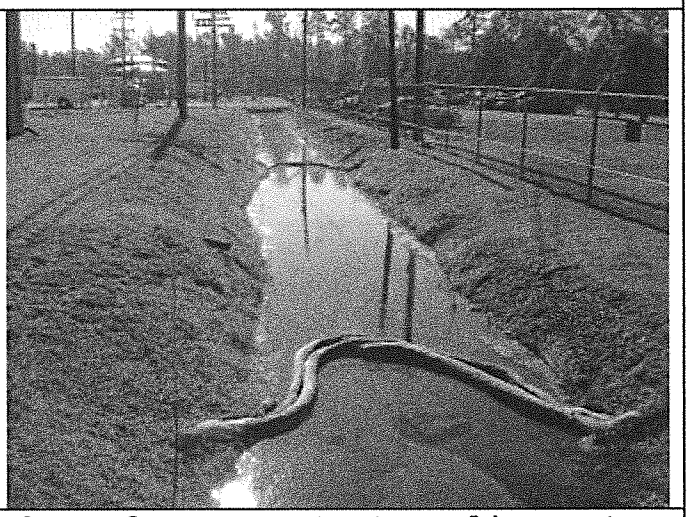

Photo 6. Non-contact cooling water ditch.

Photo 7. Filter press.

Photo 8. Outfall 201 Parshall flume.

Photo 9. Outfall 002.

Photo 10. Former lagoon and sludge pit location.

ATTACHMENT 2

DISCHARGE LOCATION/TOPOGRAPHIC MAP

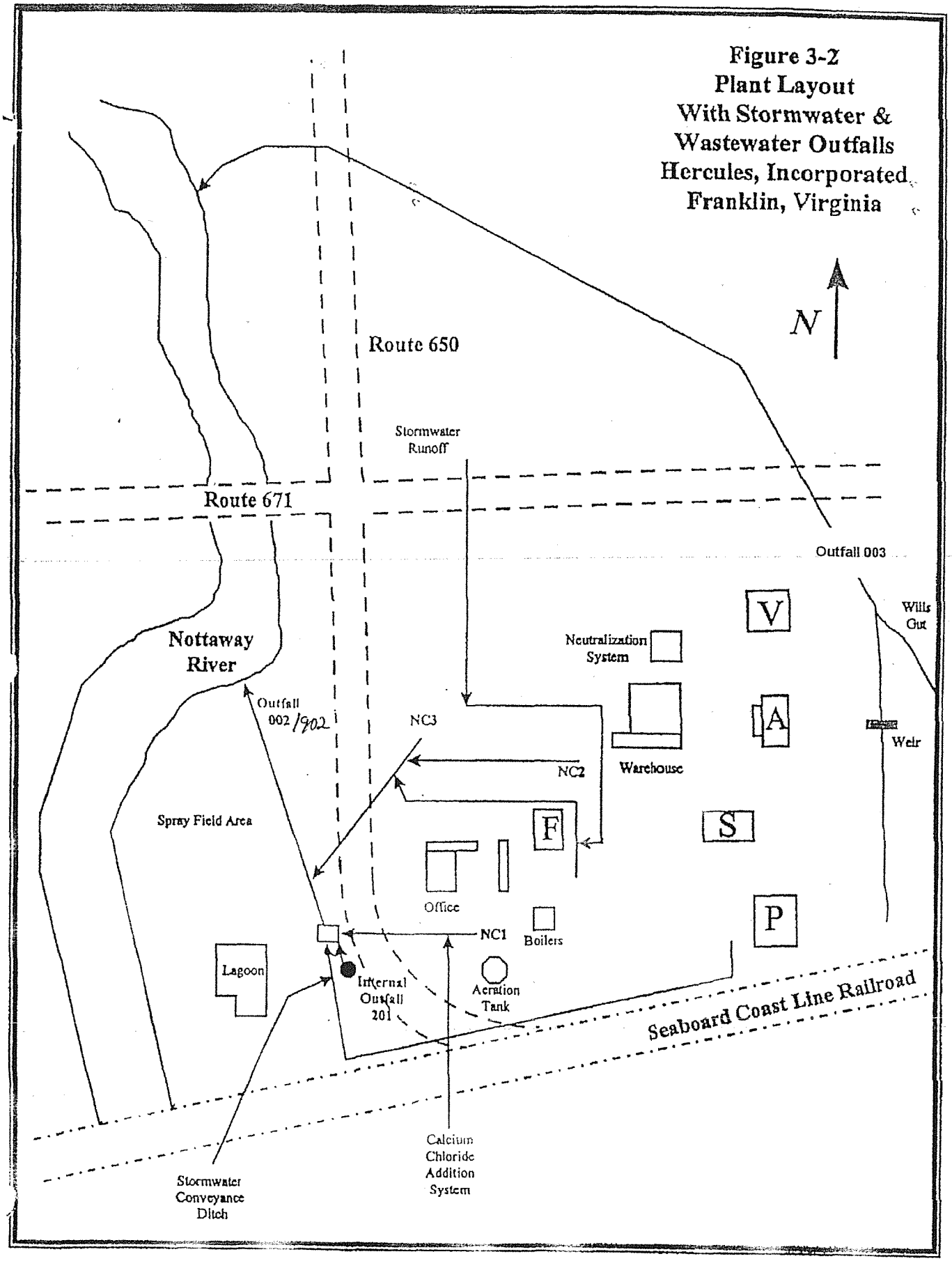

Figure 3-2
Plant Layout
With Stormwater &
Wastewater Outfalls
Hercules, Incorporated
Franklin, Virginia

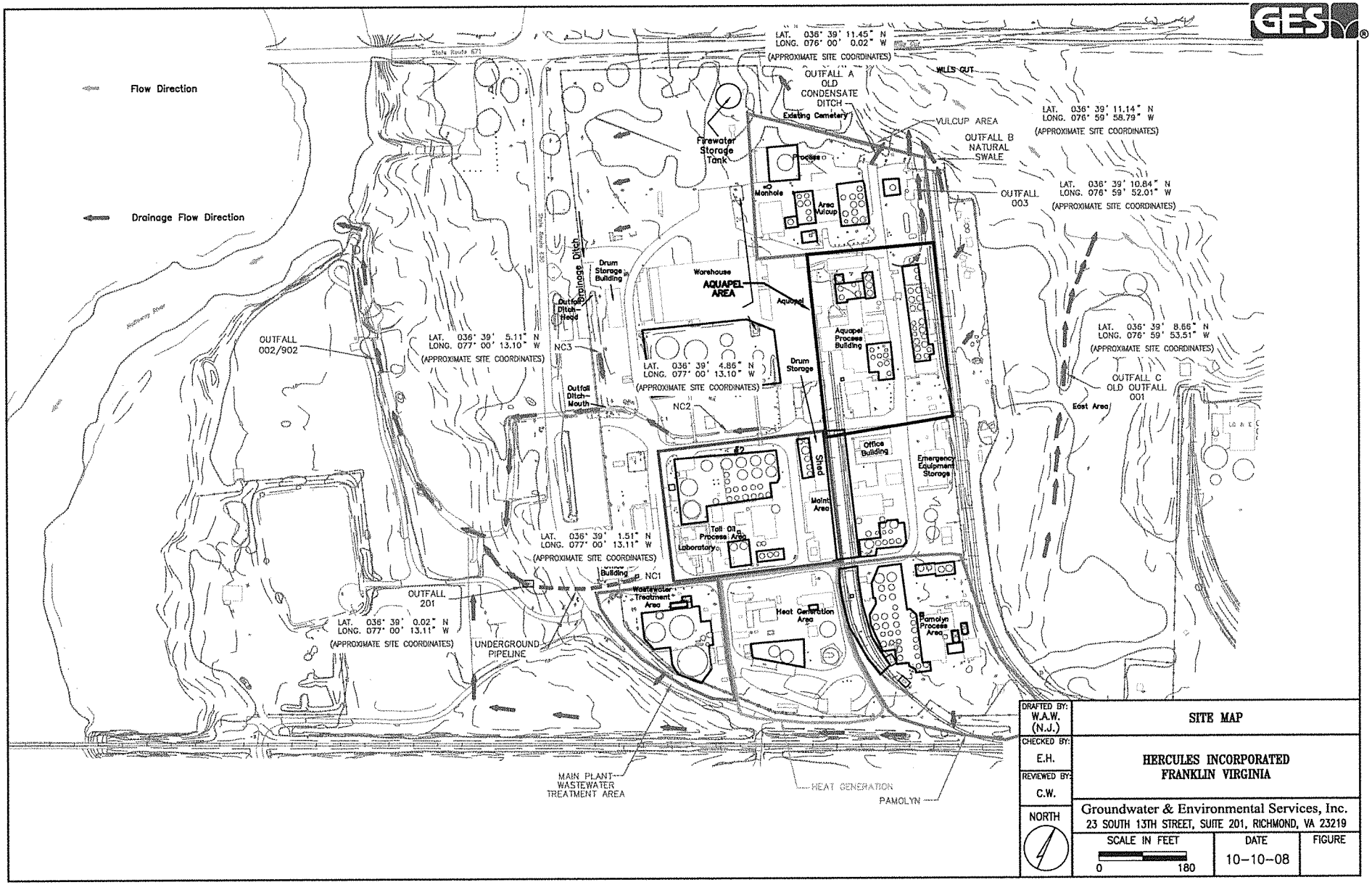

M:\Graphics\1200-Richmond\Hercules\Franklin (ERM figures on CD)\franklin SM.dwg, 10/10/2008 1:47:03 PM, WWesterlund

ATTACHMENT 3

SCHEMATIC/PLANS & SPECS/SITE MAP/ WATER BALANCE

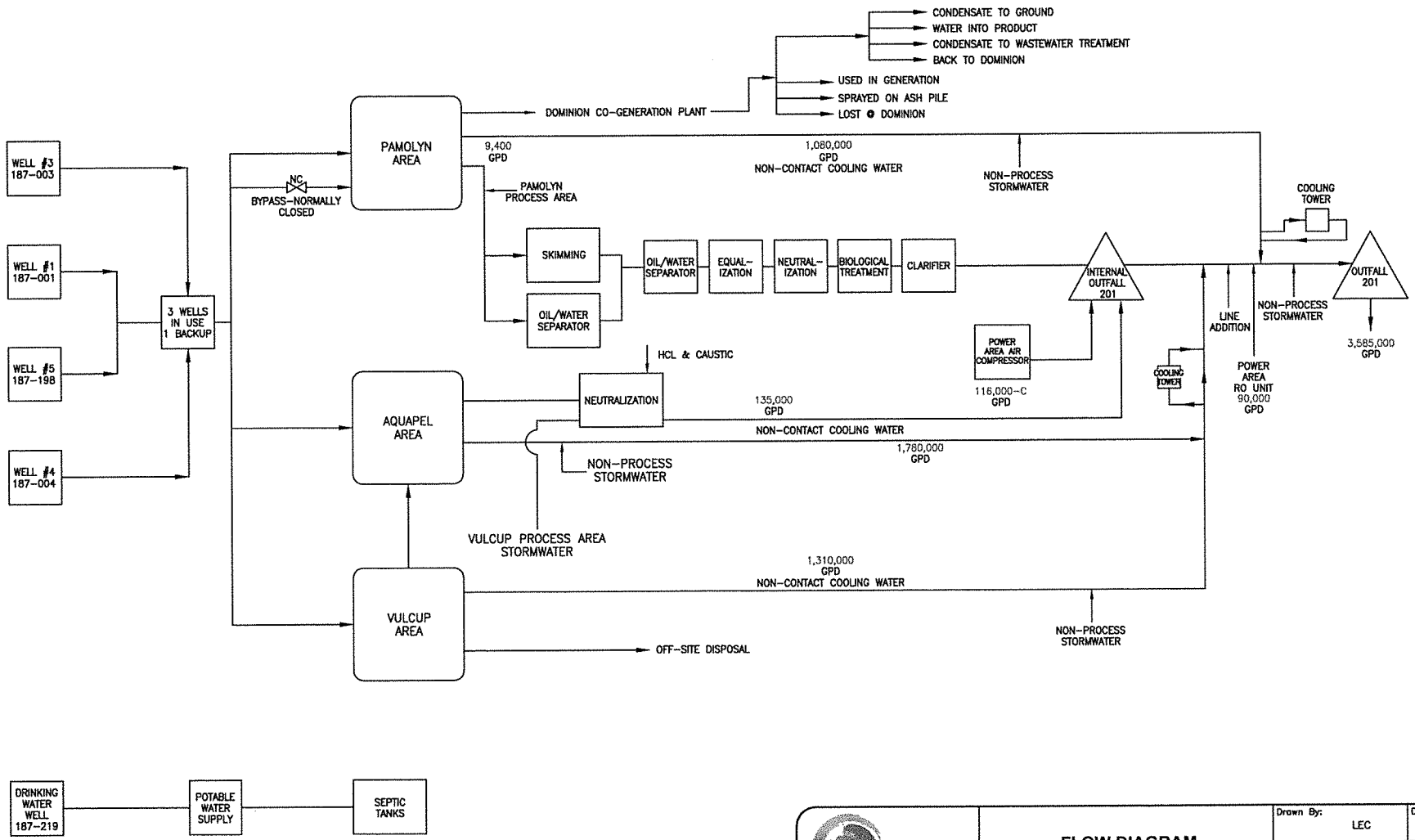

ONE Environmental Group

FLOW DIAGRAM	Drawn By: LEC	Date: 5-1-2012
	Checked By: MR	Revision Date:
HERCULES INCORPORATED FRANKLIN, VIRGINIA	Acad File No.: flow diagram.dwg	Figure No.:
	Project No.:	

ATTACHMENT 4

TABLE I - DISCHARGE/OUTFALL DESCRIPTION

EPA ID NUMBER
VAD0003122165

Form 2C NPDES	EPA	U.S. Environmental Protection Agency Application for Permit to Discharge Wastewater Existing Manufacturing, Commercial, Mining and Silvicultural Operations		
II. Flows, Sources of Pollution, and Treatment Technologies				
Outfalling (list)	Operation(s) Contributing Flow		Treatment	
	Operation	Average Flow		Codes from Table 2C-1
201/002	Aquapel Process SIC Code 2899	135,000 gpd	Wastewater is partially neutralized in a 7,400 gallon basin (retention time 0.9 hr) and pumped to a neutralization system consisting of a 20,000 gal tank for HCl storage and/or pretreatment and a 750 gallon tank & a 3,000 gal tank in series to Outfall 201.	2K 4A
201/002	Pamolyn Process SIC Code 2861 Tank Car Unloading Area SIC Code 2861	8,800 gpd 1,400 gpd	Light oil is skimmed from wastewater in a 60 Mgal basin (r.t. = 6 days), pumped to an oil/water separator where additional oil is removed before flowing to a 624,000 gal Stormwater tank and/or a 250,000 gallon equalization tank. It is neutralized in-line using soda ash, pumped to a 225,000 gal Aeration Tank with integral clarifier (r.t. 5 days), then to a 20,000 gal polishing clarifier and discharged to Outfall 201. Waste sludge is de-watered on a belt filter press for disposal at a landfill. Purge water from groundwater sampling activities. Groundwater from dewatering activities.	1H 2K 3A 1U 4A 5C 5Q
201/002	Power Area SIC Code 2861	116,000 gpd	Non-Contact Cooling Water; not treated. Discharged to 201 then 002.	4A
002	Power Area SIC Code 2861	90,000 gpd	Reverse Osmosis unit reject water discharge.	4A

Attachment 3510-2C-1

Please print or type in the unshaded areas only.

EPA ID Number (*copy from Item 1 of Form 1*)
VAD003122165

Form Approved. OMB No. 2040-0086
Approval expires 5-31-92

FORM 2F NPDES

U.S. Environmental Protection Agency
Washington, DC 20460

Application for Permit to Discharge Storm Water Discharges Associated with Industrial Activity

Paperwork Reduction Act Notice

Public reporting burden for this application is estimated to average 28.6 hours per application, including time for reviewing instructions, searching existing data sources, gathering and maintaining the data needed, and completing and reviewing the collection of information. Send comments regarding the burden estimate, any other aspect of this collection of information, or suggestions for improving this form, including suggestions which may increase or reduce this burden to: Chief, Information Policy Branch, PM-223, U.S. Environmental Protection Agency, 1200 Pennsylvania Avenue, NW, Washington, DC 20460, or Director, Office of Information and Regulatory Affairs, Office of Management and Budget, Washington, DC 20503.

I. Outfall Location

For each outfall, list the latitude and longitude of its location to the nearest 15 seconds and the name of the receiving water.

A. Outfall Number (*list*)	B. Latitude			C. Longitude			D. Receiving Water (*name*)
902	N36	39	76	W77	00	138	Nottoway River
003	N36	39	192	W76	59	947	Wills Gut into Nottoway River
004	N36	39	11	W76	00	0	Wills Gut into Nottoway River
Ditch							
005	N36	39	11	W76	59	59	Wills Gut into Nottoway River
006	N36	39	9	W76	59	53	Wills Gut into Nottoway River

II. Improvements

A. Are you now required by any Federal, State, or local authority to meet any implementation schedule for the construction, upgrading or operation of wastewater treatment equipment or practices or any other environmental programs which may affect the discharges described in this application? This includes, but is not limited to, permit conditions, administrative or enforcement orders, enforcement compliance schedule letters, stipulations, court orders, and grant or loan conditions.

1. Identification of Conditions, Agreements, Etc.	2. Affected Outfalls		3. Brief Description of Project	4. Final Compliance Date	
	number	source of discharge		a. req.	b. proj.
Not Applicable					

B: You may attach additional sheets describing any additional water pollution (or other environmental projects which may affect your discharges) you now have under way or which you plan. Indicate whether each program is now under way or planned, and indicate your actual or planned schedules for construction.

III. Site Drainage Map

Attach a site map showing topography (or indicating the outline of drainage areas served by the outfalls(s) covered in the application if a topographic map is unavailable) depicting the facility including: each of its intake and discharge structures; the drainage area of each storm water outfall; paved areas and buildings within the drainage area of each storm water outfall, each known past or present areas used for outdoor storage of disposal of significant materials, each existing structural control measure to reduce pollutants in storm water runoff, materials loading and access areas, areas where pesticides, herbicides, soil conditioners and fertilizers are applied; each of its hazardous waste treatment, storage or disposal units (including each area not required to have a RCRA permit which is used for accumulating hazardous waste under 40 CFR 262.34); each well where fluids from the facility are injected underground; springs, and other surface water bodies which received storm water discharges from the facility.

 Continue on Page 2

ASHLAND

Ashland Water Technologies

27123 Shady Brook Trail
Courtland, VA 23837
Tel: 757-562-3121
Fax: 757-562-5660

October 29, 2012

CERTIFIED MAIL RETURN RECIEPT REQUESTED
(7008 1830 0002 8562 2004)

Mr. Mark H. Sauer
Water Permits Engineer – Technical Coordinator
Virginia DEQ – Tidewater Regional Office
5636 Southern Boulevard
Virginia Beach, Virginia 23462

Re: Permit No. VA0003433
Permit Renewal Application

Dear Mr. Sauer;

Per your telephone conversation on Friday, October 19, 2012 with our EHS Manager, Sean M. Maconaghy, Ashland Water Technologies would like to request that discharges of steam and condensate from steam traps, blowdown, and leaks in the steam system be incorporated as potential water sources for our permitted outfalls as part of our VPDES permit renewal. The original information was no not included in our initial permit renewal application which was submitted on May 31, 2012 due to an oversight. The volume of water from the steam and condensate is considered insignificant based on the total volume of water being discharged from the facility. Please accept this as a formal request as the authorized company representative to incorporate steam and condensate sources as part of our discharge.

For legal purposes please note that Hercules Incorporated, is corporation organized under laws of the State of Delaware, conducting business as Ashland Water Technologies, a subsidiary of Ashland Inc. If you should have any questions pertaining to this request or require additional information please feel free to contact our site EHS Manager via telephone at 757-569-2976 or via e-Mail at smmaconaghy@ashland.com.

Sincerely,

Andrew B. Chapman
Plant Manager
AWT - Franklin

ATTACHMENT 5

TABLE II - EFFLUENT MONITORING/LIMITATIONS

TABLE II - INDUSTRIAL EFFLUENT LIMITATIONS/MONITORING

OUTFALL # 002
Outfall Description: combined process and non contact cooling water, reverse osmosis system water, steam condensate
SIC CODE: 2861, 2869, 2899

(x) Final Limits ( ) Interim Limits Effective Dates - From: Issuance To: Expiration

PARAMETER & UNITS	BASIS FOR LIMITS	MULTIPLIER OR PRODUCTION	EFFLUENT LIMITATIONS			MONITORING REQUIREMENTS [a]	
			MONTHLY AVERAGE	MINIMUM	MAXIMUM	FREQUENCY	SAMPLE TYPE
Flow (MGD)	3		NL	NA	NL	continuous	Measured
pH (S.U.)	2		NA	6.0	9.0	1/Week	Grab
Temperature (^{0}C)	3		NL	NA	32	1/Week	I.S.
T. Phosphorus (mg/l)	3		2.0	NA	NA	1/Week	24 HC
T. Phosphorus (lb/d)	3		97	NA	NA	1/Week	24 HC
T. Nitrogen (mg/l)	3		NL	NA	NA	1/Month	24 HC
T. Nitrogen (lb/d)	3		NL	NA	NA	1/Month	24 HC
Effluent Hardness (mg/l)	3		NL	NA	NA	1/Month	24 HC
BOD5 (mg/l) [b]	3		NL	NA	NL	1/Month	24 HC
Total Recoverable Copper (ug/l) [c]	2		NL	NA	52	1/Month	24 HC
Hexavalent Chromium (ug/l)	2		NL	NA	16	1/3 Months	Grab

TABLE II - INDUSTRIAL EFFLUENT LIMITATIONS/MONITORING (continued)

OUTFALL # 002
Outfall Description: combined process and non contact cooling water, reverse osmosis system water, steam condensate
SIC CODE: 2861, 2869, 2899

(x) Final Limits ( ) Interim Limits Effective Dates - From: Issuance To: Expiration

PARAMETER & UNITS	BASIS FOR LIMITS	MULTIPLIER OR PRODUCTION	EFFLUENT LIMITATIONS			MONITORING REQUIREMENTS [a]	
			MONTHLY AVERAGE	MINIMUM	MAXIMUM	FREQUENCY	SAMPLE TYPE
Dissolved Oxygen (mg/l)	2		NA	4.0	NA	1/Month	Grab
Acute WET (TU_a) [d]	2		NA	NA	1.0	1/3 Months	24 HC
Chronic WET (Tu_c) [d]	2		NA	NA	6.25	1/3 Months	24 HC

NA = NOT APPLICABLE; NL = NO LIMIT, MONITORING REQUIREMENT ONLY

I.S. = Immersion Stabilization

1/3 Months = In accordance with the following schedule: 1st quarter (January 1 - March 31); 2nd quarter (April 1 - June 30); 3rd quarter (July 1 - September 30); 4th quarter (October 1 - December 31).

[a] Sample shall be taken at Parshall flume for all parameters listed above, except temperature. Temperature shall be measured at a point eleven (11) feet downstream of the Parshall flume.

[b] See Parts I.C.7. and I.C.8. for quantification levels and reporting requirements, respectively.

[c] See Part I.C.10.

[d] See Part I.B.

The bases for the limitations codes are:
1. Technology (e.g., Federal Effluent Guidelines)
2. Water Quality Standards (9 VAC 25-260 et. seq.)
3. Best Professional Judgment

TABLE II - INDUSTRIAL EFFLUENT LIMITATIONS/MONITORING

OUTFALL #: 201
Outfall Description: combined treated waste basin
SIC CODE: 2861, 2869, 2899

(X) Final Limits ( ) Interim Limits Effective Dates - From: Issuance To: Expiration

PARAMETER & UNITS	BASIS FOR LIMITS	MULTIPLIER OR PRODUCTION	EFFLUENT LIMITATIONS			MONITORING REQUIREMENTS [a]	
			MONTHLY AVERAGE	MINIMUM	MAXIMUM	FREQUENCY	SAMPLE TYPE
Flow (MGD)	3		NL	NA	NL	Continuous	Measured
BOD5 (mg/l)	1		184	NA	348	1/Week	24 HC
BOD5 (lb/day)	1		207.22	NA	391.25	1/Week	24 HC
Total Suspended Solids (mg/l)	1		81	NA	235	1/Week	24 HC
Total Suspended Solids (lb/day)	1		91.10	NA	264.56	1/Week	24 HC

NA = NOT APPLICABLE; NL = NO LIMIT, MONITORING REQUIREMENT ONLY

[a] Outfall 201 shall be sampled from the combined waste basin (small weir) prior to mixing with other non-process flow.

The bases for the limitations codes are:
1. Technology (e.g., Federal Effluent Guidelines)
2. Water Quality Standards (9 VAC 25-260 et. seq.)
3. Best Professional Judgment

TABLE II - INDUSTRIAL EFFLUENT LIMITATIONS/MONITORING

OUTFALL #: 902
Outfall Description: wet weather discharge at outfall 002
SIC CODE: 2861, 2869, 2899

Note - This outfall represents wet weather monitoring for outfall 002 to incorporate storm water in the effluent sampling event

(X) Final Limits ( ) Interim Limits Effective Dates - From: Issuance To: Expiration

PARAMETER & UNITS	BASIS FOR LIMITS	MULTIPLIER OR PRODUCTION	EFFLUENT LIMITATIONS			MONITORING REQUIREMENTS [a]	
			MONTHLY AVERAGE	MINIMUM	MAXIMUM	FREQUENCY	SAMPLE TYPE
Flow (MG)	3		NA	NA	NL	1/Year	Estimate [b]
pH (s.u.)	3		NA	6.0	9.0	1/Year	Grab
BOD5 (mg/l) [c]	3		NA	NA	NL	1/Year	Grab
Total Suspended Solids (mg/l) [c]	3		NA	NA	NL	1/Year	Grab
Total Petroleum Hydrocarbons (mg/l) [c]	3		NA	NA	NL	1/Year	Grab
Chemical Oxygen Demand (mg/l) [c]	3		NA	NA	NL	1/Year	Grab

NA = NOT APPLICABLE; NL = NO LIMIT, MONITORING REQUIREMENT ONLY

1/Year = January 1 - December 31.

[a] See Part I.D. for additional storm water sampling and reporting requirements.
[b] Estimate of the total volume of the discharge during the storm event.
[c] See Parts I.C.7. and I.C.8. for quantification levels and reporting requirements, respectively.

The bases for the limitations codes are:
3. Best Professional Judgment

TABLE II - INDUSTRIAL EFFLUENT LIMITATIONS/MONITORING

OUTFALL #: 003, 004, 005, 006 (004-old condensate ditch; 005-natural swale; 006-old outfall 001)
Outfall Description: Storm water runoff from regulated industrial areas, steam condensate
SIC CODE: 2861, 2869, 2899

(X) Final Limits ( ) Interim Limits Effective Dates - From: Issuance To: Expiration

PARAMETER & UNITS	BASIS FOR LIMITS	MULTIPLIER OR PRODUCTION	EFFLUENT LIMITATIONS			MONITORING REQUIREMENTS [a]	
			MONTHLY AVERAGE	MINIMUM	MAXIMUM	FREQUENCY	SAMPLE TYPE
Flow (MG)	3		NA	NA	NL	1/Year	Estimate [b]
pH (s.u.)	3		NA	NL	NL	1/Year	Grab
Total Suspended Solids (mg/l) [c]	3		NA	NA	NL	1/Year	Grab
TPH (mg/l) [c]	3		NA	NA	NL	1/Year	Grab
Chemical Oxygen Demand (mg/l) [c]	3		NA	NA	NL	1/Year	Grab

NA = NOT APPLICABLE; NL = NO LIMIT, MONITORING REQUIREMENT ONLY

1/Year = January 1 - December 31.

[a] See Part I.D. for additional storm water sampling and reporting requirements.
[b] Estimate of the total volume of the discharge during the storm event.
[c] See Parts I.C.7. and I.C.8. for quantification levels and reporting requirements, respectively.

The bases for the limitations codes are:
1. Technology (e.g., Federal Effluent Guidelines)
2. Water Quality Standards (9 VAC 25-260 et. seq.)
3. Best Professional Judgment

ATTACHMENT 6

EFFLUENT LIMITATIONS/MONITORING RATIONALE/SUITABLE DATA/ ANTIDEGRADATION/ANTIBACKSLIDING

Outfall 002

This outfall is the combined external outfall for process wastewater from internal outfall 201, internal outfall 202, storm water, non-contact cooling water, reverse osmosis system reject water and steam condensate. A minimum dissolved oxygen limit has been added in a previous permit modification due to the addition of reverse osmosis system discharge to the outfall.

Flow: No limit, sampling type is measured. Sampling frequency is continuous and reporting is monthly, based on the flow and type of operations at the facility. This is a typical requirement for the VPDES industrial permit. The facility uses a flow meter in the discharge canal to measure flow.

pH: Grab sample. Monitoring frequency is once per week, based on flow. Permit limits of 6.0 S.U. minimum, 9.0 S.U. maximum are based on BPJ to protect water quality.

Temperature: Immersion stabilization. Sampling frequency is once per week. Maximum limitation is 32°C. State Water Quality Standards at Regulations 9 VAC 25-260-60 through 9 VAC 25-260-90 address temperature requirements in State waters. In order to comply with these standards, a maximum temperature limit of 30°C for the discharge at outfall 002 was initially been established based on the presence of non-contact cooling water in the discharge. The flow of non contact cooling water is over 90% of the 5 MGD flow from outfall 002 to the receiving stream. A 1 day/10 year low flow in the receiving stream is 18 MGD. The discharge from this plant could make up nearly 30% of the instream flow. Due to the significant contribution of the discharge to the stream and the significant amount of cooling water in the discharge, the maximum temperature limit of 30°C was believed necessary to be protective of aquatic life in the receiving stream. This requirement was based on BPJ to protect water quality and comply with the water quality standards. A subsequent thermal mixing zone study conducted by the permittee and submitted demonstrates that a temperature limit of 32 degrees C will not affect the instream temperature and will not cause or contribute to an exceedance of the water quality standards for temperature. A copy of the study is provided later in this section.

Total Phosphorus: 24 hr. composite sampling at a frequency of once per week. Monthly average limitations 2.0 mg/1 and 97 lb/d are based on 9 VAC 25-40-30, Strategy for Nutrient Enriched Waters Outside of the Chesapeake Bay Watershed.

Total Nitrogen: 24 hr. composite sampling at a frequency of once per month. Monthly average reporting for concentration (mg/l) and mass (lb/d). This will be monitoring only with no limits. This monitoring strategy is based on BPJ using the State's past Policy for Nutrient Enriched Waters and VPDES Permit Manual. The frequency has been reduced from 1/week to 1/month based on BPJ, including a review of previous data, which shows little data variability. A frequency of 1/month is sufficient to obtain any

data needed to evaluate the nutrient load into the receiving stream.

BOD5: 24 hr. composite sampling at a frequency of once per month. Monthly average and daily maximum reporting applies; monitoring only with no limits. This requirement is based on BPJ. This parameter is limited at the internal outfall per Federal Effluent Guidelines.

Chromium VI: Sampling method is grab because this metal is reported in dissolved form. Sampling frequency is quarterly. Daily maximum limit of 16 ug/1. is based on water quality. Previous chemical data indicated the presence of this metal in the effluent with concentration exceeding that of water quality standards. Based on Agency guidance for data reporting using two significant figures, the limit is now expressed in two significant figures instead of four significant figures in the previous permit.

Total Recoverable Copper: 24 hr. composite sampling at a frequency of 1/month. The calculated daily maximum limit is 9.8 ug/l., based on previous data indicating that numerical limitations are necessary to protect water quality standards. A metals translator study was done for this parameter and has been approved by DEQ. For compliance purposes, the new copper limit is calculated by dividing the existing copper limit by the site specific translator study.

Calculated copper limit From the Water Quality Standards:	9.8 ug/l
Site specific metals translator value:	0.19
Revised copper limit:	51.6 ug/l = 52 ug/l

The revised limit will appear on the Part I.A. limits page in order to facilitate reporting and compliance tracking; and will be included on the DMR. A special condition will further address the translator factor. Any changes to the translator factor will change the revised copper limit. Based on Agency guidance for reporting to two significant figures, the revised copper limit will be expressed as 52 ug/l.

Effluent Hardness: 24 hr. composite sample at a frequency of once per month. Monthly average reporting only. Previous effluent hardness data, TRE data, and toxicity data indicate that an effluent hardness value of 60 mg/l, supported by TRE work, is sufficient to protect against acute toxicity. As a result, it was recommended that a minimum hardness limitation of 60 mg/l $CaCO_3$ be established for this discharge. However, this

number is not included in the permit as a limit, the requirement is for reporting only. This is based on BPJ. In order to protect against acute toxicity, an acute WET limit is included in the permit, negating the need for any harness limit.

Dissolved Oxygen: This parameter was added during the 2010 permit modification. The permittee has added a reverse osmosis (RO) water treatment system at the facility to treat water the permittee will use in process and sell to an outside customer. The reject water from the system and occasional backflush from the system will discharge to the drainage ditch leading to outfall 002. No regeneration water will be discharged; regeneration of the units will take place off site by the contract provider. Based on water quality standards at 9 VAC 25-260-50, numerical criteria for dissolved oxygen et al, dissolved oxygen in the Chowan Basin must be maintained at a minimum of 4.0 mg/l. Based on regulation 9 VAC 25-860-10 et seq, the regulation for potable water treatment plants, RO systems have the potential to affect dissolved oxygen. The regulation requires a minimum dissolved oxygen limitation of 4.0 mg/l for discharges from RO units. This is the same requirement the DEQ included in VPDES permits by BPJ prior to the implementation of this regulation and general permit. The fact sheet for the general permit regulation indicates that meeting the dissolved oxygen requirement demonstrates that system is operating correctly and is in good repair. This would indicate that the minimum dissolved oxygen requirement could be placed on the discharge from the system prior to mixing with other flows in the ditch to outfall 002. However the system at this facility will discharge at a rate of approximately 65,000 gallons per day which is a small percentage of the flow in the ditch to outfall 002, and is a relatively minor contribution to the discharge to the receiving stream; therefore, the discharge of this system alone has little potential to greatly affect the D.O. content in the drainage ditch or in the receiving stream. But, the combination of all process and non-process flows to the receiving stream from the combined outfall 002 do have the potential to affect dissolved oxygen in the receiving stream. And, since the D.O. minimum limit is based on water quality, it is more appropriate to apply this limit at the external outfall. Therefore, the D.O. minimum limitation of 4.0 mg/l will be placed on the external outfall to protect water quality and aquatic organisms in the receiving stream.

Whole Effluent Toxicity: See attachment 8.

Outfall 201

This internal outfall is the process wastewater treatment system and the location at which the federal effluent guideline limits from 40 CFR 454 apply. The facility has undergone significant changes in processing operations, affecting both the application and calculation of federal effluent guideline limitations. BOD and TSS limitations have been recalculated based on these changes.

Flow: Monthly average and daily maximum flow measurement is reported monthly from continuous flow monitoring at the internal outfall, prior to the discharge mixing with other flow to outfall 002. This is based on BPJ for this type of process operation at the facility. This is a typical requirement for a VPDES industrial permit.

BOD5: 24 hr. composite sampling at a frequency is once per week is based on flow. Technology-based limits of 184 mg/l and 207.22 lbs/day monthly average, and 348 mg/l and 391.25 lbs/day daily maximum are based on Federal Effluent Guidelines, 40 CFR Part 454, subparts D and C. See effluent limits calculations for derivation of numerical limitations. Operations and flow have changed significantly at the plant and these limits are based on a recalculation of limits from subpart D. The Aquapel process was reviewed and it was determined that the process is actually better represented in subpart C rather than subpart F. The reason for the change is presented later in this section.

Total Suspended Solids: 24 hr. composite sampling at a frequency is once per week is based on flow. Technology-based limits of 81 mg/l and 91.10 lbs/day monthly average, and 235 mg/l and 264.56 lbs/day daily maximum are based on Federal Effluent Guidelines, 40 CFR Part 454, subparts D and C. See effluent limits calculations for derivation of numerical limitations. Operations and flow have changed significantly at the plant and these limits are based on a recalculation of limits from subpart D. The Aquapel process was reviewed and it was determined that the process is actually better represented in subpart C rather than subpart F. The reason for the change is presented later in this section.

Technology Based Limits based on deletion of Tall Oil Production and Reclassification of the Aquapel Process

The industrial processes at the Franklin facility used to include refining crude tall oil into rosin acid and fatty acid products, upgrading of the fatty acids and manufacturing of paper sizing agents and organic peroxide. These processes are subject to Federal Regulations 40 CFR Part 454 - Gum and Wood Chemicals Manufacturing Point Source Category.

In 2008 the facility stopped producing tall oil products, changing the effluent limitations under 40 CFR 454. At the time of a previous modification of the permit, the permittee also requested that the DEQ review the subparts under 40 CFR Part 454 to determine if the current classification is appropriate.

Based on these two changes to the way the federal effluent guidelines under 40 CFR 454 are applied, the effluent limitations for BOD and TSS at outfall 201 changed during a previous permit modification. All flows from tall oil production were removed from the equation calculating effluent limitations based on production. The production from Pamolyn Crystallization will now be the only production used to calculate limits under Subpart D - Tall Oil Rosin, Pitch and Fatty Acids Subcategory. The Subcategory for the Aquapel process were changed from Subpart F (Rosin-Based Derivatives) to Subpart C - Wood Rosin, Turpentine and Pine Oil Subcategory. The basis for this presented in a letter from the permittee's consultant to DEQ dated April 20, 2009. This letter included excerpts from the Development Document for the Effluent Guidelines for the Gum and Wood Chemicals Point Source Category.

Limit calculations for BOD and TSS at outfall 201 are presented in the following pages.

Technology Based Limits based on deletion of Tall Oil Production and Reclassification of the Aquapel Process

Based on the deletion of the Tall Oil process and the re-classification of the Aquapel process, the following limits are applicable at outfall 201 for BOD and TSS.

I. Processes and production:

Process	SIC Code	Production	EPA Guideline
Pamolyn Crystallization:	2861	111,000 lb/d	40 CFR 454 Subpart D
Aquapel Process	2899	135,000 lb/d	40 CFR 454 Subpart C

II. Effluent Characteristics and Applicable Effluent Guideline Limitations

A. Subpart D – Tall Oil Rosin, Pitch and Fatty Acids

Effluent Characteristic	Effluent Limitations	
	Daily Max	Average
BOD5 (1b/1,000 lb of product)	0.995	0.529
TSS (lb/1,000 lb of product)	0.705	0.243

A. Subpart C – Wood Rosin, Turpentine and Pine Oil Process

Effluent Characteristic	Effluent Limitations	
	Daily Max	Average
BOD5 (1b/1,000 lb of product)	2.08	1.10
TSS (lb/1,000 lb of product)	1.38	0.475

Ashland – Hercules Franklin VA0003433

Technology Based Limits based on deletion of Tall Oil Production and Reclassification of the Aquapel Process

III. Mass Limit Derivation

A. Subpart D Pamolyn Crystallization: 111,000 lb/d

BOD (max)	0.995 lb/1,000 lb of product	x	111,000 lb/d	=	110.45 lb/day
BOD (avg)	0.529 lb/1,000 lb of product	x	111,000 lb/d	=	58.72 lb/day
TSS (max)	0.705 lb/1,000 lb of product	x	111,000 lb/d	=	78.26 lb/day
TSS (avg)	0.243 lb/1,000 lb of product	x	111,000 lb/d	=	26.97 lb/day

B. Subpart C Aquapel Process: 135,000 lb/d

BOD (max)	2.08 lb/1,000 lb of product	x	135,000 lb/d	=	280.8 lb/day
BOD (avg)	1.10 lb/1,000 lb of product	x	135,000 lb/d	=	148.5 lb/day
TSS (max)	1.38 lb/1,000 lb of product	x	135,000 lb/d	=	186.3 lb/day
TSS (avg)	0.475 lb/1,000 lb of product	x	135,000 lb/d	=	64.13 lb/day

C. Total:

BOD (max)	110.45	+	280.8	=	391.25 lb/d
BOD (avg)	58.72	+	148.8	=	207.22 lb/d
TSS (max)	78.26	+	186.3	=	264.56 lb/d
TSS (avg)	26.97	+	64.13	=	91.10 lb/d

Ashland – Hercules Franklin VA0003433

Technology Based Limits based on deletion of Tall Oil Production and Reclassification of the Aquapel Process

IV. Coverting the Mass Limitations (lb/day) to Concentration Limitations (mg/l).

A flow value of 135,000 gpd was used in the conversion process; it is the average flow of outfall 201.

The following equation was used for the conversions: lb/d / .135 / 8.34 = mg/l

BOD (max)	347.5	=	348 mg/l
BOD (avg)	184.04	=	184 mg/l
TSS (max)	234.98	=	235 mg/l
TSS (avg)	80.91	=	81 mg/l

Outfall 902

Flow: Estimate of total flow in Million Gallons (MG) is monitored and reported once per year. This is a standard frequency and sampling type for storm water discharges in VPDES industrial permits.

pH: Grab sample at a monitoring frequency of once per year is based on BPJ for storm water outfalls at industrial facilities. Effluent limits of 6.0 s.u. minimum and 9.0 s.u. maximum are imposed on this outfall based on BPJ to protect water quality in the receiving stream. These limits are the same as the pH limits for outfall 002, of which this storm water discharge is a component.

BOD5: Grab sample at a monitoring frequency of once per year is based on BPJ for storm water outfalls at industrial facilities. Maximum reporting only with no limit. This requirement is based on BPJ for this organic chemical manufacturing facility.

Total Petroleum Hydrocarbons: Grab sample at a monitoring frequency of once per year is based on BPJ for storm water outfalls at industrial facilities. Maximum reporting only with no limits. This parameter is a good indicator in determining the effectiveness of BMPs at the facility. This is based on BPJ and is a standard indicator parameter at industrial facilities.

Chemical Oxygen Demand: Grab sample at a monitoring frequency of once per year is based on BPJ for storm water outfalls at industrial facilities. Maximum reporting only with no limits. This parameter is a good indicator in determining the effectiveness of BMPs at this organic chemical industrial facility. This is based on BPJ.

Total Suspended Solids: Grab sample at a monitoring frequency of once per year is based on BPJ for storm water outfalls at industrial facilities. Maximum reporting only with no limits. This parameter is a good indicator in determining the effectiveness of BMPs at the facility. This is based on BPJ and is a standard indicator parameter at industrial facilities.

Based on the General Permit Regulation for Storm Water Associated with Industrial Activity, specifically Sector C, Chemical and Allied Products Manufacturing, 9 VAC 25-151-110, there are no effluent limitations or benchmark monitoring requirements for storm water at facilities in the SIC codes 2861-2869 or 2899. There are specific special conditions associated with this Sector category, which will be addressed under the Special Conditions section in the permit and fact sheet.

Outfalls 003, 004, 005, 006

Flow: Estimate of total flow in Million Gallons (MG) is monitored and reported once per year. This is a standard frequency and sampling type for storm water discharges in VPDES industrial permits.

pH: Grab sample at a monitoring frequency of once per year is based on BPJ for storm water outfalls at industrial facilities. Minimum and maximum reporting only with no limits. This parameter is a good indicator in determining the effectiveness of BMPs at the facility. This is based on BPJ and is a standard indicator parameter at industrial facilities.

Total Petroleum Hydrocarbons: Grab sample at a monitoring frequency of once per year is based on BPJ for storm water outfalls at industrial facilities. Maximum reporting only with no limits. This parameter is a good indicator in determining the effectiveness of BMPs at the facility. This is based on BPJ and is a standard indicator parameter at industrial facilities.

Chemical Oxygen Demand: Grab sample at a monitoring frequency of once per year is based on BPJ for storm water outfalls at industrial facilities. Maximum reporting only with no limits. This parameter is a good indicator in determining the effectiveness of BMPs at this organic chemical industrial facility. This is based on BPJ.

Total Suspended Solids: Grab sample at a monitoring frequency of once per year is based on BPJ for storm water outfalls at industrial facilities. Maximum reporting only with no limits. This parameter is a good indicator in determining the effectiveness of BMPs at the facility. This is based on BPJ and is a standard indicator parameter at industrial facilities.

Based on the General Permit Regulation for Storm Water Associated with Industrial Activity, specifically Sector C, Chemical and Allied Products Manufacturing, 9 VAC 25-151-110, there are no effluent limitations or benchmark monitoring requirements for storm water at facilities in the SIC codes 2861-2869 or 2899. There are specific special conditions associated with this Sector category, which will be addressed under the Special Conditions section in the permit and fact sheet.

Guidance Memo 96-001 recommends that chemical water quality-based limits not be placed on storm water outfalls at this time because the methodology for developing limits and the proper method of sampling is still a concern and under review by EPA. Therefore, in the interim, screening criteria have been established at 2 times the acute criteria. These criteria are applied solely to identify those pollutants that should be given special emphasis during development of the Storm Water Pollution Prevention Plan (SWPPP). Any storm water outfall data (pollutant specific) submitted by the permittee which were above the established screening criteria levels requires monitoring in Part I.A.

of the permit for that specific outfall and pollutant. For this facility, no data were above the established screening criteria, so no parameters are specifically included in the storm water management evaluation section of the SWPPP.

The SWPPP required in this permit is designed to reduce pollutants in storm water runoff. The goal of the SWPPP is to reduce pollutants to the maximum extent practicable. An annual report is to be submitted to the Regional office and shall include the data collected the previous year with an indication if the SWPPP or any BMPs were modified based on the monitoring results.

Water Quality Standards and Wasteload Allocations

Permittee:	Hercules, Inc.	Flows (MGD):	Design	2		90th % stream pH	7.18	MIX% for chronic WLA	100
Permit No.	VA0003433		7Q10	19.38	(chronic)	10th % stream pH	6.2	MIX% for acute WLA	11
Receiving Stream:	Nottoway River		1Q10	18.09	(acute)	90th % stream temp	26		
WQ Tier	2	(1 or 2)	30Q5	42	(human health - noncarcinogen)	mean effluent hardness			
Public Water Supply?	2	(1 = yes, 2 = no)	HM		(human health - carcinogen)	mean stream hardness	33.3	(note: 25 mg/l minimum)	

Parameter	Background	Water Quality Standard				Wasteload Allocations				Antidegradation Baseline				Antidegradation Allocations				Most Limiting Allocations			
(ug/l unless noted)	Conc.	Acute	Chronic	HH (PWS)	HH	Acute	Chronic	HH (PWS)	HH	Acute	Chronic	HH (PWS)	HH	Acute	Chronic	HH (PWS)	HH	Acute	Chronic	HH (PWS)	HH
Acenapthene	0			1.2E+03	2.7E+03			na	5.9E+04			1.2E+02	2.7E+02			na	5.9E+03			na	5.9E+03
Aldrin [c]	0	3.0E+00	3.0E-01	1.3E-03	1.4E-03	6.0E+00	3.2E+00	na	1.4E-03	7.5E-01	7.5E-02	1.3E-04	1.4E-04	7.5E+00	8.0E-01	na	1.4E-04	6.0E+00	8.0E-01	na	1.4E-04
Ammonia-N (mg/l)	0.032	1.7E+01	2.0E+00			3.3E+01	2.1E+01			4.2E+00	5.3E-01			4.2E+01	5.4E+00			3.3E+01	5.4E+00		
Anthracene	0			9.6E+03	1.1E+05			na	2.4E+06			9.6E+02	1.1E+04			na	2.4E+05			na	2.4E+[illegible]
Antimony	0			1.4E+01	4.3E+03			na	9.5E+04			1.4E+00	4.3E+02			na	9.5E+03			na	
Arsenic	0			5.0E+01				na				5.0E+00				na				na	
Arsenic III	0	3.6E+02	1.9E+02			7.2E+02	2.0E+03			9.0E+01	4.8E+01			9.0E+02	5.1E+02			7.2E+02	5.1E+02		
Barium	0			2.0E+03				na				2.0E+02				na				na	
Benzene [c]	0			1.2E+01	7.1E+02			na	7.1E+02			1.2E+00	7.1E+01			na	7.1E+01			na	7.1E+01
Benzo(a)anthracene [c]	0			4.4E-02	4.9E-01			na	1.1E+01			4.4E-03	4.9E-02			na	4.9E-02			na	4.9E-02
Benzo(b)fluoranthene [c]	0			4.4E-02	4.9E-01			na	1.1E+01			4.4E-03	4.9E-02			na	4.9E-02			na	4.9E-02
Benzo(k)fluoranthene [c]	0			4.4E-02	4.9E-01			na	1.1E+01			4.4E-03	4.9E-02			na	4.9E-02			na	4.9E-02
Benzo(a)pyrene [c]	0			4.4E-02	4.9E-01			na	4.9E-01			4.4E-03	4.9E-02			na	4.9E-02			na	4.9E-02
Bromoform [c]	0			4.4E+01	3.6E+03			na	3.6E+03			4.4E+00	3.6E+02			na	3.6E+02			na	3.6E+02
Butylbenzylphthalate	0			3.0E+03	5.2E+03			na	1.1E+05			3.0E+02	5.2E+02			na	1.1E+04				1.1E+04
Cadmium	0	5.2E-01	4.4E-01			1.0E+00	4.7E+00			2.5E-01	1.1E-01			2.5E+00	1.2E+00			1.0E+00	1.2E+00		
Carbon Tetrachloride [c]	0			2.5E+00	4.5E+01			na	4.5E+01			2.5E-01	4.5E+00			na	4.5E+00			na	4.5E+00
Chlordane [c]	0	2.4E+00	4.3E-03	5.8E-03	5.9E-03	4.8E+00	4.6E-02	na	5.9E-03	6.0E-01	1.1E-03	5.8E-04	5.9E-04	6.0E+00	1.1E-02	na	5.9E-04	4.8E+00	1.1E-02	na	5.9E-04
Chloride	0	8.6E+05	2.3E+05	2.5E+05		1.7E+06	2.5E+06	na		2.2E+05	5.8E+04	2.5E+04		2.2E+06	6.1E+05	na		1.7E+06	6.1E+05	na	
TRC	0	1.9E+01	1.1E+01			3.8E+01	1.2E+02			4.8E+00	2.8E+00			4.8E+01	2.9E+01			3.8E+01	2.9E+01		
Chlorodibromomethane	0			6.9E+02	5.7E+04			na	1.3E+06			6.9E+01	5.7E+03			na	1.3E+05			na	
Chloroform [c]	0			5.7E+01	4.7E+03			na	4.7E+03			5.7E+00	4.7E+02			na	4.7E+02			na	4.7E+02
2-Chlorophenol	0			1.2E+02	4.0E+02			na	8.8E+03			1.2E+01	4.0E+01			na	8.8E+02			na	8.8E+02
Chlorpyrifos	0	8.3E-02	4.1E-02			1.7E-01	4.4E-01			2.1E-02	1.0E-02			2.1E-01	1.1E-01			1.7E-01	1.1E-01		
Chromium III	0	4.0E+02	7.8E+01			8.0E+02	8.3E+02			1.6E+02	1.9E+01			1.6E+03	2.1E+02			8.0E+02	2.1E+02		
Chromium VI	0	1.6E+01	1.1E+01			3.2E+01	1.2E+02			4.0E+00	2.8E+00			4.0E+01	2.9E+01			3.2E+01	2.9E+01		
Chrysene [c]	0			4.4E-02	4.9E-01			na	4.9E-01			4.4E-03	4.9E-02			na	4.9E-02			na	4.9E-02
Copper	0.8	3.3E+00	4.2E+00	1.3E+03		5.7E+00	3.8E+01	na		2.0E+00	1.7E+00	1.3E+02		1.3E+01	1.0E+01	na		5.7E+00	1.0E+01	na	
Cyanide	0	2.2E+01	5.2E+00	7.0E+02	2.2E+05	4.4E+01	5.6E+01	na	4.7E+06	5.5E+00	1.3E+00	7.0E+01	2.2E+04	5.5E+01	1.4E+01	na	4.7E+05	4.4E+01	1.4E+01	na	4.7E+05
DDD [c]	0			8.3E-03	8.4E-03			na	8.4E-03			8.3E-04	8.4E-04			na	8.4E-04			na	8.4E-04
DDE [c]	0			5.9E-03	5.9E-03			na	5.9E-03			5.9E-04	5.9E-04			na	5.9E-04			na	5.9E-04
DDT [c]	0	1.0E+00	1.0E-03	5.9E-03	5.9E-03	2.0E+00	1.1E-02	na	5.9E-03	2.5E-01	2.5E-04	5.9E-04	5.9E-04	2.5E+00	2.7E-03	na	5.9E-04	2.0E+00	2.7E-03	na	5.9E-04
Demeton	0		1.0E-01				1.1E+00				2.5E-02				2.7E-01				2.7E-01		

Parameter	Background	Water Quality Standard				Wasteload Allocations				Antidegradation Baseline				Antidegradation Allocations				Most Limiting Allocations			
(ug/l unless noted)	Conc.	Acute	Chronic	HH (PWS)	HH	Acute	Chronic	HH (PWS)	HH	Acute	Chronic	HH (PWS)	HH	Acute	Chronic	HH (PWS)	HH	Acute	Chronic	HH (PWS)	HH
Dibenz(a,h)anthracene [c]	0			4.4E-02	4.9E-01			na	4.9E-01			4.4E-03	4.9E-02			na	4.9E-02			na	4.9E-02
Dibutylphthalate	0			2.7E+03	1.2E+04			na	2.6E+05			2.7E+02	1.2E+03			na	2.6E+04			na	2.6E+04
Dichloromethane [c]	0			4.7E+01	1.6E+04			na	1.6E+04			4.7E+00	1.6E+03			na	1.6E+03			na	1.6E+03
1,2-Dichlorobenzene	0			2.7E+03	1.7E+04			na	3.7E+05			2.7E+02	1.7E+03			na	3.7E+04			na	3.7E+04
1,3-Dichlorobenzene	0			4.0E+02	2.6E+03			na	5.7E+04			4.0E+01	2.6E+02			na	5.7E+03			na	5.7E+03
1,4-Dichlorobenzene	0			4.0E+02	2.6E+03			na	5.7E+04			4.0E+01	2.6E+02			na	5.7E+03			na	5.7E+03
Dichlorobromomethane [c]	0			5.6E+00	4.6E+02			na	4.6E+02			5.6E-01	4.6E+01			na	4.6E+01			na	4.6E+01
1,2-Dichloroethane [c]	0			3.8E+00	9.9E+02			na	9.9E+02			3.8E-01	9.9E+01			na	9.9E+01			na	9.9E+01
1,1-Dichloroethylene	0			3.1E+02	1.7E+04			na	3.7E+05			3.1E+01	1.7E+03			na	3.7E+04			na	3.7E+04
2,4-Dichlorophenol	0			9.3E+01	7.9E+02			na	1.7E+04			9.3E+00	7.9E+01			na	1.7E+03			na	
(2,4-Dichlorophenoxy) acetic acid (2,4-D)	0			7.1E+01				na				7.1E+00				na				na	
Dieldrin [c]	0	2.5E+00	1.9E-03	1.4E-03	1.4E-03	5.0E+00	2.0E-02	na	1.4E-03	6.3E-01	4.8E-04	1.4E-04	1.4E-04	6.3E+00	5.1E-03	na	1.4E-04	5.0E+00	5.1E-03	na	1.4E-04
Diethylphthalate	0			2.3E+04	1.2E+05			na	2.6E+06			2.3E+03	1.2E+04			na	2.6E+05			na	2.6E+05
Di-2-ethylhexylphthalate [c]	0			1.8E+01	5.9E+01			na	5.9E+01			1.8E+00	5.9E+00			na	5.9E+00			na	5.9E+00
2,4-Dimethylphenol	0			5.4E+02	2.3E+03			na	5.1E+04			5.4E+01	2.3E+02			na	5.1E+03			na	5.1E+03
2,4-Dinitrotoluene [c]	0			1.1E+00	9.1E+01			na	9.1E+01			1.1E-01	9.1E+00			na	9.1E+00			na	9.1E+00
Dioxin (ppq)	0			1.2E-06	1.2E-06			na	2.6E-05			1.2E-07	1.2E-07			na	2.6E-06			na	2.6E-06
Endosulfan	0	2.2E-01	5.6E-02	1.1E+02	2.4E+02	4.4E-01	6.0E-01	na	5.3E+03	5.5E-02	1.4E-02	1.1E+01	2.4E+01	5.5E-01	1.5E-01	na	5.3E+02	4.4E-01	1.5E-01	na	5.3E+02
Endrin	0	1.8E-01	2.3E-03	7.6E-01	8.1E-01	3.6E-01	2.5E-02	na	1.8E+01	4.5E-02	5.8E-04	7.6E-02	8.1E-02	4.5E-01	6.1E-03	na	1.8E+00	3.6E-01	6.1E-03	na	1.8E+00
Ethylbenzene	0			3.1E+03	2.9E+04			na	6.4E+05			3.1E+02	2.9E+03			na	6.4E+04			na	6.4E+04
Fluoranthene	0			3.0E+02	3.7E+02			na	8.1E+03			3.0E+01	3.7E+01			na	8.1E+02			na	8.1E+02
Fluorene	0			1.3E+03	1.4E+04			na	3.1E+05			1.3E+02	1.4E+03			na	3.1E+04			na	3.1E+04
Foaming Agents	0			5.0E+02				na				5.0E+01				na				na	
Guthion	0		1.0E-02				1.1E-01				2.5E-03				2.7E-02				2.7E-02		
Heptachlor [c]	0	5.2E-01	3.8E-03	2.1E-03	2.1E-03	1.0E+00	4.1E-02	na	2.1E-03	1.3E-01	9.5E-04	2.1E-04	2.1E-04	1.3E+00	1.0E-02	na	2.1E-04	1.0E+00	1.0E-02	na	
Hexachlorocyclohexane (Lindane)	0	2.0E+00	8.0E-02	7.0E+00	2.5E+01	4.0E+00	8.6E-01	na	5.5E+02	5.0E-01	2.0E-02	7.0E-01	2.5E+00	5.0E+00	2.1E-01	na	5.5E+01	4.0E+00	2.1E-01	na	5.5E+01
Hydrogen Sulfide	0		2.0E+00				2.1E+01				5.0E-01				5.3E+00				5.3E+00		
Indeno(1,2,3-cd)pyrene C	0			4.4E-02	4.9E-01			na	4.9E-01			4.4E-03	4.9E-02			na	4.9E-02			na	4.9E-02
Iron	0			3.0E+02				na				3.0E+01				na				na	
Isophorone	0			6.9E+03	4.9E+05			na	1.1E+07			6.9E+02	4.9E+04			na	1.1E+06			na	1.1E+06
Kepone	0		0.0E+00				0.0E+00				0.0E+00				0.0E+00				0.0E+00		
Lead	0.4	1.2E+01	2.9E+00	1.5E+01		2.4E+01	2.8E+01	na		6.7E+00	1.0E+00	1.9E+00		6.4E+01	7.2E+00	na		2.4E+01	7.2E+00	na	
Malathion	0		1.0E-01				1.1E+00				2.5E-02				2.7E-01				2.7E-01		
Manganese	0			5.0E+01				na				5.0E+00				na				na	
Mercury	0	2.4E+00	1.2E-02	5.2E-02	5.3E-02	4.8E+00	1.3E-01	na	1.2E+00	6.0E-01	3.0E-03	5.2E-03	5.3E-03	6.0E+00	3.2E-02	na	1.2E-01	4.8E+00	3.2E-02	na	1.2E-01
Methoxychlor	0		3.0E-02	4.0E+01			3.2E-01	na			7.5E-03	4.0E+00			8.0E-02	na			8.0E-02	na	
Mirex	0		0.0E+00				0.0E+00				0.0E+00				0.0E+00				0.0E+00		
Monochlorobenzene	0			6.8E+02	2.1E+04			na	4.6E+05			6.8E+01	2.1E+03			na	4.6E+04			na	4.6E+04

Parameter	Background	Water Quality Standard				Wasteload Allocations				Antidegradation Baseline				Antidegradation Allocations				Most Limiting Allocations			
(ug/l unless noted)	Conc.	Acute	Chronic	HH (PWS)	HH	Acute	Chronic	HH (PWS)	HH	Acute	Chronic	HH (PWS)	HH	Acute	Chronic	HH (PWS)	HH	Acute	Chronic	HH (PWS)	HH
Nickel	0.7	4.0E+01	7.4E+00	6.1E+02	4.6E+03	7.9E+01	7.2E+01	na	1.0E+05	1.7E+01	2.4E+00	6.2E+01	4.6E+02	1.6E+02	1.9E+01	na	1.0E+04	7.9E+01	1.9E+01	na	1.0E+04
Nitrate (as N)	0			1.0E+04				na				1.0E+03				na				na	
Nitrobenzene	0			1.7E+01	1.9E+03			na	4.2E+04			1.7E+00	1.9E+02			na	4.2E+03			na	4.2E+03
Parathion	0	6.5E-02	1.3E-02			1.3E-01	1.4E-01			1.6E-02	3.3E-03			1.6E-01	3.5E-02			1.3E-01	3.5E-02		
PCB-1016 [c]	0		1.4E-02	4.4E-04	4.5E-04		1.5E-01	na	4.5E-04		3.5E-03	4.4E-05	4.5E-05		3.7E-02	na	4.5E-05		3.7E-02	na	4.5E-05
PCB-1221 [c]	0		1.4E-02	4.4E-04	4.5E-04		1.5E-01	na	4.5E-04		3.5E-03	4.4E-05	4.5E-05		3.7E-02	na	4.5E-05		3.7E-02	na	4.5E-05
PCB-1232 [c]	0		1.4E-02	4.4E-04	4.5E-04		1.5E-01	na	4.5E-04		3.5E-03	4.4E-05	4.5E-05		3.7E-02	na	4.5E-05		3.7E-02	na	4.5E-05
PCB-1242 [c]	0		1.4E-02	4.4E-04	4.5E-04		1.5E-01	na	4.5E-04		3.5E-03	4.4E-05	4.5E-05		3.7E-02	na	4.5E-05		3.7E-02	na	4.5E-05
PCB-1248 [c]	0		1.4E-02	4.4E-04	4.5E-04		1.5E-01	na	4.5E-04		3.5E-03	4.4E-05	4.5E-05		3.7E-02	na	4.5E-05		3.7E-02	na	4.5E-05
PCB-1254 [c]	0		1.4E-02	4.4E-04	4.5E-04		1.5E-01	na	4.5E-04		3.5E-03	4.4E-05	4.5E-05		3.7E-02	na	4.5E-05		3.7E-02	na	[illegible]
PCB-1260 [c]	0		1.4E-02	4.4E-04	4.5E-04		1.5E-01	na	4.5E-04		3.5E-03	4.4E-05	4.5E-05		3.7E-02	na	4.5E-05		3.7E-02	na	4.5E-05
Pentachlorophenol [c]	0	4.1E+00	2.6E+00	2.8E+00	8.2E+01	8.1E+00	2.7E+01	na	8.2E+01	1.0E+00	6.4E-01	2.8E-01	8.2E+00	1.0E+01	6.8E+00	na	8.2E+00	8.1E+00	6.8E+00	na	8.2E+00
Phenol	0			2.1E+04	4.6E+06			na	1.0E+08			2.1E+03	4.6E+05			na	1.0E+07			na	1.0E+07
Pyrene	0			9.6E+02	1.1E+04			na	2.4E+05			9.6E+01	1.1E+03			na	2.4E+04			na	2.4E+04
Radionuclides (pCi/l except Beta/Photon)	0																				
Gross Alpha Activity	0			1.5E+01	1.5E+01			na	3.3E+02			1.5E+00	1.5E+00			na	3.3E+01			na	3.3E+01
Beta and Photon Activity	0			4.0E+00	4.0E+00			na	8.8E+01			4.0E-01	4.0E-01			na	8.8E+00			na	8.8E+00
Strontium-90	0			8.0E+00	8.0E+00			na	1.8E+02			8.0E-01	8.0E-01			na	1.8E+01			na	1.8E+01
Tritium	0			2.0E+04	2.0E+04			na	4.4E+05			2.0E+03	2.0E+03			na	4.4E+04			na	4.4E+04
Selenium	0	2.0E+01	5.0E+00	1.7E+02	1.1E+04	4.0E+01	5.3E+01	na	2.4E+05	5.0E+00	1.3E+00	1.7E+01	1.1E+03	5.0E+01	1.3E+01	na	2.4E+04	4.0E+01	1.3E+01	na	2.4E+04
Silver	0	1.9E-01				3.7E-01				1.3E-01				1.3E+00				3.7E-01			
Sulfate	0			2.5E+05				na				2.5E+04				na				na	
Tetrachloroethylene	0			3.2E+02	3.5E+03			na	7.7E+04			3.2E+01	3.5E+02			na	7.7E+03			na	7.7E+03
Toluene	0			6.8E+03	2.0E+05			na	4.4E+06			6.8E+02	2.0E+04			na	4.4E+05			na	4.4E+05
Total dissolved solids	0			5.0E+05				na				5.0E+04				na				na	
Toxaphene [c]	0	7.3E-01	2.0E-04	7.3E-03	7.3E-03	1.5E+00	2.1E-03	na	7.3E-03	1.8E-01	5.0E-05	7.3E-04	7.3E-04	1.8E+00	5.3E-04	na	7.3E-04	1.5E+00	5.3E-04	na	[illegible]
1,2,4-Trichlorobenzene	0			2.6E+02	9.5E+02			na	2.1E+04			2.6E+01	9.5E+01			na	2.1E+03			na	2.1E+03
Trichloroethylene [c]	0			2.7E+01	8.1E+02			na	8.1E+02			2.7E+00	8.1E+01			na	8.1E+01			na	8.1E+01
2,4,6-Trichlorophenol [c]	0			2.1E+01	6.5E+01			na	6.5E+01			2.1E+00	6.5E+00			na	6.5E+00			na	6.5E+00
2-(2,4,5-Trichlorophenoxy) propionic acid (Silvex)	0			5.0E+01				na				5.0E+00				na				na	
Tributyltin	0	4.6E-01	2.6E-02			9.2E-01	2.8E-01			1.2E-01	6.5E-03			1.2E+00	6.9E-02			9.2E-01	6.9E-02		
Vinyl Chloride	0			2.0E+01	5.3E+03			na	1.2E+05			2.0E+00	5.3E+02			na	1.2E+04			na	1.2E+04
Zinc	0.12	2.6E+01	3.8E+01	5.0E+03		5.1E+01	4.1E+02	na		1.1E+01	9.7E+00	5.0E+02		1.1E+02	1.0E+02	na		5.1E+01	1.0E+02	na	

[c] = carcinogenic

Regular WLA = [WQS((%MIX/100)(stream flow) + design flow) - (streamflow)(background conc.)]/design flow

Antideg. Baseline = (0.25(WQS - background conc.) + bacground conc.) for acute and chronic

= (0.1(WQS - background conc.) + background conc.) for human health

Antideg. WLA = [Baseline(stream flow + design flow) - (stream flow)(background conc.)]/design flow

= data entry cells

= protected cells

Metal	Target Value (SSTV)
Antimony	9.5E+03
Arsenic	na
Arsenic III	2.9E+02
Barium	na
Cadmium	4.1E-01
Chromium III	1.2E+02
Chromium VI	1.3E+01
Copper	2.3E+00
Iron	na
Lead	4.3E+00
Manganese	na
Mercury	1.9E-02
Nickel	1.1E+01
Selenium	8.0E+00
Silver	1.5E-01
Zinc	2.0E+01

Note: do not use QL's lower than the minimum QL's provided in agency guidance

All possible acute and chronic criteria (in mg/l) have been calculated:
Program enters the applicable set of criteria in K149 and K155.

		unionized	total	NH3-N
Acute Criteria:	16.6028			
When pH > 8.0:		0.3935259	42.974689	35.3252
When pH < 8.0:		0.1849563	20.198009	16.6028
Chronic Criteria:	2.02622			
When pH > 8.0:		0.0896925	9.7948009	8.05133
When 7.7 < pH < 8.0:		0.0421553	4.6035349	3.78411
When pH < 7.7:		0.0225723	2.4649855	2.02622

	Regular WLA	Antideg. WLA
Eff. 7Q10	19.38	19.38
Eff. 1Q10	1.9899	18.09
Acute hardness	16.6079	29.9849
Chronic Hardness	30.1849	30.1849

7/12

Permit No	Facility Name	Due Date	Received Date	Outfall No	Parameter Description	QTYAVG	QTYMAX	CONCMIN	CONCAVG	CONCMAX
VA0003433	Hercules Incorporated - Franklin	10-Jan-10	11-Jan-10	002	FLOW	4.21	7.24			
VA0003433	Hercules Incorporated - Franklin	10-Feb-10	10-Feb-10	002	FLOW	3.27	5.38			
VA0003433	Hercules Incorporated - Franklin	10-Mar-10	10-Mar-10	002	FLOW	3.61	7.00			
VA0003433	Hercules Incorporated - Franklin	10-Apr-10	12-Apr-10	002	FLOW	3.68	4.64			
VA0003433	Hercules Incorporated - Franklin	10-May-10	11-May-10	002	FLOW	3.38	4.24			
VA0003433	Hercules Incorporated - Franklin	10-Jun-10	9-Jun-10	002	FLOW	3.50	3.97			
VA0003433	Hercules Incorporated - Franklin	10-Jul-10	12-Jul-10	002	FLOW	2.84	4.14			
VA0003433	Hercules Incorporated - Franklin	10-Aug-10	10-Aug-10	002	FLOW	2.78	3.45			
VA0003433	Hercules Incorporated - Franklin	10-Sep-10	13-Sep-10	002	FLOW	4.04	6.91			
VA0003433	Hercules Incorporated - Franklin	10-Oct-10	12-Oct-10	002	FLOW	3.76	5.37			
VA0003433	Hercules Incorporated - Franklin	10-Nov-10	9-Nov-10	002	FLOW	3.94	5.38			
VA0003433	Hercules Incorporated - Franklin	10-Dec-10	9-Dec-10	002	FLOW	3.32	6.26			
VA0003433	Hercules Incorporated - Franklin	10-Jan-11	10-Jan-11	002	FLOW	2.49	3.66			
VA0003433	Hercules Incorporated - Franklin	10-Feb-11	9-Feb-11	002	FLOW	2.99	4.04			
VA0003433	Hercules Incorporated - Franklin	10-Mar-11	9-Mar-11	002	FLOW	3.67	4.10			

VA0003433	Hercules Incorporated - Franklin	10-Apr-11	8-Apr-11	002	FLOW	3.76	5.66			
VA0003433	Hercules Incorporated - Franklin	10-May-11	9-May-11	002	FLOW	2.70	3.49			
VA0003433	Hercules Incorporated - Franklin	10-Jun-11	8-Jun-11	002	FLOW	2.76	4.92			
VA0003433	Hercules Incorporated - Franklin	10-Jul-11	8-Jul-11	002	FLOW	2.75	3.71			
VA0003433	Hercules Incorporated - Franklin	10-Aug-11	9-Aug-11	002	FLOW	3.13	5.38			
VA0003433	Hercules Incorporated - Franklin	10-Sep-11	9-Sep-11	002	FLOW	3.53	6.92			
VA0003433	Hercules Incorporated - Franklin	10-Oct-11	6-Oct-11	002	FLOW	4.08	8.44			
VA0003433	Hercules Incorporated - Franklin	10-Nov-11	8-Nov-11	002	FLOW	2.63	3.83			
VA0003433	Hercules Incorporated - Franklin	10-Dec-11	8-Dec-11	002	FLOW	2.92	3.45			
VA0003433	Hercules Incorporated - Franklin	10-Jan-12	9-Jan-12	002	FLOW	3.18	6.44			
VA0003433	Hercules Incorporated - Franklin	10-Feb-12	7-Feb-12	002	FLOW	2.77	3.58			
VA0003433	Hercules Incorporated - Franklin	10-Mar-12	9-Mar-12	002	FLOW	2.77	3.86			
VA0003433	Hercules Incorporated - Franklin	10-Apr-12	6-Apr-12	002	FLOW	2.41	4.02			

VA0003433	Hercules Incorporated - Franklin	10-May-12	4-May-12	002	FLOW	2.05	4.02			
VA0003433	Hercules Incorporated - Franklin	10-Jun-12	8-Jun-12	002	FLOW	2.89	4.07			
VA0003433	Hercules Incorporated - Franklin	10-Jul-12	9-Jul-12	002	FLOW	3.27	5.12			
VA0003433	Hercules Incorporated - Franklin	10-Aug-12	9-Aug-12	002	FLOW	2.93	4.67			
VA0003433	Hercules Incorporated - Franklin	10-Sep-12	10-Sep-12	002	FLOW	3.23	4.27			
VA0003433	Hercules Incorporated - Franklin	10-Oct-12	9-Oct-12	002	FLOW	3.23	3.55			
VA0003433	Hercules Incorporated - Franklin	10-Nov-12	9-Nov-12	002	FLOW	3.24	4.91			
VA0003433	Hercules Incorporated - Franklin	10-Dec-12	10-Dec-12	002	FLOW	3.14	3.86			
VA0003433	Hercules Incorporated - Franklin	10-Jan-13	9-Jan-13	002	FLOW	3.08	3.84			
VA0003433	Hercules Incorporated - Franklin	10-Feb-13		002	FLOW					
VA0003433	Hercules Incorporated - Franklin	10-Mar-13		002	FLOW					
VA0003433	Hercules Incorporated - Franklin	10-Jan-10	11-Jan-10	002	PH			7.30		7.93
VA0003433	Hercules Incorporated - Franklin	10-Feb-10	10-Feb-10	002	PH			7.77		7.90
VA0003433	Hercules Incorporated - Franklin	10-Mar-10	10-Mar-10	002	PH			7.22		7.94
VA0003433	Hercules Incorporated - Franklin	10-Apr-10	12-Apr-10	002	PH			7.78		7.96
VA0003433	Hercules Incorporated - Franklin	10-May-10	11-May-10	002	PH			7.98		8.20
VA0003433	Hercules Incorporated - Franklin	10-Jun-10	9-Jun-10	002	PH			7.95		8.20
VA0003433	Hercules Incorporated - Franklin	10-Jul-10	12-Jul-10	002	PH			8.00		8.07
VA0003433	Hercules Incorporated - Franklin	10-Aug-10	10-Aug-10	002	PH			7.90		8.11
VA0003433	Hercules Incorporated - Franklin	10-Sep-10	13-Sep-10	002	PH			7.86		8.12

VA0003433	Hercules Incorporated - Franklin	10-Oct-10	12-Oct-10	002	PH			7.56		8.23
VA0003433	Hercules Incorporated - Franklin	10-Nov-10	9-Nov-10	002	PH			7.34		8.06
VA0003433	Hercules Incorporated - Franklin	10-Dec-10	9-Dec-10	002	PH			7.90		8.17
VA0003433	Hercules Incorporated - Franklin	10-Jan-11	10-Jan-11	002	PH			7.86		8.14
VA0003433	Hercules Incorporated - Franklin	10-Feb-11	9-Feb-11	002	PH			7.76		8.09
VA0003433	Hercules Incorporated - Franklin	10-Mar-11	9-Mar-11	002	PH			7.95		8.19
VA0003433	Hercules Incorporated - Franklin	10-Apr-11	8-Apr-11	002	PH			7.93		8.29
VA0003433	Hercules Incorporated - Franklin	10-May-11	9-May-11	002	PH			8.1		8.4
VA0003433	Hercules Incorporated - Franklin	10-Jun-11	8-Jun-11	002	PH			8.1		8.3
VA0003433	Hercules Incorporated - Franklin	10-Jul-11	8-Jul-11	002	PH			7.4		8.2
VA0003433	Hercules Incorporated - Franklin	10-Aug-11	9-Aug-11	002	PH			8.07		8.2
VA0003433	Hercules Incorporated - Franklin	10-Sep-11	9-Sep-11	002	PH			8.0		8.2

VA0003433	Hercules Incorporated - Franklin	10-Oct-11	6-Oct-11	002	PH			7.94		8.18
VA0003433	Hercules Incorporated - Franklin	10-Nov-11	8-Nov-11	002	PH			7.59		7.99
VA0003433	Hercules Incorporated - Franklin	10-Dec-11	8-Dec-11	002	PH			8.0		8.2
VA0003433	Hercules Incorporated - Franklin	10-Jan-12	9-Jan-12	002	PH			8.0		8.3
VA0003433	Hercules Incorporated - Franklin	10-Feb-12	7-Feb-12	002	PH			7.9		8.2
VA0003433	Hercules Incorporated - Franklin	10-Mar-12	9-Mar-12	002	PH			8.1		8.2
VA0003433	Hercules Incorporated - Franklin	10-Apr-12	6-Apr-12	002	PH			7.9		8.2
VA0003433	Hercules Incorporated - Franklin	10-May-12	4-May-12	002	PH			8.0		8.3
VA0003433	Hercules Incorporated - Franklin	10-Jun-12	8-Jun-12	002	PH			8.0		8.1
VA0003433	Hercules Incorporated - Franklin	10-Jul-12	9-Jul-12	002	PH			7.7		8.1
VA0003433	Hercules Incorporated - Franklin	10-Aug-12	9-Aug-12	002	PH			7.8		8.1
VA0003433	Hercules Incorporated - Franklin	10-Sep-12	10-Sep-12	002	PH			7.7		8.1
VA0003433	Hercules Incorporated - Franklin	10-Oct-12	9-Oct-12	002	PH			7.9		8.0
VA0003433	Hercules Incorporated - Franklin	10-Nov-12	9-Nov-12	002	PH			7.9		8.1
VA0003433	Hercules Incorporated - Franklin	10-Dec-12	10-Dec-12	002	PH			8.1		8.1
VA0003433	Hercules Incorporated - Franklin	10-Jan-13	9-Jan-13	002	PH			8.0		8.1
VA0003433	Hercules Incorporated - Franklin	10-Feb-13		002	PH					
VA0003433	Hercules Incorporated - Franklin	10-Mar-13		002	PH					

VA0003433	Hercules Incorporated - Franklin	10-Jan-10	11-Jan-10	002	BOD5				6	6
VA0003433	Hercules Incorporated - Franklin	10-Feb-10	10-Feb-10	002	BOD5				5	5
VA0003433	Hercules Incorporated - Franklin	10-Mar-10	10-Mar-10	002	BOD5				<QL	<QL
VA0003433	Hercules Incorporated - Franklin	10-Apr-10	12-Apr-10	002	BOD5				<QL	<QL
VA0003433	Hercules Incorporated - Franklin	10-May-10	11-May-10	002	BOD5				<QL	<QL
VA0003433	Hercules Incorporated - Franklin	10-Jun-10	9-Jun-10	002	BOD5				6	6
VA0003433	Hercules Incorporated - Franklin	10-Jul-10	12-Jul-10	002	BOD5				<QL	<QL
VA0003433	Hercules Incorporated - Franklin	10-Aug-10	10-Aug-10	002	BOD5				<QL	<QL
VA0003433	Hercules Incorporated - Franklin	10-Sep-10	13-Sep-10	002	BOD5				<QL	<QL
VA0003433	Hercules Incorporated - Franklin	10-Oct-10	12-Oct-10	002	BOD5				<QL	<QL
VA0003433	Hercules Incorporated - Franklin	10-Nov-10	9-Nov-10	002	BOD5				6	219
VA0003433	Hercules Incorporated - Franklin	10-Dec-10	9-Dec-10	002	BOD5				3	3
VA0003433	Hercules Incorporated - Franklin	10-Jan-11	10-Jan-11	002	BOD5				3	3
VA0003433	Hercules Incorporated - Franklin	10-Feb-11	9-Feb-11	002	BOD5				4	4
VA0003433	Hercules Incorporated - Franklin	10-Mar-11	9-Mar-11	002	BOD5				4	4
VA0003433	Hercules Incorporated - Franklin	10-Apr-11	8-Apr-11	002	BOD5				4	4

VA0003433	Hercules Incorporated - Franklin	10-May-11	9-May-11	002	BOD5				2	2
VA0003433	Hercules Incorporated - Franklin	10-Jun-11	8-Jun-11	002	BOD5				2	2
VA0003433	Hercules Incorporated - Franklin	10-Jul-11	8-Jul-11	002	BOD5				6	6
VA0003433	Hercules Incorporated - Franklin	10-Aug-11	9-Aug-11	002	BOD5				<2	<2
VA0003433	Hercules Incorporated - Franklin	10-Sep-11	9-Sep-11	002	BOD5				2	2
VA0003433	Hercules Incorporated - Franklin	10-Oct-11	6-Oct-11	002	BOD5				<2	<2
VA0003433	Hercules Incorporated - Franklin	10-Nov-11	8-Nov-11	002	BOD5				<2	<2
VA0003433	Hercules Incorporated - Franklin	10-Dec-11	8-Dec-11	002	BOD5				<2	<2
VA0003433	Hercules Incorporated - Franklin	10-Jan-12	9-Jan-12	002	BOD5				<16	<16
VA0003433	Hercules Incorporated - Franklin	10-Feb-12	7-Feb-12	002	BOD5				<6	<6
VA0003433	Hercules Incorporated - Franklin	10-Mar-12	9-Mar-12	002	BOD5				<2	<2
VA0003433	Hercules Incorporated - Franklin	10-Apr-12	6-Apr-12	002	BOD5				<2	<2
VA0003433	Hercules Incorporated - Franklin	10-May-12	4-May-12	002	BOD5				<2	<2
VA0003433	Hercules Incorporated - Franklin	10-Jun-12	8-Jun-12	002	BOD5				<2	<2

VA0003433	Hercules Incorporated - Franklin	10-Jul-12	9-Jul-12	002	BOD5				<2	<2
VA0003433	Hercules Incorporated - Franklin	10-Aug-12	9-Aug-12	002	BOD5				<2	<2
VA0003433	Hercules Incorporated - Franklin	10-Sep-12	10-Sep-12	002	BOD5				<2	<2
VA0003433	Hercules Incorporated - Franklin	10-Oct-12	9-Oct-12	002	BOD5				<2	<2
VA0003433	Hercules Incorporated - Franklin	10-Nov-12	9-Nov-12	002	BOD5				<2	<2
VA0003433	Hercules Incorporated - Franklin	10-Dec-12	10-Dec-12	002	BOD5				<2	<2
VA0003433	Hercules Incorporated - Franklin	10-Jan-13	9-Jan-13	002	BOD5				<3	<3
VA0003433	Hercules Incorporated - Franklin	10-Feb-13		002	BOD5					
VA0003433	Hercules Incorporated - Franklin	10-Mar-13		002	BOD5					
VA0003433	Hercules Incorporated - Franklin	10-Mar-10	10-Mar-10	002	DO			4.92		
VA0003433	Hercules Incorporated - Franklin	10-Apr-10	12-Apr-10	002	DO			6.10		
VA0003433	Hercules Incorporated - Franklin	10-May-10	11-May-10	002	DO			5.6		
VA0003433	Hercules Incorporated - Franklin	10-Jun-10	9-Jun-10	002	DO			6.55		
VA0003433	Hercules Incorporated - Franklin	10-Jul-10	12-Jul-10	002	DO			5.23		
VA0003433	Hercules Incorporated - Franklin	10-Aug-10	10-Aug-10	002	DO			5.80		
VA0003433	Hercules Incorporated - Franklin	10-Sep-10	13-Sep-10	002	DO			5.20		
VA0003433	Hercules Incorporated - Franklin	10-Oct-10	12-Oct-10	002	DO			5.90		
VA0003433	Hercules Incorporated - Franklin	10-Nov-10	9-Nov-10	002	DO			6.47		
VA0003433	Hercules Incorporated - Franklin	10-Dec-10	9-Dec-10	002	DO			6.14		
VA0003433	Hercules Incorporated - Franklin	10-Jan-11	10-Jan-11	002	DO			5.1		

VA0003433	Hercules Incorporated - Franklin	10-Feb-11	9-Feb-11	002	DO			6.2		
VA0003433	Hercules Incorporated - Franklin	10-Mar-11	9-Mar-11	002	DO			5.2		
VA0003433	Hercules Incorporated - Franklin	10-Apr-11	8-Apr-11	002	DO			6.2		
VA0003433	Hercules Incorporated - Franklin	10-May-11	9-May-11	002	DO			6.1		
VA0003433	Hercules Incorporated - Franklin	10-Jun-11	8-Jun-11	002	DO			5.7		
VA0003433	Hercules Incorporated - Franklin	10-Jul-11	8-Jul-11	002	DO			6.4		
VA0003433	Hercules Incorporated - Franklin	10-Aug-11	9-Aug-11	002	DO			6.8		
VA0003433	Hercules Incorporated - Franklin	10-Sep-11	9-Sep-11	002	DO			6.7		
VA0003433	Hercules Incorporated - Franklin	10-Oct-11	6-Oct-11	002	DO			5.2		
VA0003433	Hercules Incorporated - Franklin	10-Nov-11	8-Nov-11	002	DO			4.9		
VA0003433	Hercules Incorporated - Franklin	10-Dec-11	8-Dec-11	002	DO			4.6		

VA0003433	Hercules Incorporated - Franklin	10-Jan-12	9-Jan-12	002	DO			6.6		
VA0003433	Hercules Incorporated - Franklin	10-Feb-12	7-Feb-12	002	DO			6.3		
VA0003433	Hercules Incorporated - Franklin	10-Mar-12	9-Mar-12	002	DO			6.0		
VA0003433	Hercules Incorporated - Franklin	10-Apr-12	6-Apr-12	002	DO			6.6		
VA0003433	Hercules Incorporated - Franklin	10-May-12	4-May-12	002	DO			6.8		
VA0003433	Hercules Incorporated - Franklin	10-Jun-12	8-Jun-12	002	DO			6.3		
VA0003433	Hercules Incorporated - Franklin	10-Jul-12	9-Jul-12	002	DO			5.5		
VA0003433	Hercules Incorporated - Franklin	10-Aug-12	9-Aug-12	002	DO			6.0		
VA0003433	Hercules Incorporated - Franklin	10-Sep-12	10-Sep-12	002	DO			6.2		
VA0003433	Hercules Incorporated - Franklin	10-Oct-12	9-Oct-12	002	DO			6.3		
VA0003433	Hercules Incorporated - Franklin	10-Nov-12	9-Nov-12	002	DO			7.2		
VA0003433	Hercules Incorporated - Franklin	10-Dec-12	10-Dec-12	002	DO			7.2		
VA0003433	Hercules Incorporated - Franklin	10-Jan-13	9-Jan-13	002	DO			6.6		
VA0003433	Hercules Incorporated - Franklin	10-Feb-13		002	DO					
VA0003433	Hercules Incorporated - Franklin	10-Mar-13		002	DO					
VA0003433	Hercules Incorporated - Franklin	10-Jan-10	11-Jan-10	002	PHOSPHORUS, TOTAL (AS P)	33.6			1.18	
VA0003433	Hercules Incorporated - Franklin	10-Feb-10	10-Feb-10	002	PHOSPHORUS, TOTAL (AS P)	29.5			1.11	
VA0003433	Hercules Incorporated - Franklin	10-Mar-10	10-Mar-10	002	PHOSPHORUS, TOTAL (AS P)	38.4			1.20	

VA0003433	Hercules Incorporated - Franklin	10-Apr-10	12-Apr-10	002	PHOSPHORUS, TOTAL (AS P)	33.8			1.13	
VA0003433	Hercules Incorporated - Franklin	10-May-10	11-May-10	002	PHOSPHORUS, TOTAL (AS P)	32.8			1.16	1.22
VA0003433	Hercules Incorporated - Franklin	10-Jun-10	9-Jun-10	002	PHOSPHORUS, TOTAL (AS P)	33.5			1.17	
VA0003433	Hercules Incorporated - Franklin	10-Jul-10	12-Jul-10	002	PHOSPHORUS, TOTAL (AS P)	28.2			1.13	
VA0003433	Hercules Incorporated - Franklin	10-Aug-10	10-Aug-10	002	PHOSPHORUS, TOTAL (AS P)	24.8			1.12	
VA0003433	Hercules Incorporated - Franklin	10-Sep-10	13-Sep-10	002	PHOSPHORUS, TOTAL (AS P)	38.8			1.16	
VA0003433	Hercules Incorporated - Franklin	10-Oct-10	12-Oct-10	002	PHOSPHORUS, TOTAL (AS P)	42.7			1.01	
VA0003433	Hercules Incorporated - Franklin	10-Nov-10	9-Nov-10	002	PHOSPHORUS, TOTAL (AS P)	35.2			1.12	
VA0003433	Hercules Incorporated - Franklin	10-Dec-10	9-Dec-10	002	PHOSPHORUS, TOTAL (AS P)	36.6			1.33	
VA0003433	Hercules Incorporated - Franklin	10-Jan-11	10-Jan-11	002	PHOSPHORUS, TOTAL (AS P)	25.6			1.20	

VA0003433	Hercules Incorporated - Franklin	10-Feb-11	9-Feb-11	002	PHOSPHORUS, TOTAL (AS P)	34.6			1.19	
VA0003433	Hercules Incorporated - Franklin	10-Mar-11	9-Mar-11	002	PHOSPHORUS, TOTAL (AS P)	31.5			1.08	
VA0003433	Hercules Incorporated - Franklin	10-Apr-11	8-Apr-11	002	PHOSPHORUS, TOTAL (AS P)	29.2			0.94	
VA0003433	Hercules Incorporated - Franklin	10-May-11	9-May-11	002	PHOSPHORUS, TOTAL (AS P)	25			1.1	
VA0003433	Hercules Incorporated - Franklin	10-Jun-11	8-Jun-11	002	PHOSPHORUS, TOTAL (AS P)	24			1.1	
VA0003433	Hercules Incorporated - Franklin	10-Jul-11	8-Jul-11	002	PHOSPHORUS, TOTAL (AS P)	22.6			1.04	
VA0003433	Hercules Incorporated - Franklin	10-Aug-11	9-Aug-11	002	PHOSPHORUS, TOTAL (AS P)	28.4			1.12	
VA0003433	Hercules Incorporated - Franklin	10-Sep-11	9-Sep-11	002	PHOSPHORUS, TOTAL (AS P)	38.7			1.14	
VA0003433	Hercules Incorporated - Franklin	10-Oct-11	6-Oct-11	002	PHOSPHORUS, TOTAL (AS P)	36			1.0	
VA0003433	Hercules Incorporated - Franklin	10-Nov-11	8-Nov-11	002	PHOSPHORUS, TOTAL (AS P)	29			1.21	

VA0003433	Hercules Incorporated - Franklin	10-Dec-11	8-Dec-11	002	PHOSPHORUS, TOTAL (AS P)	32.3			1.4	
VA0003433	Hercules Incorporated - Franklin	10-Jan-12	9-Jan-12	002	PHOSPHORUS, TOTAL (AS P)	36			1.4	
VA0003433	Hercules Incorporated - Franklin	10-Feb-12	7-Feb-12	002	PHOSPHORUS, TOTAL (AS P)	26			1.2	
VA0003433	Hercules Incorporated - Franklin	10-Mar-12	9-Mar-12	002	PHOSPHORUS, TOTAL (AS P)	25			1.1	
VA0003433	Hercules Incorporated - Franklin	10-Apr-12	6-Apr-12	002	PHOSPHORUS, TOTAL (AS P)	22			1.2	
VA0003433	Hercules Incorporated - Franklin	10-May-12	4-May-12	002	PHOSPHORUS, TOTAL (AS P)	30			1.1	
VA0003433	Hercules Incorporated - Franklin	10-Jun-12	8-Jun-12	002	PHOSPHORUS, TOTAL (AS P)	30			1.1	
VA0003433	Hercules Incorporated - Franklin	10-Jul-12	9-Jul-12	002	PHOSPHORUS, TOTAL (AS P)	32			1.2	
VA0003433	Hercules Incorporated - Franklin	10-Aug-12	9-Aug-12	002	PHOSPHORUS, TOTAL (AS P)	38			1.6	
VA0003433	Hercules Incorporated - Franklin	10-Sep-12	10-Sep-12	002	PHOSPHORUS, TOTAL (AS P)	37			1.2	

VA0003433	Hercules Incorporated - Franklin	10-Oct-12	9-Oct-12	002	PHOSPHORUS, TOTAL (AS P)	30			1.1	
VA0003433	Hercules Incorporated - Franklin	10-Nov-12	9-Nov-12	002	PHOSPHORUS, TOTAL (AS P)	29			1.1	
VA0003433	Hercules Incorporated - Franklin	10-Dec-12	10-Dec-12	002	PHOSPHORUS, TOTAL (AS P)	33			1.2	
VA0003433	Hercules Incorporated - Franklin	10-Jan-13	9-Jan-13	002	PHOSPHORUS, TOTAL (AS P)	32			1.3	
VA0003433	Hercules Incorporated - Franklin	10-Feb-13		002	PHOSPHORUS, TOTAL (AS P)					
VA0003433	Hercules Incorporated - Franklin	10-Mar-13		002	PHOSPHORUS, TOTAL (AS P)					
VA0003433	Hercules Incorporated - Franklin	10-Jan-10	11-Jan-10	002	NITROGEN, TOTAL (AS N)	7.91			0.28	
VA0003433	Hercules Incorporated - Franklin	10-Feb-10	10-Feb-10	002	NITROGEN, TOTAL (AS N)	7.07			0.25	
VA0003433	Hercules Incorporated - Franklin	10-Mar-10	10-Mar-10	002	NITROGEN, TOTAL (AS N)	17.40			0.70	
VA0003433	Hercules Incorporated - Franklin	10-Apr-10	12-Apr-10	002	NITROGEN, TOTAL (AS N)	<5.5			<0.2	
VA0003433	Hercules Incorporated - Franklin	10-May-10	11-May-10	002	NITROGEN, TOTAL (AS N)	8.59			0.30	

VA0003433	Hercules Incorporated - Franklin	10-Jun-10	9-Jun-10	002	NITROGEN, TOTAL (AS N)	11.82			0.40	
VA0003433	Hercules Incorporated - Franklin	10-Jul-10	12-Jul-10	002	NITROGEN, TOTAL (AS N)	<5.5			<0.2	
VA0003433	Hercules Incorporated - Franklin	10-Aug-10	10-Aug-10	002	NITROGEN, TOTAL (AS N)	124.16			6.0	
VA0003433	Hercules Incorporated - Franklin	10-Sep-10	13-Sep-10	002	NITROGEN, TOTAL (AS N)	20.14			0.80	
VA0003433	Hercules Incorporated - Franklin	10-Oct-10	12-Oct-10	002	NITROGEN, TOTAL (AS N)	13.93			0.40	
VA0003433	Hercules Incorporated - Franklin	10-Nov-10	9-Nov-10	002	NITROGEN, TOTAL (AS N)	<7.30			<0.20	
VA0003433	Hercules Incorporated - Franklin	10-Dec-10	9-Dec-10	002	NITROGEN, TOTAL (AS N)	<3.12			<0.10	
VA0003433	Hercules Incorporated - Franklin	10-Jan-11	10-Jan-11	002	NITROGEN, TOTAL (AS N)	<2.59			<0.10	
VA0003433	Hercules Incorporated - Franklin	10-Feb-11	9-Feb-11	002	NITROGEN, TOTAL (AS N)	9.07			0.3	
VA0003433	Hercules Incorporated - Franklin	10-Mar-11	9-Mar-11	002	NITROGEN, TOTAL (AS N)	16.64			0.60	
VA0003433	Hercules Incorporated - Franklin	10-Apr-11	8-Apr-11	002	NITROGEN, TOTAL (AS N)	18.75			0.60	
VA0003433	Hercules Incorporated - Franklin	10-May-11	9-May-11	002	NITROGEN, TOTAL (AS N)	<2.36			<0.10	

VA0003433	Hercules Incorporated - Franklin	10-Jun-11	8-Jun-11	002	NITROGEN, TOTAL (AS N)	<1.89			<0.10	
VA0003433	Hercules Incorporated - Franklin	10-Jul-11	8-Jul-11	002	NITROGEN, TOTAL (AS N)	<3.46			<0.20	
VA0003433	Hercules Incorporated - Franklin	10-Aug-11	9-Aug-11	002	NITROGEN, TOTAL (AS N)	7.53			0.30	
VA0003433	Hercules Incorporated - Franklin	10-Sep-11	9-Sep-11	002	NITROGEN, TOTAL (AS N)	11.02			0.3	
VA0003433	Hercules Incorporated - Franklin	10-Oct-11	6-Oct-11	002	NITROGEN, TOTAL (AS N)	11.07			0.30	
VA0003433	Hercules Incorporated - Franklin	10-Nov-11	8-Nov-11	002	NITROGEN, TOTAL (AS N)	<3.94			<0.2	
VA0003433	Hercules Incorporated - Franklin	10-Dec-11	8-Dec-11	002	NITROGEN, TOTAL (AS N)	<4.8			<0.2	
VA0003433	Hercules Incorporated - Franklin	10-Jan-12	9-Jan-12	002	NITROGEN, TOTAL (AS N)	<5.2			<0.2	
VA0003433	Hercules Incorporated - Franklin	10-Feb-12	7-Feb-12	002	NITROGEN, TOTAL (AS N)	0.4			8.8	
VA0003433	Hercules Incorporated - Franklin	10-Mar-12	9-Mar-12	002	NITROGEN, TOTAL (AS N)	36.6			1.6	
VA0003433	Hercules Incorporated - Franklin	10-Apr-12	6-Apr-12	002	NITROGEN, TOTAL (AS N)	10.5			0.4	
VA0003433	Hercules Incorporated - Franklin	10-May-12	4-May-12	002	NITROGEN, TOTAL (AS N)	<4.9			<0.2	

VA0003433	Hercules Incorporated - Franklin	10-Jun-12	8-Jun-12	002	NITROGEN, TOTAL (AS N)	<4.9			<0.2	
VA0003433	Hercules Incorporated - Franklin	10-Jul-12	9-Jul-12	002	NITROGEN, TOTAL (AS N)	<5.3			<0.2	
VA0003433	Hercules Incorporated - Franklin	10-Aug-12	9-Aug-12	002	NITROGEN, TOTAL (AS N)	<45.7			<0.2	
VA0003433	Hercules Incorporated - Franklin	10-Sep-12	10-Sep-12	002	NITROGEN, TOTAL (AS N)	<6.1			<0.2	
VA0003433	Hercules Incorporated - Franklin	10-Oct-12	9-Oct-12	002	NITROGEN, TOTAL (AS N)	<4.6			<0.2	
VA0003433	Hercules Incorporated - Franklin	10-Nov-12	9-Nov-12	002	NITROGEN, TOTAL (AS N)	38.3			1.4	
VA0003433	Hercules Incorporated - Franklin	10-Dec-12	10-Dec-12	002	NITROGEN, TOTAL (AS N)	11.4			0.4	
VA0003433	Hercules Incorporated - Franklin	10-Jan-13	9-Jan-13	002	NITROGEN, TOTAL (AS N)	<5.0			<0.2	
VA0003433	Hercules Incorporated - Franklin	10-Feb-13		002	NITROGEN, TOTAL (AS N)					
VA0003433	Hercules Incorporated - Franklin	10-Mar-13		002	NITROGEN, TOTAL (AS N)					
VA0003433	Hercules Incorporated - Franklin	10-Jan-10	12-Nov-09	002	CHROMIUM, HEXAVALENT (AS CR)				<5	<5
VA0003433	Hercules Incorporated - Franklin	10-Apr-10	10-Feb-10	002	CHROMIUM, HEXAVALENT (AS CR)				<5	<5

VA0003433	Hercules Incorporated - Franklin	10-Jul-10	11-May-10	002	CHROMIUM, HEXAVALENT (AS CR)				<5	<5
VA0003433	Hercules Incorporated - Franklin	10-Oct-10	10-Aug-10	002	CHROMIUM, HEXAVALENT (AS CR)				<5	<5
VA0003433	Hercules Incorporated - Franklin	10-Jan-11	9-Nov-10	002	CHROMIUM, HEXAVALENT (AS CR)				<5.0	<5.0
VA0003433	Hercules Incorporated - Franklin	10-Apr-11	9-Mar-11	002	CHROMIUM, HEXAVALENT (AS CR)				<5	<5
VA0003433	Hercules Incorporated - Franklin	10-Jul-11	8-Jul-11	002	CHROMIUM, HEXAVALENT (AS CR)				<5	<5
VA0003433	Hercules Incorporated - Franklin	10-Oct-11	9-Sep-11	002	CHROMIUM, HEXAVALENT (AS CR)				<5	<5
VA0003433	Hercules Incorporated - Franklin	10-Jan-12	8-Dec-11	002	CHROMIUM, HEXAVALENT (AS CR)				<5	<5

VA0003433	Hercules Incorporated - Franklin	10-Apr-12	9-Mar-12	002	CHROMIUM, HEXAVALENT (AS CR)				<5	<5
VA0003433	Hercules Incorporated - Franklin	10-Jul-12	8-Jun-12	002	CHROMIUM, HEXAVALENT (AS CR)				<5	<5
VA0003433	Hercules Incorporated - Franklin	10-Oct-12	10-Sep-12	002	CHROMIUM, HEXAVALENT (AS CR)				<5	<5
VA0003433	Hercules Incorporated - Franklin	10-Jan-13	10-Dec-12	002	CHROMIUM, HEXAVALENT (AS CR)				<5	<5
VA0003433	Hercules Incorporated - Franklin	10-Apr-13		002	CHROMIUM, HEXAVALENT (AS CR)					
VA0003433	Hercules Incorporated - Franklin	10-Jan-10	11-Jan-10	002	TEMPERATURE, WATER (DEG. C)				22	27
VA0003433	Hercules Incorporated - Franklin	10-Feb-10	10-Feb-10	002	TEMPERATURE, WATER (DEG. C)				22	25
VA0003433	Hercules Incorporated - Franklin	10-Mar-10	10-Mar-10	002	TEMPERATURE, WATER (DEG. C)				22	26
VA0003433	Hercules Incorporated - Franklin	10-Apr-10	12-Apr-10	002	TEMPERATURE, WATER (DEG. C)				26	27

VA0003433	Hercules Incorporated - Franklin	10-May-10	11-May-10	002	TEMPERATURE, WATER (DEG. C)				25	30
VA0003433	Hercules Incorporated - Franklin	10-Jun-10	9-Jun-10	002	TEMPERATURE, WATER (DEG. C)				25	29
VA0003433	Hercules Incorporated - Franklin	10-Jul-10	12-Jul-10	002	TEMPERATURE, WATER (DEG. C)				28	29
VA0003433	Hercules Incorporated - Franklin	10-Aug-10	10-Aug-10	002	TEMPERATURE, WATER (DEG. C)				29	30
VA0003433	Hercules Incorporated - Franklin	10-Sep-10	13-Sep-10	002	TEMPERATURE, WATER (DEG. C)				26	29
VA0003433	Hercules Incorporated - Franklin	10-Oct-10	12-Oct-10	002	TEMPERATURE, WATER (DEG. C)				24	26
VA0003433	Hercules Incorporated - Franklin	10-Nov-10	9-Nov-10	002	TEMPERATURE, WATER (DEG. C)				25	28
VA0003433	Hercules Incorporated - Franklin	10-Dec-10	9-Dec-10	002	TEMPERATURE, WATER (DEG. C)				26	28
VA0003433	Hercules Incorporated - Franklin	10-Jan-11	10-Jan-11	002	TEMPERATURE, WATER (DEG. C)				21	29
VA0003433	Hercules Incorporated - Franklin	10-Feb-11	9-Feb-11	002	TEMPERATURE, WATER (DEG. C)				25	28

VA0003433	Hercules Incorporated - Franklin	10-Mar-11	9-Mar-11	002	TEMPERATURE, WATER (DEG. C)				24	27
VA0003433	Hercules Incorporated - Franklin	10-Apr-11	8-Apr-11	002	TEMPERATURE, WATER (DEG. C)				23	25
VA0003433	Hercules Incorporated - Franklin	10-May-11	9-May-11	002	TEMPERATURE, WATER (DEG. C)				26	30
VA0003433	Hercules Incorporated - Franklin	10-Jun-11	8-Jun-11	002	TEMPERATURE, WATER (DEG. C)				25	26
VA0003433	Hercules Incorporated - Franklin	10-Jul-11	8-Jul-11	002	TEMPERATURE, WATER (DEG. C)				28	30
VA0003433	Hercules Incorporated - Franklin	10-Aug-11	9-Aug-11	002	TEMPERATURE, WATER (DEG. C)				28	30
VA0003433	Hercules Incorporated - Franklin	10-Sep-11	9-Sep-11	002	TEMPERATURE, WATER (DEG. C)				27	30
VA0003433	Hercules Incorporated - Franklin	10-Oct-11	6-Oct-11	002	TEMPERATURE, WATER (DEG. C)				30	30
VA0003433	Hercules Incorporated - Franklin	10-Nov-11	8-Nov-11	002	TEMPERATURE, WATER (DEG. C)				27	29
VA0003433	Hercules Incorporated - Franklin	10-Dec-11	8-Dec-11	002	TEMPERATURE, WATER (DEG. C)				28	32

VA0003433	Hercules Incorporated - Franklin	10-Jan-12	9-Jan-12	002	TEMPERATURE, WATER (DEG. C)				25	28
VA0003433	Hercules Incorporated - Franklin	10-Feb-12	7-Feb-12	002	TEMPERATURE, WATER (DEG. C)				26	28
VA0003433	Hercules Incorporated - Franklin	10-Mar-12	9-Mar-12	002	TEMPERATURE, WATER (DEG. C)				27	28
VA0003433	Hercules Incorporated - Franklin	10-Apr-12	6-Apr-12	002	TEMPERATURE, WATER (DEG. C)				23	28
VA0003433	Hercules Incorporated - Franklin	10-May-12	4-May-12	002	TEMPERATURE, WATER (DEG. C)				26	30
VA0003433	Hercules Incorporated - Franklin	10-Jun-12	8-Jun-12	002	TEMPERATURE, WATER (DEG. C)				27	30
VA0003433	Hercules Incorporated - Franklin	10-Jul-12	9-Jul-12	002	TEMPERATURE, WATER (DEG. C)				28	30
VA0003433	Hercules Incorporated - Franklin	10-Aug-12	9-Aug-12	002	TEMPERATURE, WATER (DEG. C)				28	30
VA0003433	Hercules Incorporated - Franklin	10-Sep-12	10-Sep-12	002	TEMPERATURE, WATER (DEG. C)				27	28
VA0003433	Hercules Incorporated - Franklin	10-Oct-12	9-Oct-12	002	TEMPERATURE, WATER (DEG. C)				26	30

VA0003433	Hercules Incorporated - Franklin	10-Nov-12	9-Nov-12	002	TEMPERATURE, WATER (DEG. C)				24	26
VA0003433	Hercules Incorporated - Franklin	10-Dec-12	10-Dec-12	002	TEMPERATURE, WATER (DEG. C)				25	26
VA0003433	Hercules Incorporated - Franklin	10-Jan-13	9-Jan-13	002	TEMPERATURE, WATER (DEG. C)				24	28
VA0003433	Hercules Incorporated - Franklin	10-Feb-13		002	TEMPERATURE, WATER (DEG. C)					
VA0003433	Hercules Incorporated - Franklin	10-Mar-13		002	TEMPERATURE, WATER (DEG. C)					
VA0003433	Hercules Incorporated - Franklin	10-Jan-10	11-Jan-10	002	HARDNESS, TOTAL (AS CACO3)				82.8	
VA0003433	Hercules Incorporated - Franklin	10-Feb-10	10-Feb-10	002	HARDNESS, TOTAL (AS CACO3)				70.3	
VA0003433	Hercules Incorporated - Franklin	10-Mar-10	10-Mar-10	002	HARDNESS, TOTAL (AS CACO3)				70.0	
VA0003433	Hercules Incorporated - Franklin	10-Apr-10	12-Apr-10	002	HARDNESS, TOTAL (AS CACO3)				78	
VA0003433	Hercules Incorporated - Franklin	10-May-10	11-May-10	002	HARDNESS, TOTAL (AS CACO3)				75	

VA0003433	Hercules Incorporated - Franklin	10-Jun-10	9-Jun-10	002	HARDNESS, TOTAL (AS CACO3)				70	
VA0003433	Hercules Incorporated - Franklin	10-Jul-10	12-Jul-10	002	HARDNESS, TOTAL (AS CACO3)				80	
VA0003433	Hercules Incorporated - Franklin	10-Aug-10	10-Aug-10	002	HARDNESS, TOTAL (AS CACO3)				112	
VA0003433	Hercules Incorporated - Franklin	10-Sep-10	13-Sep-10	002	HARDNESS, TOTAL (AS CACO3)				79	
VA0003433	Hercules Incorporated - Franklin	10-Oct-10	12-Oct-10	002	HARDNESS, TOTAL (AS CACO3)				66	
VA0003433	Hercules Incorporated - Franklin	10-Nov-10	9-Nov-10	002	HARDNESS, TOTAL (AS CACO3)				53	
VA0003433	Hercules Incorporated - Franklin	10-Dec-10	9-Dec-10	002	HARDNESS, TOTAL (AS CACO3)				80	
VA0003433	Hercules Incorporated - Franklin	10-Jan-11	10-Jan-11	002	HARDNESS, TOTAL (AS CACO3)				86	
VA0003433	Hercules Incorporated - Franklin	10-Feb-11	9-Feb-11	002	HARDNESS, TOTAL (AS CACO3)				12	
VA0003433	Hercules Incorporated - Franklin	10-Mar-11	9-Mar-11	002	HARDNESS, TOTAL (AS CACO3)				76	

VA0003433	Hercules Incorporated - Franklin	10-Apr-11	8-Apr-11	002	HARDNESS, TOTAL (AS CACO3)				62	
VA0003433	Hercules Incorporated - Franklin	10-May-11	9-May-11	002	HARDNESS, TOTAL (AS CACO3)				103	
VA0003433	Hercules Incorporated - Franklin	10-Jun-11	8-Jun-11	002	HARDNESS, TOTAL (AS CACO3)				99	
VA0003433	Hercules Incorporated - Franklin	10-Jul-11	8-Jul-11	002	HARDNESS, TOTAL (AS CACO3)				132	
VA0003433	Hercules Incorporated - Franklin	10-Aug-11	9-Aug-11	002	HARDNESS, TOTAL (AS CACO3)				97	
VA0003433	Hercules Incorporated - Franklin	10-Sep-11	9-Sep-11	002	HARDNESS, TOTAL (AS CACO3)				58	
VA0003433	Hercules Incorporated - Franklin	10-Oct-11	6-Oct-11	002	HARDNESS, TOTAL (AS CACO3)				54	
VA0003433	Hercules Incorporated - Franklin	10-Nov-11	8-Nov-11	002	HARDNESS, TOTAL (AS CACO3)				116	
VA0003433	Hercules Incorporated - Franklin	10-Dec-11	8-Dec-11	002	HARDNESS, TOTAL (AS CACO3)				66	
VA0003433	Hercules Incorporated - Franklin	10-Jan-12	9-Jan-12	002	HARDNESS, TOTAL (AS CACO3)				77	

VA0003433	Hercules Incorporated - Franklin	10-Feb-12	7-Feb-12	002	HARDNESS, TOTAL (AS CACO3)				130	
VA0003433	Hercules Incorporated - Franklin	10-Mar-12	9-Mar-12	002	HARDNESS, TOTAL (AS CACO3)				50	
VA0003433	Hercules Incorporated - Franklin	10-Apr-12	6-Apr-12	002	HARDNESS, TOTAL (AS CACO3)				73	
VA0003433	Hercules Incorporated - Franklin	10-May-12	4-May-12	002	HARDNESS, TOTAL (AS CACO3)				63	
VA0003433	Hercules Incorporated - Franklin	10-Jun-12	8-Jun-12	002	HARDNESS, TOTAL (AS CACO3)				70	
VA0003433	Hercules Incorporated - Franklin	10-Jul-12	9-Jul-12	002	HARDNESS, TOTAL (AS CACO3)				54	
VA0003433	Hercules Incorporated - Franklin	10-Aug-12	9-Aug-12	002	HARDNESS, TOTAL (AS CACO3)				152	
VA0003433	Hercules Incorporated - Franklin	10-Sep-12	10-Sep-12	002	HARDNESS, TOTAL (AS CACO3)				90	
VA0003433	Hercules Incorporated - Franklin	10-Oct-12	9-Oct-12	002	HARDNESS, TOTAL (AS CACO3)				149	
VA0003433	Hercules Incorporated - Franklin	10-Nov-12	9-Nov-12	002	HARDNESS, TOTAL (AS CACO3)				92	

VA0003433	Hercules Incorporated - Franklin	10-Dec-12	10-Dec-12	002	HARDNESS, TOTAL (AS CACO3)				68	
VA0003433	Hercules Incorporated - Franklin	10-Jan-13	9-Jan-13	002	HARDNESS, TOTAL (AS CACO3)				69	
VA0003433	Hercules Incorporated - Franklin	10-Feb-13		002	HARDNESS, TOTAL (AS CACO3)					
VA0003433	Hercules Incorporated - Franklin	10-Mar-13		002	HARDNESS, TOTAL (AS CACO3)					
VA0003433	Hercules Incorporated - Franklin	10-Jan-10	11-Jan-10	002	COPPER, TOTAL RECOVERABLE				7	7
VA0003433	Hercules Incorporated - Franklin	10-Feb-10	10-Feb-10	002	COPPER, TOTAL RECOVERABLE				3	3
VA0003433	Hercules Incorporated - Franklin	10-Mar-10	10-Mar-10	002	COPPER, TOTAL RECOVERABLE				2	2
VA0003433	Hercules Incorporated - Franklin	10-Apr-10	12-Apr-10	002	COPPER, TOTAL RECOVERABLE				<1	<1
VA0003433	Hercules Incorporated - Franklin	10-May-10	11-May-10	002	COPPER, TOTAL RECOVERABLE				4	4
VA0003433	Hercules Incorporated - Franklin	10-Jun-10	9-Jun-10	002	COPPER, TOTAL RECOVERABLE				2	2

VA0003433	Hercules Incorporated - Franklin	10-Jul-10	12-Jul-10	002	COPPER, TOTAL RECOVERABLE				2	2
VA0003433	Hercules Incorporated - Franklin	10-Aug-10	10-Aug-10	002	COPPER, TOTAL RECOVERABLE				<1	<1
VA0003433	Hercules Incorporated - Franklin.	10-Sep-10	13-Sep-10	002	COPPER, TOTAL RECOVERABLE				36	36
VA0003433	Hercules Incorporated - Franklin	10-Oct-10	12-Oct-10	002	COPPER, TOTAL RECOVERABLE				3	3
VA0003433	Hercules Incorporated - Franklin	10-Nov-10	9-Nov-10	002	COPPER, TOTAL RECOVERABLE				0.002	0.002
VA0003433	Hercules Incorporated - Franklin	10-Dec-10	9-Dec-10	002	COPPER, TOTAL RECOVERABLE				0.002	0.002
VA0003433	Hercules Incorporated - Franklin	10-Jan-11	10-Jan-11	002	COPPER, TOTAL RECOVERABLE				0.002	0.002
VA0003433	Hercules Incorporated - Franklin	10-Feb-11	9-Feb-11	002	COPPER, TOTAL RECOVERABLE				1	1
VA0003433	Hercules Incorporated - Franklin	10-Mar-11	9-Mar-11	002	COPPER, TOTAL RECOVERABLE				3	3
VA0003433	Hercules Incorporated - Franklin	10-Apr-11	8-Apr-11	002	COPPER, TOTAL RECOVERABLE				7	7

VA0003433	Hercules Incorporated - Franklin	10-May-11	9-May-11	002	COPPER, TOTAL RECOVERABLE				<1	<1
VA0003433	Hercules Incorporated - Franklin	10-Jun-11	8-Jun-11	002	COPPER, TOTAL RECOVERABLE				6	6
VA0003433	Hercules Incorporated - Franklin	10-Jul-11	8-Jul-11	002	COPPER, TOTAL RECOVERABLE				3	3
VA0003433	Hercules Incorporated - Franklin	10-Aug-11	9-Aug-11	002	COPPER, TOTAL RECOVERABLE				<10	<10
VA0003433	Hercules Incorporated - Franklin	10-Sep-11	9-Sep-11	002	COPPER, TOTAL RECOVERABLE				3	3
VA0003433	Hercules Incorporated - Franklin	10-Oct-11	6-Oct-11	002	COPPER, TOTAL RECOVERABLE				3	3
VA0003433	Hercules Incorporated - Franklin	10-Nov-11	8-Nov-11	002	COPPER, TOTAL RECOVERABLE				5	5
VA0003433	Hercules Incorporated - Franklin	10-Dec-11	8-Dec-11	002	COPPER, TOTAL RECOVERABLE				2	2
VA0003433	Hercules Incorporated - Franklin	10-Jan-12	9-Jan-12	002	COPPER, TOTAL RECOVERABLE				2	2
VA0003433	Hercules Incorporated - Franklin	10-Feb-12	7-Feb-12	002	COPPER, TOTAL RECOVERABLE				3	3

VA0003433	Hercules Incorporated - Franklin	10-Mar-12	9-Mar-12	002	COPPER, TOTAL RECOVERABLE				4	4
VA0003433	Hercules Incorporated - Franklin	10-Apr-12	6-Apr-12	002	COPPER, TOTAL RECOVERABLE				5	5
VA0003433	Hercules Incorporated - Franklin	10-May-12	4-May-12	002	COPPER, TOTAL RECOVERABLE				4	4
VA0003433	Hercules Incorporated - Franklin	10-Jun-12	8-Jun-12	002	COPPER, TOTAL RECOVERABLE				2	2
VA0003433	Hercules Incorporated - Franklin	10-Jul-12	9-Jul-12	002	COPPER, TOTAL RECOVERABLE				3	3
VA0003433	Hercules Incorporated - Franklin	10-Aug-12	9-Aug-12	002	COPPER, TOTAL RECOVERABLE				5	5
VA0003433	Hercules Incorporated - Franklin	10-Sep-12	10-Sep-12	002	COPPER, TOTAL RECOVERABLE				4	4
VA0003433	Hercules Incorporated - Franklin	10-Oct-12	9-Oct-12	002	COPPER, TOTAL RECOVERABLE				2	2
VA0003433	Hercules Incorporated - Franklin	10-Nov-12	9-Nov-12	002	COPPER, TOTAL RECOVERABLE				2	2
VA0003433	Hercules Incorporated - Franklin	10-Dec-12	10-Dec-12	002	COPPER, TOTAL RECOVERABLE				2	2

VA0003433	Hercules Incorporated - Franklin	10-Jan-13	9-Jan-13	002	COPPER, TOTAL RECOVERABLE				2	2
VA0003433	Hercules Incorporated - Franklin	10-Feb-13		002	COPPER, TOTAL RECOVERABLE					
VA0003433	Hercules Incorporated - Franklin	10-Mar-13		002	COPPER, TOTAL RECOVERABLE					
VA0003433	Hercules Incorporated - Franklin	10-Jan-10	12-Nov-09	002	TOXICITY, FINAL, ACUTE					<1.00
VA0003433	Hercules Incorporated - Franklin	10-Apr-10	10-Feb-10	002	TOXICITY, FINAL, ACUTE					<1
VA0003433	Hercules Incorporated - Franklin	10-Jul-10	11-May-10	002	TOXICITY, FINAL, ACUTE					<1.0
VA0003433	Hercules Incorporated - Franklin	10-Oct-10	10-Aug-10	002	TOXICITY, FINAL, ACUTE					<1.0
VA0003433	Hercules Incorporated - Franklin	10-Jan-11	9-Nov-10	002	TOXICITY, FINAL, ACUTE					<1.0
VA0003433	Hercules Incorporated - Franklin	10-Apr-11	9-Mar-11	002	TOXICITY, FINAL, ACUTE					<1.0
VA0003433	Hercules Incorporated - Franklin	10-Jul-11	8-Jul-11	002	TOXICITY, FINAL, ACUTE					<1.0

VA0003433	Hercules Incorporated - Franklin	10-Oct-11	9-Sep-11	002	TOXICITY, FINAL, ACUTE					<1.0
VA0003433	Hercules Incorporated - Franklin	10-Jan-12	8-Dec-11	002	TOXICITY, FINAL, ACUTE					<1.0
VA0003433	Hercules Incorporated - Franklin	10-Apr-12	9-Mar-12	002	TOXICITY, FINAL, ACUTE					<1.0
VA0003433	Hercules Incorporated - Franklin	10-Jul-12	8-Jun-12	002	TOXICITY, FINAL, ACUTE					<1.0
VA0003433	Hercules Incorporated - Franklin	10-Oct-12	10-Sep-12	002	TOXICITY, FINAL, ACUTE					1.0
VA0003433	Hercules Incorporated - Franklin	10-Jan-13	10-Dec-12	002	TOXICITY, FINAL, ACUTE					<1.0
VA0003433	Hercules Incorporated - Franklin	10-Apr-13		002	TOXICITY, FINAL, ACUTE					
VA0003433	Hercules Incorporated - Franklin	10-Jan-10	12-Nov-09	002	TOXICITY, FINAL, CHRONIC					6.25
VA0003433	Hercules Incorporated - Franklin	10-Apr-10	10-Feb-10	002	TOXICITY, FINAL, CHRONIC					1.72
VA0003433	Hercules Incorporated - Franklin	10-Jul-10	11-May-10	002	TOXICITY, FINAL, CHRONIC					12.5
VA0003433	Hercules Incorporated - Franklin	10-Oct-10	10-Aug-10	002	TOXICITY, FINAL, CHRONIC					6.25
VA0003433	Hercules Incorporated - Franklin	10-Jan-11	9-Nov-10	002	TOXICITY, FINAL, CHRONIC					6.25

VA0003433	Hercules Incorporated - Franklin	10-Apr-11	9-Mar-11	002	TOXICITY, FINAL, CHRONIC					6.25
VA0003433	Hercules Incorporated - Franklin	10-Jul-11	8-Jul-11	002	TOXICITY, FINAL, CHRONIC					6.25
VA0003433	Hercules Incorporated - Franklin	10-Oct-11	9-Sep-11	002	TOXICITY, FINAL, CHRONIC					1.00
VA0003433	Hercules Incorporated - Franklin	10-Jan-12	8-Dec-11	002	TOXICITY, FINAL, CHRONIC					6.25
VA0003433	Hercules Incorporated - Franklin	10-Apr-12	9-Mar-12	002	TOXICITY, FINAL, CHRONIC					6.25
VA0003433	Hercules Incorporated - Franklin	10-Jul-12	8-Jun-12	002	TOXICITY, FINAL, CHRONIC					6.25
VA0003433	Hercules Incorporated - Franklin	10-Oct-12	10-Sep-12	002	TOXICITY, FINAL, CHRONIC					6.25
VA0003433	Hercules Incorporated - Franklin	10-Jan-13	10-Dec-12	002	TOXICITY, FINAL, CHRONIC					6.25
VA0003433	Hercules Incorporated - Franklin	10-Apr-13		002	TOXICITY, FINAL, CHRONIC					

Permit No	Facility Nai	Due Date	Received D	Outfall No	Parameter	No Dischar	Parameter	QTYAVG	QTYMAX	CONCMIN	CONCAVG	CONCMAX
VA000343	Hercules Ir	10-Jan-09	11-Mar-08	003	002	N	PH			6.0		6.0
VA000343	Hercules Ir	10-Jan-09	11-Mar-08	003	004	N	TSS					57
VA000343	Hercules Ir	10-Jan-09	11-Mar-08	003	008	N	COD					24
VA000343	Hercules Ir	10-Jan-09	11-Mar-08	003	199	N	FLOW, PRECIPITATI	0.00346				
VA000343	Hercules Ir	10-Jan-09	11-Mar-08	003	257	N	PETROLEUM HYDROCARBONS, TOTAL RECOVERAE					<QL
VA000343	Hercules Ir	10-Jan-10	11-Dec-09	003	002	N	PH			6.89		6.89
VA000343	Hercules Ir	10-Jan-10	11-Dec-09	003	004	N	TSS					4.6
VA000343	Hercules Ir	10-Jan-10	11-Dec-09	003	008	N	COD					52
VA000343	Hercules Ir	10-Jan-10	11-Dec-09	003	199	N	FLOW, PRECIPITATI	0.0295				
VA000343	Hercules Ir	10-Jan-10	11-Dec-09	003	257	N	PETROLEUM HYDROCARBONS, TOTAL RECOVERAE					<QL
VA000343	Hercules Ir	10-Jan-11	10-Jan-11	003	002	N	PH			7.46		7.46
VA000343	Hercules Ir	10-Jan-11	10-Jan-11	003	004	N	TSS					4.5
VA000343	Hercules Ir	10-Jan-11	10-Jan-11	003	008	N	COD					57
VA000343	Hercules Ir	10-Jan-11	10-Jan-11	003	199	N	FLOW, PRECIPITATI	0.0024				
VA000343	Hercules Ir	10-Jan-11	10-Jan-11	003	257	N	PETROLEUM HYDROCARBONS, TOTAL RECOVERAE					<2.0
VA000343	Hercules Ir	10-Jan-12	8-Jun-11	003	002	N	PH			5.0		5.0
VA000343	Hercules Ir	10-Jan-12	8-Jun-11	003	004	N	TSS					20
VA000343	Hercules Ir	10-Jan-12	8-Jun-11	003	008	N	COD					81
VA000343	Hercules Ir	10-Jan-12	8-Jun-11	003	199	N	FLOW, PRECIPITATI	0.0002				
VA000343	Hercules Ir	10-Jan-12	8-Jun-11	003	257	N	PETROLEUM HYDROCARBONS, TOTAL RECOVERAE					10.6
VA000343	Hercules Ir	10-Jan-13	10-Dec-12	003	002	N	PH			7.9		7.9
VA000343	Hercules Ir	10-Jan-13	10-Dec-12	003	004	N	TSS					3
VA000343	Hercules Ir	10-Jan-13	10-Dec-12	003	008	N	COD					<10
VA000343	Hercules Ir	10-Jan-13	10-Dec-12	003	199	N	FLOW, PRECIPITATI	0.06				
VA000343	Hercules Ir	10-Jan-13	10-Dec-12	003	257	N	PETROLEUM HYDROCARBONS, TOTAL RECOVERAE					<0.5
VA000343	Hercules Ir	10-Jan-11	10-Jan-11	004	002	Y	PH					
VA000343	Hercules Ir	10-Jan-11	10-Jan-11	004	004	Y	TSS					
VA000343	Hercules Ir	10-Jan-11	10-Jan-11	004	008	Y	COD					
VA000343	Hercules Ir	10-Jan-11	10-Jan-11	004	199	Y	FLOW, PRECIPITATION EVENT					
VA000343	Hercules Ir	10-Jan-11	10-Jan-11	004	257	Y	PETROLEUM HYDROCARBONS, TOTAL RECOVERABLE					
VA000343	Hercules Ir	10-Jan-12	9-Jan-12	004	002	Y	PH					
VA000343	Hercules Ir	10-Jan-12	9-Jan-12	004	004	Y	TSS					
VA000343	Hercules Ir	10-Jan-12	9-Jan-12	004	008	Y	COD					
VA000343	Hercules Ir	10-Jan-12	9-Jan-12	004	199	Y	FLOW, PRECIPITATION EVENT					
VA000343	Hercules Ir	10-Jan-12	9-Jan-12	004	257	Y	PETROLEUM HYDROCARBONS, TOTAL RECOVERABLE					
VA000343	Hercules Ir	10-Jan-13	10-Dec-12	004	002	Y	PH					

VA000343:	Hercules Ir	10-Jan-13	10-Dec-12	004	004	Y	TSS	
VA000343:	Hercules Ir	10-Jan-13	10-Dec-12	004	008	Y	COD	
VA000343:	Hercules Ir	10-Jan-13	10-Dec-12	004	199	Y	FLOW, PRECIPITATION EVENT	
VA000343:	Hercules Ir	10-Jan-13	10-Dec-12	004	257	Y	PETROLEUM HYDROCARBONS, TOTAL RECOVERABLE	
VA000343:	Hercules Ir	10-Jan-11	10-Jan-11	005	002	Y	PH	
VA000343:	Hercules Ir	10-Jan-11	10-Jan-11	005	004	Y	TSS	
VA000343:	Hercules Ir	10-Jan-11	10-Jan-11	005	008	Y	COD	
VA000343:	Hercules Ir	10-Jan-11	10-Jan-11	005	199	Y	FLOW, PRECIPITATION EVENT	
VA000343:	Hercules Ir	10-Jan-11	10-Jan-11	005	257	Y	PETROLEUM HYDROCARBONS, TOTAL RECOVERABLE	
VA000343:	Hercules Ir	10-Jan-12	9-Jan-12	005	002	Y	PH	
VA000343:	Hercules Ir	10-Jan-12	9-Jan-12	005	004	Y	TSS	
VA000343:	Hercules Ir	10-Jan-12	9-Jan-12	005	008	Y	COD	
VA000343:	Hercules Ir	10-Jan-12	9-Jan-12	005	199	Y	FLOW, PRECIPITATION EVENT	
VA000343:	Hercules Ir	10-Jan-12	9-Jan-12	005	257	Y	PETROLEUM HYDROCARBONS, TOTAL RECOVERABLE	
VA000343:	Hercules Ir	10-Jan-13	10-Dec-12	005	002	Y	PH	
VA000343:	Hercules Ir	10-Jan-13	10-Dec-12	005	004	Y	TSS	
VA000343:	Hercules Ir	10-Jan-13	10-Dec-12	005	008	Y	COD	
VA000343:	Hercules Ir	10-Jan-13	10-Dec-12	005	199	Y	FLOW, PRECIPITATION EVENT	
VA000343:	Hercules Ir	10-Jan-13	10-Dec-12	005	257	Y	PETROLEUM HYDROCARBONS, TOTAL RECOVERABLE	
VA000343:	Hercules Ir	10-Jan-11	10-Jan-11	006	002	N	PH	6.00	6.00
VA000343:	Hercules Ir	10-Jan-11	10-Jan-11	006	004	N	TSS		19
VA000343:	Hercules Ir	10-Jan-11	10-Jan-11	006	008	N	COD		165
VA000343:	Hercules Ir	10-Jan-11	10-Jan-11	006	199	N	FLOW, PRECIPITATI	0.055	
VA000343:	Hercules Ir	10-Jan-11	10-Jan-11	006	257	N	PETROLEUM HYDROCARBONS, TOTAL RECOVERAE		<QL
VA000343:	Hercules Ir	10-Jan-12	8-Dec-11	006	002	N	PH	5.9	5.9
VA000343:	Hercules Ir	10-Jan-12	8-Dec-11	006	004	N	TSS		65
VA000343:	Hercules Ir	10-Jan-12	8-Dec-11	006	008	N	COD		172
VA000343:	Hercules Ir	10-Jan-12	8-Dec-11	006	199	N	FLOW, PRECIPITATI	0.16	
VA000343:	Hercules Ir	10-Jan-12	8-Dec-11	006	257	N	PETROLEUM HYDROCARBONS, TOTAL RECOVERAE		<0.5
VA000343:	Hercules Ir	10-Jan-13	10-Dec-12	006	002	N	PH	8.4	8.4
VA000343:	Hercules Ir	10-Jan-13	10-Dec-12	006	004	N	TSS		31
VA000343:	Hercules Ir	10-Jan-13	10-Dec-12	006	008	N	COD		132
VA000343:	Hercules Ir	10-Jan-13	10-Dec-12	006	199	N	FLOW, PRECIPITATI	0.03	
VA000343:	Hercules Ir	10-Jan-13	10-Dec-12	006	257	N	PETROLEUM HYDROCARBONS, TOTAL RECOVERAE		<0.5
VA000343:	Hercules Ir	10-Jan-09	11-Mar-08	902	002	N	PH	7.0	7.0
VA000343:	Hercules Ir	10-Jan-09	11-Mar-08	902	003	N	BOD5		>610
VA000343:	Hercules Ir	10-Jan-09	11-Mar-08	902	004	N	TSS		54

VA000343:	Hercules Ir	10-Jan-09	11-Mar-08	902	008	N	COD		65
VA000343:	Hercules Ir	10-Jan-09	11-Mar-08	902	199	N	FLOW, PRECIPITATI(	0.5016	
VA000343:	Hercules Ir	10-Jan-09	11-Mar-08	902	257	N	PETROLEUM HYDROCARBONS, TOTAL RECOVERAE		<QL
VA000343:	Hercules Ir	10-Jan-10	11-Jan-10	902	002	N	PH	7.72	7.72
VA000343:	Hercules Ir	10-Jan-10	11-Jan-10	902	003	N	BOD5		5
VA000343:	Hercules Ir	10-Jan-10	11-Jan-10	902	004	N	TSS		2.3
VA000343:	Hercules Ir	10-Jan-10	11-Jan-10	902	008	N	COD		51
VA000343:	Hercules Ir	10-Jan-10	11-Jan-10	902	199	N	FLOW, PRECIPITATI(	1.67	
VA000343:	Hercules Ir	10-Jan-10	11-Jan-10	902	257	N	PETROLEUM HYDROCARBONS, TOTAL RECOVERAE		<QL
VA000343:	Hercules Ir	10-Jan-11	10-Jan-11	902	002	N	PH	7.00	7.00
VA000343:	Hercules Ir	10-Jan-11	10-Jan-11	902	003	N	BOD5		<2.0
VA000343:	Hercules Ir	10-Jan-11	10-Jan-11	902	004	N	TSS		3.2
VA000343:	Hercules Ir	10-Jan-11	10-Jan-11	902	008	N	COD		55
VA000343:	Hercules Ir	10-Jan-11	10-Jan-11	902	199	N	FLOW, PRECIPITATI(	3.66	
VA000343:	Hercules Ir	10-Jan-11	10-Jan-11	902	257	N	PETROLEUM HYDROCARBONS, TOTAL RECOVERAE		<QL
VA000343:	Hercules Ir	10-Jan-12	8-Jun-11	902	002	N	PH	7.0	7.0
VA000343:	Hercules Ir	10-Jan-12	8-Jun-11	902	003	N	BOD5		6
VA000343:	Hercules Ir	10-Jan-12	8-Jun-11	902	004	N	TSS		17
VA000343:	Hercules Ir	10-Jan-12	8-Jun-11	902	008	N	COD		77
VA000343:	Hercules Ir	10-Jan-12	8-Jun-11	902	199	N	FLOW, PRECIPITATI(	2.26	
VA000343:	Hercules Ir	10-Jan-12	8-Jun-11	902	257	N	PETROLEUM HYDROCARBONS, TOTAL RECOVERAE		0.6
VA000343:	Hercules Ir	10-Jan-13	10-Dec-12	902	002	N	PH	8.1	8.1
VA000343:	Hercules Ir	10-Jan-13	10-Dec-12	902	003	N	BOD5		<3
VA000343:	Hercules Ir	10-Jan-13	10-Dec-12	902	004	N	TSS		4
VA000343:	Hercules Ir	10-Jan-13	10-Dec-12	902	008	N	COD		10
VA000343:	Hercules Ir	10-Jan-13	10-Dec-12	902	199	N	FLOW, PRECIPITATI(	3.33	
VA000343:	Hercules Ir	10-Jan-13	10-Dec-12	902	257	N	PETROLEUM HYDROCARBONS, TOTAL RECOVERAE		<0.5

subject to the provisions of this paragraph after application of the best practicable control technology currently available:

[Metric units, kg/kkg of product; English units, lb/1,000 lb of product]

Effluent characteristic	Effluent limitations	
	Maximum for any 1 day	Average of daily values for 30 consecutive days shall not exceed—
BOD5	1.42	0.755
TSS	0.077	0.026
pH	(1)	(1)

1 Within the range 6.0 to 9.0.

[41 FR 20511, May 18, 1976, as amended at 60 FR 33970, June 29, 1995]

Subpart C—Wood Rosin, Turpentine and Pine Oil Subcategory

§ 454.30 Applicability; description of the manufacture of wood rosin, turpentine and pine oil subcategory.

The provisions of this subpart are applicable to discharges resulting from the manufacture of wood rosin, turpentine and pine oil subcategory.

§ 454.31 Specialized definitions.

For the purpose of this subpart:

(a) Except as provided below, the general definitions, abbreviations and methods of analysis set forth in 40 CFR part 401 shall apply to this subpart.

(b) The term "product" shall mean products from wood rosin, turpentine and pine oil.

§ 454.32 Effluent limitations and guidelines representing the degree of effluent reduction attainable by the application of the best practicable control technology currently available.

Except as provided in §§ 125.30 through 125.32, any existing point source subject to this subpart shall achieve the following effluent limitations representing the degree of effluent reduction attainable by the application of the best practicable control technology currently available (BPT):

(a) The following limitations establish the quantity or quality of pollutants or pollutant properties, controlled by this paragraph, which may be discharged from the manufacture of wood rosin, turpentine and pine oil by a point source subject to the provisions of this paragraph after application of the best practicable control technology currently available:

[Metric units, kg/kkg of product; English units, lb/1,000 lb of product]

Effluent characteristic	Effluent limitations	
	Maximum for any 1 day	Average of daily values for 30 consecutive days shall not exceed—
BOD5	2.08	1.10
TSS	1.38	0.475
pH	(1)	(1)

1 Within the range 6.0 to 9.0.

[41 FR 20511, May 18, 1976, as amended at 60 FR 33970, June 29, 1995]

Subpart D—Tall Oil Rosin, Pitch and Fatty Acids Subcategory

§ 454.40 Applicability; description of manufacture of tall oil rosin, pitch and fatty acids subcategory.

The provisions of this subpart are applicable to discharges resulting from the manufacture of tall oil rosin, pitch and fatty acids.

§ 454.41 Specialized definitions.

For the purpose of this subpart:

(a) Except as provided below, the general definitions, abbreviations and methods of analysis set forth in 40 CFR part 401 shall apply to this subpart.

(b) The term "product" shall mean tall oil rosin, pitch and fatty acids.

§ 454.42 Effluent limitations and guidelines representing the degree of effluent reduction attainable by the application of the best practicable control technology currently available.

Except as provided in §§ 125.30 through 125.32, any existing point source subject to this subpart shall achieve the following effluent limitations representing the degree of effluent reduction attainable by the application of the best practicable control technology currently available (BPT):

(a) The following limitations establish the quantity or quality of pollutants or pollutant properties, controlled

by this paragraph, which may be discharged from the manufacture of tall oil rosin, pitch and fatty acids by a point source subject to the provisions of this paragraph after application of the best practicable control technology currently available:

[Metric units, kg/kkg of product; English units, lb/1,000 lb of product]

Effluent characteristic	Effluent limitations	
	Maximum for any 1 day	Average of daily values for 30 consecutive days shall not exceed—
BOD5	0.995	0.529
TSS	0.705	0.243
pH	(1)	(1)

1 Within the range 6.0 to 9.0.

[41 FR 20511, May 18, 1976, as amended at 60 FR 33971, June 29, 1995]

Subpart E—Essential Oils Subcategory

§ 454.50 Applicability; description of the essential oils subcategory.

The provisions of this subpart are applicable to discharges resulting from the manufacture of essential oils.

§ 454.51 Specialized definitions.

For the purpose of this subpart:

(a) Except as provided below, the general definitions, abbreviations and methods of analysis set forth in 40 CFR part 401 shall apply to this subpart.

(b) The term "product" shall mean essential oils.

§ 454.52 Effluent limitations and guidelines representing the degree of effluent reduction attainable by the application of the best practicable control technology currently available.

Except as provided in §§ 125.30 through 125.32, any existing point source subject to this subpart shall achieve the following effluent limitations representing the degree of effluent reduction attainable by the application of the best practicable control technology currently available (BPT):

(a) The following limitations establish the quantity or quality of pollutants or pollutant properties, controlled by this paragraph, which may be discharged from the manufacture of essential oils by a point source subject to the provisions of this paragraph after application of the best practicable control technology currently available:

[Metric units, kg/kkg of product; English units, lb/1,000 lb of product]

Effluent characteristic	Effluent limitations	
	Maximum for any 1 day	Average of daily values for 30 consecutive days shall not exceed—
BOD5	22.7	12.0
TSS	9.01	3.11
pH	(1)	(1)

1 Within the range 6.0 to 9.0.

[41 FR 20511, May 18, 1976, as amended at 60 FR 33971, June 29, 1995]

Subpart F—Rosin-Based Derivatives Subcategory

§ 454.60 Applicability; description of manufacture of rosin-based derivatives subcategory.

The provisions of this subpart are applicable to discharges resulting from the manufacture of rosin-based derivatives.

§ 454.61 Specialized definitions.

For the purpose of this subpart:

(a) Except as provided below, the general definitions, abbreviations and methods of analysis set forth in 40 CFR part 401 shall apply to this subpart.

(b) The term "product" shall mean rosin-based derivatives.

§ 454.62 Effluent limitations and guidelines representing the degree of effluent reduction attainable by the application of the best practicable control technology currently available.

Except as provided in §§ 125.30 through 125.32, any existing point source subject to this subpart shall achieve the following effluent limitations representing the degree of effluent reduction attainable by the application of the best practicable control technology currently available (BPT):

(a) The following limitations establish the quantity or quality of pollutants or pollutant properties, controlled by this paragraph, which may be discharged from the manufacture of rosin-based derivatives by a point source

Arrowhead Environmental Services
P.O. Box 217
Windsor, VA 23487

(757) 242-3174 Facsimile
www.arrowheadenvironmental.com

April 20, 2009

Mr. Mark Sauer
Virginia Department of Environmental Quality
5636 Southern Boulevard
Virginia Beach, VA 23462

Re: VPDES Permit Renewal
Ashland Hercules Water Technologies
Franklin, Virginia
VA0003433

Dear Mr. Sauer,

The purpose of this letter is to request that the Aquapel effluent limit guidelines subcategory for the Ashland Hercules Water Technologies Virginia Pollution Discharge Elimination System (VPDES) permit for the facility in Franklin, Virginia be revised to more accurately reflect the manufacturing process. As we discussed in our December 17, 2008 meeting, a review of the Development Document for Proposed Effluent Limitations Guidelines, New Source Performance Standards, and Pretreatment Standards for the Gum and Wood Chemicals Point Source Category (December 1979) has lead to this request. A copy of pertinent pages from the development document is attached to this request.

The Aquapel process involves the following general steps.

1. Batch reaction of fatty acid (animal, vegetable or wood based) via chlorination to produce fatty acid chloride and co-products of hydrochloric acid and phosphorous acid.
2. Extraction in a series of tanks of the co-product acids from the fatty acid chloride to produce a purified fatty acid chloride.
3. The purified fatty acid chloride is reacted in a second series of reactors with triethylamine (TEA) using propylene dichloride (PDC) as a solvent to produce the raw product of alkyl ketene dimer (Aquapel).
4. The raw product is purified via a centrifuge and series of stills (multi-stage distillation). Once distilled, the dimer is sent to packaging as a final product.
5. The co-product acids are purified via separation and filtration and sold as reusable products. A portion of the hydrochloric acid is used for neutralization of caustic wastewaters from the solvent recovery process.
6. The TEA and PDC mixture is sent to solvent recovery which is a batch distillation process with condensers and separation equipment to recovery the materials for reuse in the process. A portion of the condensed solvent is refluxed back to the distillation columns.

A copy of the flow diagram for Aquapel is attached. A majority of the wastewater produced in Aquapel is from the solvent recovery process.

The current effluent limit guidelines subcategory for the Aquapel process is Subpart F – Rosin Based Derivatives. As can be seen in the attached Development Document, the rosin derivative process is produced when stump wood rosin and glycerin are reacted under vacuum conditions followed by a steam sparge to remove impurities. The impurities are sent through a scrubber and wastewater is produced from the separator after the scrubber. Additional wastewater is also produced from vessel wash down. A description of this process is presented on Page 37 and the flow diagram is presented in Figure III-5 (Page 38) of the attached Development Document.

The Aquapel process is different from the Rosin Based Derivatives process for the following reasons.

1. The Rosin Based Derivatives process does not have any solvent recovery distillation process (as outlined in item 6 above).
2. There is no raw production purification in the Rosin Based Derivatives process (as outlined in item 4 above).
3. The Rosin Based Derivatives process consists of a two step process which is a very simple process as outlined in the Development Document. The Aquapel process is more complicated and contains many more processes to produce the final product.
4. As mentioned previously, the majority of wastewater produced by Aquapel is from the solvent recovery process, which is not present in the Rosin Based Derivatives process.

Because the Rosin Based Derivatives process is not similar to Aquapel, the Development Document was reviewed to select the process most representative of the Aquapel process. The Wood Rosin, Turpentine and Pine Oil process (Subpart C) was selected as being most similar to the Aquapel process. The detailed description of this process is presented on Pages 30 and 33 and the flow diagram is presented in Figure III-2 (Page 32) of the Development Document. In this process, pine stumps are washed and chipped. The chips are then put through an azeotropic distillation process to remove water, reacted with a solvent to extract the resinous material and purified through distillation columns to separate the solvent from the final product. The solvent is then sent through a solvent recovery process to be reused.

The Wood Rosin, Turpentine and Pine Oil process (Subpart C) is most similar to Aquapel for the following reasons.

1. There is solvent extraction, recovery and reuse in both processes. The solvent recovery process is the major producer of wastewater in Aquapel.
2. Both solvent recovery processes are azeotropic distillation with like solvents.
3. Both processes use the same distillation approach to recover solvent downstream of the condenser with separation equipment and reflux a portion of the condensed solvent back into the distillation process.

4. The wood based fatty acid used as a raw material in Aquapel is similar to the rosin extracted from the stumps in the first stages of the Wood Rosin, Turpentine and Pine Oil process. Because they have similar physical properties they will behave similar in the wastewater stream.

Therefore, because the Aquapel process is not similar to the Subpart F – Rosin Based Derivatives process and is similar to the Subpart C – Wood Rosin, Turpentine and Pine Oil process, this request is for the Aquapel process to be subject to Subpart C – Wood Rosin, Turpentine and Pine Oil effluent limitations which are as follows.

Effluent Characteristic	Effluent Limitations	
	Maximum for any 1 day (lb/1000 lb of product)	Average of daily values for 30 consecutive days shall not exceed (lb/1000 lb of product)
BOD_5	2.08	1.10
TSS	1.38	0.475
pH	6.0 to 9.0	6.0 to 9.0

Anti-Backsliding Evaluation

In 9 VAC-25-31-220.L.2 the regulations allow for permits to be reissued with less stringent effluent limitations as long as certain exceptions are met. This evaluation meets the exception requirements for the following two reasons.

1. b(1) - "Information is available which was not available at the time of permit issuance (other than revised regulations, guidance, or test methods) and which would have justified the application of a less stringent effluent limitation at the time of permit issuance". The new information that is available is the detailed process information provided in this letter.
2. In the 1996 to 1998 timeframe there was a major modification of the Aquapel process to improve the quality of the final product. The multi-stage product distillation and improved solvent recovery processes were added. Therefore exception a. "Material and substantial alterations or additions to the permitted facility occurred after the permit issuance which justify the application of a less stringent effluent limitation" applies.

Using the information presented in this letter, Ashland Hercules Water Technologies is respectfully requesting a change in the effluent limits for the Aquapel process to the Subpart C – Wood Rosin, Turpentine and Pine Oil category. We are available to provide further information and clarification, if necessary.

We appreciate your consideration of this request for revised effluent limits. Please let me know if you have any questions (804-514-6365).

Sincerely,

Catherine C. Warner, P.E., D.E.E.

Attachments: Development Document for Proposed Effluent Limitations Guidelines, New Source Performance Standards, and Pretreatment Standards for the Gum and Wood Chemicals Point Source Category (December 1979)

Aquapel Process Flow Diagram – Confidential Business Information

cc: Sean Maconaghy – Ashland Hercules Water Technologies

DEVELOPMENT DOCUMENT

for

PROPOSED EFFLUENT LIMITATIONS GUIDELINES, NEW SOURCE PERFORMANCE STANDARDS, AND PRETREATMENT STANDARDS

for the

GUM AND WOOD CHEMICALS POINT SOURCE CATEGORY

Douglas M. Costle
Administrator

Robert B. Schaffer
Director, Effluent Guidelines Division

John E. Riley
Chief, Wood Products and Fibers Branch

William Thomson II, P.E.
Project Officer

December, 1979

Effluent Guidelines Division
Office of Water and Waste Management
U.S. Environmental Protection Agency
Washington, D.C. 20460

TABLE OF CONTENTS

Section		Page
I	CONCLUSIONS	1
II	RECOMMENDATIONS	9
	GENERAL	9
	EFFLUENT LIMITATIONS GUIDELINES	9
III	INTRODUCTION	17
	AUTHORITY	17
	PURPOSE AND SCOPE	17
	GENERAL DESCRIPTION OF INDUSTRY	18
	SUMMARY OF METHODOLOGY	19
	DATA AND INFORMATION GATHERING PROGRAM	20
	308 Data Collection Portfolio	21
	Plant Visits	22
	Raw Materials Review	22
	Screening Sampling	23
	Verification Program	23
	Processing of Information	24
	PROFILE OF INDUSTRY	25
	Char and Charcoal Briquets	25
	Gum Rosin and Turpentine	26
	Wood Rosin, Turpentine, and Pine Oil	26
	Tall Oil Rosin, Fatty Acids, and Pitch	26
	Essential Oils	27
	Rosin-Based Derivatives	27
	Sulfate Turpentine	28
	DESCRIPTIONS OF PROCESSES	28
	Char and Charcoal Briquets	28
	Gum Rosin and Turpentine	29
	Wood Rosin, Turpentine, and Pine Oil	29
	Tall Oil Rosin, Fatty Acids, and Pitch	32
	Essential Oils	34
	Rosin Derivatives	36
	Sulfate Turpentine	36

IV INDUSTRIAL SUBCATEGORIZATION 41

SUBCATEGORIZATION REVIEW 41

Manufacturing Process 42
Plant Location and Climate 42
Raw Materials 45
Plant Age 45
Plant Size and Flows 46
Product 46
Wastewater Characteristics and Treatability 46

POTENTIAL SUBCATEGORIES 47

V WASTEWATER CHARACTERISTICS 49
GENERAL 49

Exclusion Under Paragraph 8 49
Wood Rosin, Turpentine, and Pine Oil 49
Tall Oil Rosin, Pitch, and Fatty Acids 52
Sulfate Turpentine 55
Rosin Derivatives 62

VI SELECTION OF POLLUTANT PARAMETERS 64

WASTEWATER PARAMETERS OF SIGNIFICANCE 65

CONVENTIONAL AND NONCONVENTIONAL POLLUTANT PARAMETERS 65

BOD 65
TSS 66
pH 67

TOXIC POLLUTANTS 68

Organic Toxic Pollutants 68
Volatile Fraction 68
Semi-Volatile Fraction 75
Acidic Fraction 76

Inorganic Toxic Pollutants 77

VII CONTROL AND TREATMENT TECHNOLOGY 81

GENERAL 81
IN-PLANT CONTROL MEASURES 81

Wood Rosin, Turpentine, and Pine Oil 81

Tall Oil Rosin, Pitch, and Fatty Acids 82
End-of-Pipe Treatment 85
In-Place Treatment Technology--BPT 92

VIII COST, ENERGY, AND NON-WATER QUALITY ASPECTS 97

COST INFORMATION 97

Energy Requirements of Candidate Technologies 98
Total Cost of Candidate Technologies 98
Cost of Compliance for Individual Plants 98

NON-WATER QUALITY IMPACTS OF CANDIDATE TECHNOLOGIES 98

IX EFFLUENT REDUCTION ATTAINABLE THROUGH THE APPLICATION OF THE BEST PRACTICABLE CONTROL TECHNOLOGY CURRENTLY AVAILABLE--EFFLUENT LIMITATIONS GUIDELINES 139

GENERAL 139

Age and Size of Equipment and Facilities 140

BEST PRACTICABLE TECHNOLOGY 140

X EFFLUENT REDUCTION ATTAINABLE THROUGH THE APPLICATION OF THE BEST AVAILABLE TECHNOLOGY ECONOMICALLY ACHIEVABLE--EFFLUENT LIMITATIONS GUIDELINES 145

INTRODUCTION 145
IDENTIFICATION OF THE BEST AVAILABLE TECHNOLOGY ECONOMICALLY ACHIEVABLE 146

Metals Removal 146

DEVELOPMENT OF BAT EFFLUENT LIMITATIONS 146
REGULATED POLLUTANTS 147
SIZE, AGE, PROCESSES EMPLOYED, LOCATION OF FACILITIES 147
TOTAL COST OF APPLICATION 147
ENGINEERING ASPECTS OF BEST AVAILABLE TECHNOLOGY ECONOMICALLY ACHIEVABLE 148

Process Changes 148

NON-WATER QUALITY ENVIRONMENTAL IMPACT 148

XI EFFLUENT REDUCTION ATTAINABLE BY BEST CONVENTIONAL POLLUTANT CONTROL TECHNOLOGY 151

XII NEW SOURCE PERFORMANCE STANDARDS 155

XIII PRETREATMENT GUIDELINES 159

INTRODUCTION 159
PRETREATMENT STANDARDS FOR EXISTING SOURCES 160

Pretreatment Technology 160

RATIONALE FOR THE PRETREATMENT STANDARD REGULATED POLLUTANTS 161
SIZE, AGE, PROCESSES EMPLOYED, LOCATION OF FACILITIES 162
TOTAL COST OF APPLICATION 162
ENGINEERING ASPECTS OF PRETREATMENT TECHNOLOGY AND RELATIONSHIP TO PUBLICLY-OWNED TREATMENT WORKS 162

IN-PLANT CHANGES 163
PRETREATMENT STANDARDS FOR NEW SOURCESS 165
RATIONALE FOR THE PRETREATMENT STANDARD 165
NON-WATER QUALITY ENVIRONMENTAL IMPACT 165

XIV PERFORMANCE FACTORS FOR TREATMENT PLANT OPERATIONS 167

PURPOSE 167
FACTORS WHICH INFLUENCE VARIATIONS IN PERFORMANCE OF WASTEWATER TREATMENT FACILITIES 167

Temperature 167
Shock Loading 167
System Stabilization 168
System Operation 168
Nutrient Requirements 168
System Controllability 168

XV ACKNOWLEDGEMENTS 169

XVI BIBLIOGRAPHY 171

XVII GLOSSARY OF TERMS AND ABBREVIATIONS 183

APPENDIX A LIST OF TOXIC POLLUTANTS 195

APPENDIX B SAMPLE 308 DATA COLLECTION PORTFOLIO 203

APPENDIX C RECOMMENDED PARAGRAPH 8 EXCLUSION UNDER THE NRDC SETTLEMENT AGREEMENT 217

APPENDIX D ANALYTICAL METHODS AND EXPERIMENTAL PROCEDURE 225

APPENDIX E CONVERSION TABLE 245

LIST OF TABLES

Table		Page
I-1	Summary Tables	3
II-1	BPT Effluent Limitations Guidelines	11
II-2	BCT Effluent Limitations Guidelines	12
II-3	BAT Effluent Limitations Guidelines	13
II-4	New Source Performance Standards	14
II-5	Pretreatment Standards for New Sources	15
II-6	Pretreatment Standards for Existing Sources	16
III-1	List of Plants	22
IV-1	Tabulated Wastewater Flows by Plant	48
V-1	Sample Analysis, Plant 464	50
V-1A	Sample Numbers, Plant 464	51
V-2	Sample Analysis, Plant 949	53
V-2A	Sample Numbers, Plant 949	54
V-3	Sample Analysis, Plant 337	56
V-3A	Sample Numbers, Plant 337	57
V-4	Sample Analysis, Plant 610	58
V-4A	Sample Numbers, Plant 610	59
V-5	Sample Analysis, Plant 065--Turpene Sump	60
V-5A	Sample Numbers, Plant 065	61
V-6	Sample Analysis, Plant 097--Rosin Derivatives Process	63
V-6A	Sample Numbers, Plant 097	64
VI-1	Screening Sample Results for Halomethanes	69
VI-2	Screening Sample Results for Aromatic Solvents	70

VI-3	Toxic Pollutants Detected (Organics)	71
VI-4	Toxic Pollutants Detected (Metals)	73
VII-1	Plant 476--Comparison of Raw Wastewater and "Oily Water" Cooling System	84
VII-2	Secondary Treatment Feed and Effluent Analysis and Performance Data	90
VII-3	Typical Total Treatment System Performance Data	91
VII-4	Plant 976--Pollutant Reduction Across Fly Ash Slurry	94
VII-5	Treatment Scheme	95
VIII-1	Cost Assumptions	100
VIII-2	Gum and Wood Candidate Treatment Technologies--Indirect Discharge	101
VIII-3	Gum and Wood Candidate Treatment Technologies--Direct Discharge	101
VIII-4	Tall Oil Rosin, Fatty Acid, and Pitch Producing Plants--Model Plant Design Criteria	102
VIII-5	Tall Oil Rosin, Fatty Acid, Pitch, and Rosin Based Derivatives Producing Plant--Model Plant Design Criteria	102
VIII-6	Sulfate Turpentine Producing Plants--Model Plant Design Criteria	103
VIII-7	Sulfate Turpentine and Rosin Based Derivatives Producing Plants--Model Plant Design Criteria	104
VIII-8	Tall Oil Rosin, Fatty Acids, and Pitch Producing Plants	105
VIII-9	Tall Oil Rosin, Fatty Acids, and Pitch Producing Plants	106
VIII-10	Tall Oil Rosin, Fatty Acids, and Pitch and Rosin Based Derivatives	107
VIII-11	Tall Oil Rosin, Fatty Acids, and Pitch and Rosin Based Derivatives	108

VIII-12	Tall Oil Rosin, Fatty Acids, and Pitch and Rosin Based Derivatives	109
VIII-13	Tall Oil Rosin, Fatty Acids, and Pitch and Rosin Based Derivatives	110
VIII-14	Tall Oil Rosin, Fatty Acids, and Pitch and Rosin Derivatives	111
VIII-15	Tall Oil Rosin, Fatty Acids, and Pitch and Rosin Based Derivatives Producing Plants	111
VIII-16	Sulfate Turpentine	112
VIII-17	Sulfate Turpentine	113
VIII-18	Sulfate Turpentine	113
VIII-19	Sulfate Turpentine	114
VIII-20	Sulfate Turpentine	114
VIII-21	Sulfate Turpentine	115
VIII-22	Tall Oil Rosin, Fatty Acids, and Pitch; Rosin Based Derivatives; and Sulfate Turpentine	116
VIII-23	Tall Oil Rosin, Fatty Acids, and Pitch; Rosin Based Derivatives; and Sulfate Turpentine	117
VIII-24	Tall Oil Rosin, Fatty Acids, and Pitch; Rosin Based Derivatives; and Sulfate Turpentine	118
VIII-25	Tall Oil Rosin, Fatty Acids, and Pitch; Rosin Based Derivatives; and Sulfate Turpentine	119
VIII-26	Tall Oil Rosin, Fatty Acids, and Pitch; Rosin Based Derivatives; and Sulfate Turpentine	120
VIII-27	Tall Oil Rosin, Fatty Acids, and Pitch; Rosin Based Derivatives; and Sulfate Turpentine	121
VIII-28	Treatment Option for Plant 151	122
VIII-29	Treatment Option for Plant 151	123
VIII-30	Treatment Option for Plant 090	124

VIII-31	Treatment Option for Plant 090	125
VIII-32	Treatment Option for Plant 686	126
VIII-33	Treatment Option for Plant 686	127
VIII-34	Treatment Option for Plant 698	128
VIII-35	Treatment Option for Plant 948	129
VIII-36	Treatment Option for Plant 416	130
VIII-37	Treatment Option for Plant 333	131
VIII-38	Treatment Option for Plant 121	132
VIII-39	Treatment Option for Plant 087	133
VIII-40	Treatment Option for Plant 087	134
VIII-41	Treatment Option for Plant 266	135
VIII-42	Treatment Option for Plant 800	136
VIII-43	Treatment Option for Plant 606	137
VIII-44	Treatment Option for Plant 693	138
IX-1	Review of Individual Plants	142
IX-2	BPT Effluent Limitations Guidelines	143
IX-3	BPT Effluent Limitations Guidelines (Sulfate Turpentine)	144
X-1	BAT Effluent Limitations Guidelines	149
XI-1	BCT Effluent Limitations Guidelines	152
XII-1	NSPS Effluent Limitations Guidelines	156
XIII-1	PSES Effluent Limitations Guidelines	164
XIII-2	PSNS Effluent Limitations Guidelines	166

LIST OF FIGURES

Figure		Page
III-1	Gum Rosin and Turpentine Production	31
III-2	Wood Rosin, Pine Oil, and Turpentine Via Solvent Extraction	32
III-3	Crude Tall Oil Fractionation and Refining	34
III-4	Distillation and Refining of Essential Oils	36
III-5	Rosin Derivatives Manufacture	38
III-6	Basic Process Flow Turpentine Distillation	39
IV-1	Location of Naval Stores Plants	43
IV-2	Location of Charcoal Plants	44
VII-1	Stump Wash Water Treatment System--Plant 687	83
VII-2	Solubility Curves for Chromium, Copper, Nickel, and Zinc	88

SECTION I

CONCLUSIONS

The Gum and Wood Chemicals manufacturing point source category encompasses seven industrial segments. This document provides background information and the technical data base used in the review of effluent limitations guidelines for the Gum and Wood Chemicals point source category. Technologies are defined as best practicable control technology currently available (BPT), best conventional pollutant technology (BCT), best available technology economically achievable (BAT), and pretreatment standards (PSES and PSNS).

The rationale for the exclusion of three subcategories from regulation is given in accordance with the provisions of Paragraph 8 of the Settlement Agreement in Natural Resources Defense Council, et. al. v. Train (June 8, 1976).

The Agency has extensively sampled the remaining four subcategories (50 percent of the plants were sampled in the verification phase) for the presence or absence of the 129 toxic pollutants listed in Appendix A. Many of the toxic pollutants found in the raw wastes and treated effluents originate in specific process-related raw materials and chemicals used in the manufacturing process. In the case of certain pollutants found in widely varying amounts or with erratic frequencies of occurrence, the precise sources generally remain unknown, but are not suspected to be process-related.

The rationale by which the Agency then developed effluent limitations guidelines based on each technology level is presented. A review of the previously promulgated BPT limitations demonstrated that the industry can meet the limitations with the BPT or equivalent biological technologies in use. The BPT rationale was then used to derive the BPT effluent limitations guidelines for the Sulfate Turpentine subcategory.

Based on data from the sampling program, it appears that BPT or equivalent biological treatment (including oil/water separation, activated sludge or aerated lagoons treatment, and polishing ponds) provides effective control for the organic toxic pollutants. The data available indicate that after the application of BPT technology, the organic toxic pollutants decrease to levels equal to or less than 0.2 mg/l.

Two of the subcategories, Rosin-Based Derivatives and Sulfate Turpentine, employ modification of intermediates by metallic catalysts. These catalysts - copper and nickel in sulfate turpentine and zinc in rosin-based derivatives - were detected in the effluent at a number of the plants. Therefore, for these two subcategories, EPA

proposes BAT numerical effluent limitations guidelines to limit these metallic toxic pollutants. The remaining two subcategories--Wood Rosin, Turpentine, and Pine Oil and Tall Oil Rosin, Fatty Acids, and Pitch do not use metals in their processes.

Pretreatment standards for existing sources (PSES) recognize that organic toxic pollutants in this industry are reduced by good biological treatment. Numerical effluent limitations guidelines are proposed for control of metallic toxic pollutants in the same subcategories covered by metallic toxic pollutant limitations under BAT.

New source performance standards for direct dischargers are equivalent to BPT and BAT. New source performance standards for indirect dischargers are equivalent to PSES.

The Agency estimates that the total investment cost to be incurred by existing sources, both direct and indirect dischargers, to achieve these effluent limitations guidelines (BPT for Sulfate Turpentine and BAT) and pretreatment standards (PSES) is $484 thousand, with total operating cost of $937 thousand. A total of approximately 150 additional pounds per day of conventional pollutants will be removed as a result of the proposed BPT regulations for Sulfate Turpentine. In addition, a total of 2 pounds per day of nickel, 11 pounds per day of copper, and 120 pounds per day of zinc, will be removed by compliance with BAT and PSES regulations.

Subcategories	Treatment Technology	Values for BPTCA (1977) BOD5 Maximum Day kg/kkg Product	BOD5 30-Day Average kg/kkg Product	TSS Maximum Day kg/kkg Product	TSS 30-Day Average kg/kkg Product	pH
Subcategory A Char and Charcoal Briquets						
Subcategory B Gum Rosin and Turpentine	Biological treatment and sludge disposal	1.42	0.755	0.077	0.026	≥6 to ≤9
Subcategory C Wood Rosin, Turpentine and Pine Oil	Biological treatment and sludge disposal	2.08	1.10	1.38	0.475	≥6 to ≤9
Subcategory D Tall Oil Rosin, Pitch and Fatty Acid	Biological treatment and sludge disposal	0.995	0.529	0.705	0.243	≥6 to ≤9
Subcategory E Essential Oils	Biological treatment and sludge disposal	22.7	12.0	9.01	3.11	≥6 to ≤9
Subcategory F Rosin-Based Derivatives	Biological treatment and sludge disposal	1.41	0.748	0.045	0.015	≥6 to ≤9
Subcategory G Sulfate Turpentine	Biological treatment and sludge disposal	5.504	2.924	0.686	0.236	≥6 to ≤9

Subcategories	Treatment Technology	Values for BCT BOD5 Maximum Day kg/kkg Product	BOD5 30-Day Average kg/kkg Product	TSS Maximum Day kg/kkg Product	TSS 30-Day Average kg/kkg Product	pH
Subcategory A Char and Charcoal Briquets						
Subcategory B Gum Rosin and Turpentine	BPCTCA	1.42	0.755	0.077	0.026	≥6 to ≤9
Subcategory C Wood Rosin, Turpentine and Pine Oil	BPCTCA	2.08	1.10	1.38	0.475	≥6 to ≤9
Subcategory D Tall Oil Rosin, Pitch and Fatty Acid	BPCTCA	0.995	0.529	0.705	0.243	≥6 to ≤9
Subcategory E Essential Oils	BPCTCA	22.7	12.0	9.01	3.11	≥6 to ≤9
Subcategory F Rosin-Based Derivatives	BPCTCA	1.41	0.748	0.045	0.015	≥6 to ≤9
Subcategory G Sulfate Turpentine	BPCTCA	5.504	2.924	0.686	0.236	≥6 to ≤9

Subcategories	Contaminants of Interest	Treatment Technology	Values for BATEA (1983) 30-Day Average Copper mg/l	30-Day Average Nickel mg/l	30-Day Average Zinc mg/l
Subcategory A Char and Charcoal Briquets		No discharge of the process wastewater pollutants			
Subcategory B Gum Rosin and Turpentine					
Subcategory C Wood Rosin, Turpentine and Pine Oil					
Subcategory D Tall Oil Rosin, Pitch and Fatty Acids					
Subcategory E Essential Oils					
Subcategory F Rosin-Based Derivatives	Zinc	Metals Removal and Sludge Disposal			1.8
Subcategory G Sulfate Turpentine	Copper Nickel	Metals Removal and Sludge Disposal	1.8	1.8	

Subcategories	Contaminants of Interest	Treatment Technology	Values for New Source Performance Standards (NSPS) BOD5 Maximum Day kg/kkg Product	BOD5 30-Day Maximum kg/kkg Product	TSS Maximum Day kg/kkg Product	TSS 30-Day Maximum kg/kkg Product	Copper Maximum Day mg/l	Copper 30-Day Average mg/l	Nickel Maximum Day mg/l	Nickel 30-Day Average mg/l	Zinc Maximum Day mg/l	Zinc 30-Day Average mg/l	pH
Subcategory A Char and Charcoal Briquets													
Subcategory B Gum and Rosin and Turpentine	BOD_5, TSS, pH	BPTCA	RESERVED										
Subcategory C Wood Rosin, Turpentine and Pine Oil	BOD_5, TSS, pH	BPTCA	2.08	1.10	1.38	0.475							$\geq 6 - \leq 9$
Subcategory D Tall Oil Rosin, Pitch and Fatty Acids	BOD_5, TSS, pH	BPTCA	0.995	0.529	0.705	0.243							$\geq 6 - \leq 9$
Subcategory E Essential Oils	BOD_5, TSS, pH	BPTCA	RESERVED										
Subcategory F Rosin-Based Derivatives	BOD_5, TSS, pH, Zinc	BPTCA and Metals Removal	1.41	0.748	0.045	0.015					4.2	1.8	$\geq 6 - \leq 9$
Subcategory G Sulfate Turpentine	BOD_5, TSS, pH, Copper, Nickel	BPTCA and Metals Removal	5.504	2.924	0.686	0.236	4.5	1.8	4.1	1.8			$\geq 6 - \leq 9$

Subcategories	Contaminants of Interest	Treatment Technology	Values for Pretreatment Standards for Existing Source (PSES) Copper Maximum Day mg/l	Copper 30-Day Average mg/l	Nickel Maximum Day mg/l	Nickel 30-Day Average mg/l	Zinc Maximum Day mg/l	Zinc 30-Day Average mg/l
Subcategory A Char and Charcoal Briquets								
Subcategory B Gum Rosin and Turpentine								
Subcategory C Wood Rosin, Turpentine and Pine Oil								
Subcategory D Tall Oil Rosin, Pitch and Fatty Acids								
Subcategory E Essential Oils								
Subcategory F Rosin-Based Derivatives	Zinc	Metals Treatment and Sludge Disposal					4.2	1.8
Subcategory G Sulfate Turpentine	Copper Nickel	Metals Treat-ment and Sludge Disposal	4.5	1.8	4.1	1.8		

Subcategories	Contaminants of Interest	Treatment Technology	Values for Pretreatment Standards for New Sources (PSNS) Copper Maximum Day mg/l	Copper 30-Day Average mg/l	Nickel Maximum Day mg/l	Nickel 30-Day Average mg/l	Zinc Maximum Day mg/l	Zinc 30-Day Average mg/l
Subcategory A Char and Charcoal Briquets								
Subcategory B Gum Rosin and Turpentine								
Subcategory C Wood Rosin, Turpentine and Pine Oil								
Subcategory D Tall Oil Rosin, Pitch and Fatty Acids								
Subcategory E Essential Oils								
Subcategory F Rosin-Based De ivatives	Zinc	Metals Treatment and Sludge Disposal					4.2	1.8
Subcategory G Sulfate Turpentine	Copper Nickel	Metals Treat-ment and Sludge Disposal	4.5	1.8	4.1	1.8		

grab sample of incoming fresh process water also was taken at each plant.

Processing of Information

The technical data base which established subcategorization within the industry (Section IV), and identified the full range of in-process and treatment technology options available within each subcategory (Section VII) consisted of the following:

1. Review of available literature and previous studies;

2. Analysis of the data collection portfolios;

3. Information from industry and trade associations;

4. Information from plant visits; and

5. Results of analyses from the screening and verification sampling programs.

The raw waste characteristics for each subcategory were then identified (Section V). This included an analysis of:

1. The source and volume of water used in the specific processes and the sources of wastes and wastewaters in the plant; and

2. The constituents of all wastewaters, including traditional and toxic pollutants.

The full range of control and treatment technologies existing within each candidate subcategory was identified. This included an identification of each existing control and treatment technology, including both in-plant and end-of-pipe systems. It also included an identification of the wastewater characteristics resulting from the application of each existing treatment and control technology.

The costs and energy requirements of each of the candidate technologies identified were then estimated (Section VIII) both for a flow-weighted average plant within the subcategory and on a plant-by-plant basis. BPT technology costs were not considered except for sulfate turpentine processing.

Additional evaluation was made of non-water quality environmental impacts, such as the effects of the application of such technologies on other pollution problems.

PROFILE OF INDUSTRY

The Gum and Wood Chemicals Industry began in the United States when early colonists harvested pine cleorosin for use in construction of naval vessels. Since that time the industry has grown and expanded as new uses have been found for pine products. One of the more significant innovations has been the development of by-products from the Kraft paper process--tall oil and sulfate turpentine--as raw materials for the Gum and Wood Chemicals Industry.

The modern Gum and Wood Chemicals Industry can be grouped into the following major areas:

1. Char and charcoal briquets;

2. Gum rosin and turpentine;

3. Wood rosin, turpentine, and pine oil;

4. Tall oil rosin, fatty acids, and pitch;

5. Essential oils;

6. Rosin derivatives; and

7. Sulfate turpentine.

Char and Charcoal Briquets

Char results from the destructive distillations of softwood and hardwood (primarily the latter). Char, in turn, may be processed into charcoal briquets or activated carbon. Pyroligneous acid was once a by-product of the process, but has been discontinued in favor of petroleum substitutes. With the rising cost of petrochemicals, some plants are considering reinstituting the recovery process.

Charcoal is one of the more economically important products of the Gum and Wood Chemicals Industry. It is widely used as a recreational fuel, in the chemical and metallurgical industries, and in other areas, including use as a filter for gaseous and liquid streams.

The char and charcoal industry in the United States consists of 77 plants primarily concentrated in the eastern section of the country, with the heaviest concentration in the Ozark and Appalachian hardwood areas. Plant ownership varies from companies with numerous plants to singly-owned plants with local product distribution.

Gum Rosin and Turpentine

In terms of product value, gum rosin and turpentine products are a minor portion of the Gum and Wood Chemicals Industry. High labor costs for gum collection coupled with competition from foreign products has reduced the number of plants and the value of product shipments and the decline will probably continue.

Currently there are only seven plants in this segment of the industry, all located in Georgia. The greatest production is concentrated in southern and southeastern Georgia. The two largest plants have diversified and now are producing rosin-based derivatives in conjunction with gum rosin and turpentine.

The raw material comes from a few remaining pine gum farmers and from gum wholesalers. Although gum rosin and turpentine are the highest quality of such products in the naval stores industry, decreasing availability of domestic gum rosins is forcing manufacturers to rely on foreign sources or to use wood or tall oil rosin in derivative operations.

Wood Rosin, Turpentine, and Pine Oil

Wood rosin, turpentine, and pine oil produced by the solvent extraction and steam distillation of rosinous wood stumps, account for 19 percent of the total product value of the Gum and Wood Chemicals Industry, according to the 1972 Census of Manufacturers. The economic life of this segment of the industry is limited by diminishing raw materials and the development of competitive processes.

Historically, the industry used the pine stumps remaining from the harvesting of first-generation southern pine forests in the early part of the twentieth century. Few such stumps remain at the present time and second-generation stumps contain considerably lower rosin content.

This segment of the industry consists of five plants--one in Mississippi, three in Florida, and one in Georgia. Each plant occupies a land area of 40 to 60 hectares (100 to 150 acres), the majority of which is used for raw material storage. Three of the plants are located in urban areas; the remaining two are in rural settings.

Tall Oil Rosin, Fatty Acids, and Pitch

The growth of tall oil refining has continued since 1949; however, the production of fatty acids and rosins with low cross-product contamination is a fairly recent development.

Crude tall oil is particularly attractive as a raw material because of its availability as a "waste" product of the Kraft pulp and paper industry; this segment of the industry, therefore, provides increasing supplies of raw materials for tall oil fractionators. While there is a steady decline in naval stores production from gum and wood extraction, there is a corresponding production increase from tall oil.

Recent trends in the amount of tall oil produced by the kraft process have indicated a reduced rate of increase in the amount available. This has resulted from changes both in the Kraft process and in the Kraft process raw materials. More hardwood and younger growth pines are in use so that less oleoresin is available. If this trend continues, the availability of tall oil may decline.

Twelve tall oil distillation plants are currently in operation, primarily in the Southeast. Two additional plants are not in operation, but could be made operational if economic conditions so dictated.

Essential Oils

The essential oils produced in the Gum and Wood Chemicals Industry are cedarwood oil and pine scent. Cedarwood oil is produced by the steaming of cedarwood sawdust in pressure retorts to remove the oil from wood particles. One plant produces pine leaf oil for use as a scent in Christmas products. Pine needles are steamed to extract the oil.

In the eastern United States, cedarwood oil is a by-product of the production of cedarwood lumber and furniture from *Juniperus virginiana*. This wood contains 2 to 4 percent oil. Currently three plants produce cedarwood oil from this type of cedarwood.

In the western portion of the country, cedarwood oil is produced directly from a tree of the *Cedarus* family which is unsuitable for lumber production. Five plants use this raw material. The process involves grinding the whole tree into wood dust and extracting the oil by steaming.

The growing concerns in the industry are competition with synthetic oils and the dwindling supply of trees as raw material.

Rosin-Based Derivatives

Rosin-based derivatives are not included in SIC 2861, Gum and Wood Chemicals, but in SIC 2821, Plastics and Synthetic Materials. However, derivatives production is a natural extension of processing in Gum and Wood Chemicals plants since the rosin is available in the

plants. This study applies only to those derivatives operations which are located within and in conjunction with Gum and Wood Chemicals facilities.

Currently 13 Gum and Wood Chemicals plants are producing rosin derivatives. These plants are located within all four types of rosin producing plants.

Of all the Gum and Wood Chemicals processing operations, derivatives processing is the most profitable, at least partly due to a large product and market development effort in the industry. Derivatives products include ink resins, paint additives, paper size, oil additives, adhesives, wetting agents, chewing gum base, and chemical-resistant resins.

Sulfate Turpentine

Sulfate turpentine originally was considered a waste product in the digester relief gas of the Kraft pulp and paper process; with modern technology, however, it can be profitably recovered to such an extent that sulfate turpentine is the major source of turpentine in the Gum and Wood Chemicals Industry.

The distillation of sulfate turpentine yields four major compounds-a-pinene, b-pinene, dipentene, and pine oil. The primary uses of these compounds are for flavor, fragrances, resins, and insecticides. While b-pinene and dipentene are the components of greatest use, new methods and markets currently are being developed for a-pinene.

Turpene derivatives--generally produced in conjunction with sulfate turpentine distillation with b-pinene and dipentene as raw materials--provide tack (stickiness) in polymeric mixtures and pressure sensitive tapes.

DESCRIPTIONS OF PROCESSES

Char and Charcoal Briquets

Char and charcoal result from the combustion (thermal decomposition) of raw wood which drives off gases and vapors and leaves about one-third of the wood, by weight, as charcoal. Commercial charcoal is produced at a temperature of about 400° to 500°C.

During carbonization, distillates--collectively referred to as pyroligneous acid--are formed. Pyroligneous acid contains such compounds as methanol, acetic acid, acetone, tars, and oils. Because synthetic substitues are cheaper, current industry practice does not recover the by-products, but feeds the distillate and other flue gases to an afterburner for thermal destruction before exhausting them to

the atmosphere. This study found no facilities in the United States which recover distillation by-products. The condensable distillates or vapor also may be recycled as a fuel supply supplement, but this is not common in the industry.

Gum Rosin and Turpentine

Crude gum is obtained from healthy pines by exposing the sapwood. This operation usually takes place during December or January, since early removal of the bark stimulates early gum flow in the spring. The main flow of gum occurs from March through September, with the wound typically being treated with sulfuric acid to prolcng the period of flow.

The processing plants receive the raw gum, composed of about 68 percent rosin and 20 percent turpentine, in 197.3 kg (435 lb) barrels. A typical process flow schematic is shown in Figure III-1. The gum is emptied into a vat by inverting the crude gum containers over a high-pressure steam jet. This mixture is then filtered and washed, and the prepared crude gum material is distilled to separate the turpentine frcm the gum rosin. Non-contact shell-and-tube steam heating and sparging steam are used in the stills. Turpentine and water are distilled overhead and condensed with shell-and-tube condensers. The water is separated from the turpentine in the downstream receivers.

The gum rosin is removed from the bottom of the still and transferred to shipping containers while the rosin is in a molten state. Wastewater usually originates in three areas:

1. The liquid waste from the raw gum wash tank;

2. The water fraction from the turpentine-water separator; and

3. In some plants, a brine waste frcm a sodium chloride dehydration used to dewater the turpentine.

Wood Rosin, Turpentine and Pine Oil

Figure III-2 shows a typical process diagram. Pine stumps are washed in the plant and the water and sediment flow to a settling pond from which water recycles back to the washing operation. Wood hogs, chippers, and shredders mechanically reduce the wood stumps to chips approximately 5 centimeters (2 inches) in length and 3 millimeters (1/16 inch) thick. The chips are fed to a battery of retort extractors, which employ the following steps:

1. Water is removed from the chips by azeotropic distillation with a water-immiscible solvent;

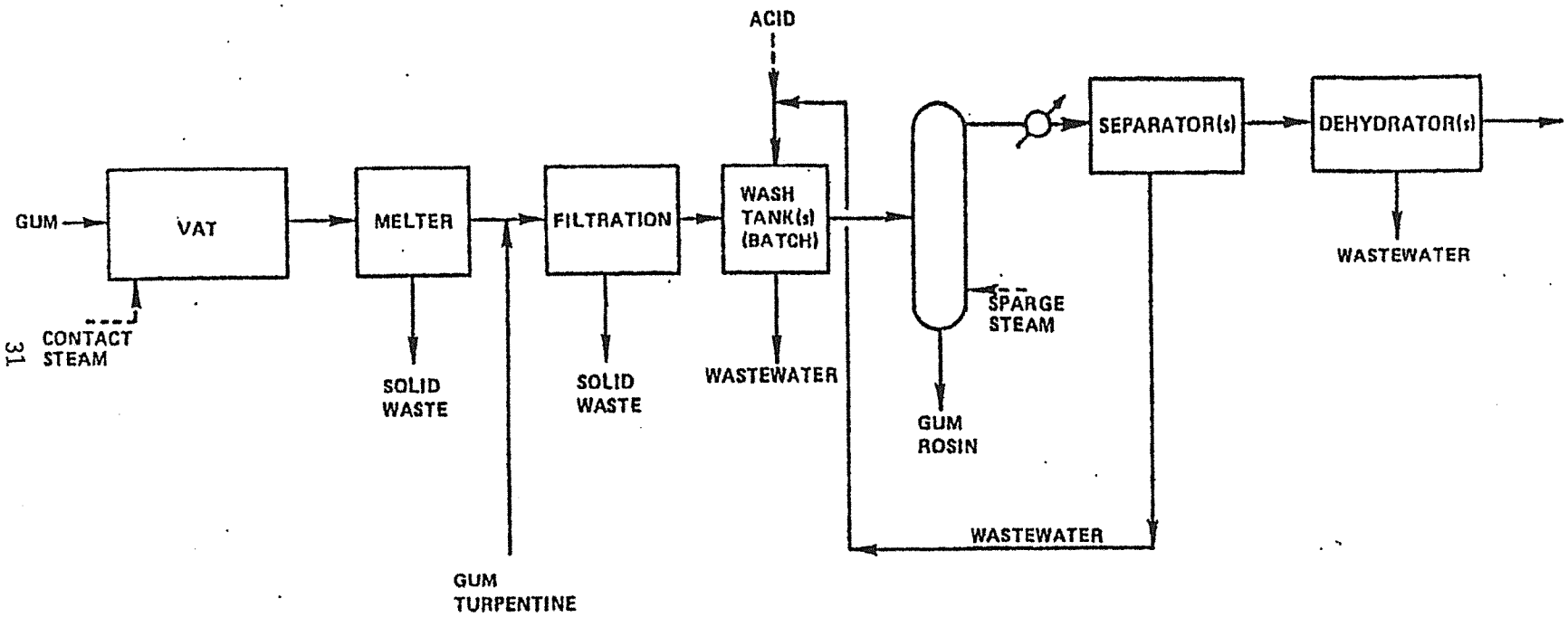

Figure III- 1.

GUM ROSIN AND TURPENTINE PRODUCTION

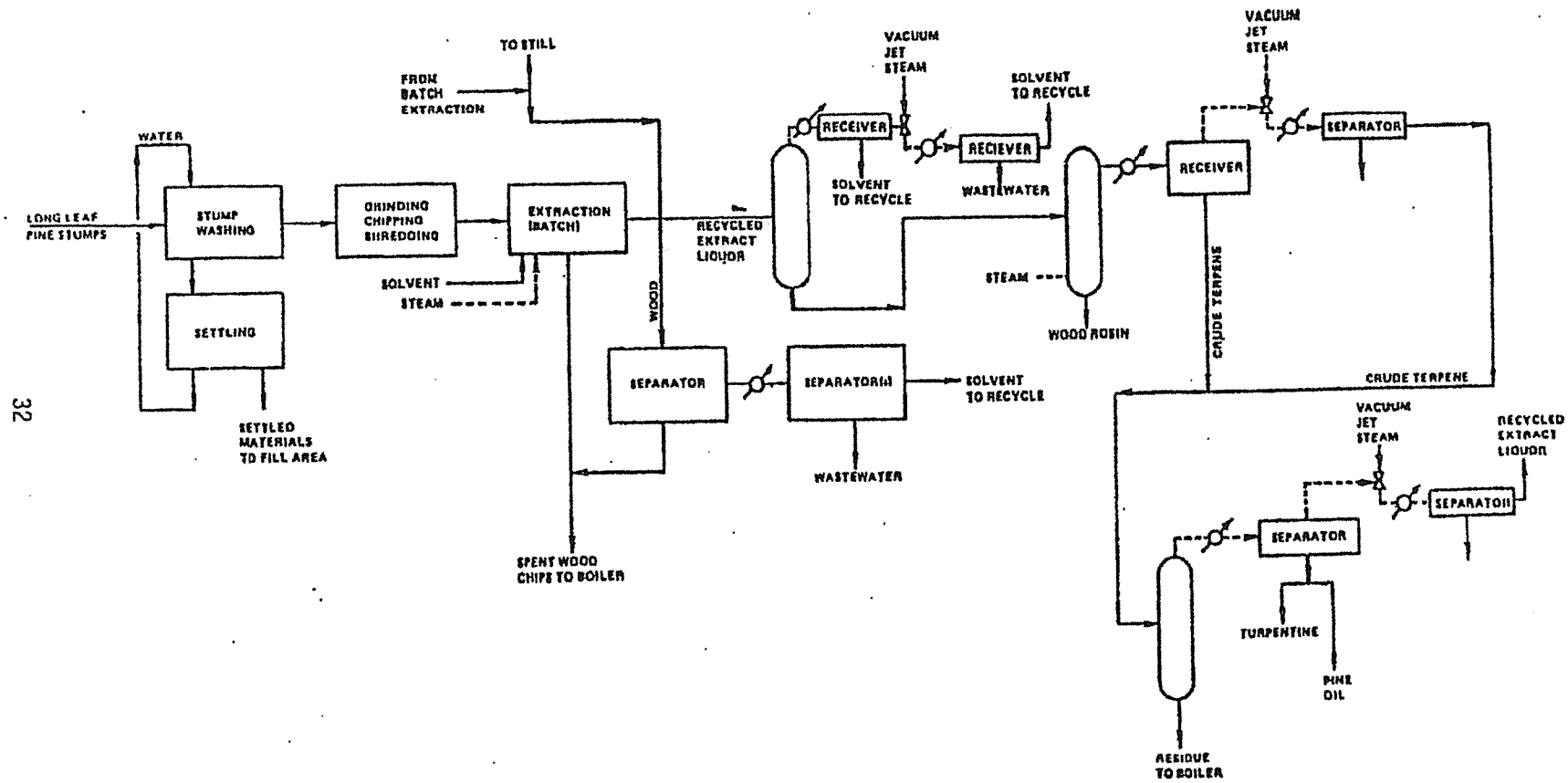

Figure III-2.

WOOD ROSIN, PINE OIL, AND TURPENTINE VIA SOLVENT EXTRACTION

2. The resinous material is extracted from the wood chips with a water-immiscible solvent; and

3. Residual solvent is removed from the spent wood chips by steaming.

After the steaming step, spent chips are removed from the retort and sent to the boilers as fuel. Any entrained wood fines coming from the retorts are removed in the entrainment separator and used also as fuel. The vapors from the entrainment separator are condensed and proceed to one or more separators where the solvent-water mixture separates. The solvent is recycled for use in the retorts.

The extract liquor is sent to a distillation column to separate the solvent from the products. The overhead from the column is condensed and enters a separator where condensed solvent is removed and recycled to the retorts. The vapor phase from the separator condenses in a shell-and-tube exchanger and enters a separator in which the remaining solvent and is separated. The solvent is sent to recycle and wastewater to treatment.

The bottom stream from the first distillation column enters a second distillation column, as shown in Figure III-2. Steam introduced into the bottom of the tower strips off the volatile compounds. This overhead steam enters a condenser and separator. A portion of the condensed liquor phase is refluxed back to the distillation column, but a larger portion is stored as crude turpene for further processing. The non-aqueous phase from the separator is stored as crude turpene while the aqueous phase is removed as wastewater. The bottom stream from the second distillation column is the finished wood rosin product.

The crude turpene removed in the second distillation column is stored until a sufficient quantity accumulates for processing in a batch distillation column. The distillation column is charged with the crude turpene material, and the condensed material enters a separator. The turpene and pine oil products are removed from the separator, while the vapors and steam from the steam ejector enter a second shell-and-tube exchanger and proceed to a separator. The bottom from this batch distillation column is a residue containing high-boiling point materials, best described as pitch, which are used as fuel.

Tall Oil Rosin, Fatty Acids, and Pitch

A schematic process flow diagram of a typical crude tall oil fractionation process is presented in Figure III-3.

The crude tall oil is treated with dilute sulfuric acid to remove some residual lignins as well as mercaptans, disulfides, and color

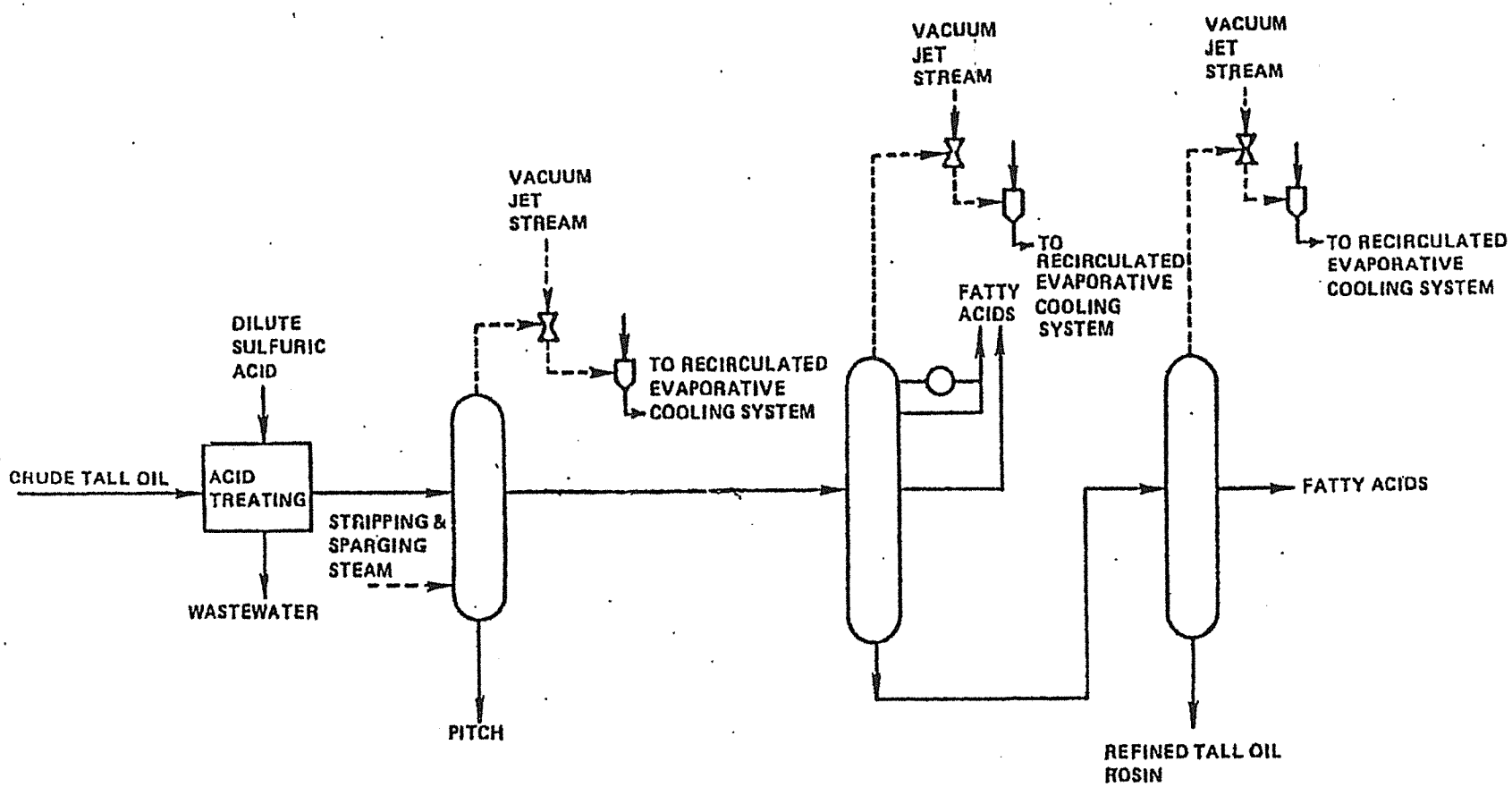

Figure III-3.

CRUDE TALL OIL FRACTIONATION AND REFINING

materials. Acid wash water is discharged to the process sewer. The stock then proceeds to the fractionation process. In the first fractionation column, the pitch is removed from the bottoms and is either sold, saponified for production of paper size, or burned in boilers as fuel. The remaining fraction of the tall oil (rosin and fatty acid) proceeds to the pale plant, which improves the quality of the raw materials by removing unwanted materials such as color bodies. The second column separates low-boiling point fatty acid material, while the third column completes the separation of fatty and rosin acids.

The wastewater generated in this subcategory results from pulling a vacuum on the distillation towers. This water generally is recycled, but excess water is discharged to the plant sewer.

Essential Oils

Figure III-4 is a typical process flow schematic diagram for steam distillation of cedarwood oil from scrap wood fines of red cedar.

Raw dry dust from the planing mill and raw grain dust from the sawmill are mixed to obtain a desired blend and then fed pneumatically to mechanical cyclone separators located on top of the retorts. The cedarwood oil is extracted by injecting steam directly into the retort. The steam diffuses through the cedarwood dust, extracts the oil of cedarwood, exits through the top of the retort, and condenses to an oil/water mixture. Following the steam extraction, the spent sawdust cools. It is then stored and eventually sent to the boiler as a fuel.

The primary product is a crude light oil which is separated by two oil/water separators immediately downstream of the condensers. The light oil is removed and mixed with clay which lightens the product by removing color bodies and stabilizes the color of the product by inhibiting further oxidation. The clay/oil slurry is filtered through plate and frame filter presses, and the spent clay-filter material is hauled to landfill for final disposal. The lightened oil product proceeds to bulk storage and blending, and is finally drummed for shipment.

The water phase, which is separated in the stillwells, contains a heavy red crude oil. This material is separated from the water phase in three consecutive settling tanks. The heavy red oil is periodically removed and drummed for sale as a by-product, while the underflow, or remaining water phase, is discharged as wastewater.

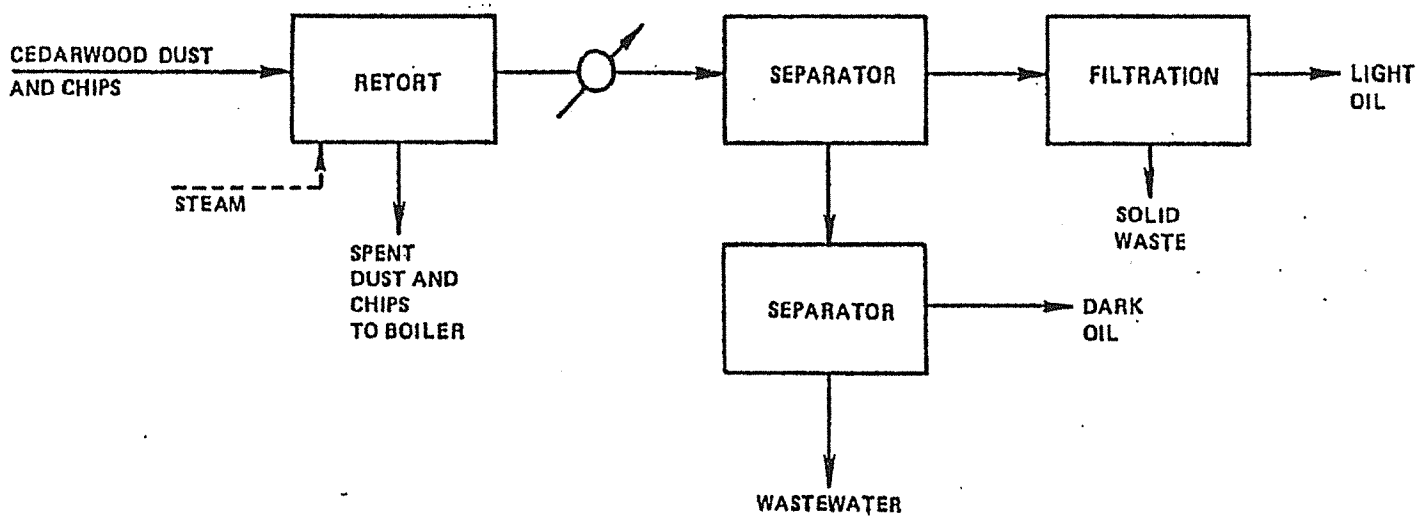

Figure III- 4.

DISTILLATION AND REFINING OF ESSENTIAL OILS

Rosin Derivatives

Figure III-5 illustrates a typical rosin derivative process. Process operating conditions in the reaction kettle depend on product specifications, raw materials, and other variables. A simple ester is produced from stump wood rosin (WW grade) and U.S.P. glycerin under high-temperature vacuum conditions. A steam sparge (lasting approximately 2-3 hours) removes excess water of esterification; this allows completion of the reaction and removes fatty acid impurities for compliance with product specifications. The condensable impurities are condensed in a non-contact condenser on the vacuum leg and stored in a receiver. Non-condensables escape to the atmosphere through the reflux vent and steam vacuum jets. The production of phenol and maleic anhydride modified tall oil resin ester is similar to simple rosin ester production except that steam sparging is seldom, if ever, used; and other polyhydric alcohols may be used in the product formulation.

Wastewater comes from the chemical reaction, separation of product, and wash down of reaction vessels.

Sulfate Turpentine

Figure III-6 is a simple process flow schematic diagram for distillation of sulfate turpentine, which is condensed from the relief gas from the digestor of the Kraft pulping process. During distillation, the first tower usually strips odor-causing mercaptans from the turpentine. Subsequent fractionation breaks the turpentine into its major components: alpha-pinene, beta-pinene, dipentene, and sulfated pine oil. Minor components include limonene, camphene, and anethol.

The distillation of sulfate turpentine is an intermediate production step. Some of these turpentine components are marketed after distillation, but the majority of them remain in the plant for further processing.

The operations are usually batch reactions that take place in reaction kettles in the presence of some organic solvent and metal catalyst. The selection of catalysts and solvents depends on the desired products, of which there are approximately 200.

Wastewater usually is generated from the condensation in the distillation tower and from wash down of reactors.

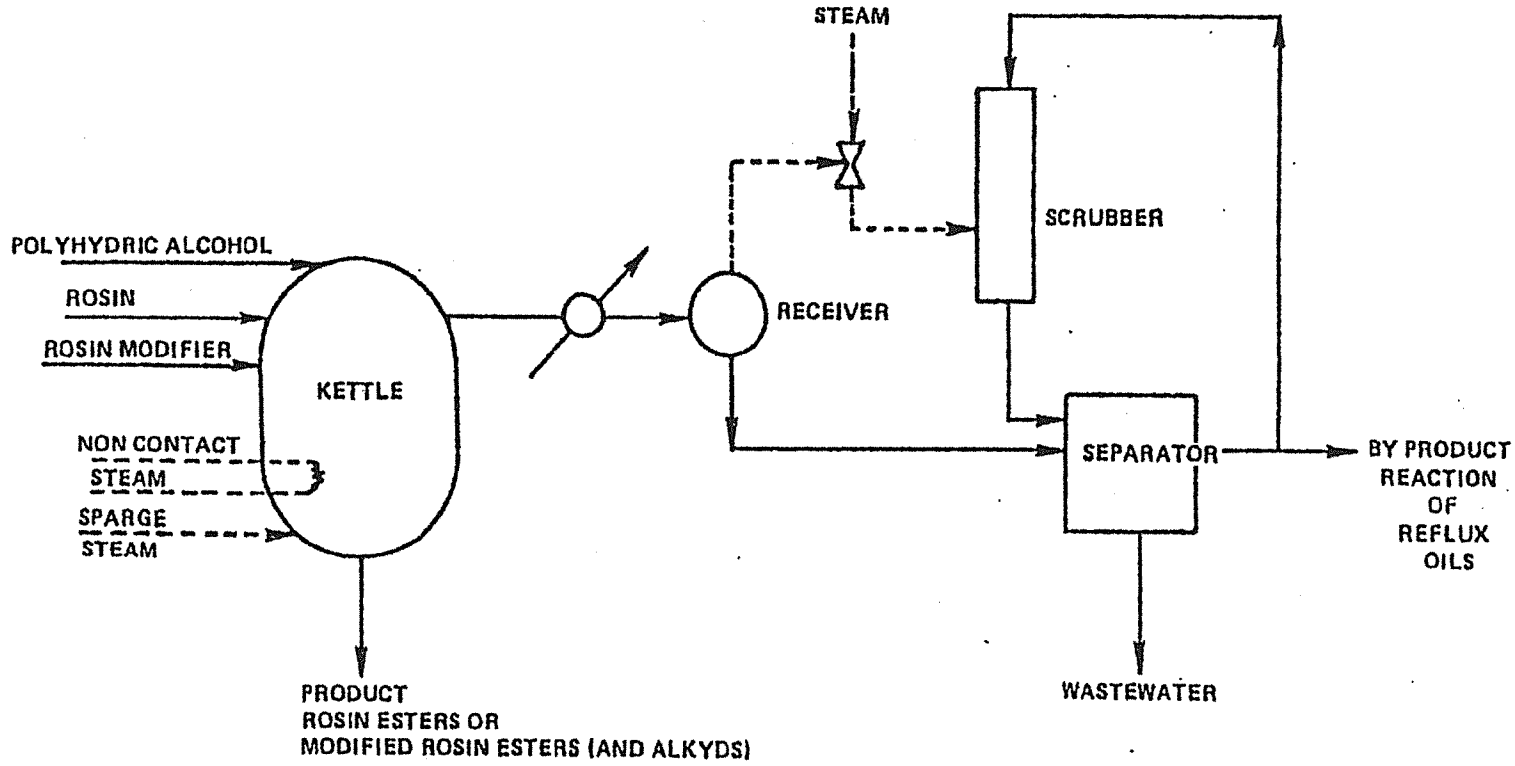

Figure III-5.

ROSIN DERIVATIVES MANUFACTURE

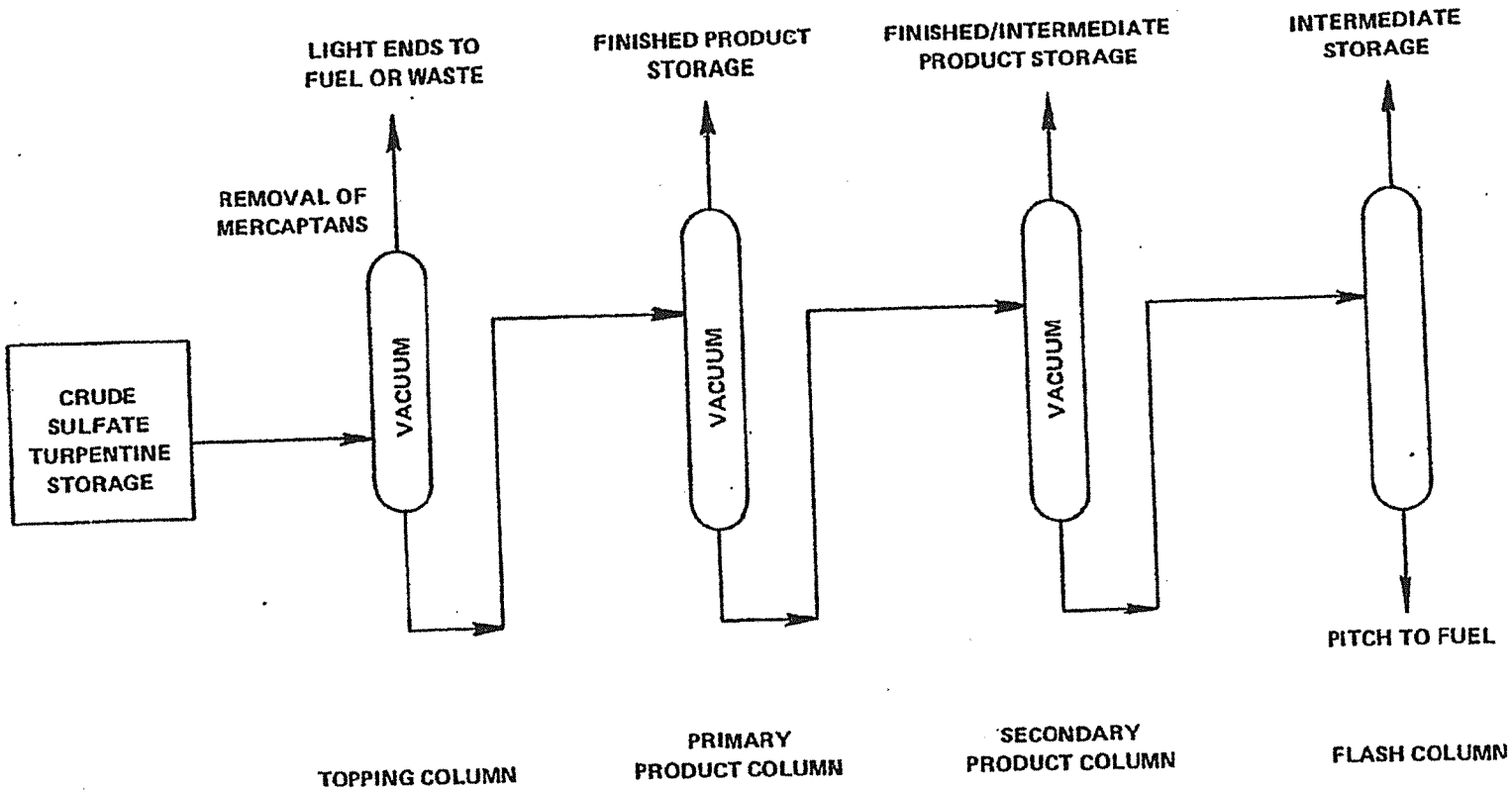

Figure III- 6.

BASIC PROCESS FLOW
TURPENTINE DISTILLATION

SECTION IV

INDUSTRIAL SUBCATEGORIZATION

Review of existing industrial subcategorization for the Gum and Wood Chemicals Industry required a determination of whether sufficient differences exist within the industry to support the current subcategorization scheme, or whether modifications are required. The rationale for subcategorization is based upon such factors as: (1) plant characteristics and raw materials; (2) wastewater characteristics, including toxic pollutant characteristics; (3) manufacturing processes; and (4) applicable methods of wastewater treatment and disposal.

In developing the previously published effluent limitation guidelines and pretreatment standards for the industry, EPA determined that plants exhibited sufficient differences to justify multiple subcategorization. That subcategorization was as follows:

1. Char and charcoal briquets;

2. Gum rosin and gum turpentine;

3. Wood rosin, turpentine, and pine oil;

4. Tall oil rosin, pitch, and fatty acids;

5. Essential oils; and

6. Rosin derivatives.

The subcategorization review confirmed the above subcategories were appropriate, except that a seventh subcategory, Sulfate Turpentine, should be included.

SUBCATEGORIZATION REVIEW

The Agency considered the following factors in the subcategorization review:

1. Manufacturing process;

2. Plant location and climate;

3. Raw materials;

4. Plant age, size, and flow;

5. Products; and

6. Wastewater characteristics and treatability.

Manufacturing Process

The process step common to gum, wood, tall oil chemical, essential oils, and sulfate turpentine production is the use of steam distillation to separate the major constituents. However, there is a large difference in the degree of technology used in the five processes. Wood, rosin, tall oil chemicals, and sulfate turpentine use fractionation towers for multi-product separation. The gum and essential oil subcategories use simple reactors to separate the volatile from the non-volatile components.

The production of charcoal and rosin-based derivatives differs from the other processes because steam distillation is not employed. Charcoal is a destructive distillation product of wood. The production of rosin-based derivatives is not a distillation but a chemical modification. For some reactions, a catalyst is employed. The Agency has determined that these distinct manufacturing processes are a basis for subcategorization.

Plant Location and Climate

The 1972 Census of Manufacturers places the majority of the gum and wood chemicals production facilities in the southern states (see Figures IV-1 and IV-2). These plants produced over 84 percent of the industry output in terms of dollar value added to the raw material.

Plant location and local climate can affect the performance of certain end-of-pipe wastewater treatment systems, e.g., aerated lagoons and activated sludge. However, treatment systems including biological treatment, can be adapted to the small variation in climate found in the Gum and Wood Chemicals Industry. Plant location and climate are not criteria for subcategorization because of the general southeastern location of the plants and the adaptability of the treatment systems to climatic conditions.

ONE Environmental Group

RECEIVED – DEQ
JUN 28 2010
Tidewater Regional Office

June 22, 2010

Mr. Mark Sauer
Virginia Department of Environmental Quality
5636 Southern Boulevard
Virginia Beach, VA 23462

Re: VPDES Permit Temperature Limit
Ashland Hercules Water Technologies
Franklin, Virginia
VA0003433

Dear Mr. Sauer,

The purpose of this letter is to request that the Virginia Pollution Discharge Elimination System (VPDES) permit for the Ashland Hercules Water Technologies Facility in Franklin, Virginia be revised to increase the temperature limit of the wastewater discharge. This request was originally made in the cover letter for the VPDES permit renewal (October 2006). The temperature limit was further discussed in a meeting at the Virginia Department of Environmental Quality (DEQ) office on December 17, 2008. The original submission included river and discharge temperature data collected on August 9, 2006. During the December 17, 2008 meeting, DEQ requested that river temperature data be collected for the other three quarters of the year. This letter is to present the four quarters of river data collected and to request an increase in temperature limit.

The current VPDES permit temperature limit for Outfall 002 is 30 C as measured on a weekly basis. The water quality standards for the Nottoway River are 32 C and the basis for the 30 C temperature limit is Best Engineering Judgment (BEJ).

Study Methods

The study plan was to measure the effluent from Outfall 002 to document temperature mixing in the Nottoway River until the effluent parameters were stable across the River and a stable temperature was achieved. Measuring of the temperature stabilization was completed on four separate occasions; these represent four different seasonal temperature conditions.

1st Quarter	March 18, 2009
2nd Quarter	June 11, 2009
3rd Quarter	August 9, 2006
4th Quarter	December 1, 2009

Temperature measurements were taken with a YSI 55 or 63 temperature meter which was calibrated in accordance with manufacturer's instructions prior to use. The temperature probe was attached to a pole with depth increments marked to the one foot interval. During the study, temperature measurements were able to be taken from discrete River depths over the entire water column. The sampling locations were recorded with a Tremble Backpack or Trimble GeoExplorer handheld global positioning system (GPS) unit. During each event, the GPS was also used to document three existing groundwater monitoring wells which are tied into the plant coordinate system with known coordinates. This allowed the river sampling points to be plotted accurately onto the map of the Nottoway River.

The temperature plume was traced until the change in temperature was no longer present. Temperature measurements were also taken within the previously defined mixing zone to confirm that the temperature change was contained within the mixing zone.

Results

Temperature results are presented for the four events in Figures 1 through 4. Tables with the temperature at each interval are presented in Tables 1 through 4.

March 2009- Figure 1 plots the temperature of the effluent and Nottoway River. The maximum temperature for each point was used in Figure 1. Table 1 presents the data for the 21 sampling locations. The temperature of the effluent was 12.0 C and the temperature of the river was 8.4 C. As can be seen from Figure 1, the effluent did not raise the temperature of the Nottoway River and the only location of raised temperature was in the outfall ditch prior to discharge to the Nottoway.

June 2009- Figure 2 plots the temperature of the effluent and Nottoway River. The maximum temperature for each point was used in Figure 2. Table 2 presents the data for the 24 sampling locations. The temperature of the effluent was 23.3 C and the temperature of the river was 23.0 C. As can be seen from Figure 2, the effluent did not raise the temperature of the Nottoway River and the only location of raised temperature was in the outfall ditch prior to discharge to the Nottoway. These results are consistent with the March 2009 results.

August 2006- The August 2006 event was conducted during a period of low river flow and represents worst case conditions. Figure 3 plots the temperature of the effluent at 5 feet below the river surface. This interval was selected because it was considered most representative of the water column. The data is presented in Table 3. The temperature

of the effluent was 29.3 C and the temperature of the river was 28.9 C. As can be seen from Figure 3, the effluent raised the temperature of the Nottoway River from the Outfall ditch. The area of elevated temperature is less than one quarter of the river width for approximately 180 feet downriver. The elevated temperature was close to the east bank and raised the small section of river to 29.0 – 29.6 C. The temperature of the Nottoway River upgradient of the Facility was 28.9 C. Therefore, the effluent raised a small portion of the Nottoway River by 0.1 to 0.7-C. The configuration of the temperature plume is significantly smaller and in the same location as the conductivity plume from the May 2000 mixing zone work.

December 2009- Figure 4 plots the temperature of the effluent and Nottoway River. The maximum temperature for each point was used in Figure 4. Table 4 presents the data for the 22 sampling locations. The temperature of the effluent was 19.0 C and the temperature of the river was 9.2 C. As can be seen from Figure 4, the effluent did not raise the temperature of the Nottoway River and the only location of raised temperature was in the outfall ditch prior to discharge to the Nottoway. These results are consistent with both the March and June 2009 results.

As can be seen from the figures and tables, the discharge from Outfall 002 does not have any impact the Nottoway during the majority of the year and has a very small impact of raising the temperature by 0.1 to 0.7 C during the period of low river flow. The total temperature impact area is substantially less than the mixing zone area. It is clear that the increase in the effluent temperature will not result in a violation of the water quality standard of 32 C for the Nottoway River.

Anti-Backsliding Evaluation

In 9 VAC-25-31-220.L.2 the regulations allow for permits to be reissued with less stringent effluent limitations as long as certain exceptions are met. This evaluation meets the exception requirements for the following reason.

1. b(1) - "Information is available which was not available at the time of permit issuance (other than revised regulations, guidance, or test methods) and which would have justified the application of a less stringent effluent limitation at the time of permit issuance".

The new information that is available is the quarterly temperature data information provided in this letter.

The 1996 VPDES Program Fact Sheet Attachment 4 outlined the basis for the current temperature limit as "believed to be protective of aquatic life in the receiving stream". It is also noted that the limit is based on BEJ to protect water quality. The new information presented in this letter indicates that the temperature in Outfall 002 does not affect the Nottoway River and therefore an increased in discharge temperature would still allow for the discharge to meet the BEJ objectives. An increase in the VPDES discharge permit

limit for Outfall 002 from 30 C to 34 C is respectfully requested based on the information contained within this letter.

We appreciate your consideration of this request to increase the temperature limit in the discharge. We are available to provide further information and clarification, if necessary. We look forward to your response. Please let me know if you have any questions (804-514-6365).

Sincerely,

Catherine C. Warner

Catherine C. Warner, P.E., D.E.E.
Principal
ONE Environmental Group, LLC
1915 Huguenot Road, Suite 103
Richmond, Virginia 23235
cwarner@onenev.com

Attachments

cc: Sean Maconaghy – Ashland Hercules Water Technologies

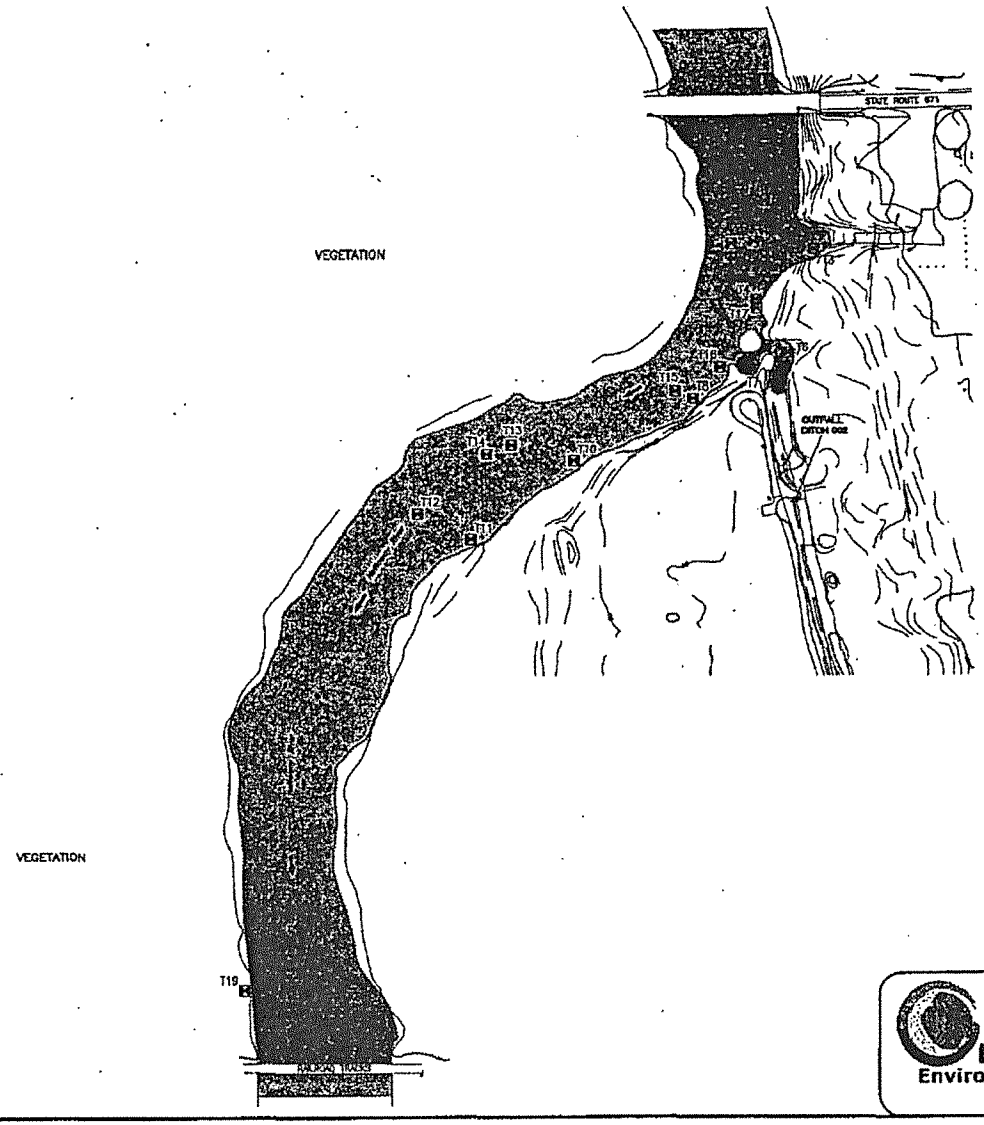

LEGEND

- RIVER TEMPERATURE STUDY POINT TAKEN ON 3-18-09
- 8.0–9.0°C
- >9.0°C

NOTE:
EFFLUENT AT T6 LOCATION RECORDED AT 3 FEET BELOW RIVER SURFACE

0 150 300
SCALE: 1"=150'

ONE Environmental Group	FRANKLIN RIVER TEMPERATURE STUDY MARCH 18, 2009	Drawn By: LEC	Date: 2-11-10
		Checked By: EH	Revision Date:
	HERCULES INCORPORATED FRANKLIN, VIRGINIA	Acad File No.: OEG0001	Figure No.: 1
		Project No.:	

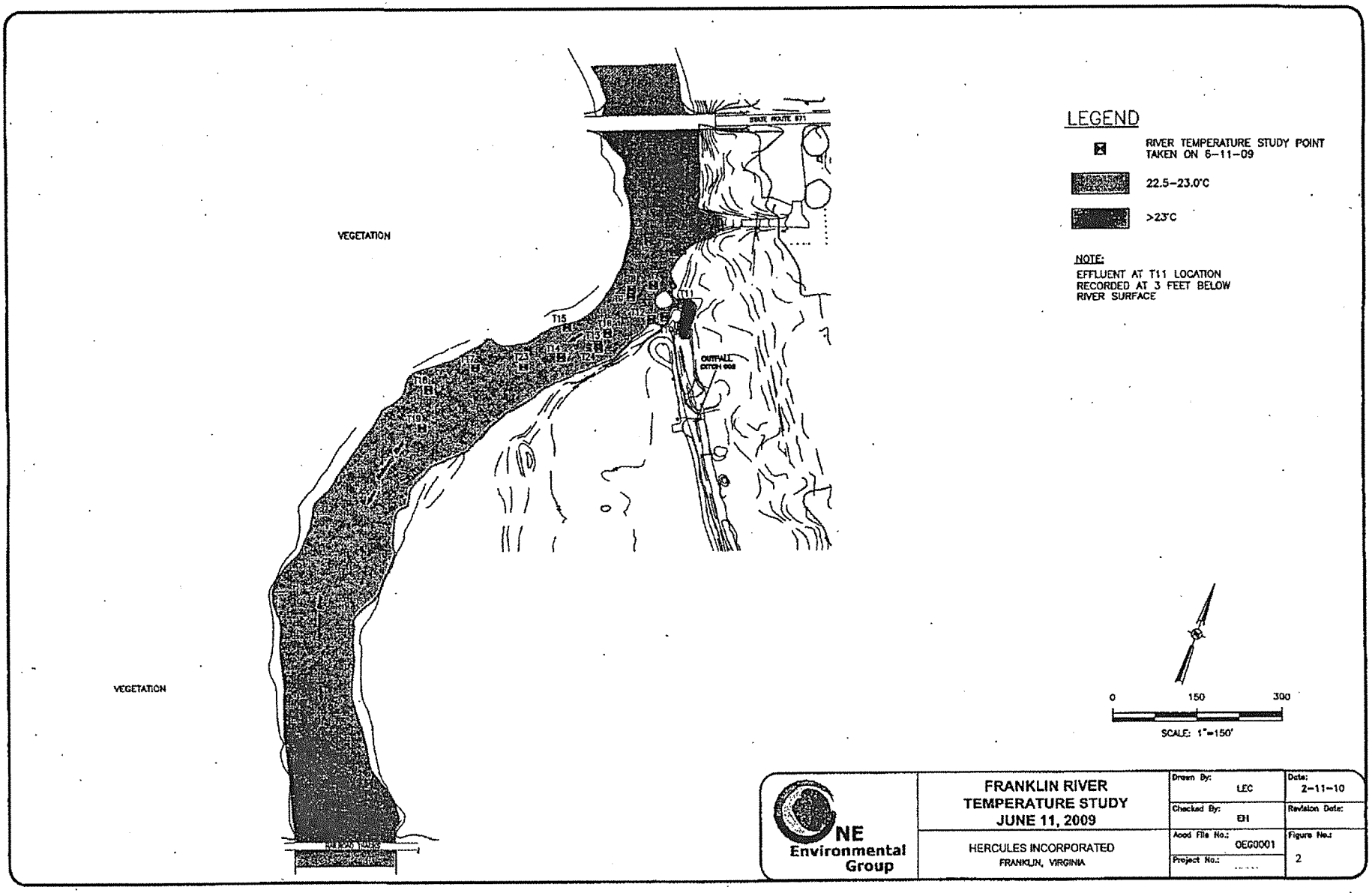
VEGETATION
VEGETATION
STATE ROUTE 671
T11
T15
T16
T13
T14
T23
T24
T17
T18
T19
OUTFALL
DITCH 008
LEGEND
RIVER TEMPERATURE STUDY POINT TAKEN ON 6-11-09
22.5-23.0°C
>23°C
NOTE:
EFFLUENT AT T11 LOCATION RECORDED AT 3 FEET BELOW RIVER SURFACE
0
150
300
SCALE: 1"=150'
ONE Environmental Group
FRANKLIN RIVER TEMPERATURE STUDY JUNE 11, 2009
HERCULES INCORPORATED
FRANKLIN, VIRGINIA
Drawn By: LEC
Checked By: EH
Acad File No.: OEG0001
Project No.:
Date: 2-11-10
Revision Date:
Figure No.: 2

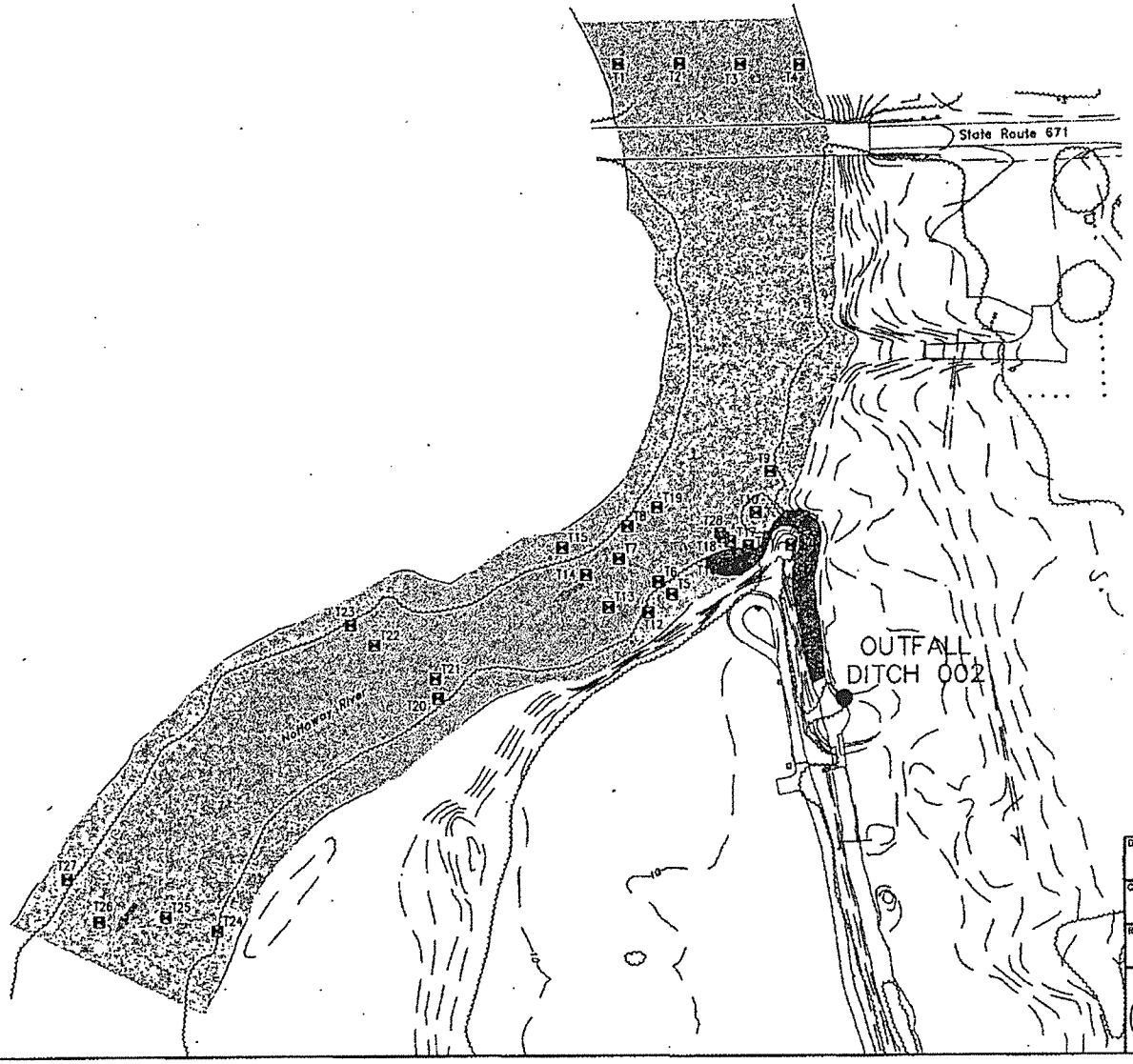

GES

LEGEND

- MIXING ZONE TEMPERATURE STUDY POINT
- 28.5 – 29.0°c
- 29.1 – 29.5°c
- >29.5°c

NOTE:

ALL TEMPERATURES WERE TAKEN AT 5 FEET BELOW RIVER SURFACE.

DRAFTED BY: W.A.W. (N.J.)	MIXING ZONE TEMPERATURE STUDY
CHECKED BY: K.G.	HERCULES INCORPORATED FRANKLIN VIRGINIA
REVIEWED BY: C.W.	Groundwater & Environmental Services, Inc. 23 SOUTH 13TH STREET, SUITE 201, RICHMOND, VA 23219
NORTH	SCALE IN FEET 0 100 / DATE 10-17-06 / FIGURE 3

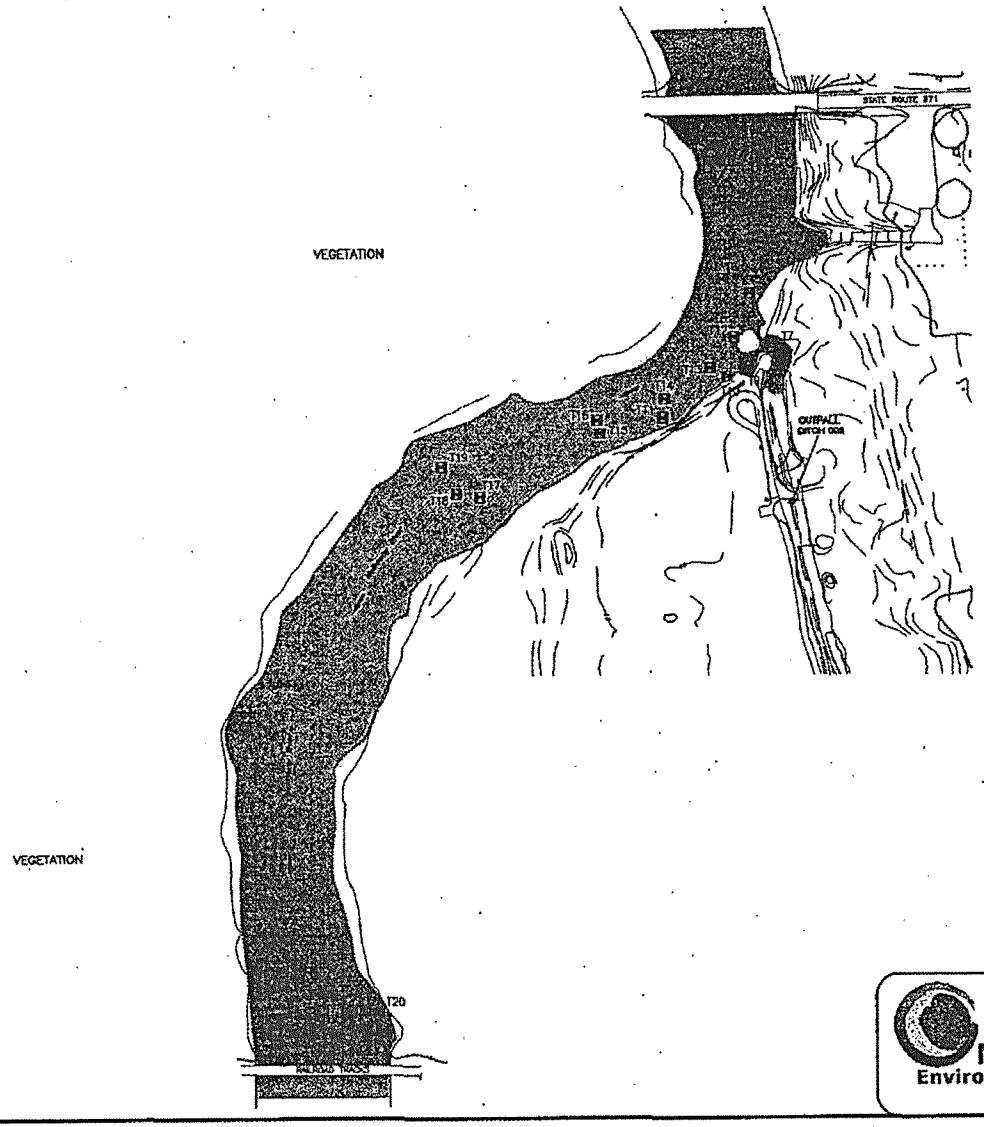

LEGEND

- RIVER TEMPERATURE STUDY POINT TAKEN ON 12-1-09
- 9.0–10.0°C
- >10°C

NOTE:
EFFLUENT AT T7 LOCATION RECORDED AT 3 FEET BELOW RIVER SURFACE

0 150 300
SCALE: 1"=150'

ONE Environmental Group	FRANKLIN RIVER TEMPERATURE STUDY DECEMBER 1, 2009	Drawn By: LEC	Date: 2-11-10
		Checked By: EH	Revision Date:
	HERCULES INCORPORATED FRANKLIN, VIRGINIA	Acad File No.: OEG0001	Figure No.: 4
		Project No.:	

Mixing Zone Temperature Study Data
March 18, 2009
Ashland Hercules
Franklin, Virginia

Temperature Location ID	Temp. (Deg. C) 1 foot	Temp. (Deg. C) 5 feet	Temp. (Deg. C) 10 feet	Temp. (Deg. C) at Bottom Sample	Depth of Bottom Sample (feet)
T1	8.4	8.4	8.4	8.5	12'10"
T2	8.4	8.4	~	8.6	8'
T3	8.5	8.4	8.4	8.4	10'5"
T4	8.5	8.4	8.5	8.5	17'5"
T5	8.5	8.5	~	8.5	7'.5"
T6	12.0	~	~	10.6	3'
T7	10.5	8.7	8.6	8.8	18'
T8	8.8	8.7	8.7	8.7	18'
T9	8.9	8.9	8.8	8.7	18'
T10	8.9	8.8	8.8	8.8	10'
T11	8.8	8.7	8.7	8.7	10'
T12	8.7	8.6	8.6	8.7	19'
T13	8.8	8.8	8.7	8.7	19'
T14	8.8	8.8	8.7	8.7	17'
T15	8.8	8.8	8.7	8.8	19'
T16	8.9	8.8	8.8	8.8	19'
T17	8.8	8.8	8.8	8.8	18'
T18	8.8	8.8	8.8	8.8	11'
T19	8.9	8.9	8.8	8.9	19'
T20	8.9	8.8	8.8	8.8	10'
T21	8.7	8.8	~	8.8	8'

All depths are below surface of river.
Temperatures in red are >9.0
Temperatures in black are <9.0

Mixing Zone Temperature Study Data
June 11, 2009
Ashland Hercules
Franklin, Virginia

Temperature Location ID	Temp. (Deg. C) 1 foot	Temp. (Deg. C) 5 feet	Temp. (Deg. C) 10 feet	Temp. (Deg. C) 15 feet	Temp. (Deg. C) at Bottom Sample	Depth of Bottom Sample (feet)
T1	23.0	23.0	22.9	~	22.9	14'
T2	23.0	22.8	22.8	~	22.8	14'5'
T3	22.8	22.8	22.8	~	22.8	12'
T4	22.9	22.9	22.8	22.8	22.8	17'
T5	22.7	22.7	22.8	22.8	22.8	19'
T6	22.8	22.7	22.8	22.8	22.8	18'
T7	22.8	22.8	22.8	22.8	22.8	18'
T8	22.8	22.8	22.8	22.8	22.8	15'
T9	22.7	22.8	22.8	22.8	22.8	15'
T10	22.8	22.8	~	~	22.8	9'
T11	22.8	~	~	~	23.3	3'
T12	22.8	22.8	22.8	~	22.8	13'5'
T13	22.8	22.8	27.8	22.8	22.8	18'
T14	22.8	22.8	22.8	22.8	22.8	19'
T15	22.9	22.9	~	~	22.8	7'
T16	22.9	22.8	22.8	22.8	22.8	19'
T17	22.8	22.8	22.8	22.8	22.8	19'
T18	22.9	22.8	22.8	22.8	22.8	19'
T19	22.9	22.9	22.9	22.9	22.8	19'
T20	22.9	22.9	22.9	22.9	22.9	19'
T21	22.9	22.9	22.9	22.9	22.8	16'5'
T22	22.9	22.9	22.9	~	22.9	10'
T23	23.0	22.9	22.9	22.9	22.9	19'
T24	23.0	22.9	22.9	22.9	22.9	19'

All depths are below surface of river.
Temperatures in red are >23.1
Temperatures in black are <23.0

Mixing Zone Temperature Study Data
August 9, 2006
Ashland Hercules
Franklin, Virginia

Temperature Location ID	Temp. (Deg. C) 1 foot	Temp. (Deg. C) 5 feet	Temp. (Deg. C) 10 feet	Temp. (Deg. C) at Bottom Sample	Depth of Bottom Sample (feet)
T1	29.2	28.9	28.8		
T2	29.1	28.9	28.8		
T3	28.8	28.9	28.8	28.7	
T4	28.9	28.8	28.8		
T5	29.1	28.9		28.9	8
T6	29.0	29.0	28.8	28.9	16
T7	29.2	28.9	28.8	28.9	12
T8	29.2	28.9		28.9	9
T9	29.0	28.9	28.8	28.9	13
T10	29.0	28.9		29.3	7
T11	29.3	29.3		29.5	7
T12	29.4	29.1	28.9		
T13	28.8	28.8	28.9	29.0	16
T14	29.0	28.8	28.8	28.8	
T15	28.8	28.8			
T16	29.5	29.6		29.6	7
T17	29.3	29.5	29.5		
T18	29.4	29.1	29.0	29.0	17
T19	29.0	28.8	28.8		
T20	29.3	29.0	29.0		
T21	29.2	28.8	28.8	28.8	13
T22	29.2	29.0	28.8	28.8	15
T23	29.3	29.1	29.1	29.1	18
T24	29.0	28.9	28.9		
T25	29.1	28.8	28.8	28.8	14
T26	29.2	29.0	28.9	28.9	17
T27	29.3	29.1		29.0	6
T28	28.9	28.8	29.0	29.1	12

All depths are below surface of river.
Temperatures in red are >29.4
Temperatures in green are betweem 29.1 and 29.4
Temperatures in black are <29.1

Mixing Zone Temperature Study Data
December 1, 2009
Ashland Hercules
Franklin, Virginia

Temperature Location ID	Temp. (Deg. C) 1 foot	Temp. (Deg. C) 5 feet	Temp. (Deg. C) 10 feet	Temp. (Deg. C) 15 feet	Temp. (Deg. C) at Bottom Sample	Depth of Bottom Sample (feet)
T1	9.3	9.2			9.2	8'
T2	9.1	9.1	9.1		9.2	14'
T3	9.1	9.2	9.2		9.2	10'
T4	9.2	9.2	9.2		9.2	18'
T5	9.1	9.2	9.2	9.2	9.2	15'
T6	9.1	9.2	9.2			10'
T7	19.0				19.0	3'
T8						
T9	11.8	11.0			11.0	5'
T10	9.5	9.4	9.4		9.4	10'
T11	9.3	9.3	9.4		9.4	13'
T12	9.2	9.2	9.2		9.2	14'
T13	9.2	9.3	9.2		9.2	18'
T14	9.2	9.2	9.3		9.3	18'
T15	9.5	9.3	9.4		9.3	12'
T16	9.2	9.2	9.3	9.3	9.3	15'
T17	9.3	9.3	9.4		9.4	18'
T18	9.2	9.3	9.3		9.3	18'
T19	9.3	9.3	9.3		9.3	18'
T20	9.3	9.3			9.3	8'
T21	9.3	9.3			9.3	9'
T22	9.3	9.3	9.3	9.3	9.3	15'

All depths are below surface of river.
Temperatures in red are >10.0
Temperatures in black are <10.0