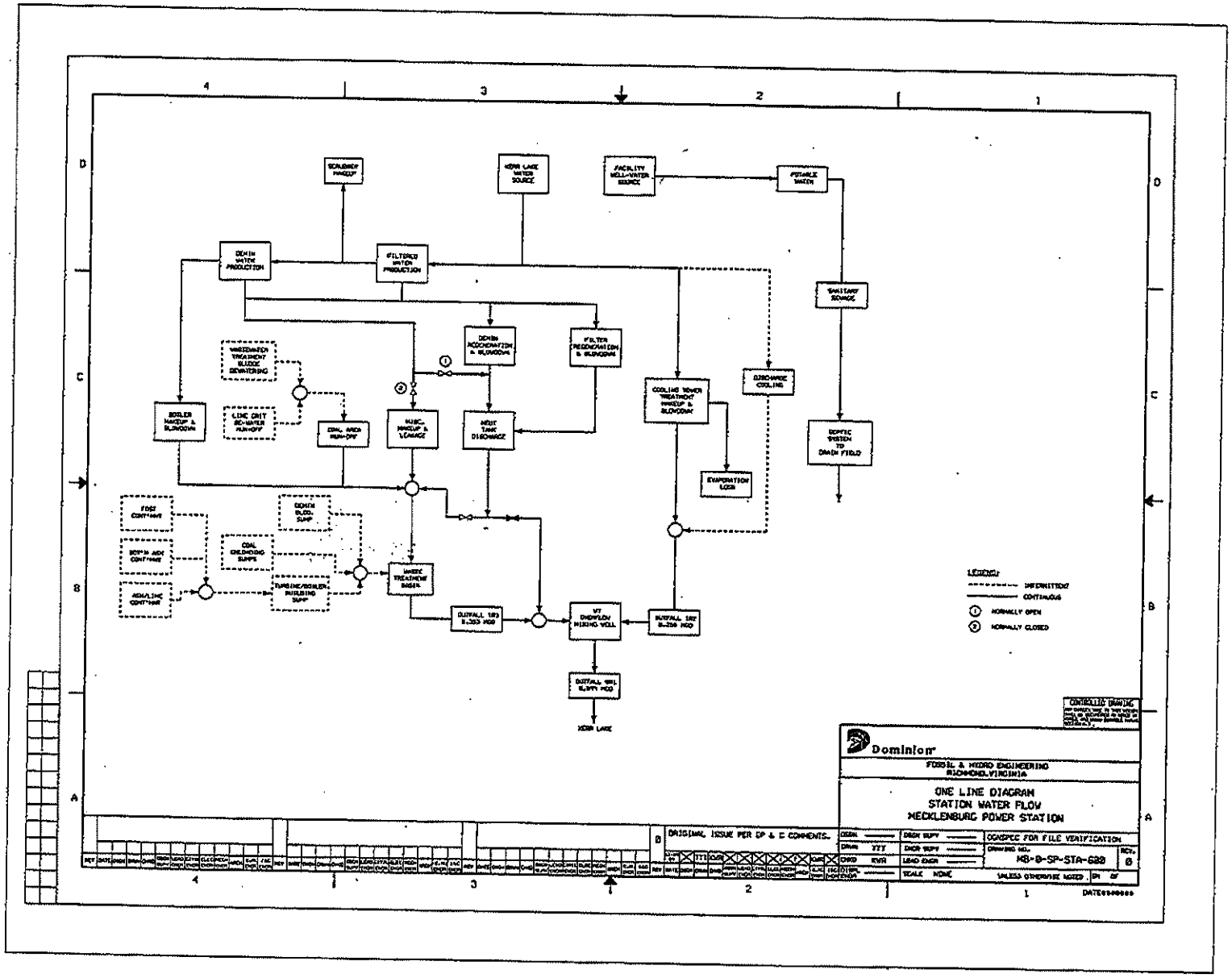


..\UNITRNENVIRONM\STA600.DGN 1/21/2010 11:43:33 AM