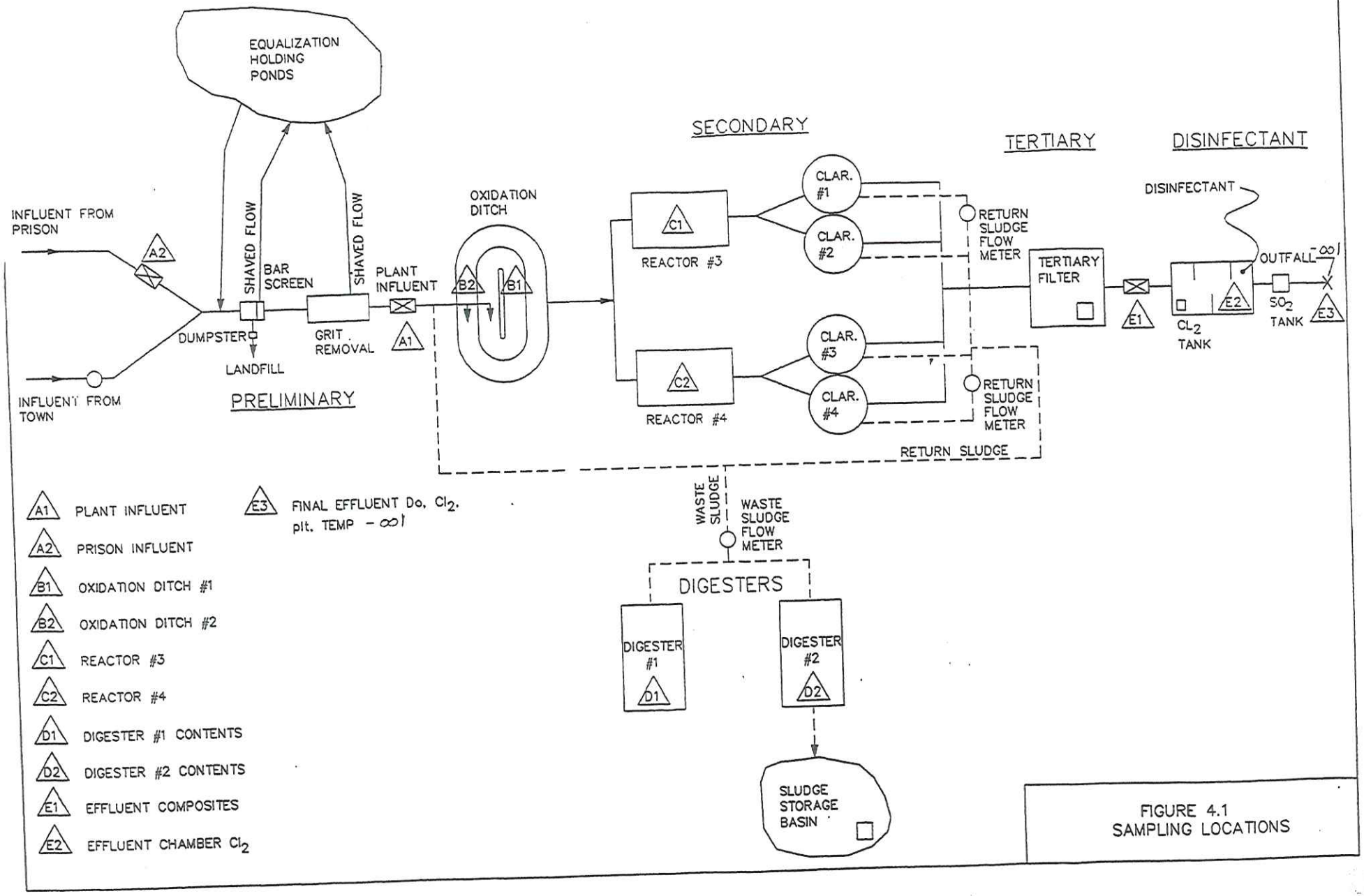

FIGURE 4.1
SAMPLING LOCATIONS