ESS

Environmental Systems Service, Ltd.

VA DEPARTMENT OF ENVIRONMENTAL QUALITY
NORTHERN
DEC 17 2012
REGIONAL OFFICE
WOODBRIDGE, VA

December 3, 2012

Mrs. April Young
Virginia DEQ – Northern Regional Office
13901 Crown Court
Woodbridge, VA 22193

RE: Evergreen Country Club STP Permit Application – VA0087891

Dear April,

Enclosed please find the original and five copies of the permit application forms for the above referenced facility. Should you have any questions or comments please feel free to contact me at (540) 825-6660.

Best Regards,

Cody Hoehna, Operations Manager
Environmental Services Division

Enclosures

218 North Main Street • P.O. Box 520 • Culpeper, VA 22701 • Telephone 540-825-6660 • Fax 540-825-4961 • www.ess-services.com

FACILITY NAME AND PERMIT NUMBER:
Evergreen Country Club VA0087891

VA DEPARTMENT OF ENVIRONMENTAL QUALITY
DEC 17 2012
REGIONAL OFFICE

Form Approved 1/14/99
OMB Number 2040-0086

FORM 2A NPDES

NPDES FORM 2A APPLICATION OVERVIEW

APPLICATION OVERVIEW

Form 2A has been developed in a modular format and consists of a "Basic Application Information" packet and a "Supplemental Application Information" packet. The Basic Application Information packet is divided into two parts. All applicants must complete Parts A and C. Applicants with a design flow greater than or equal to 0.1 mgd must also complete Part B. Some applicants must also complete the Supplemental Application Information packet. The following items explain which parts of Form 2A you must complete.

BASIC APPLICATION INFORMATION:

A. **Basic Application Information for all Applicants.** All applicants must complete questions A.1 through A.8. A treatment works that discharges effluent to surface waters of the United States must also answer questions A.9 through A.12.

B. **Additional Application Information for Applicants with a Design Flow ≥ 0.1 mgd.** All treatment works that have design flows greater than or equal to 0.1 million gallons per day must complete questions B.1 through B.6.

C. **Certification.** All applicants must complete Part C (Certification).

SUPPLEMENTAL APPLICATION INFORMATION:

D. **Expanded Effluent Testing Data.** A treatment works that discharges effluent to surface waters of the United States and meets one or more of the following criteria must complete Part D (Expanded Effluent Testing Data):

1. Has a design flow rate greater than or equal to 1 mgd,
2. Is required to have a pretreatment program (or has one in place), or
3. Is otherwise required by the permitting authority to provide the information.

E. **Toxicity Testing Data.** A treatment works that meets one or more of the following criteria must complete Part E (Toxicity Testing Data):

1. Has a design flow rate greater than or equal to 1 mgd,
2. Is required to have a pretreatment program (or has one in place), or
3. Is otherwise required by the permitting authority to submit results of toxicity testing.

F. **Industrial User Discharges and RCRA/CERCLA Wastes.** A treatment works that accepts process wastewater from any significant industrial users (SIUs) or receives RCRA or CERCLA wastes must complete Part F (Industrial User Discharges and RCRA/CERCLA Wastes). SIUs are defined as:

1. All industrial users subject to Categorical Pretreatment Standards under 40 Code of Federal Regulations (CFR) 403.6 and 40 CFR Chapter I, Subchapter N (see instructions); and
2. Any other industrial user that:
   a. Discharges an average of 25,000 gallons per day or more of process wastewater to the treatment works (with certain exclusions); or
   b. Contributes a process wastestream that makes up 5 percent or more of the average dry weather hydraulic or organic capacity of the treatment plant; or
   c. Is designated as an SIU by the control authority.

G. **Combined Sewer Systems.** A treatment works that has a combined sewer system must complete Part G (Combined Sewer Systems).

ALL APPLICANTS MUST COMPLETE PART C (CERTIFICATION)

FACILITY NAME AND PERMIT NUMBER:
Evergreen Country Club VA0087891

Form Approved 1/14/99
OMB Number 2040-0086

BASIC APPLICATION INFORMATION

PART A. BASIC APPLICATION INFORMATION FOR ALL APPLICANTS:

All treatment works must complete questions A.1 through A.8 of this Basic Application Information packet.

A.1. Facility Information.

Facility name: Evergreen Country Club

Mailing Address: P.O. Box 176
Haymarket, VA 22069

Contact person: Bryan Dolieslager

Title: Club Manager

Telephone number: (703) 754-4125

Facility Address (not P.O. Box): East Side of SR 600. Approximately 1.5 miles south of SR 701

A.2. Applicant Information. If the applicant is different from the above, provide the following:

Applicant name: Environmental Systems Service, LTD

Mailing Address: 218 N. Main Street
Culpeper, VA 22701

Contact person: Cody Hoehna

Title: Operations Manager

Telephone number: (540) 825-6660

Is the applicant the owner or operator (or both) of the treatment works?

____ owner ✓ operator

Indicate whether correspondence regarding this permit should be directed to the facility or the applicant.

____ facility ✓ applicant

A.3. Existing Environmental Permits. Provide the permit number of any existing environmental permits that have been issued to the treatment works (include state-issued permits).

NPDES	VA0087891	PSD	
UIC		Other	
RCRA		Other	

A.4. Collection System Information. Provide information on municipalities and areas served by the facility. Provide the name and population of each entity and, if known, provide information on the type of collection system (combined vs. separate) and its ownership (municipal, private, etc.).

Name	Population Served	Type of Collection System	Ownership
Evergreen - STP	300	Separate	Private

Total population served 300

A.5. Indian Country.

a. Is the treatment works located in Indian Country?

____ Yes ✓ No

b. Does the treatment works discharge to a receiving water that is either in Indian Country or that is upstream from (and eventually flows through) Indian Country?

____ Yes ✓ No

A.6. Flow. Indicate the design flow rate of the treatment plant (i.e., the wastewater flow rate that the plant was built to handle). Also provide the average daily flow rate and maximum daily flow rate for each of the last three years. Each year's data must be based on a 12-month time period with the 12th month of "this year" occurring no more than three months prior to this application submittal.

a. Design flow rate 0.0075 mgd

	Two Years Ago	Last Year	This Year	
b. Annual average daily flow rate	0.005	0.004	0.005	mgd
c. Maximum daily flow rate	0.018	0.016	0.012	mgd

A.7. Collection System. Indicate the type(s) of collection system(s) used by the treatment plant. Check all that apply. Also estimate the percent contribution (by miles) of each.

✓ Separate sanitary sewer 100 %

____ Combined storm and sanitary sewer ____ %

A.8. Discharges and Other Disposal Methods.

a. Does the treatment works discharge effluent to waters of the U.S.? ✓ Yes ____ No

If yes, list how many of each of the following types of discharge points the treatment works uses:

i. Discharges of treated effluent 1

ii. Discharges of untreated or partially treated effluent 0

iii. Combined sewer overflow points 0

iv. Constructed emergency overflows (prior to the headworks) 0

v. Other ____ 0

b. Does the treatment works discharge effluent to basins, ponds, or other surface impoundments that do not have outlets for discharge to waters of the U.S.? ____ Yes ✓ No

If yes, provide the following for each surface impoundment:

Location: ____

Annual average daily volume discharged to surface impoundment(s) ____ mgd

Is discharge ____ continuous or ____ intermittent?

c. Does the treatment works land-apply treated wastewater? ____ Yes ✓ No

If yes, provide the following for each land application site:

Location: ____

Number of acres: ____

Annual average daily volume applied to site: ____ Mgd

Is land application ____ continuous or ____ intermittent?

d. Does the treatment works discharge or transport treated or untreated wastewater to another treatment works? ____ Yes ✓ No

If yes, describe the mean(s) by which the wastewater from the treatment works is discharged or transported to the other treatment works (e.g., tank truck, pipe).

_____

If transport is by a party other than the applicant, provide:

Transporter name: _____

Mailing Address: _____

_____

Contact person: _____

Title: _____

Telephone number: _____

For each treatment works that receives this discharge, provide the following:

Name: _____

Mailing Address: _____

_____

Contact person: _____

Title: _____

Telephone number: _____

If known, provide the NPDES permit number of the treatment works that receives this discharge. _____

Provide the average daily flow rate from the treatment works into the receiving facility. _____ mgd

e. Does the treatment works discharge or dispose of its wastewater in a manner not included in A.8.a through A.8.d above (e.g., underground percolation, well injection)? _____ Yes ✓ No

If yes, provide the following for each disposal method:

Description of method (including location and size of site(s) if applicable):

_____

Annual daily volume disposed of by this method: _____

Is disposal through this method _____ continuous or _____ intermittent?

FACILITY NAME AND PERMIT NUMBER:
Evergreen Country Club VA0087891

Form Approved 1/14/99
OMB Number 2040-0086

WASTEWATER DISCHARGES:

If you answered "yes" to question A.8.a, complete questions A.9 through A.12 **once for each outfall** (including bypass points) through which effluent is discharged. Do not include information on combined sewer overflows in this section. **If you answered "no" to question A.8.a**, go to Part B, "Additional Application Information for Applicants with a Design Flow Greater than or Equal to 0.1 mgd."

A.9. Description of Outfall.

a. Outfall number 001

b. Location
Haymarket (City or town, if applicable) — 22069 (Zip Code)
Prince William (County) — VA (State)
38° 52' 58" (Latitude) — 77° 39' 27" (Longitude)

c. Distance from shore (if applicable) N/A ft.

d. Depth below surface (if applicable) N/A ft.

e. Average daily flow rate 0.005 mgd

f. Does this outfall have either an intermittent or a periodic discharge? ____ Yes ✓ No (go to A.9.g.)

If yes, provide the following information:

Number of times per year discharge occurs: ____

Average duration of each discharge: ____

Average flow per discharge: ____ mgd

Months in which discharge occurs: ____

g. Is outfall equipped with a diffuser? ____ Yes ✓ No

A.10. Description of Receiving Waters.

a. Name of receiving water UT of Chestnut Lick

b. Name of watershed (if known) Bull Run

United States Soil Conservation Service 14-digit watershed code (if known): Unknown

c. Name of State Management/River Basin (if known): Potomac River

United States Geological Survey 8-digit hydrologic cataloging unit code (if known): Unknown

d. Critical low flow of receiving stream (if applicable):
acute ____ cfs chronic ____ cfs

e. Total hardness of receiving stream at critical low flow (if applicable): N/A mg/l of $CaCO_3$

FACILITY NAME AND PERMIT NUMBER:
Evergreen Country Club VA0087891

Form Approved 1/14/99
OMB Number 2040-0086

A.11. Description of Treatment.

a. What levels of treatment are provided? Check all that apply.

✓ Primary ✓ Secondary
✓ Advanced ____ Other. Describe: Tertiary SBR Process

b. Indicate the following removal rates (as applicable):

Design BOD_5 removal or Design $CBOD_5$ removal	95	%
Design SS removal	95	%
Design P removal	10	%
Design N removal	50	%
Other ____	N/A	%

c. What type of disinfection is used for the effluent from this outfall? If disinfection varies by season, please describe.

U.V. Disinfection

If disinfection is by chlorination, is dechlorination used for this outfall? ____ Yes ____ No

d. Does the treatment plant have post aeration? ✓ Yes ____ No

A.12. Effluent Testing Information. All Applicants that discharge to waters of the US must provide effluent testing data for the following parameters. Provide the indicated effluent testing required by the permitting authority for each outfall through which effluent is discharged. Do not include information on combined sewer overflows in this section. All information reported must be based on data collected through analysis conducted using 40 CFR Part 136 methods. In addition, this data must comply with QA/QC requirements of 40 CFR Part 136 and other appropriate QA/QC requirements for standard methods for analytes not addressed by 40 CFR Part 136. At a minimum, effluent testing data must be based on at least three samples and must be no more than four and one-half years apart.

Outfall number: 001

PARAMETER	MAXIMUM DAILY VALUE		AVERAGE DAILY VALUE		
	Value	Units	Value	Units	Number of Samples
pH (Minimum)	6.35	s.u.			
pH (Maximum)	8.64	s.u.			
Flow Rate	0.012	MGD	0.005	MGD	351
Temperature (Winter)	19.50	°C	12.08	°C	178
Temperature (Summer)	27.70	°C	23.55	°C	173

* For pH please report a minimum and a maximum daily value

POLLUTANT		MAXIMUM DAILY DISCHARGE		AVERAGE DAILY DISCHARGE			ANALYTICAL METHOD	ML / MDL
		Conc.	Units	Conc.	Units	Number of Samples		
CONVENTIONAL AND NONCONVENTIONAL COMPOUNDS.								
BIOCHEMICAL OXYGEN	BOD-5							
DEMAND (Report one)	CBOD-5	5	mg/L	2.58	mg/L	12	SM5210B	2 mg/L
~~FECAL COLIFORM~~ E.Coli		2419	Cl/100ml	211.18	Cl/100ml	30	SM221E	2 cl/100 ml
TOTAL SUSPENDED SOLIDS (TSS)		12	mg/L	4.68	mg/L	12	SM2540	1.0 mg/L

END OF PART A.
REFER TO THE APPLICATION OVERVIEW TO DETERMINE WHICH OTHER PARTS OF FORM 2A YOU MUST COMPLETE

BASIC APPLICATION INFORMATION

PART B. ADDITIONAL APPLICATION INFORMATION FOR APPLICANTS WITH A DESIGN FLOW GREATER THAN OR EQUAL TO 0.1 MGD (100,000 gallons per day).

All applicants with a design flow rate ≥ 0.1 mgd must answer questions B.1 through B.6. All others go to Part C (Certification).

B.1. Inflow and Infiltration. Estimate the average number of gallons per day that flow into the treatment works from inflow and/or infiltration.

_____gpd

Briefly explain any steps underway or planned to minimize inflow and infiltration.

_____

_____

B.2. Topographic Map. Attach to this application a topographic map of the area extending at least one mile beyond facility property boundaries. This map must show the outline of the facility and the following information. (You may submit more than one map if one map does not show the entire area.)

a. The area surrounding the treatment plant, including all unit processes.

b. The major pipes or other structures through which wastewater enters the treatment works and the pipes or other structures through which treated wastewater is discharged from the treatment plant. Include outfalls from bypass piping, if applicable.

c. Each well where wastewater from the treatment plant is injected underground.

d. Wells, springs, other surface water bodies, and drinking water wells that are: 1) within 1/4 mile of the property boundaries of the treatment works, and 2) listed in public record or otherwise known to the applicant.

e. Any areas where the sewage sludge produced by the treatment works is stored, treated, or disposed.

f. If the treatment works receives waste that is classified as hazardous under the Resource Conservation and Recovery Act (RCRA) by truck, rail, or special pipe, show on the map where that hazardous waste enters the treatment works and where it is treated, stored, and/or disposed.

B.3. Process Flow Diagram or Schematic. Provide a diagram showing the processes of the treatment plant, including all bypass piping and all backup power sources or redundancy in the system. Also provide a water balance showing all treatment units, including disinfection (e.g, chlorination and dechlorination). The water balance must show daily average flow rates at influent and discharge points and approximate daily flow rates between treatment units. Include a brief narrative description of the diagram.

B.4. Operation/Maintenance Performed by Contractor(s).

Are any operational or maintenance aspects (related to wastewater treatment and effluent quality) of the treatment works the responsibility of a contractor? ____Yes ____No

If yes, list the name, address, telephone number, and status of each contractor and describe the contractor's responsibilities (attach additional pages if necessary).

Name: _____

Mailing Address: _____

_____

Telephone Number: _____

Responsibilities of Contractor: _____

B.5. Scheduled Improvements and Schedules of Implementation. Provide information on any uncompleted implementation schedule or uncompleted plans for improvements that will affect the wastewater treatment, effluent quality, or design capacity of the treatment works. If the treatment works has several different implementation schedules or is planning several improvements, submit separate responses to question B.5 for each. (If none, go to question B.6.)

a. List the outfall number (assigned in question A.9) for each outfall that is covered by this implementation schedule.

_____

b. Indicate whether the planned improvements or implementation schedule are required by local, State, or Federal agencies.

____Yes ____No

c If the answer to B.5.b is "Yes," briefly describe, including new maximum daily inflow rate (if applicable).

_____

d. Provide dates imposed by any compliance schedule or any actual dates of completion for the implementation steps listed below, as applicable. For improvements planned independently of local, State, or Federal agencies, indicate planned or actual completion dates, as applicable. Indicate dates as accurately as possible.

Implementation Stage	Schedule MM / DD / YYYY	Actual Completion MM / DD / YYYY
– Begin construction	___/___/_____	___/___/_____
– End construction	___/___/_____	___/___/_____
– Begin discharge	___/___/_____	___/___/_____
– Attain operational level	___/___/_____	___/___/_____

e. Have appropriate permits/clearances concerning other Federal/State requirements been obtained? ____Yes ____No

Describe briefly: _____

B.6. EFFLUENT TESTING DATA (GREATER THAN 0.1 MGD ONLY).

Applicants that discharge to waters of the US must provide effluent testing data for the following parameters. Provide the indicated effluent testing required by the permitting authority for each outfall through which effluent is discharged. Do not include information on combined sewer overflows in this section. All information reported must be based on data collected through analysis conducted using 40 CFR Part 136 methods. In addition, this data must comply with QA/QC requirements of 40 CFR Part 136 and other appropriate QA/QC requirements for standard methods for analytes not addressed by 40 CFR Part 136. At a minimum, effluent testing data must be based on at least three pollutant scans and must be no more than four and one-half years old.

Outfall Number:_____

POLLUTANT	MAXIMUM DAILY DISCHARGE		AVERAGE DAILY DISCHARGE			ANALYTICAL METHOD	ML / MDL
	Conc.	Units	Conc.	Units	Number of Samples		
CONVENTIONAL AND NONCONVENTIONAL COMPOUNDS.							
AMMONIA (as N)							
CHLORINE (TOTAL RESIDUAL, TRC)							
DISSOLVED OXYGEN							
TOTAL KJELDAHL NITROGEN (TKN)							
NITRATE PLUS NITRITE NITROGEN							
OIL and GREASE							
PHOSPHORUS (Total)							
TOTAL DISSOLVED SOLIDS (TDS)							
OTHER							

END OF PART B.
REFER TO THE APPLICATION OVERVIEW TO DETERMINE WHICH OTHER PARTS OF FORM 2A YOU MUST COMPLETE

FACILITY NAME AND PERMIT NUMBER:
Evergreen Country Club VA0087891

Form Approved 1/14/99
OMB Number 2040-0086

BASIC APPLICATION INFORMATION

PART C. CERTIFICATION

All applicants must complete the Certification Section. Refer to instructions to determine who is an officer for the purposes of this certification. All applicants must complete all applicable sections of Form 2A, as explained in the Application Overview. Indicate below which parts of Form 2A you have completed and are submitting. By signing this certification statement, applicants confirm that they have reviewed Form 2A and have completed all sections that apply to the facility for which this application is submitted.

Indicate which parts of Form 2A you have completed and are submitting:

✓ Basic Application Information packet

Supplemental Application Information packet:

_____ Part D (Expanded Effluent Testing Data)

_____ Part E (Toxicity Testing: Biomonitoring Data)

_____ Part F (Industrial User Discharges and RCRA/CERCLA Wastes)

_____ Part G (Combined Sewer Systems)

ALL APPLICANTS MUST COMPLETE THE FOLLOWING CERTIFICATION.

I certify under penalty of law that this document and all attachments were prepared under my direction or supervision in accordance with a system designed to assure that qualified personnel properly gather and evaluate the information submitted. Based on my inquiry of the person or persons who manage the system or those persons directly responsible for gathering the information, the information is, to the best of my knowledge and belief, true, accurate, and complete. I am aware that there are significant penalties for submitting false information, including the possibility of fine and imprisonment for knowing violations.

Name and official title: Bryan Dolieslager - Club Manager

Signature: [signature]

Telephone number: (703) 754-4125

Date signed: 12/10/12

Upon request of the permitting authority, you must submit any other information necessary to assess wastewater treatment practices at the treatment works or identify appropriate permitting requirements.

SEND COMPLETED FORMS TO:

FACILITY NAME AND PERMIT NUMBER:
Evergreen Country Club VA0087891

Form Approved 1/14/99
OMB Number 2040-0086

SUPPLEMENTAL APPLICATION INFORMATION

PART D. EXPANDED EFFLUENT TESTING DATA

Refer to the directions on the cover page to determine whether this section applies to the treatment works.

Effluent Testing: 1.0 mgd and Pretreatment Treatment Works. If the treatment works has a design flow greater than or equal to 1.0 mgd or it has (or is required to have) a pretreatment program, or is otherwise required by the permitting authority to provide the data, then provide effluent testing data for the following pollutants. Provide the indicated effluent testing information and any other information required by the permitting authority for each outfall through which effluent is discharged. Do not include information on combined sewer overflows in this section. All information reported must be based on data collected through analyses conducted using 40 CFR Part 136 methods. In addition, these data must comply with QA/QC requirements of 40 CFR Part 136 and other appropriate QA/QC requirements for standard methods for analytes not addressed by 40 CFR Part 136. Indicate in the blank rows provided below any data you may have on pollutants not specifically listed in this form. At a minimum, effluent testing data must be based on at least three pollutant scans and must be no more than four and one-half years old.

Outfall number: _____ (Complete once for each outfall discharging effluent to waters of the United States.)

POLLUTANT	MAXIMUM DAILY DISCHARGE				AVERAGE DAILY DISCHARGE					ANALYTICAL METHOD	ML/ MDL
	Conc.	Units	Mass	Units	Conc.	Units	Mass	Units	Number of Samples		
METALS (TOTAL RECOVERABLE), CYANIDE, PHENOLS, AND HARDNESS.											
ANTIMONY											
ARSENIC											
BERYLLIUM											
CADMIUM											
CHROMIUM											
COPPER											
LEAD											
MERCURY											
NICKEL											
SELENIUM											
SILVER											
THALLIUM											
ZINC											
CYANIDE											
TOTAL PHENOLIC COMPOUNDS											
HARDNESS (AS $CaCO_3$)											
Use this space (or a separate sheet) to provide information on other metals requested by the permit writer.											

FACILITY NAME AND PERMIT NUMBER:
Evergreen Country Club VA0087891

Form Approved 1/14/99
OMB Number 2040-0086

Outfall number: _____ (Complete once for each outfall discharging effluent to waters of the United States.)

POLLUTANT	MAXIMUM DAILY DISCHARGE				AVERAGE DAILY DISCHARGE					ANALYTICAL METHOD	ML/ MDL
	Conc.	Units	Mass	Units	Conc.	Units	Mass	Units	Number of Samples		
VOLATILE ORGANIC COMPOUNDS.											
ACROLEIN											
ACRYLONITRILE											
BENZENE											
BROMOFORM											
CARBON TETRACHLORIDE											
CLOROBENZENE											
CHLORODIBROMO-METHANE											
CHLOROETHANE											
2-CHLORO-ETHYLVINYL ETHER											
CHLOROFORM											
DICHLOROBROMO-METHANE											
1,1-DICHLOROETHANE											
1,2-DICHLOROETHANE											
TRANS-1,2-DICHLORO-ETHYLENE											
1,1-DICHLOROETHYLENE											
1,2-DICHLOROPROPANE											
1,3-DICHLORO-PROPYLENE											
ETHYLBENZENE											
METHYL BROMIDE											
METHYL CHLORIDE											
METHYLENE CHLORIDE											
1,1,2,2-TETRACHLORO-ETHANE											
TETRACHLORO-ETHYLENE											
TOLUENE											

FACILITY NAME AND PERMIT NUMBER:
Evergreen Country Club VA0087891

Form Approved 1/14/99
OMB Number 2040-0086

Outfall number: _____ (Complete once for each outfall discharging effluent to waters of the United States.)

POLLUTANT	MAXIMUM DAILY DISCHARGE				AVERAGE DAILY DISCHARGE					ANALYTICAL METHOD	ML/ MDL
	Conc.	Units	Mass	Units	Conc.	Units	Mass	Units	Number of Samples		
1,1,1-TRICHLOROETHANE											
1,1,2-TRICHLOROETHANE											
TRICHLORETHYLENE											
VINYL CHLORIDE											
Use this space (or a separate sheet) to provide information on other volatile organic compounds requested by the permit writer.											
ACID-EXTRACTABLE COMPOUNDS											
P-CHLORO-M-CRESOL											
2-CHLOROPHENOL											
2,4-DICHLOROPHENOL											
2,4-DIMETHYLPHENOL											
4,6-DINITRO-O-CRESOL											
2,4-DINITROPHENOL											
2-NITROPHENOL											
4-NITROPHENOL											
PENTACHLOROPHENOL											
PHENOL											
2,4,6-TRICHLOROPHENOL											
Use this space (or a separate sheet) to provide information on other acid-extractable compounds requested by the permit writer.											
BASE-NEUTRAL COMPOUNDS.											
ACENAPHTHENE											
ACENAPHTHYLENE											
ANTHRACENE											
BENZIDINE											
BENZO(A)ANTHRACENE											
BENZO(A)PYRENE											

FACILITY NAME AND PERMIT NUMBER:
Evergreen Country Club VA0087891

Form Approved 1/14/99
OMB Number 2040-0086

Outfall number: _____ (Complete once for each outfall discharging effluent to waters of the United States.)

POLLUTANT	MAXIMUM DAILY DISCHARGE				AVERAGE DAILY DISCHARGE					ANALYTICAL METHOD	ML/ MDL
	Conc.	Units	Mass	Units	Conc.	Units	Mass	Units	Number of Samples		
3,4 BENZO-FLUORANTHENE											
BENZO(GHI)PERYLENE											
BENZO(K)FLUORANTHENE											
BIS (2-CHLOROETHOXY) METHANE											
BIS (2-CHLOROETHYL)-ETHER											
BIS (2-CHLOROISO-PROPYL) ETHER											
BIS (2-ETHYLHEXYL) PHTHALATE											
4-BROMOPHENYL PHENYL ETHER											
BUTYL BENZYL PHTHALATE											
2-CHLORONAPHTHALENE											
4-CHLORPHENYL PHENYL ETHER											
CHRYSENE											
DI-N-BUTYL PHTHALATE											
DI-N-OCTYL PHTHALATE											
DIBENZO(A,H) ANTHRACENE											
1,2-DICHLOROBENZENE											
1,3-DICHLOROBENZENE											
1,4-DICHLOROBENZENE											
3,3-DICHLOROBENZIDINE											
DIETHYL PHTHALATE											
DIMETHYL PHTHALATE											
2,4-DINITROTOLUENE											
2,6-DINITROTOLUENE											
1,2-DIPHENYLHYDRAZINE											

FACILITY NAME AND PERMIT NUMBER:
Evergreen Country Club VA0087891

Form Approved 1/14/99
OMB Number 2040-0086

Outfall number: _____ (Complete once for each outfall discharging effluent to waters of the United States.)

POLLUTANT	MAXIMUM DAILY DISCHARGE				AVERAGE DAILY DISCHARGE					ANALYTICAL METHOD	ML/ MDL
	Conc.	Units	Mass	Units	Conc.	Units	Mass	Units	Number of Samples		
FLUORANTHENE											
FLUORENE											
HEXACHLOROBENZENE											
HEXACHLOROBUTADIENE											
HEXACHLOROCYCLO-PENTADIENE											
HEXACHLOROETHANE											
INDENO(1,2,3-CD)PYRENE											
ISOPHORONE											
NAPHTHALENE											
NITROBENZENE											
N-NITROSODI-N-PROPYLAMINE											
N-NITROSODI- METHYLAMINE											
N-NITROSODI-PHENYLAMINE											
PHENANTHRENE											
PYRENE											
1,2,4-TRICHLOROBENZENE											
Use this space (or a separate sheet) to provide information on other base-neutral compounds requested by the permit writer.											
Use this space (or a separate sheet) to provide information on other pollutants (e.g., pesticides) requested by the permit writer.											

END OF PART D.
REFER TO THE APPLICATION OVERVIEW TO DETERMINE WHICH OTHER PARTS OF FORM 2A YOU MUST COMPLETE

FACILITY NAME AND PERMIT NUMBER:
Evergreen Country Club VA0087891

Form Approved 1/14/99
OMB Number 2040-0086

SUPPLEMENTAL APPLICATION INFORMATION

PART E. TOXICITY TESTING DATA

POTWs meeting one or more of the following criteria must provide the results of whole effluent toxicity tests for acute or chronic toxicity for each of the facility's discharge points: 1) POTWs with a design flow rate greater than or equal to 1.0 mgd; 2) POTWs with a pretreatment program (or those that are required to have one under 40 CFR Part 403); or 3) POTWs required by the permitting authority to submit data for these parameters.

- At a minimum, these results must include quarterly testing for a 12-month period within the past 1 year using multiple species (minimum of two species), or the results from four tests performed at least annually in the four and one-half years prior to the application, provided the results show no appreciable toxicity, and testing for acute and/or chronic toxicity, depending on the range of receiving water dilution. Do not include information on combined sewer overflows in this section. All information reported must be based on data collected through analysis conducted using 40 CFR Part 136 methods. In addition, this data must comply with QA/QC requirements of 40 CFR Part 136 and other appropriate QA/QC requirements for standard methods for analytes not addressed by 40 CFR Part 136.
- In addition, submit the results of any other whole effluent toxicity tests from the past four and one-half years. If a whole effluent toxicity test conducted during the past four and one-half years revealed toxicity, provide any information on the cause of the toxicity or any results of a toxicity reduction evaluation, if one was conducted.
- If you have already submitted any of the information requested in Part E, you need not submit it again. Rather, provide the information requested in question E.4 for previously submitted information. If EPA methods were not used, report the reasons for using alternate methods. If test summaries are available that contain all of the information requested below, they may be submitted in place of Part E.

If no biomonitoring data is required, do not complete Part E. Refer to the Application Overview for directions on which other sections of the form to complete.

E.1. Required Tests.

Indicate the number of whole effluent toxicity tests conducted in the past four and one-half years.

____chronic ____acute

E.2. Individual Test Data. Complete the following chart for each whole effluent toxicity test conducted in the last four and one-half years. Allow one column per test (where each species constitutes a test). Copy this page if more than three tests are being reported.

	Test number:_____	Test number:_____	Test number:_____
a. Test information.			
Test species & test method number			
Age at initiation of test			
Outfall number			
Dates sample collected			
Date test started			
Duration			
b. Give toxicity test methods followed.			
Manual title			
Edition number and year of publication			
Page number(s)			
c. Give the sample collection method(s) used. For multiple grab samples, indicate the number of grab samples used.			
24-Hour composite			
Grab			
d. Indicate where the sample was taken in relation to disinfection. (Check all that apply for each)			
Before disinfection			
After disinfection			
After dechlorination			

FACILITY NAME AND PERMIT NUMBER:
Evergreen Country Club VA0087891

Form Approved 1/14/99
OMB Number 2040-0086

	Test number:_____	Test number:_____	Test number:_____
e. Describe the point in the treatment process at which the sample was collected.			
Sample was collected:			
f. For each test, include whether the test was intended to assess chronic toxicity, acute toxicity, or both.			
Chronic toxicity			
Acute toxicity			
g. Provide the type of test performed.			
Static			
Static-renewal			
Flow-through			
h. Source of dilution water. If laboratory water, specify type; if receiving water, specify source.			
Laboratory water			
Receiving water			
i. Type of dilution water. It salt water, specify "natural" or type of artificial sea salts or brine used.			
Fresh water			
Salt water			
j. Give the percentage effluent used for all concentrations in the test series.			
k. Parameters measured during the test. (State whether parameter meets test method specifications)			
pH			
Salinity			
Temperature			
Ammonia			
Dissolved oxygen			
l. Test Results.			
Acute:			
Percent survival in 100% effluent	%	%	%
LC_{50}			
95% C.I.	%	%	%
Control percent survival	%	%	%
Other (describe)			

Chronic:			
NOEC	%	%	%
IC_{25}	%	%	%
Control percent survival	%	%	%
Other (describe)			
m. Quality Control/Quality Assurance.			
Is reference toxicant data available?			
Was reference toxicant test within acceptable bounds?			
What date was reference toxicant test run (MM/DD/YYYY)?			
Other (describe)			

E.3. Toxicity Reduction Evaluation. Is the treatment works involved in a Toxicity Reduction Evaluation?

____Yes____No If yes, describe: _____

_____

_____

E.4. Summary of Submitted Biomonitoring Test Information. If you have submitted biomonitoring test information, or information regarding the cause of toxicity, within the past four and one-half years, provide the dates the information was submitted to the permitting authority and a summary of the results.

Date submitted: _____ (MM/DD/YYYY)

Summary of results: (see instructions)

_____

_____

END OF PART E.
REFER TO THE APPLICATION OVERVIEW TO DETERMINE WHICH OTHER PARTS OF FORM 2A YOU MUST COMPLETE.

FACILITY NAME AND PERMIT NUMBER:
Evergreen Country Club VA0087891

Form Approved 1/14/99
OMB Number 2040-0086

SUPPLEMENTAL APPLICATION INFORMATION

PART F. INDUSTRIAL USER DISCHARGES AND RCRA/CERCLA WASTES

All treatment works receiving discharges from significant industrial users or which receive RCRA, CERCLA, or other remedial wastes must complete Part F.

GENERAL INFORMATION:

F.1. **Pretreatment Program.** Does the treatment works have, or is it subject to, an approved pretreatment program?

____Yes____No

F.2. **Number of Significant Industrial Users (SIUs) and Categorical Industrial Users (CIUs).** Provide the number of each of the following types of industrial users that discharge to the treatment works.

a. Number of non-categorical SIUs. _____

b. Number of CIUs. _____

SIGNIFICANT INDUSTRIAL USER INFORMATION:

Supply the following information for each SIU. If more than one SIU discharges to the treatment works, copy questions F.3 through F.8 and provide the information requested for each SIU.

F.3. **Significant Industrial User Information.** Provide the name and address of each SIU discharging to the treatment works. Submit additional pages as necessary.

Name: _____

Mailing Address: _____

_____

F.4. **Industrial Processes.** Describe all of the industrial processes that affect or contribute to the SIU's discharge.

_____

F.5. **Principal Product(s) and Raw Material(s).** Describe all of the principal processes and raw materials that affect or contribute to the SIU's discharge.

Principal product(s): _____

Raw material(s): _____

F.6. **Flow Rate.**

a. Process wastewater flow rate. Indicate the average daily volume of process wastewater discharged into the collection system in gallons per day (gpd) and whether the discharge is continuous or intermittent.

_____ gpd (_____continuous or _____intermittent)

b. Non-process wastewater flow rate. Indicate the average daily volume of non-process wastewater flow discharged into the collection system in gallons per day (gpd) and whether the discharge is continuous or intermittent.

_____ gpd (_____continuous or _____intermittent)

F.7. **Pretreatment Standards.** Indicate whether the SIU is subject to the following:

a. Local limits ____Yes ____No

b. Categorical pretreatment standards ____Yes ____No

If subject to categorical pretreatment standards, which category and subcategory?

_____

F.8. Problems at the Treatment Works Attributed to Waste Discharged by the SIU. Has the SIU caused or contributed to any problems (e.g., upsets, interference) at the treatment works in the past three years?

____Yes____No If yes, describe each episode.

_____

_____

RCRA HAZARDOUS WASTE RECEIVED BY TRUCK, RAIL, OR DEDICATED PIPELINE:

F.9. RCRA Waste. Does the treatment works receive or has it in the past three years received RCRA hazardous waste by truck, rail, or dedicated pipe? ____Yes ___No (go to F.12.)

F.10. Waste Transport. Method by which RCRA waste is received (check all that apply):

_____Truck _____Rail _____Dedicated Pipe

F.11. Waste Description. Give EPA hazardous waste number and amount (volume or mass, specify units).

EPA Hazardous Waste Number	Amount	Units

CERCLA (SUPERFUND) WASTEWATER, RCRA REMEDIATION/CORRECTIVE ACTION WASTEWATER, AND OTHER REMEDIAL ACTIVITY WASTEWATER:

F.12. Remediation Waste. Does the treatment works currently (or has it been notified that it will) receive waste from remedial activities?

____Yes (complete F.13 through F.15.) ____No

Provide a list of sites and the requested information (F.13 - F.15.) for each current and future site.

F.13. Waste Origin. Describe the site and type of facility at which the CERCLA/RCRA/or other remedial waste originates (or is expected to originate in the next five years).

_____

_____

_____

F.14. Pollutants. List the hazardous constituents that are received (or are expected to be received). Include data on volume and concentration, if known. (Attach additional sheets if necessary).

_____

_____

F.15. Waste Treatment.

a. Is this waste treated (or will it be treated) prior to entering the treatment works?

____Yes ____No

If yes, describe the treatment (provide information about the removal efficiency):

_____

_____

b. Is the discharge (or will the discharge be) continuous or intermittent?

____Continuous ____Intermittent If intermittent, describe discharge schedule.

_____

END OF PART F.
REFER TO THE APPLICATION OVERVIEW TO DETERMINE WHICH OTHER PARTS OF FORM 2A YOU MUST COMPLETE

FACILITY NAME AND PERMIT NUMBER:
Evergreen Country Club VA0087891

Form Approved 1/14/99
OMB Number 2040-0086

SUPPLEMENTAL APPLICATION INFORMATION

PART G. COMBINED SEWER SYSTEMS

If the treatment works has a combined sewer system, complete Part G.

G.1. System Map. Provide a map indicating the following: (may be included with Basic Application Information)

a. All CSO discharge points.

b. Sensitive use areas potentially affected by CSOs (e.g., beaches, drinking water supplies, shellfish beds, sensitive aquatic ecosystems, and outstanding natural resource waters).

c. Waters that support threatened and endangered species potentially affected by CSOs.

G.2. System Diagram. Provide a diagram, either in the map provided in G.1. or on a separate drawing, of the combined sewer collection system that includes the following information:

a. Locations of major sewer trunk lines, both combined and separate sanitary.

b. Locations of points where separate sanitary sewers feed into the combined sewer system.

c. Locations of in-line and off-line storage structures.

d. Locations of flow-regulating devices.

e. Locations of pump stations.

CSO OUTFALLS:

Complete questions G.3 through G.6 once for each CSO discharge point.

G.3. Description of Outfall.

a. Outfall number _____

b. Location _____
(City or town, if applicable) (Zip Code)

_____
(County) (State)

_____
(Latitude) (Longitude)

c. Distance from shore (if applicable) _____ft.

d. Depth below surface (if applicable) _____ft.

e. Which of the following were monitored during the last year for this CSO?

____Rainfall ____CSO pollutant concentrations ____CSO frequency

____CSO flow volume ____Receiving water quality

f. How many storm events were monitored during the last year? _____

G.4. CSO Events.

a. Give the number of CSO events in the last year.

_____ events (___ actual or ___ approx.)

b. Give the average duration per CSO event.

_____ hours (____ actual or ____ approx.)

c. Give the average volume per CSO event.

_____ million gallons (_____ actual or _____ approx.)

d. Give the minimum rainfall that caused a CSO event in the last year.

_____ inches of rainfall

G.5. Description of Receiving Waters.

a. Name of receiving water: _____

b. Name of watershed/river/stream system: _____

United States Soil Conservation Service 14-digit watershed code (if known): _____

c. Name of State Management/River Basin: _____

United States Geological Survey 8-digit hydrologic cataloging unit code (if known): _____

G.6. CSO Operations.

Describe any known water quality impacts on the receiving water caused by this CSO (e.g., permanent or intermittent beach closings, permanent or intermittent shell fish bed closings, fish kills, fish advisories, other recreational loss, or violation of any applicable State water quality standard).

_____

_____

END OF PART G.
REFER TO THE APPLICATION OVERVIEW TO DETERMINE WHICH OTHER PARTS OF FORM 2A YOU MUST COMPLETE.

VPDES SEWAGE SLUDGE PERMIT APPLICATION FORM

SCREENING INFORMATION

This application is divided into sections. Sections A pertain to all applicants. The applicability of Sections B, C and D depend on your facility's sewage sludge use or disposal practices. The information provided on this page will help you determine which sections to fill out.

VA DEPARTMENT OF ENVIRONMENTAL QUALITY
NORTHERN
DEC 17 2012
REGIONAL OFFICE
WOODBRIDGE, VA

1. All applicants must complete Section A (General Information).

2. Will this facility generate sewage sludge? _X_ Yes __ No Septage is produced in the septic tank

   Will this facility derive a material from sewage sludge? __Yes _X_ No

   If you answered Yes to either, complete Section B (Generation Of Sewage Sludge Or Preparation Of A Material Derived From Sewage Sludge).

3. Will this facility apply sewage sludge to the land? __Yes _X_ No

   Will sewage sludge from this facility be applied to the land? __Yes _X_ No

   If you answered No to both questions above, skip Section C.

   If you answered Yes to either, answer the following three questions:

   a. Will the sewage sludge from this facility meet the ceiling concentrations, pollutant concentrations, Class A pathogen reduction requirements and one of the vector attraction reduction requirements 1-8, as identified in the instructions?
      __Yes __No

   b. Will sewage sludge from this facility be placed in a bag or other container for sale or give-away for application to the land? __Yes __No

   c. Will sewage sludge from this facility be sent to another facility for treatment or blending? __Yes __No

   If you answered No to all three, complete Section C (Land Application Of Bulk Sewage Sludge).

   If you answered Yes to a, b or c, skip Section C.

4. Do you own or operate a surface disposal site? __Yes _X_ No

   If Yes, complete Section D (Surface Disposal).

SECTION A. GENERAL INFORMATION

All applicants must complete this section.

1. Facility Information.
   a. Facility name: Evergreen Country Club
   b. Contact person: Bryan Dolieslager
      Title: Club Manager
      Phone: (703) 754-4125
   c. Mailing address:
      Street or P.O. Box: P.O. Box 176
      City or Town: Haymarket State: VA Zip: 22069
   d. Facility location:
      Street or Route #: East Side of SR 600, 1.5 miles south of SR 701
      County: Prince William
      City or Town: Haymarket State: VA Zip: 22069
   e. Is this facility a Class I sludge management facility? ___Yes _X_ No
   f. Facility design flow rate: 0.0075 mgd
   g. Total population served: 300
   h. Indicate the type of facility:
      ___ Publicly owned treatment works (POTW)
      _X_ Privately owned treatment works
      ___ Federally owned treatment works
      ___ Blending or treatment operation
      ___ Surface disposal site
      ___ Other (describe): _____

2. Applicant Information. If the applicant is different from the above, provide the following:
   a. Applicant name: Environmental Systems Service
   b. Mailing address:
      Street or P.O. Box: 218 North Main Street
      City or Town: Culpeper State: VA Zip: 22701
   c. Contact person: Cody Hoehna
      Title: Operations Manager

      Phone: (540) 825-6660
   d. Is the applicant the owner or operator (or both) of this facility?
      _____owner _X_ operator
   e. Should correspondence regarding this permit be directed to the facility or the applicant? (Check one)
      _____ facility _X_ applicant

3. Permit Information.
   a. Facility's VPDES permit number (if applicable): VA0087891
   b. List on this form or an attachment, all other federal, state or local permits or construction approvals received or applied for that regulate this facility's sewage sludge management practices:

Permit Number:	Type of Permit:
N/A	

4. Indian Country. Does any generation, treatment, storage, application to land or disposal of sewage sludge from this facility occur in Indian Country? ___Yes _X_ No If yes, describe:

_____

5. Topographic Map. Provide a topographic map or maps (or other appropriate maps if a topographic map is unavailable) that shows the following information. Maps should include the area one mile beyond all property boundaries of the facility: See Attachment 1
   a. Location of all sewage sludge management facilities, including locations where sewage sludge is generated, stored, treated, or disposed.
   b. Location of all wells, springs, and other surface water bodies listed in public records or otherwise known to the applicant within 1/4 mile of the property boundaries.

6. Line Drawing. Provide a line drawing and/or a narrative description that identifies all sewag e sludge processes that will be employed during the term of the permit including all processes used for collecting, dewatering, storing, or treating sewage sludge, the destination(s) of all liquids and solids leaving each unit, and all methods used for pathogen reduction and vector attraction reduction. See Attachment 2 A & B

7. Contractor Information. Are any operational or maintenance aspects of this facility related to sewage sludge generation, treatment, use or disposal the responsibility of a contractor? X Yes__ No
   If yes, provide the following for each contractor (attach additional pages if necessary).
   Name: Advantage Septic Service
   Mailing address:
   Street or P.O. Box: 8016 Hillcrest Drive
   City or Town: Manassas State: VA Zip: 20111
   Phone: (703) 392-7070
   Contractor's Federal, State or Local Permit Number(s) applicable to this facility's sewage sludge:
   Local Permit Number 175-004
   If the contractor is responsible for the use and/or disposal of the sewage sludge, provide a description of the service to be provided to the applicant and the respective obligations of the applicant and the contractor(s).

8. Pollutant Concentrations. Using the table below or a separate attachment, provide sewage sludge monitoring data for the pollutants which limits in sewage sludge have been established in 9 VAC 25-31-10 et seq. for this facility's expected use or disposal practices. All data must be based on three or more samples taken at least one month apart and must be no more than four and one-half years old. N/A

POLLUTANT	CONCENTRATION (mg/kg dry weight)	SAMPLE DATE	ANALYTICAL METHOD	DETECTION LEVEL FOR ANALYSIS
Arsenic				
Cadmium				
Chromium				
Copper				
Lead				
Mercury				
Molybdenum				
Nickel				
Selenium				
Zinc				

9. Certification. Read and submit the following certification statement with this application. Refer to the instructions to determine who is an officer for purposes of this certification. Indicate which parts of the application you have completed and are submitting:

   _X_ Section A (General Information)
   _X_ Section B (Generation of Sewage Sludge or Preparation of a Material Derived from Sewage Sludge)
   ____ Section C (Land Application of Bulk Sewage Sludge)
   ____ Section D (Surface Disposal)

I certify under penalty of law that this document and all attachments were prepared under my direction or supervision in accordance with a system designed to assure that qualified personnel properly gather and evaluate the information submitted. Based on my inquiry of the person or persons who manage the system or those persons directly responsible for gathering the information, the information is, to the best of my knowledge and belief, true, accurate and complete. I am aware that there are significant penalties for submitting false information, including the possibility of fine and imprisonment for knowing violations.

Name and official title Bryan Dolieslager - Club Manager

Signature _____ Date Signed 12/10/12

Telephone number 703-754-4125

Upon request of the department, you must submit any other information necessary to assess sewage sludge use or disposal practices at your facility or identify appropriate permitting requirements.

SECTION B. GENERATION OF SEWAGE SLUDGE OR PREPARATION OF A MATERIAL DERIVED FROM SEWAGE SLUDGE

Complete this section if your facility generates sewage sludge or derives a material from sewage sludge

1. Amount Generated On Site.
   Total dry metric tons per 365-day period generated at your facility: 2.86 dry metric tons

2. Amount Received from Off Site. If your facility receives sewage sludge from another facility for treatment, use or disposal, provide the following information for each facility from which sewage sludge is received. If you receive sewage sludge from more than one facility, attach additional pages as necessary.
   a. Facility name: N/A
   b. Contact Person: _____
      Title: _____
      Phone ( ) _____
   c. Mailing address:
      Street or P.O. Box: _____
      City or Town: _____ State: _____ Zip: _____
   d. Facility Address: _____
      (not P.O. Box) _____
   e. Total dry metric tons per 365-day period received from this facility: _____ dry metric tons
   f. Describe, on this form or on another sheet of paper, any treatment processes known to occur at the off-site facility, including blending activities and treatment to reduce pathogens or vector attraction characteristics:
      _____
      _____

3. Treatment Provided at Your Facility.
   a. Which class of pathogen reduction is achieved for the sewage sludge at your facility?
      ___Class A ___ Class X Neither or unknown
   b. Describe, on this form or another sheet of paper, any treatment processes used at your facility to reduce pathogens in sewage sludge: Aerobic Digestion
   c. Which vector attraction reduction option is met for the sewage sludge at your facility?
      ___ Option 1 (Minimum 38 percent reduction in volatile solids)
      ___ Option 2 (Anaerobic process, with bench-scale demonstration)
      ___ Option 3 (Aerobic process, with bench-scale demonstration)
      ___ Option 4 (Specific oxygen uptake rate for aerobically digested sludge)
      ___ Option 5 (Aerobic processes plus raised temperature)
      ___ Option 6 (Raise pH to 12 and retain at 11.5)
      ___ Option 7 (75 percent solids with no unstabilized solids)
      ___ Option 8 (90 percent solids with unstabilized solids)
      X None or unknown
   d. Describe, on this form or another sheet of paper, any treatment processes used at your facility to reduce vector attraction properties of sewage sludge: Aerobic Digestion
   e. Describe, on this form or another sheet of paper, any other sewage sludge treatment activities, including blending, not identified in a - d above: N/A

4. Preparation of Sewage Sludge Meeting Ceiling and Pollutant Concentrations, Class A Pathogen Requirements and One of Vector Attraction Reduction Options 1-8 (EQ Sludge).
   (If sewage sludge from your facility does not meet all of these criteria, skip Question 4.) N/A
   a. Total dry metric tons per 365-day period of sewage sludge subject to this section that is applied to the land: _____ dry metric tons
   b. Is sewage sludge subject to this section placed in bags or other containers for sale or give-away?

__Yes __No

5. Sale or Give-Away in a Bag or Other Container for Application to the Land.

(Complete this question if you place sewage sludge in a bag or other container for sale or give-away prior to land application. Skip this question if sewage sludge is covered in Question 4.)

a. Total dry metric tons per 365-day period of sewage sludge placed in a bag or other container at your facility for sale or give-away for application to the land:_____ dry metric tons

b. Attach, with this application, a copy of all labels or notices that accompany the sewage sludge being sold or given away in a bag or other container for application to the land.

6. Shipment Off Site for Treatment or Blending.

(Complete this question if sewage sludge from your facility is sent to another facility that provides treatment or blending. This question does not apply to sewage sludge sent directly to a land application or surface disposal site. Skip this question if the sewage sludge is covered in Questions 4 or 5. If you send sewage sludge to more than one facility, attach additional sheets as necessary.)

a. Receiving facility name: Upper Occoquan Sewage Authority

b. Facility contact: Jack Sellman
Title: Process Director
Phone: (703) 830-2200

c. Mailing address:
Street or P.O. Box: 14631 Compton Road
City or Town: Centerville State: VA Zip: 20121

d. Total dry metric tons per 365-day period of sewage sludge provided to receiving facility:_____ dry metric tons

e. List, on this form or an attachment, the receiving facility's VPDES permit number as well as the numbers of all other federal, state or local permits that regulate the receiving facility's sewage sludge use or disposal practices:

Permit Number:	Type of Permit:
VA0024788	VPDES

f. Does the receiving facility provide additional treatment to reduce pathogens in sewage sludge from your facility? X Yes __ No
Which class of pathogen reduction is achieved for the sewage sludge at the receiving facility?
__Class A X Class B __ Neither or unknown
Describe, on this form or another sheet of paper, any treatment processes used at the receiving facility to reduce pathogens in sewage sludge: Aerobic Digetion

g. Does the receiving facility provide additional treatment to reduce vector attraction characteristics of the sewage sludge? X Yes __ No
Which vector attraction reduction option is met for the sewage sludge at the receiving facility?
X Option 1 (Minimum 38 percent reduction in volatile solids)
__ Option 2 (Anaerobic process, with bench-scale demonstration)
__ Option 3 (Aerobic process, with bench-scale demonstration)
__ Option 4 (Specific oxygen uptake rate for aerobically digested sludge)
__ Option 5 (Aerobic processes plus raised temperature)
__ Option 6 (Raise pH to 12 and retain at 11.5)
__ Option 7 (75 percent solids with no unstabilized solids)
__ Option 8 (90 percent solids with unstabilized solids)
__ None unknown
Describe, on this form or another sheet of paper, any treatment processes used at the receiving facility to reduce vector attraction properties of sewage sludge: Aerobic Digestion

h. Does the receiving facility provide any additional treatment or blending not identified in f or g above?
__Yes X No
If yes, describe, on this form or another sheet of paper, the treatment processes not identified in f or g above:

i. If you answered yes to f., g or h above, attach a copy of any information you provide to the receiving facility

to comply with the "notice and necessary information" requirement of 9 VAC 25-31-530.G. See Attachment 3

j Does the receiving facility place sewage sludge from your facility in a bag or other container for sale or give-away for application to the land? ___Yes _X No
If yes, provide a copy of all labels or notices that accompany the product being sold or given away.

k. Will the sewage sludge be transported to the receiving facility in a truck-mounted watertight tank normally used for such purposes? _X Yes ___ No. If no, provide description and specification on the vehicle used to transport the sewage sludge to the receiving facility.
Show the haul route(s) on a location map or briefly describe the haul route below and indicate the days of the week and the times of the day sewage sludge will be transported. __See Attachment 4

7. Land Application of Bulk Sewage Sludge. N/A

(Complete Question 7.a if sewage sludge from your facility is applied to the land, unless the sewage sludge is covered in Questions 4, 5 or 6; complete Question 7.b, c & d only if you are responsible for land application of sewage sludge.)

a. Total dry metric tons per 365-day period of sewage sludge applied to all land application sites:_____dry metric tons

b. Do you identify all land application sites in Section C of this application? ___Yes ___No
If no, submit a copy of the Land Application Plan (LAP) with this application (LAP should be prepared in accordance with the instructions).

c. Are any land application sites located in States other than Virginia? ___Yes ___No
If yes, describe, on this form or on another sheet of paper, how you notify the permitting authority for the States where the land application sites are located. Provide a copy of the notification.

d. Attach a copy of any information you provide to the owner or lease holder of the land application sites to comply with the "notice and necessary" information requirement of 9 VAC 25-31-530 F and/or H (Examples may be obtained in Appendix IV).

8. Surface Disposal. N/A

(Complete Question 8 if sewage sludge from your facility is placed on a surface disposal site.)

a. Total dry metric tons per 365-day period of sewage sludge from your facility placed on all surface disposal sites: _____ dry metric tons

b. Do you own or operate all surface disposal sites to which you send sewage sludge for disposal?
___Yes ___No
If no, answer questions c - g for each surface disposal site that you do not own or operate. If you send sewage sludge to more than one surface disposal site, attach additional pages as necessary.

c. Site name or number: _____

d. Contact person: _____
Title: _____
Phone: ( )_____
Contact is: ___Site Owner ___Site operator

e. Mailing address.
Street or P.O. Box:_____
City or Town:_____ State:_____ Zip:_____

f. Total dry metric tons per 365-day period of sewage sludge from your facility placed on this surface disposal site: _____ dry metric tons

g. List, on this form or an attachment, the surface disposal site VPDES permit number as well as the numbers of all other federal, state or local permits that regulate the sewage sludge use or disposal practices at the surface disposal site:

Permit Number:	Type of Permit:
_____	_____
_____	_____

9. Incineration. N/A

(Complete Question 9 if sewage sludge from your facility is fired in a sewage sludge incinerator.)

a. Total dry metric tons per 365-day period of sewage sludge from your facility fired in a sewage sludge incinerator: _____ dry metric tons

b. Do you own or operate all sewage sludge incinerators in which sewage sludge from your facility is fired?
___Yes ___No
If no, answer questions c - g for each sewage sludge incinerator that you do not own or operate. If you send sewage sludge to more than one sewage sludge incinerator, attach additional pages as necessary.

c. Incinerator name or number: _____

d. Contact person: _____
Title: _____
Phone: ( ) _____
Contact is: ___Incinerator Owner ___Incinerator Operator

e. Mailing address.
Street or P.O. Box: _____
City or Town: _____ State: _____ Zip: _____

f. Total dry metric tons per 365-day period of sewage sludge from your facility fired in this sewage sludge incinerator: _____ dry metric tons

g. List on this form or an attachment the numbers of all other federal, state or local permits that regulate the firing of sewage sludge at this incinerator:

Permit Number:	Type of Permit:
_____	_____
_____	_____

10. Disposal in a Municipal Solid Waste Landfill.

(Complete Question 10 if sewage sludge from your facility is placed on a municipal solid waste landfill. Provide the following information for each municipal solid waste landfill on which sewage sludge from your facility is placed. If sewage sludge is placed on more than one municipal solid waste landfill, attach additional pages as necessary.)

a. Landfill name: _____

b. Contact person: _____
Title: _____
Phone: ( ) _____
Contact is: ___Landfill Owner ___Landfill Operator

c. Mailing address.
Street or P.O. Box: _____
City or Town: _____ State: _____ Zip: _____

d. Landfill location.
Street or Route #: _____
County: _____
City or Town: _____ State: _____ Zip: _____

e. Total dry metric tons per 365-day period of sewage sludge placed in this municipal solid waste landfill:
_____ dry metric tons

f. List, on this form or an attachment, the numbers of all federal, state or local permits that regulate the operation of this municipal solid waste landfill:

Permit Number:	Type of Permit:
_____	_____
_____	_____

g. Does sewage sludge meet applicable requirements in the Virginia Solid Waste Management Regulation, 9 VAC 20-80-10 et seq., concerning the quality of materials disposed in a municipal solid waste landfill?
___Yes ___No

h. Does the municipal solid waste landfill comply with all applicable criteria set forth in the Virginia S olid Waste Management Regulation, 9 VAC 20-80-10 et seq.? ___Yes ___No

i. Will the vehicle bed or other container used to transport sewage sludge to the municipal solid waste landfill be watertight and covered? ___ Yes ___ No
Show the haul route(s) on a location map or briefly describe the route below and indicate the days of the week and time of the day sewage sludge will be transported. _____
_____

SECTION C. LAND APPLICATION OF BULK SEWAGE SLUDGE

Complete this section for sewage sludge that is land applied unless any of the following conditions apply: N/A

The sewage sludge meets the Table 1 ceiling concentrations, the Table 3 pollutant concentrations, Class A pathogen requirements and one of the vector attraction reduction options 1-8 (fill out B.4 instead) (EQ Sludge); or

The sewage sludge is sold or given away in a bag or other container for application to the land (fill out B.5 instead); or

You provide the sewage sludge to another facility for treatment or blending (fill out B.6 instead).

Complete Section C for every site on which the sewage sludge that you reported in B.7 is land applied.

1. Identification of Land Application Site.
   a. Site name or number: _____
   b. Site location (Complete i and ii)
      i. Street or Route#: _____
         County: _____
         City or Town: _____ State: _____ Zip: _____
      ii. Latitude: _____ Longitude: _____
         Method of latitude/longitude determination
         ___ USGS map ___ Filed survey ___ Other
   c. Topographic map. Provide a topographic map (or other appropriate map if a topographic map is unavailable) that shows the site location.

2. Owner Information.
   a. Are you the owner of this land application site? ___Yes ___No
   b. If no, provide the following information about the owner:
      Name: _____
      Street or P.O. Box: _____
      City or Town: _____ State: _____ Zip: _____
      Phone: ( ) _____

3. Applier Information:
   a. Are you the person who applies, or who is responsible for application of, sewage sludge to this land application site? ___Yes ___No
   b. If no, provide the following information for the person who applies the sewage sludge:
      Name: _____
      Street or P.O. Box: _____
      City or Town: _____ State: _____ Zip: _____
      Phone: ( ) _____
   c. List, on this form or an attachment, the numbers of all federal, state or local permits that regulate the person who applies sewage sludge to this land application site:

~~Permit Number:~~	~~Type of Permit:~~

4. Site Type. Identify the type of land application site from among the following:
   ___Agricultural land ___Reclamation site ___Forest
   ___Public contact site ___Other. Describe _____

5. Vector Attraction Reduction.
   Are any vector attraction reduction requirements met when sewage sludge is applied to the land application site?
   ___Yes ___No If yes, answer a and b.
   a. Indicate which vector attraction reduction option is met:
      ___ Option 9 (Injection below land surface)
      ___ Option 10 (Incorporation into soil within 6 hours)
   b. Describe, on this form or on another sheet of paper, any treatment processes used at the land application site to reduce the vector attraction properties of sewage sludge:
      _____
      _____

6. Cumulative Loadings and Remaining Allotments.

(Complete Question 6 only if the sewage sludge applied to this site since July 20, 1993 is subject to the cumulative pollutant loading rates (CPLRs) - see instructions.)

a. Have you contacted DEQ or the permitting authority in the state where the sewage sludge subject to the CPLRs will be applied to ascertain whether bulk sewage sludge subject to the CPLRs has been applied to this site since July 20, 1993? __Yes __No

If no, sewage sludge subject to the CPLRs may not be applied to this site.

If yes, provide the following information:

Permitting authority: _____

Contact person: _____

Phone: ( ) _____

b. Based upon this inquiry, has bulk sewage sludge subject to the CPLRs been applied to this site since July 20, 1993? __Yes __No If no, skip the rest of Question 6. If yes, answer questions c - e.

c. Site size, in hectares: _____ (one hectare = 2.471 acres)

d. Provide the following information for every facility other than yours that is sending or has sent sewage sludge subject to the CPLRs to this site since July 20, 1993. If more than one such facility sends sewage sludge to this site, attach additional pages as necessary.

Facility name: _____

Facility contact: _____

Title: _____

Phone: ( ) _____

Mailing address.

Street or P.O. Box: _____

City or Town: _____ State: _____ Zip: _____

e. Provide the total loading and allotment remaining, in kg/hectare, for each of the following pollutants:

	Cumulative loading	Allotment remaining
Arsenic	_____	_____
Cadmium	_____	_____
Copper	_____	_____
Lead	_____	_____
Mercury	_____	_____
Nickel	_____	_____
Selenium	_____	_____
Zinc	_____	_____

Complete Questions 7-12 below only if you apply sewage sludge, or you are responsible for land application of sewage sludge. Information required by these questions may be prepared as attachments to this form. Skip the following questions if you contract land application to someone else (as indicated under Section A.7) who is responsible for the operation.

7. Sludge Characterization. Use the table below or a separate attachment, provide at least one analysis for each parameter.

PCBs (mg/kg)	_____
pH (S. U.)	_____
Percent Solids (%)	_____
Ammonium Nitrogen (mg/kg)	_____
Nitrate Nitrogen (mg/kg)	_____
Total Kjeldahl Nitrogen (mg/kg)	_____
Total Phosphorus (mg/kg)	_____
Total Potassium (mg/kg)	_____
Alkalinity as $CaCO_3$ (mg/kg)	_____

* Lime treated sludge (10% or more lime by dry weight) should be analyzed for percent $CaCO_3$.

8. Storage Requirements.
Existing and proposed sludge storage facilities must provide an estimated annual sludge balance on a monthly basis incorporating such factors as storage capacity, sludge production and land application schedule. Include pertinent calculations justifying storage requirements.
Proposed sludge storage facilities must also provide the following information:
   a. A sludge storage site layout on a 7.5 minute topographic quadrangle or other appropriate scaled map to show the following topographic features of the surrounding landscape to a distance of 0.25 mile. Clearly mark the property line.
      1) Water wells, abandoned or operating
      2) Surface waters
      3) Springs
      4) Public water supply(s)
      5) Sinkholes
      6) Underground and/or surface mines
      7) Mine pool (or other) surface water discharge points
      8) Mining spoil piles and mine dumps
      9) Quarry(s)
      10) Sand and gravel pits
      11) Gas and oil wells
      12) Diversion ditch(s)
      13) Agricultural drainage ditch(s)
      14) Occupied dwellings, including industrial and commercial establishments
      15) Landfills or dumps
      16) Other unlined impoundments
      17) Septic tanks and drainfields
      18) Injection wells
      19) Rock outcrops
   b. A topographic map of sufficient detail to clearly show the following information:
      1) Maximum and minimum percent slopes
      2) Depressions on the site that may collect water
      3) Drainageways that may attribute to rainfall run-on to or runoff from this site
      4) Portions of the site (if any) which are located with the 100-year floodplain and how the storage facility will be protected from flooding
   c. Data and specifications for the storage facility lining material.
   d. Plan and cross-sectional views of the storage facility.
   e. Depth from the bottom of the storage facility to the seasonal high water table and separation distance to the permanent water table.

9. Land Area Requirements. Provide calculations justifying the land area requirements for land application of sewage sludge taking into consideration average soil productivity group, crop(s) to be grown and most limiting factor(s) of the sewage sludge, specifically Plant Available Nitrogen (PAN), Calcium Carbonate Equivalence (CCE), and metal loadings (CPLR sewage sludge only), where applicable. Relate PAN, CCE, and metal loadings to demonstrate the most limiting factor for land application.

10. Landowner Agreement Forms. Provide a properly completed Sewage Sludge Application Agreement Form (attached) for each landowner if sewage sludge is to be applied onto land not owned by the applicant.

11. Ground Water Monitoring.
Are any ground water monitoring data available for this land application site? ___Yes ___No
If yes, submit the ground water monitoring data with this permit application. Also submit a written description of the well locations, approximate depth to ground water, and the ground water monitoring procedures used to obtain these data.

12. Land Application Site Information.
(Complete Items a-d for sites receiving infrequent application - land application of sewage sludge up to the agronomic rate at a frequency of once in a 3 year period; complete Items a-h for sites receiving frequent application - land application of sewage sludge in excess of 70% the agronomic rate at a frequency greater than once in a 3 year period)

a. Provide a general location map for each county which clearly indicates the location of all the land application sites.

b. For each land application site provide a site plan of sufficient detail to clearly show the concerned landscape features and associated buffer zones (See instructions). Provide a legend for each landscape feature and the net acreage for each field taking into account the proposed buffer zones.

c. In order to ensure that land application of bulk sewage sludge will not impact federally listed threatened or endangered species or federally designated critical habitat, the applicant must notify the field office of the U. S. Department of the Interior, Fish and Wildlife Service (FWS), by a letter, the proposed land application activities with the identification of the land application sites. The address and phone number of FWS are provided below.

U. S. Fish and Wildlife Service
Ecological Services
6669 Short Lane
Gloucester, VA 23061
TEL: (804) 693-6694

Provide a copy of the notification letter with this application form.

d. Provide a soil survey map, preferably photographically based, with the field boundaries clearly marked. (A USDA-SCS soil survey map should be provided, if available.)
Provide a detailed legend for each soil survey map which uses accepted USDA-SCS descriptions of the typifying pedon for each soil series (soil type). Complex associations may be described as a range of characteristics. Soil descriptions shall include as a minimum the following information.

1) Soil symbol
2) Soil series, textural phase and slope range
3) Depth to seasonal high water table
4) Depth to bedrock
5) Estimated soil productivity group (for the proposed crop rotation)

Item e - h are required for sites receiving frequent application of sewage sludge

e. In order to verify the information provided in item d, characterize the soil at each land application site. Representative soil borings or test pits to a depth of five feet or to bedrock if shallower, are to be coordinated for the typifying pedon of each soil series (soil type). Soil descriptions shall include as a minimum the following information:

1). Soil symbol
2). Soil series, textural phase and slope range
3). Depth to seasonal high water table
4). Depth to bedrock
5). Estimated soil productivity group (for the proposed crop rotation)

f. Collect and analyze soil samples from each field, weighted to best represent each of the soil borings performed for Item e. Using the table below or a separate attachment, provide at least one analysis per sample for each of the following parameters.

Soil Organic Matter (%)	_____
Soil pH (std. units)	_____
Cation Exchange Capacity (meq/100g)	_____
Total Nitrogen (ppm)	_____
Organic Nitrogen (ppm)	_____
Ammonia Nitrogen (ppm)	_____
Nitrate Nitrogen (ppm)	_____
Available Phosphorus (ppm)	_____
Exchangeable Potassium (mg/100g)	_____
Exchangeable Sodium (mg/100g)	_____
Exchangeable Calcium (mg/100g)	_____
Exchangeable Magnesium (mg/100g)	_____
Arsenic (ppm)	_____
Cadmium (ppm)	_____
Copper (ppm)	_____
Lead (ppm)	_____
Mercury (ppm)	_____
Molybdenum (ppm)	_____
Nickel (ppm)	_____
Selenium (ppm)	_____
Zinc (ppm)	_____
Manganese (ppm)	_____
Particle Size Analysis or USDA Textural Estimate (%)	_____

g. Relate the crop nutrient needs to anticipated yields, soil productivity rating and the various fertilizer or nutrient sources from sludge and chemical fertilizers. Describe any specialized agronomic management practices which may be required as a result of high soil pH. If the sludge is expected to possess an unusually high CCE or other unusual properties, provide a description of any plant tissue testing, supplemental fertilization or intensive agronomic management practices which may be necessary.

h. Using a narrative format and referencing any related charts, describe the proposed cropping system. Show how the crop rotation and management will be coordinated with the design of the land application system. Include any supplemental fertilization program, soil testing and the coordination of tillage practices, planting and harvesting schedules and timing of land application.

SEWAGE SLUDGE APPLICATION AGREEMENT

This sewage sludge application agreement is made on this date _____ between _____, referred to here as "landowner", and _____, referred to here as the "Permittee".

Landowner is the owner of agricultural land shown on the map attached as Exhibit A and designated there as _____ ("landowner's land"). Permittee agrees to apply and landowner agrees to comply with certain permit requirements following application of sewage sludge on landowner's land in amounts and in a manner authorized by VPDES permit number _____ which is held by the Permittee.

Landowner acknowledges that the appropriate application of sewage sludge will be beneficial in providing fertilizer and soil conditioning to the property. Moreover, landowner acknowledges having been expressly advised that, in order to protect public health, the following site restrictions must be adhered to when sewage sludge receives Class B treatment for pathogen reduction:

1. Food crops with harvested parts that touch the sewage sludge/soil mixture and are totally above the land surface shall not be harvested for 14 months after application of sewage sludge;

2. Food crops with harvested parts below the surface of the land shall not be harvested for 20 months after application of sewage sludge when the sewage sludge remains on the land surface for four months or longer prior to incorporation into the soil;

3. Food crops with harvested parts below the surface of the land shall not be harvested for 38 months after application of sewage sludge when the sewage sludge remains on the land surface for less than four months prior to incorporation into the soil;

4. Food crops, feed crops, and fiber crops shall not be harvested for 30 days after application of sewage sludge;

5. Animals shall not be grazed on the land for 30 days after application of sewage sludge;

6. Turf grown on land where sewage sludge is applied shall not be harvested for one year after application of the sewage sludge when the harvested turf is placed on either land with a high potential for public exposure or a lawn, unless otherwise specified by the State Water Control Board;

7. Public access to land with a high potential for public exposure shall be restricted for one year after application of sewage sludge;

8. Public access to land with a low potential for public exposure shall be restricted for 30 days after application of sewage sludge.

9. Tobacco, because it has been shown to accumulate cadmium, should not be grown on landowner's land for three years following the application of sewage sludge borne cadmium equal to or exceeding 0.5 kilograms/hectare (0.45 pounds/acre).

Permittee agrees to notify landowner or landowner's designee of the proposed schedule for sewage sludge application and specifically prior to any particular application to landowner's land. This agreement may be terminated by either party upon written notice to the address specified below.

Landowner:	Permittee:
_____	_____
Signature	Signature
_____	_____
Mailing Address	Mailing Address

SECTION D. SURFACE DISPOSAL

Complete this section only if you own or operate a surface disposal site. Provide the information for each active sewage sludge unit. N/A

1. Information on Active Sewage Sludge Units.
   a. Unit name or number: _____
   b. Unit location
      i. Street or Route#: _____
      County: _____
      City or Town: _____ State: _____ Zip: _____
      ii. Latitude: _____ Longitude: _____
      Method of latitude/longitude determination
      ____ USGS map ____ Filed survey ____ Other
   c. Topographic map. Provide a topographic map (or other appropriate map if a topographic map is unavailable) that shows the site location.
   d. Total dry metric tons of sewage sludge placed on the active sewage sludge unit per 365-day period: _____ dry metric tons.
   e. Total dry metric tons of sewage sludge placed on the active sewage sludge unit over the life of the unit: _____ dry metric tons.
   f. Does the active sewage sludge unit have a liner with a minimum hydraulic conductivity of 1×10^{-7} cm/sec? ___Yes ___No If yes, describe the liner or attach a description.
   _____
   _____
   g. Does the active sewage sludge unit have a leachate collection system? ___Yes ___No
   If yes, describe the leachate collection system or attach a description. Also, describe the method used for leachate disposal and provide the numbers of any federal, state or local permits for leachate disposal:
   _____
   _____
   _____
   h. If you answered no to either f or g, answer the following:
   Is the boundary of the active sewage sludge unit less than 150 meters from the property line of the surface disposal site? ___Yes ___No If yes, provide the actual distance in meters: _____
   i. Remaining capacity of active sewage sludge unit, in dry metric tons: _____ dry metric tons
   Anticipated closure date for active sewage sludge unit, if known: _____ (MM/DD/YYYY)
   Provide with this application a copy of any closure plan developed for this active sewage sludge unit.

2. Sewage Sludge from Other Facilities.
   Is sewage sludge sent to this active sewage sludge unit from any facilities other than yours? ___Yes ___No
   If yes, provide the following information for each such facility, attach additional sheets as necessary.
   a. Facility name: _____
   b. Facility contact: _____
   Title: _____
   Phone: ( ) _____
   c. Mailing address.
   Street or P.O. Box: _____
   City or Town: _____ State: _____ Zip: _____
   d. List, on this form or an attachment, the facility's VPDES permit number as well as the numbers of all other federal, state or local permits that regulate the facility's sewage sludge management practices:
   ~~Permit Number:~~ ~~Type of Permit:~~
   _____ _____
   _____ _____
   e. Which class of pathogen reduction is achieved before sewage sludge leaves the other facility?
   ___Class A ___Class B ___Neither or unknown
   f. Describe, on this form or on another sheet of paper, any treatment processes used at the other facility to reduce pathogens in sewage sludge: _____
   _____
   _____

g. Which vector attraction reduction option is achieved before sewage sludge leaves the other facility?
___ Option 1 (Minimum 38 percent reduction in volatile solids)
___ Option 2 (Anaerobic process, with bench-scale demonstration)
___ Option 3 (Aerobic process, with bench-scale demonstration)
___ Option 4 (Specific oxygen uptake rate for aerobically digested sludge)
___ Option 5 (Aerobic processes plus raised temperature)
___ Option 6 (Raise pH to 12 and retain at 11.5)
___ Option 7 (75 percent solids with no unstabilized solids)
___ Option 8 (90 percent solids with unstabilized solids)
___ None or unknown

h. Describe, on this form or another sheet of paper, any treatment processes used at the other facility to reduce vector attraction properties of sewage sludge:_____
_____
_____

i. Describe, on this form or another sheet of paper, any other sewage sludge treatment activities performed by the other facility that are not identified in e - h above:_____
_____
_____

3. Vector Attraction Reduction.

a. Which vector attraction reduction option, if any, is met when sewage sludge is placed on this active sewage sludge unit?
___ Option 9 (Injection below land surface)
___ Option 10 (Incorporation into soil within 6 hours)
___ Option 11 (Covering active sewage sludge unit daily)

b. Describe, on this form or another sheet of paper, any treatment processes used at the active sewage sludge unit to reduce vector attraction properties of sewage sludge: _____
_____
_____

4. Ground Water Monitoring.

a. Is ground water monitoring currently conducted at this active sewage sludge unit or are ground water monitoring data otherwise available for this active sewage sludge unit? ___Yes ___No
If yes, provide a copy of available ground water monitoring data. Also provide a written description of the well locations, the approximate depth to ground water, and the ground water monitoring procedures used to obtain these data.

b. Has a ground water monitoring program been prepared for this active sewage sludge unit?
___Yes ___No If yes, submit a copy of the ground water monitoring program with this application.

c. Have you obtained a certification from a qualified ground water scientist that the aquifer below the active sewage sludge unit has not been contaminated? ___Yes ___No
If yes, submit a copy of the certification with this application.

5. Site-Specific Limits.
Are you seeking site-specific pollutant limits for the sewage sludge placed on the active sewage sludge unit?
___Yes ___No If yes, submit information to support the request for site-specific pollutant limits with this application.

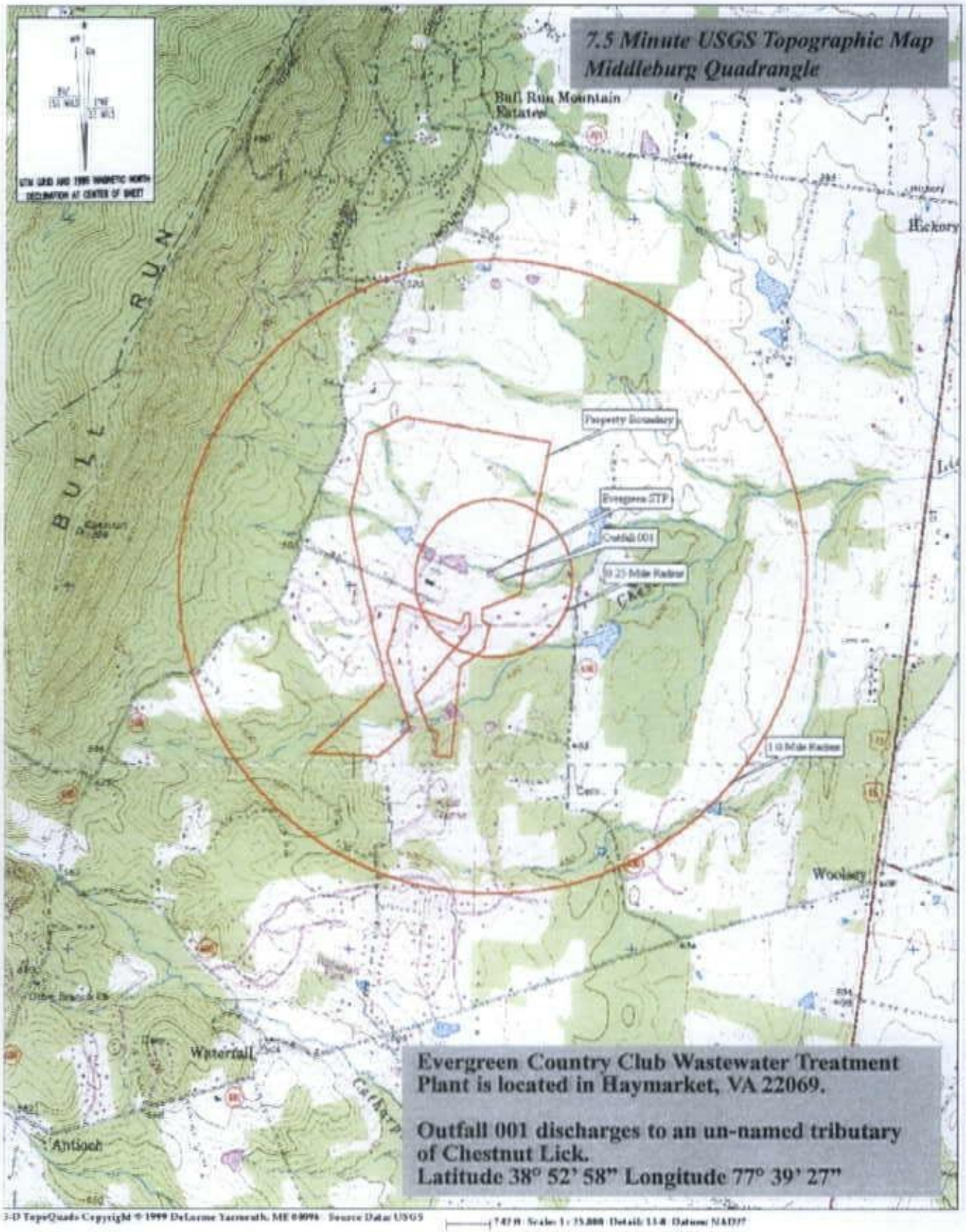

3-D TopoQuads Copyright © 1999 DeLorme Yarmouth, ME 04096 Source Data: USGS

Evergreen SBR Wastewater Treatment System

The facility consists of an SBR Activated Sludge System with Post Filtration, UV Disinfection and Post Aeration.

Attachment 2 B

UV System

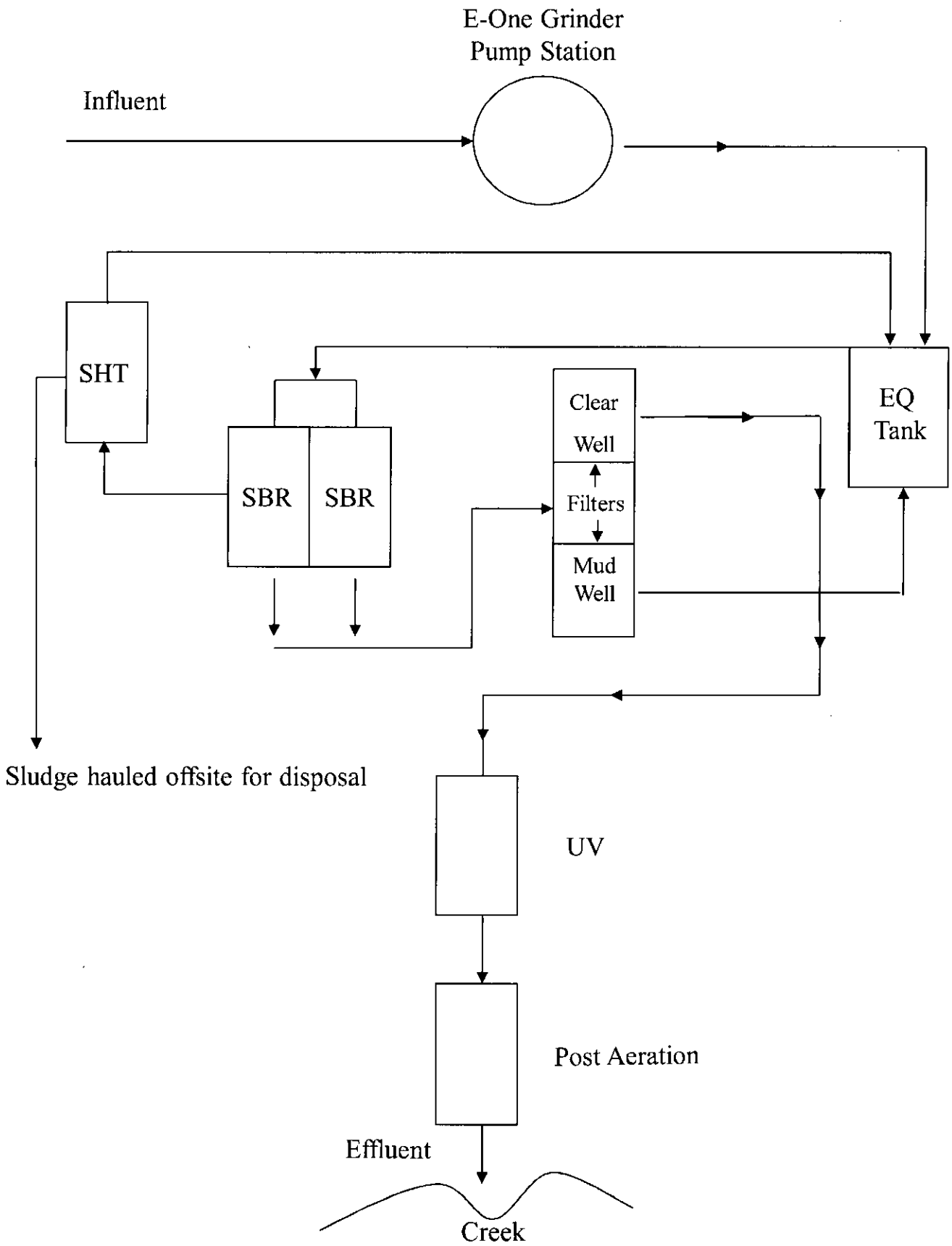

Attachment 3

ESS

Environmental Systems Service, Ltd.

November 26, 2012

Upper Occoquan Sewage Authority
Attn: Jack Sellman
Process Director
14631 Compton Road
Centerville, VA 20121

RE: Evergreen Country Club WWTP Sludge
VPDES Permit No. VA0087891

Dear Mr. Sellman:

To be in compliance with the VPDES Permit Regulation (9VAC 25-31-530 G) I am required to notify you that in treating and disposing of our sewage sludge you must comply with the VPDES Permit Regulation Part VI, Subpart B – Land Application, if your facility disposes of sewage sludge by this method.

Should you have any questions on this matter, please contact the Northern Virginia Regional Office (NVRO) of the Department of Environmental Quality (DEQ) in Woodbridge, VA.

Best Regards,

Cody Hoehna, Operations Manager
Environmental Services Division

cc: DEQ, NVRO

218 North Main Street • P.O. Box 520 • Culpeper, VA 22701 • Telephone 540-825-6660 • Fax 540-825-4961 • www.ess-services.com

Attachment 4

Sludge Hauling Route From Evergreen Country Club

Start

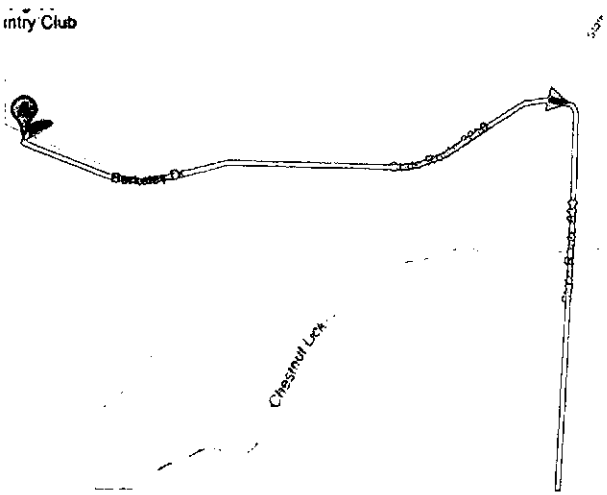

Route Overview

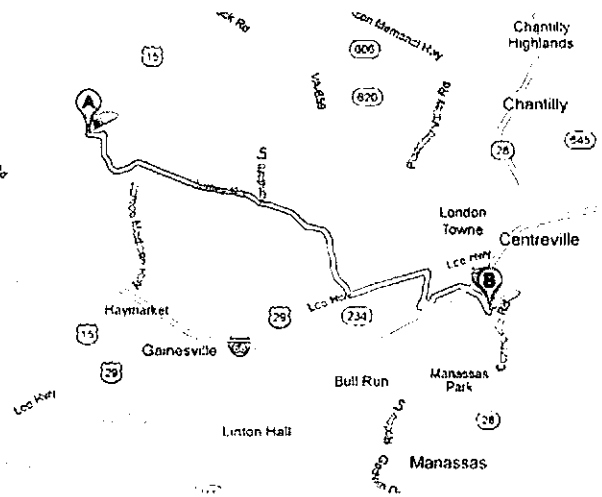

Finish

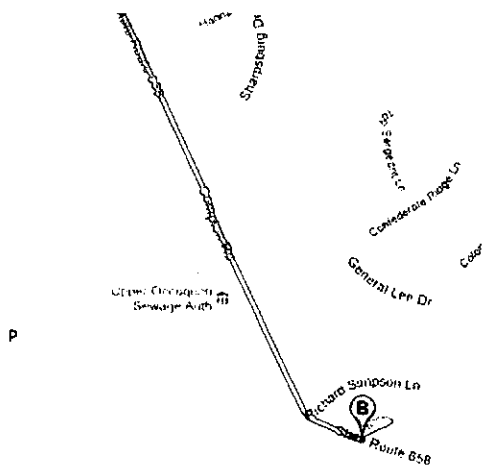

15900 Berkeley Drive
Haymarket,, VA 20169

14631 Compton Road
Centerville, VA 20121

Advantage Septic Service
8016 Hill Crest Drive
Manassas, VA 20111
Phone: 703-392-7070

Upper Occoquan Sewage Authority
Mr. Jack Sellman, Process Director
Phone: 703-830-2200
Receiving Facility VPDES #: VA0024988
Contact Hours 8:00-5:00 Monday -Friday

VA DEPARTMENT OF ENVIRONMENTAL QUALITY
NORTHERN
DEC 17 2012
REGIONAL OFFICE
WOODBRIDGE, VA

VPDES Permit Application Addendum

1. **Entity to whom the permit is to be issued:** **Evergreen Country Club**
   Who will be legally responsible for the wastewater treatment facilities and compliance with the permit? This may or may not be the facility or property owner.

2. **Is this facility located within city or town boundaries?** Y/N

3. **Provide the tax map parcel number for the land where the discharge is located. 7200-26-2563**

4. **For the facility to be covered by this permit, how many acres will be disturbed during the next five years due to new construction activities? 0-5 acres**

5. **What is the design average effluent flow of this facility?** 0.0075 MGD
   For industrial facilities, provide the max. 30-day average production level, include units: N/A

   In addition to the design flow or production level, should the permit be written with limits for any other discharge flow tiers or production levels? Y/N
   If "Yes", please identify the other tiers (in MGD) or production levels:_____
   Please consider the following questions for both the flow tiers and the production levels (if applicable): Do you plan to expand operations during the next five years? Is your facility's design flow considerably greater than your current flow?

6. **Nature of operations generating wastewater:**
   Country Club and Golf Course

   _100__% of flow from domestic connections/sources
   Number of private residences to be served by the treatment works: **0 residences, commercial private country club golf course.**

   ____ % of flow from non-domestic connections/sources

7. **Mode of discharge:** _X__ Continuous ___ Intermittent ___ Seasonal
   Describe frequency and duration of intermittent or seasonal discharges:
   _____

8. **Identify the characteristics of the receiving stream at the point just above the facility's discharge point:**
   __ Permanent stream, never dry
   _X_ Intermittent stream, usually flowing, sometimes dry
   __ Ephemeral stream, wet-weather flow, often dry
   __ Effluent-dependent stream, usually or always dry without effluent flow
   __ Lake or pond at or below the discharge point
   __ Other:_____

9. Approval Date(s):
   O&M Manual____2007_____ **Sludge/Solids Management Plan**____Unknown_____

   Have there been any changes in your operations or procedures since the above approval dates? Y/N

3/27/2012

PUBLIC NOTICE BILLING INFORMATION

I hereby authorize the Department of Environmental Quality to have the cost of publishing a public notice billed to the Agent/Department shown below. The public notice will be published once a week for two consecutive weeks in Fauquier Times in accordance with 9 VAC 25-31-290.C.2.

Agent/Department to be billed: Evergreen Country Club

Owner:

Agent/Department Address: P.O. Box 176

Haymarket, VA 22069

Agent's Telephone No.: 703-754-4125

Printed Name: Bryan Dolieslager

Authorizing Agent – Signature:

Date: 12/10/12

VPDES Permit No. VA0087891
Evergreen Country Club STP

Pleaser return to:

April Young
VA-DEQ, NRO
13901 Crown Court
Woodbridge, VA 22193
703-583-3841