This document gives pertinent information concerning the reissuance of the Virginia Pollutant Discharge Elimination System (VPDES) Permit listed below. This permit is being processed as a Major/ Municipal permit. The discharge results from the operation of a 2.0 MGD wastewater treatment plant (WWTP), with future expansion for 2.5 MGD. This permit action consists of updating the proposed effluent limits to reflect the current Virginia Water Quality Standards (effective January 6, 2011) and updating permit language as appropriate. The effluent limitations and special conditions contained in this permit will maintain the Water Quality Standards (WQS) of 9VAC25-260 et seq.

1.	Facility Name and Mailing Address:	Remington WWTP 12523 Lucky Hill Road Remington, VA 22734	SIC Code :	4952 (WWTP)
	Facility Location:	12523 Lucky Hill Road Remington, VA 22734	County:	Fauquier
	Facility Contact Name:	Mr. Raymond Searls	Telephone Number:	(540) 439-2225
	Facility E-mail Address:	Remingtonwwtp@verizon.net		
2.	Permit No.:	VA0076805	Expiration Date of previous permit:	March 13, 2013
	Other VPDES Permits associated with this facility:		VAN020053	
	Other Permits associated with this facility:		Hazardous Waste – EPA ID Number 988215372	
	E2/E3/E4 Status:	Not Applicable		
3.	Owner Name:	Fauquier County Water and Sanitation Authority		
	Owner Contact/Title:	Cheryl St. Amant / Associate General Manager Operations		
	Telephone Number:	(540) 349-2092		
	Owner E-mail Address:	camant@fcwsa.org		
4.	Application Complete Date:	September 27, 2012		
	Permit Drafted By:	Susan Mackert	Date Drafted:	January 22, 2013
	Draft Permit Reviewed By:	Alison Thompson	Date Reviewed:	February 4, 2013
	WPM Review By:	Bryant Thomas	Date Reviewed:	March 8, 2013
	Public Comment Period :	Start Date: June 27, 2013	End Date:	July 26, 2013

5. Receiving Waters Information: See Attachment 1 for the Flow Frequency Determination

Receiving Stream Name :	Rappahannock River	Stream Code:	3-RPP
Drainage Area at Outfall:	632 square miles*	River Mile:	146.6
Stream Basin:	Rappahannock River	Subbasin:	Rappahannock River
Section:	3	Stream Class:	III
Special Standards:	None	Waterbody ID:	VAN-E08R
7Q10 Low Flow: June – Nov.	6.4 MGD	7Q10 High Flow: Dec. - May	64 MGD
1Q10 Low Flow: June – Nov.	5.6 MGD	1Q10 High Flow: Dec. - May	52 MGD
30Q10 Low Flow: June – Nov.	12 MGD	30Q10 High Flow: Dec. - May	89 MGD
Harmonic Mean Flow:	101 MGD	30Q5 Flow:	21 MGD

*Using GIS, DEQ staff has determined the drainage area to be 620 square miles which is reflected within the planning statement (see Attachment 5). During the previous reissuance of the permit, a drainage area of 632 square miles was utilized. DEQ staff has compared the flow frequency determinations for both the 620 and 632 square mile drainage areas and finds no significant difference. It is staff's best professional judgement that a drainage area of 632 square miles be used as it provides consistency with the previous permit.

6. Statutory or Regulatory Basis for Special Conditions and Effluent Limitations:

✓	State Water Control Law		EPA Guidelines
✓	Clean Water Act	✓	Water Quality Standards
✓	VPDES Permit Regulation	✓	Other: 9VAC25-820 (Nutrient General Permit)
✓	EPA NPDES Regulation		

7. Licensed Operator Requirements: Class II

8. Reliability Class: Class I

9. Permit Characterization:

	Private	✓	Effluent Limited		Possible Interstate Effect
	Federal	✓	Water Quality Limited		Compliance Schedule Required
	State	✓	Whole Effluent Toxicity Program Required		Interim Limits in Permit
✓	POTW*		Pretreatment Program Required		Interim Limits in Other Document
	TMDL				

*POTW = Publicly Owned Treatment Works

10. Wastewater Sources and Treatment Description:

The Remington WWTP is a municipal wastewater treatment plant operating at a current design capacity of 2.0 MGD, with an additional permitted flow tier of 2.5 MGD. The facility treats domestic wastewater from the Town of Remington, the Bealeton area, and the Opal area with approximately 2,223 connections served. The plant is currently treating wastewater at the 2.0 MGD flow tier.

Influent flow enters the WWTP via a 16" force main. The plant has two bar screens installed in parallel channels, one automated and one manual, with influent flow directed to the automated bar screen. The manual bar screen is utilized primarily when the automated system is out of service. Flow from the bar screen then enters the grit/grease removal system. Screenings from the bar screen, settled grit, and grease are collected and disposed of at a local landfill.

The screened and degritted wastewater then flows through a splitter box to the activated sludge process using one of two Schreiber Units. Five aeration blowers are available with one or two blowers being used per unit to provide air to maintain dissolved oxygen (D.O.) levels. The mixed liquor effluent then flows to two secondary clarifiers via a second splitter box, with one clarifier typically in use. A scum collection system pumps scum removed from the surface of the clarifiers to the headworks for removal.

Biological Nutrient Removal (BNR) is accomplished through the use of denitrification filters. Five feed pumps feed the final clarifier effluent to the top of the filter influent channel which then subsequently feeds four denitrification filters. Methanol may be added to the final clarifier effluent as a supplementary carbon source for denitrification, as well as ferric chloride for phosphorus removal enhancement. The filter effluent then flows to the post aeration tanks for re-aeration prior to disinfection.

Ultraviolet (UV) irradiation is used for disinfection. Three banks of UV lamps are utilized. Final effluent flow is continuously measured at the effluent parshall flume via an ultrasonic flow meter. The final effluent can be aerated in the effluent channel via dedicated post aeration blowers. Final effluent is discharged via a submerged outfall (Outfall 001) to the Rappahannock River.

Additionally, all facility drains transport drainage to the plant drain pump station. This includes all process unit operation systems. All storm water drainage ditches located around the plant, especially those adjacent to the solids holding tank and sludge handling building are contained via an 8-inch pipe and diverted to the gravity sludge thickeners. All potential drainage, to include storm water runoff, is contained and diverted to the headworks via the plant drain pump station.

See Attachment 2 for a facility schematic/diagram.

TABLE 1 – Outfall Description

Outfall Number	Discharge Sources	Treatment	Design Flow(s)	Outfall Latitude and Longitude
001	Domestic Wastewater	See Item 10 above.	2.0 MGD (with tier for 2.5 MGD)	38° 31′ 33″ N 77° 48′ 42″ W
See Attachment 3 for (Remington, DEQ #196D) topographic map.				

11. Sludge Treatment and Disposal Methods:

Waste activated sludge (WAS) is pumped from the final clarifiers to the aerobic digester. Thickened sludge is then pumped to the sludge holding tank prior to being pumped to a centrifuge for dewatering. Sludge from the septage holding tank is also pumped to the centrifuge for dewatering. In the event the centrifuge is out of service, the facility's sludge drying beds may also be utilized. Dewatered sludge is then land applied.

Recyc Systems, Incorporated, serves as the biosolids land application contractor for the Fauquier County Water and Sanitation Authority. Since the previous reissuance of this permit, DEQ has assumed regulatory oversight for all land application of Class B biosolids. As such, all land application activities are now conducted in accordance with 9VAC25-32 (Virginia Pollution Abatement Permit Regulations).

12. Monitoring Stations in Vicinity of Discharge in Waterbody VAN-E08R:
The monitoring station listed below is located within a five mile radius of the discharge location. Please see Attachment 4 for a list of all other discharges located within the waterbody VAN-E08R.

TABLE 2

3-RPP142.36	DEQ water quality monitoring station located at the Route 620 bridge crossing approximately 4.2 miles downstream of Outfall 001.
There are no public water supply intakes located within a five mile radius of the discharge location.	

13. Material Storage:

TABLE 3 - Material Storage		
Materials Description	Volume Stored	Spill/Stormwater Prevention Measures
220 weight oil	55 gallons	Located within workshop
Xtc 8508 Polymer	1 Tote (275 gallons)	Located within solids building

14. Site Inspection:

A compliance inspection was performed by the facility's water compliance inspector, April Young, on May 18, 2012. The information provided in the facility's permit reapplication package dated September 4, 2012, and received on September 10, 2012, is consistent with the observations made during the compliance inspection. The reapplication package is considered accurate and representative of actual site conditions.

15. Receiving Stream Water Quality and Water Quality Standards:

a) Ambient Water Quality Data

The portion of the Rappahannock River that Outfall 001 discharges into is not monitored and assessed. DEQ water quality monitoring station, 3-RPP142.36, is located at the Route 620 bridge crossing, approximately 4.2 miles downstream of Outfall 001. The following is the monitoring summary for this segment of the Rappahannock River, as taken from the Draft 2012 Integrated Report*:

Class III, Section 3.

DEQ monitoring station 3-RPP142.36, at Route 620.

E. coli monitoring finds a bacterial impairment, resulting in an impaired classification for the recreation use. The aquatic life, fish consumption, and wildlife uses are considered fully supporting.

*The Draft 2012 Integrated Report (IR) has been through the public comment period and reviewed by EPA. The 2012 IR is currently being finalized and prepared for release.

b) 303(d) Listed Stream Segments and Total Maximum Daily Loads (TMDLs)

TABLE 4 – 303(d) Impairment and TMDL Information							
*Impairment Information in the Draft 2012 Integrated Report**							
Waterbody Name	**Impaired Use**	**Cause**	**Distance From Outfall**	**TMDL completed**	**WLA****	**Basis for WLA**	**TMDL Schedule**
Rappahannock River	Recreation	*E. coli*	1.6 miles	Rappahannock River Basin Bacteria 01/23/2008	4.35E+12 cfu/year *E. coli*	126 cfu/100ml --- 2.5 MGD	---

*Virginia's Draft 2012 Integrated Report (IR) has been through the public comment period and reviewed by EPA. The 2012 IR is currently being finalized and prepared for release.

**WLA = Wasteload Allocation

Significant portions of the Chesapeake Bay and its tributaries are listed as impaired on Virginia's 303(d) list of impaired waters for not meeting the aquatic life use support goal, and the 2010 Virginia Water Quality Assessment 305(b)/303(d) Integrated Report indicates that much of the mainstem Bay does not fully support this use support goal under Virginia's Water Quality Assessment guidelines. Nutrient enrichment is cited as one of the primary causes of impairment. EPA issued the Bay TMDL on December 29, 2010. It was based, in part, on the Watershed Implementation Plans developed by the Bay watershed states and the District of Columbia.

The Chesapeake Bay TMDL addresses all segments of the Bay and its tidal tributaries that are on the impaired waters list. As with all TMDLs, a maximum aggregate watershed pollutant loading necessary to achieve the Chesapeake Bay's water quality standards has been identified. This aggregate watershed loading is divided among the Bay states and their major tributary basins, as well as by major source categories [wastewater, urban storm water, onsite/septic agriculture, air deposition]. Fact Sheet Section 17.e provides additional information on specific nutrient limitations for this facility to implement the provisions of the Chesapeake Bay TMDL.

The full planning statement is found in Attachment 5.

c) Receiving Stream Water Quality Criteria

Part IX of 9VAC25-260(360-550) designates classes and special standards applicable to defined Virginia river basins and sections. The receiving stream, the Rappahannock River, is located within Section 3 of the Rappahannock River Basin, and classified as a Class III water.

At all times, Class III waters must achieve a dissolved oxygen (D.O.) of 4.0 mg/L or greater, a daily average D.O. of 5.0 mg/L or greater, a temperature that does not exceed 32°C, and maintain a pH of 6.0-9.0 standard units (S.U.).

Attachment 6 details other water quality criteria applicable to the receiving stream.

Ammonia as N:
The fresh water, aquatic life Water Quality Criteria for Ammonia are dependent on the instream and/or effluent temperature and pH. The 90th percentile temperature and pH values are used because they best represent the critical design conditions of the receiving stream.

During the previous reissuance of this permit, receiving stream ambient monitoring data for pH and temperature which was collected from the facility's mixing zone (1997 – 2001) was re-evaluated against receiving stream ambient monitoring data for pH and temperature from 2004 – 2006. Staff found no significant differences in the data used to establish ammonia criteria and subsequent effluent limits in the previous permit. Therefore, the previously established pH and temperature values were used to calculate ammonia criteria.

With this reissuance staff utilized data from DEQ ambient monitoring station 3-RPP147.10 on the Rappahannock River located approximately 0.5 rivermiles upstream of the discharge. The use of data from this monitoring station is more appropriate given it is not influenced by the facility's mixing zone and is considered more representative of the receiving stream. As such, staff has reviewed pH and temperature data from this monitoring station for the time period of January 2008 – February 2011 (Attachment 6). Because ample data exists for the receiving stream it is staff's best professional judgement that the 90th percentile temperature and pH values be used as they best represent the critical design conditions of the receiving stream. Table 5 and Table 6 below show the 90th percentile comparisons. As result, staff used the new data to determine new ammonia water quality criteria and new wasteload allocations (WLAs).

Table 5 – 90th Percentile pH Comparison (Ambient Data)	
2007	2013
7.7 S.U.	7.2 S.U.

Table 6 – 90th Percentile Temperature Comparison (Ambient Data)		
Season	2007	2013
June - November	23.1 °C	26.2 °C
December - May	19.8 °C	13.9 °C

When instream temperature and pH data are utilized, staff must also use effluent pH and temperature data to establish the ammonia water quality standard to account for mixing in receiving waters. The 90th percentile pH was derived from Outfall 001 DMR submissions dated December 2010 to September 2012 and was determined to be 8.3 S.U. (see Attachment 6). Because the facility is not required to monitor effluent temperature at the outfall, a default value of 25°C was used. The ammonia water quality standards calculations are shown in Attachment 6.

Metals Criteria:
The Water Quality Criteria for some metals are dependent on the receiving stream and/or effluent hardness (expressed as mg/L calcium carbonate). During the previous reissuance of this permit, receiving stream ambient monitoring data for hardness collected from the facility's mixing zone (1997 – 2001) was used.

With this reissuance staff utilized data from DEQ ambient monitoring station 3-RPP147.10 on the Rappahannock River. The use of data from this monitoring station is more appropriate given it is not influenced by the facility's mixing zone and is considered more representative of the receiving stream. As such, staff reviewed available hardness data from this monitoring station from 2003 and the average hardness of the receiving stream was determined to be 25.5 mg/L (see Attachment 6). Effluent data for hardness was provided within the application package. The hardness-dependent metals criteria in Attachment 6 are based on a single effluent value of 372 mg/L.

Bacteria Criteria:
The Virginia Water Quality Standards at 9VAC25-260-170A state that the following criteria shall apply to protect primary recreational uses in surface waters:

1) *E. coli* per 100 ml of water shall not exceed a monthly geometric mean of the following:

	Geometric Mean[1]
Freshwater *E. coli* (N/100 ml)	126

[1]For a minimum of four weekly samples [taken during any calendar month].

d) Receiving Stream Special Standards

The State Water Control Board's Water Quality Standards, River Basin Section Tables (9VAC25-260-360, 370 and 380) designates the river basins, sections, classes, and special standards for surface waters of the Commonwealth of Virginia. The receiving stream, the Rappahannock River, is located within Section 3 of the Rappahannock River Basin. This section has not been designated with any special standards.

e) Threatened or Endangered Species

The Virginia DGIF Fish and Wildlife Information System Database was searched on November 21, 2012, for records to determine if there are threatened or endangered species in the vicinity of the discharge. The following threatened or endangered species were identified within a 2 mile radius of the discharge: Dwarf Wedgemussel, Upland Sandpiper, Loggerhead Shrike, Henslow's Sparrow, Bald Eagle, Green Floater, and the Migrant Loggerhead Shrike. The limits proposed in this draft permit are protective of the Virginia Water Quality Standards and protect the threatened and endangered species found near the discharge.

The stream that the facility discharges to is within a reach identified as having an Anadromous Fish Use. It is staff's best professional judgment that the proposed limits are protective of this use.

16. Antidegradation (9VAC25-260-30):

All state surface waters are provided one of three levels of antidegradation protection. For Tier 1 or existing use protection, existing uses of the water body and the water quality to protect these uses must be maintained. Tier 2 water bodies have water quality that is better than the water quality standards. Significant lowering of the water quality of Tier 2 waters is not allowed without an evaluation of the economic and social impacts. Tier 3 water bodies are exceptional waters and are so designated by regulatory amendment. The antidegradation policy prohibits new or expanded discharges into exceptional waters.

The receiving stream has been classified as Tier 2 based on an evaluation of ambient data from DEQ water quality monitoring station 3-RPP142.36, located at the Route 620 bridge crossing, and a review of the draft 2012 305(b)/303 (d) Integrated Report. Additionally, this section of the Rappahannock River has historically been classified as Tier 2. No significant degradation to the existing water quality will be allowed. In accordance with current DEQ guidance, no significant lowering of water quality is to occur where permit limits are based on the following:

- The dissolved oxygen in the receiving stream is not lowered more than 0.2 mg/L from the existing levels;
- The pH of the receiving stream is maintained within the range 6.0-9.0 S.U.;
- There is compliance with all temperature criteria applicable to the receiving stream;
- No more than 25% of the unused assimilative capacity is allocated for toxic criteria established for the protection of aquatic life; and
- No more than 10% of the unused assimilative capacity is allocated for criteria for the protection of human health.

The antidegradation policy also prohibits the expansion of mixing zones to Tier 2 waters unless the requirements of 9VAC25-260-30.A.2 are met. The draft permit is not proposing an expansion of the existing mixing zone.

17. Effluent Screening, Wasteload Allocation, and Effluent Limitation Development:

To determine water quality-based effluent limitations for a discharge, the suitability of data must first be determined. Data is suitable for analysis if one or more representative data points is equal to or above the quantification level ("QL") and the data represent the exact pollutant being evaluated.

Next, the appropriate Water Quality Standards are determined for the pollutants in the effluent. Then, the Wasteload Allocations (WLA) are calculated. The WLA values are then compared with available effluent data to determine the need for effluent limitations. Effluent limitations are needed if the 97th percentile of the daily effluent concentration values is greater than the acute wasteload allocation or if the 97th percentile of the four-day average effluent concentration values is greater than the chronic wasteload allocation. Effluent limitations are the calculated on the most limiting WLA, the required sampling frequency, and statistical characteristics of the effluent data.

a) Effluent Screening:
Effluent data obtained from the permit application and Discharge Monitoring Report (DMR) forms from December 2010 through September 2012 has been reviewed and determined to be suitable for evaluation. The following pollutants require a wasteload allocation analysis: zinc and copper.

b) Mixing Zones and Wasteload Allocations (WLAs):
Wasteload allocations (WLAs) are calculated for those parameters in the effluent with the reasonable potential to cause an exceedance of water quality criteria. The basic calculation for establishing a WLA is the steady state complete mix equation:

$$WLA = \frac{C_o[Q_e + (f)(Q_s)] - [(C_s)(f)(Q_s)]}{Q_e}$$

Where:
- WLA = Wasteload allocation
- C_o = In-stream water quality criteria
- Q_e = Design flow
- f = Decimal fraction of critical flow from mixing evaluation
- Q_s = Critical receiving stream flow (1Q10 for acute aquatic life criteria; 7Q10 for chronic aquatic life criteria; 30Q10 for ammonia criteria; harmonic mean for carcinogen-human health criteria; and 30Q5 for non-carcinogen human health criteria)
- C_s = Mean background concentration of parameter in the receiving stream.

The Water Quality Standards contain two distinct mixing zone requirements. The first requirement is general in nature and requires the "use of mixing zone concepts in evaluating permit limits for acute and chronic standards in 9VAC25-260-140.B". The second requirement is specific and establishes special restrictions for regulatory mixing zones "established by the Board".

The Department of Environmental Quality uses a simplified mixing model to estimate the amount of mixing of a discharge with the receiving stream within specified acute and chronic exposure periods. The simplified model contains the following assumptions and approximations:

- The effluent enters the stream from the bank, either via a pipe, channel or ditch.
- The effluent velocity isn't significantly greater (no more than 1 - 2 ft/sec greater) than the stream velocity.
- The receiving stream is much wider than its depth (width at least ten times the depth).
- Diffusive mixing in the longitudinal direction (lengthwise) is insignificant compared with advective transport (flow).
- Complete vertical mixing occurs instantaneously at the discharge point. This is assumed since the stream depth is much smaller than the stream width.
- Lateral mixing (across the width) is a linear function of distance downstream.
- The effluent is neutrally buoyant (e.g. the effluent discharge temperature and salinity are not significantly different from the stream's ambient temperature and salinity).
- Complete mix is determined as the point downstream where the variation in concentration is 20% or less across the width and depth of the stream.
- The velocity of passing and drifting organisms is assumed equal to the stream velocity.

If it is suitably demonstrated that a reasonable potential for lethality or chronic impacts within the physical mixing area doesn't exist, then the basic complete mix equation, with 100% of the applicable stream flow, is appropriate. If the mixing analysis determines there is a potential for lethality or chronic impacts within the physical mixing area, then the proportion of stream flow that has mixed with the effluent over the allowed exposure time is used in the basic complete mix equation. As such, the wasteload allocation equation is modified to account for the decimal fraction of critical flow (f).

Staff derived wasteload allocations where parameters are reasonably expected to be present in an effluent (e.g., total residual chlorine where chlorine is used as a means of disinfection) and where effluent data indicate the pollutant is present in the discharge above quantifiable levels. Attachment 6 details the mixing analysis results and WLA derivations.

Antidegradation Wasteload Allocations (AWLAs).

Since the receiving stream has been determined to be a Tier II water, staff must also determine antidegradation wasteload allocations (AWLAs). The steady state complete mix equation is used substituting the antidegradation baseline (C_b) for the in-stream water quality criteria (C_o):

$$AWLA = \frac{C_b(Q_e + Q_s) - (C_s)(Q_s)}{Q_e}$$

Where:
- AWLA = Antidegradation-based wasteload allocation
- C_b = In-stream antidegradation baseline concentration
- Q_e = Design flow
- Q_s = Critical receiving stream flow (1Q10 for acute aquatic life criteria; 7Q10 for chronic aquatic life criteria; 30Q10 for ammonia criteria; harmonic mean for carcinogen-human health criteria; and 30Q5 for non-carcinogen human health criteria)
- C_s = Mean background concentration of parameter in the receiving stream.

Calculated AWLAs for the pollutants noted in b. above are presented in Attachment 6.

c) Effluent Limitations Toxic Pollutants, Outfall 001 –

9VAC25-31-220.D. requires limits be imposed where a discharge has a reasonable potential to cause or contribute to an in-stream excursion of water quality criteria. Those parameters with (A)WLAs that are near effluent concentrations are evaluated for limits.

The VPDES Permit Regulation at 9VAC25-31-230.D requires that monthly and weekly average limitations be imposed for continuous discharges from POTWs and monthly average and daily maximum limitations be imposed for all other continuous non-POTW discharges.

1) TKN:

2.0 MGD Flow Tier

a) April - October
The monthly average limit of 3.0 mg/L and the weekly average limit of 4.5 mg/L shall be carried forward with this reissuance. The monthly average limit is based on the regional stream model which was conducted in 1990 (Attachment 7) and 1996 (Attachment 8). The weekly average limit is based on a multiplier of 1.5 times the monthly average. The monitoring frequency of five days per week (5D/W) shall be carried forward.

b) November
With the previous reissuance a monthly average TKN limit of 5.6 mg/L was established for the month of November in lieu of the facility's ammonia limit. It remains staff's best professional judgment that the monthly average TKN limit is appropriate for the facility and is protective of ammonia toxicity. The weekly average limit is based on a multiplier of 1.5 times the monthly average. With this reissuance staff has corrected a technical error associated with the calculation of the weekly average limit in the previous limit. As such, the proposed weekly average TKN limit of 8.4 mg/L is more stringent than that found in the previous permit (11 mg/L). The monitoring frequency of five days per week (5D/W) shall be carried forward.

c) December – March
No TKN limits are necessary for the high flow months.

2.5 MGD Flow Tier

a) April - October
The monthly average limit of 3.0 mg/L and the weekly average limit of 4.5 mg/L shall be carried forward with this reissuance. The monthly average limit is based on the regional stream model which was conducted in 1990 (Attachment 7) and 1996 (Attachment 8). The weekly average limit is based on a multiplier of 1.5 times the monthly average. The monitoring frequency of five days per week (5D/W) shall be carried forward.

b) November
With the previous reissuance a monthly average TKN limit of 4.0 mg/L was established for the month of November in lieu of the facility's ammonia limit. It remains staff's best professional judgment that the monthly average TKN limit is appropriate for the facility and is protective of ammonia toxicity. The weekly average limit is based on a multiplier of 1.5 times the monthly average. As such, the weekly average limit shall be 6.0 mg/L. The monitoring frequency of five days per week (5D/W) shall be carried forward.

Staff has corrected a technical error associated with the calculation of the limit in the previous limit. As such, the above weekly average TKN limit is less stringent than that found in the previous permit (4.0 mg/L). VPDES permit regulations, 9VAC25-31-220.L.2.b.2, allows for relaxation of permit limits during permit reissuance if technical mistakes were made during the previous reissuance. Additionally, this limit has not been effective as the facility is not operational at the 2.5 MGD flow tier.

c) December - March
With the previous reissuance a monthly average TKN limit of 11 mg/L was established for the months of December - March in lieu of the facility's ammonia limit. It remains staff's best professional judgment that the monthly average TKN limit is appropriate for the facility and is protective of ammonia toxicity. The weekly average limit is based on a multiplier of 1.5 times the monthly average. As such, the weekly average limit shall be 16 mg/L. The monitoring frequency of five days per week (5D/W) shall be carried forward.

Staff has corrected a technical error associated with the calculation of the limit in the previous limit. As such, the above weekly average TKN limit is less stringent than that found in the previous permit (14 mg/L). VPDES permit regulations, 9VAC25-31-220.L.2.b.2, allows for relaxation of permit limits during permit reissuance if technical mistakes were made during the previous reissuance. Additionally, this limit has not been effective as the facility is not operational at the 2.5 MGD flow tier.

2) Zinc

2.0 MGD Flow Tier
An analysis of the data provided with this reissuance indicates the need for a monthly average and weekly average zinc limitation of 130 µg/L (Attachment 9). As such, monthly average and weekly average zinc limitations shall be implemented with this reissuance. The limitations shall be in the form of total recoverable zinc. A monitoring frequency of once every six months (1/6M) is proposed.

2.5 MGD Flow Tier
An analysis of the data provided with this reissuance indicates the continued need for a monthly average and weekly average zinc limitation. As such, monthly average and weekly average limitations of 120 µg/L are proposed with this reissuance (Attachment 9). The limitations shall be in the form of total recoverable zinc. The monitoring frequency of once every six months (1/6M) shall be carried forward.

3) Copper

2.0 MGD Flow Tier
An analysis of the data provided with this reissuance indicates the need for a monthly average and weekly avearge copper limitation of 15 µg/L (Attachment 10). The limits are derived based on one datum point (80 µg/L). Because the limits are derived from one datum point, it is staff's best professional judgement that monitoring be implemented in lieu of a limitation. Monitoring will allow for additional data to be collected to assist in a later determination of whether a copper limit is warranted. As such, dissolved copper monitoring shall be implemented with this reissuance. A monitoring frequency of once every six months (1/6M) is proposed.

2.5 MGD Flow Tier
An analysis of the data provided with this reissuance indicates the need for a monthly average and weekly average copper limitation of 14 µg/L (Attachment 10). The limits are derived based on one datum point (80 µg/L). Because the limits are derived from one datum point, it is staff's best professional judgement that monitoring be implemented in lieu of a limitation. Monitoring will allow for additional data to be collected to assist in a later determination of whether a copper limit is warranted. As such, dissolved copper monitoring shall be implemented with this reissuance. A monitoring frequency of once every six months (1/6M) is proposed.

4) Total Hardness:
The Water Quality Criteria for some metals are dependent on the effluent hardness (expressed as mg/L calcium carbonate). Because of the establishment of total recoverable zinc limitations and the proposed monitoring for dissolved copper, it is staff's best professional judgement that effluent hardness monitoring also be implemented with this reissuance. A monitoring frequency of once every six months (1/6M) is proposed.

d) Effluent Limitations and Monitoring, Outfall 001 – Conventional and Non-Conventional Pollutants

No changes to dissolved oxygen (D.O.), carbonaceous biochemical oxygen demand-5 day ($CBOD_5$), total suspended solids (TSS), and pH limitations are proposed.

Dissolved Oxygen, $CBOD_5$, and TKN limitations are based on the regional stream model which was conducted in 1990 (Attachment 7) and 1996 (Attachment 8).

It is staff's practice to equate the Total Suspended Solids limits with the $CBOD_5$ limits. TSS limits are established to equal $CBOD_5$ limits since the two pollutants are closely related in terms of treatment of domestic sewage.

pH limitations are set at the water quality criteria.

E. coli limitations are in accordance with the Water Quality Standards 9VAC25-260-170.

e) Effluent Annual Average Limitations and Monitoring, Outfall 001 – Nutrients

VPDES Regulation 9VAC25-31-220(D) requires effluent limitations that are protective of both the numerical and narrative water quality standards for state waters, including the Chesapeake Bay.

As discussed in Section 15, significant portions of the Chesapeake Bay and its tributaries are listed as impaired with nutrient enrichment cited as one of the primary causes. Virginia has committed to protecting and restoring the Bay and its tributaries. Only concentration limits are now found in the individual VPDES permit when the facility installs nutrient removal technology. The basis for the concentration limits is 9VAC25-40 - *Regulation for Nutrient Enriched Waters and Dischargers within the Chesapeake Bay Watershed* which requires new or expanding discharges with design flows of ≥0.04 MGD to treat for Total Nitrogen (TN) and Total Phosphorus (TP) to either Biological Nutrient Removal (BNR) levels (TN = 8 mg/L; TP = 1.0 mg/L) or State Of Art (SOA) levels (TN = 3.0 mg/L and TP = 0.3 mg/L).

This facility has also obtained coverage under 9VAC25-820 *General Virginia Pollutant Discharge Elimination System (VPDES) Watershed Permit Regulation for Total Nitrogen and Total Phosphorus Discharges and Nutrient Trading in the Chesapeake Bay Watershed in Virginia.* This regulation specifies and controls the nitrogen and phosphorus loadings from facilities and specifies facilities that must register under the general permit. Nutrient loadings for those facilities registered under the general permit as well as compliance schedules and other permit requirements, shall be authorized, monitored, limited, and otherwise regulated under the general permit and not this individual permit. This facility has coverage under this General Permit; the permit number is VAN0200053. Total Nitrogen Annual Loads and Total Phosphorus Annual Loads from this facility are found in 9VAC25-720 – *Water Quality Management Plan Regulation* which sets forth TN and TP maximum wasteload allocations for facilities designated as significant discharges, i.e., those with design flows of ≥0.5 MGD above the fall line and ≥0.1 MGD below the fall line.

Monitoring for Nitrates + Nitrites, Total Kjeldahl Nitrogen, Total Nitrogen, and Total Phosphorus are included in this permit. The monitoring is needed to protect the Water Quality Standards of the Chesapeake Bay. Monitoring frequencies are set at the frequencies set forth in 9VAC25-820. Annual average effluent limitations, as well as monthly and year to date calculations, for Total Nitrogen and Total Phosphorus are included in this individual permit. The annual averages are based on the technology installed as part of the Water Quality Improvement Fund (WQIF) grant funding.

f) Effluent Limitations and Monitoring Summary

The effluent limitations are presented in the following table. Limits were established for Flow, $CBOD_5$, Total Suspended Solids, TKN, pH, Dissolved Oxygen, and *E. coli*.

The limit for Total Suspended Solids is based on Best Professional Judgement.

The mass loading (kg/d) for monthly and weekly averages were calculated by multiplying the concentration values (mg/L), with the flow values (in MGD) and a conversion factor of 3.785.

The mass loading (lb/d) for TKN/Total Phosphorus monthly and weekly averages were calculated by multiplying the concentration values (mg/L), with the flow values (in MGD) and a conversion factor of 8.345.

Sample Type and Frequency are in accordance with the recommendations in the VPDES Permit Manual.

The VPDES Permit Regulation at 9VAC25-31-30 and 40 CFR Part 133 require that the facility achieve at least 85% removal for BOD and TSS (or 65% for equivalent to secondary). The limits in this permit are water-quality-based effluent limits and result in greater than 85% removal.

18. Antibacksliding:

1) TKN (2.5 MGD)

November
The backsliding proposed with this reissuance conforms to the anti-backsliding provisions of Section 402 (o) of the Clean Water Act, 9VAC25-31-220.L, and 40 CFR Part 122.44. As previously noted, VPDES permit regulations allow for the relaxation of permit limitations during a permit reissuance if technical mistakes were made during the previous reissuance. Calculation errors were discovered upon review of the previous reissuance file (see Section 17.c.1 of the Fact Sheet). Additionally, the limitation was not effective as the facility has not yet been operational at the 2.5 MGD flow tier.

December - March
The backsliding proposed with this reissuance conforms to the anti-backsliding provisions of Section 402 (o) of the Clean Water Act, 9VAC25-31-220.L, and 40 CFR Part 122.44. As previously noted, VPDES permit regulations allow for the relaxation of permit limitations during a permit reissuance if technical mistakes were made during the previous reissuance. Calculation errors were discovered upon review of the previous reissuance file (see Section 17.c.1 of the Fact Sheet). Additionally, the limitation was not effective as the facility has not yet been operational at the 2.5 MGD flow tier.

19a. Effluent Limitations/Monitoring Requirements: Outfall 001

Design flow is 2.0 MGD.

Effective Dates: During the period beginning with the permit's effective date and lasting until the issuance of the Certificate to Operate (CTO) for the 2.5 MGD facility or until the expiration date, whichever comes first.

PARAMETER	BASIS FOR LIMITS	DISCHARGE LIMITATIONS				MONITORING REQUIREMENTS	
		Monthly Average	Weekly Average	Minimum	Maximum	Frequency	Sample Type
Flow (MGD)	NA	NL	NA	NA	NL	Continuous	TIRE
pH	2	NA	NA	6.0 S.U.	9.0 S.U.	1/D	Grab
$CBOD_5$	2,3	20 mg/L 150 kg/day	30 mg/L 230 kg/day	NA	NA	5D/W	24H-C
Total Suspended Solids (TSS)	1	20 mg/L 150 kg/day	30 mg/L 230 kg/day	NA	NA	5D/W	24H-C
Dissolved Oxygen (DO)	2	NA	NA	6.5 mg/L	NA	1/D	Grab
Total Kjeldahl Nitrogen (TKN) (April – October)	2,3	3.0 mg/L 50 lb/day	4.5 mg/L 75 lb/day	NA	NA	5D/W	24H-C
Total Kjeldahl Nitrogen (TKN) (November)	2,3	5.6 mg/L 93 lb/day	8.4 mg/L 140 lb/day	NA	NA	5D/W	24H-C
E. coli (Geometric Mean)	2	126 n/100mls	NA	NA	NA	5D/W	Grab
Nitrate+Nitrite, as N	2,4	NL (mg/L)	NA	NA	NA	1/W	24H-C
Total Nitrogen [a]	2,4	NL (mg/L)	NA	NA	NA	1/W	Calculated
Total Nitrogen – Year to Date [b]	2,4	NL (mg/L)	NA	NA	NA	1/M	Calculated
Total Nitrogen - Calendar Year [b]	2,4	4.0 mg/L	NA	NA	NA	1/YR	Calculated
Total Phosphorus	2	NL (mg/L)	NA	NA	NA	1/W	24H-C
Total Phosphorus – Year to Date [b]	2,4	NL (mg/L)	NA	NA	NA	1/M	Calculated
Total Phosphorus - Calendar Year [b]	2,4	0.30 mg/L	NA	NA	NA	1/YR	Calculated
Copper, Dissolved	1,2	NL (µg/L)	NL (µg/L)	NA	NA	1/6M	Grab
Zinc, Total Recoverable	1,2	130 µg/L	130 µg/L	NA	NA	1/6M	Grab
Total Hardness (as $CaCo_3$)	1	NL (mg/L)	NA	NA	NA	1/6M	Grab
Chronic Toxicity – *C. dubia* (TU_c)	NA	NA	NA	NA	NL	1/YR	24H-C
Chronic Toxicity – *P. promelas* (TU_c)	NA	NA	NA	NA	NL	1/YR	24H-C

The basis for the limitations codes are:

1. Best Professional Judgement
2. Water Quality Standards
3. Stream Model- Attachments 7 and 8
4. 9VAC25-40 (Nutrient Regulation)

MGD = Million gallons per day.
NA = Not applicable.
NL = No limit; monitor and report.
S.U. = Standard units.
TIRE = Totalizing, indicating and recording equipment.

1/D = Once every day.
1/W = Once every week.
5D/W = Five days a week.
1/M = Once every month.
1/6M = Once every six months.
1/YR = Once every twelve months.
5D/W = Five days a week.

24H-C = A flow proportional composite sample collected manually or automatically, and discretely or continuously, for the entire discharge of the monitored 24-hour period. Where discrete sampling is employed, the permittee shall collect a minimum of twenty-four (24) aliquots for compositing. Discrete sampling may be flow proportioned either by varying the time interval between each aliquot or the volume of each aliquot. Time composite samples consisting of a minimum twenty-four (24) grab samples obtained at hourly or smaller intervals may be collected where the permittee demonstrates that the discharge flow rate (gallons per minute) does not vary by ≥10% or more during the monitored discharge.

Grab = An individual sample collected over a period of time not to exceed 15-minutes.

1/6M = The semi-annual monitoring periods shall be January 1 through June 30 and July 1 through December 31. The DMR shall be submitted no later than the 10th day of the month following the monitoring period (July 10 and January 10, respectively).

1/YR = The annual monitoring period shall be January 1 through December 31. The DMR shall be submitted no later than the 10th day of the month following the monitoring period.

a. Total Nitrogen = Sum of TKN plus Nitrate+Nitrite

b. See Section 20.a. for more information on the Nutrient Calculations

19b. Effluent Limitations/Monitoring Requirements: Outfall 001

Design flow is 2.5 MGD.

Effective Dates: Beginning with the issuance of the Certificate to Operate (CTO) for 2.5 MGD and lasting until the expiration date.

PARAMETER	BASIS FOR LIMITS	DISCHARGE LIMITATIONS				MONITORING REQUIREMENTS	
		Monthly Average	Weekly Average	Minimum	Maximum	Frequency	Sample Type
Flow (MGD)	NA	NL	NA	NA	NL	Continuous	TIRE
pH	2	NA	NA	6.0 S.U.	9.0 S.U.	1/D	Grab
$CBOD_5$	2,3	20 mg/L 190 kg/day	30 mg/L 280 kg/day	NA	NA	5D/W	24H-C
Total Suspended Solids (TSS)	1	20 mg/L 190 kg/day	30 mg/L 280 kg/day	NA	NA	5D/W	24H-C
Dissolved Oxygen (DO)	2	NA	NA	6.5 mg/L	NA	1/D	Grab
Total Kjeldahl Nitrogen (TKN) (April – October)	2,3	3.0 mg/L 63 lb/day	4.5 mg/L 94 lb/day	NA	NA	5D/W	24H-C
Total Kjeldahl Nitrogen (TKN) (November)	2,3	4.0 mg/L 83 lb/day	6.0 mg/L 125 lb/day	NA	NA	5D/W	24H-C
Total Kjeldahl Nitrogen (TKN) (December - May)	2,3	11 mg/L 230 lb/day	16 mg/L 334 lb/day	NA	NA	1/D	24H-C
E. coli (Geometric Mean)	2	126 n/100mls	NA	NA	NA	5D/W	Grab
Nitrate+Nitrite, as N	2,4	NL (mg/L)	NA	NA	NA	1/W	24H-C
Total Nitrogen [a.]	2,4	NL (mg/L)	NA	NA	NA	1/W	Calculated
Total Nitrogen – Year to Date [b.]	2,4	NL (mg/L)	NA	NA	NA	1/M	Calculated
Total Nitrogen - Calendar Year [b.]	2,4	4.0 mg/L	NA	NA	NA	1/YR	Calculated
Total Phosphorus	2	NL (mg/L)	NA	NA	NA	1/W	24H-C
Total Phosphorus – Year to Date [b.]	2,4	NL (mg/L)	NA	NA	NA	1/M	Calculated
Total Phosphorus - Calendar Year [b.]	2,4	0.30 mg/L	NA	NA	NA	1/YR	Calculated
Copper, Dissolved	1,2	NL (µg/L)	NL (µg/L)	NA	NA	1/6M	Grab
Zinc, Total Recoverable	1,2	120 µg/L	120 µg/L	NA	NA	1/6M	Grab
Total Hardness (as $CaCo_3$)	1	NL (mg/L)	NA	NA	NA	1/6M	Grab
Acute Toxicity – *C. dubia* ($_{NOAEC}$)	NA	NA	NA	NA	NL	1/3M	24H-C
Acute Toxicity – *P. promelas* ($_{NOAEC}$)	NA	NA	NA	NA	NL	1/3M	24H-C
Chronic Toxicity – *C. dubia* (TU_c)	NA	NA	NA	NA	NL	1/3M	24H-C
Chronic Toxicity – *P. promelas* (TU_c)	NA	NA	NA	NA	NL	1/3M	24H-C

The basis for the limitations codes are:
1. Best Professional Judgement
2. Water Quality Standards
3. Stream Model- Attachments 7 and 8
4. 9VAC25-40 (Nutrient Regulation)

MGD = Million gallons per day.
NA = Not applicable.
NL = No limit; monitor and report.
S.U. = Standard units.
TIRE = Totalizing, indicating and recording equipment.

1/D = Once every day.
1/W = Once every week.
5D/W = Five days a week.
1/M = Once every month.
1/3M = Once every three months.
1/6M = Once every six months.
1/YR = Once every twelve months.

24H-C = A flow proportional composite sample collected manually or automatically, and discretely or continuously, for the entire discharge of the monitored 24-hour period. Where discrete sampling is employed, the permittee shall collect a minimum of twenty-four (24) aliquots for compositing. Discrete sampling may be flow proportioned either by varying the time interval between each aliquot or the volume of each aliquot. Time composite samples consisting of a minimum twenty-four (24) grab samples obtained at hourly or smaller intervals may be collected where the permittee demonstrates that the discharge flow rate (gallons per minute) does not vary by ≥10% or more during the monitored discharge.

Grab = An individual sample collected over a period of time not to exceed 15-minutes.

1/3M = The quarterly monitoring periods shall be January 1 – March 31, April 1 – June 30, July 1 – September 30, and October 1 – December 31. The DMR shall be submitted no later than the 10th day of the month following the monitoring period (April 10, July 10, October 10 and January 10, respectively).

1/6M = The semi-annual monitoring periods shall be January 1 through June 30 and July 1 through December 31. The DMR shall be submitted no later than the 10th day of the month following the monitoring period (July 10 and January 10, respectively).

1/YR = The annual monitoring period shall be January 1 through December 31. The DMR shall be submitted no later than the 10th day of the month following the monitoring period.

a. Total Nitrogen = Sum of TKN plus Nitrate+Nitrite

b. See Section 20.a. for more information on the Nutrient Calculations

20. Other Permit Requirements:

a) Part I.B. of the permit contains quantification levels and compliance reporting instructions.

9VAC25-31-190.L.4.c. requires an arithmetic mean for measurement averaging and 9VAC25-31-220.D requires limits be imposed where a discharge has a reasonable potential to cause or contribute to an in-stream excursion of water quality criteria. Specific analytical methodologies for toxics are listed in this permit section as well as quantification levels (QLs) necessary to demonstrate compliance with applicable permit limitations or for use in future evaluations to determine if the pollutant has reasonable potential to cause or contribute to a violation. Required averaging methodologies are also specified.

The calculations for the Nitrogen and Phosphorus parameters shall be in accordance with the calculations set forth in 9VAC25-820 *General Virginia Pollutant Discharge Elimination System (VPDES) Watershed Permit Regulation for Total Nitrogen and Total Phosphorus Discharges and Nutrient Trading in the Chesapeake Bay Watershed in Virginia.* §62.1-44.19:13 of the Code of Virginia defines how annual nutrient loads are to be calculated; this is carried forward in 9VAC25-820-70. As annual concentrations (as opposed to loads) are limited in the individual permit, these reporting calculations are intended to reconcile the reporting calculations between the permit programs, as the permittee is collecting a single set of samples for the purpose of ascertaining compliance with two permits.

b) Permit Section Part I.C., details the requirements of a Pretreatment Program.

The VPDES Permit Regulation at 9VAC25-31-730 through 900., and 40 CFR Part 403 requires POTWs with a design flow of >5 MGD and receiving from Industrial Users (IUs) pollutants that pass through or interfere with the operation of the POTW, or are otherwise subject to pretreatment standards, to develop a pretreatment program.

Since this facility discharges greater than 40,000 gallons per day (gpd), pretreatment program conditions in accordance with DEQ guidance are included in Part I.D of the permit to determine if a pretreatment program may be needed.

c) Permit Section Part I.D., details the requirements for Whole Effluent Toxicity (WET) Program.

The VPDES Permit Regulation at 9VAC25-31-210 requires monitoring and 9VAC25-31-220.I, requires limitations in the permit to provide for and assure compliance with all applicable requirements of the State Water Control Law and the Clean Water Act. A WET Program is imposed for municipal facilities with a design rate >1.0 MGD, with an approved pretreatment program or required to develop a pretreatment program, or those determined by the Board based on effluent variability, compliance history, IWC, and receiving stream characteristics.

d) Permit Section Part I.E. details requirements of the Sewage Sludge Management Plan, Sludge Monitoring and Additional Reporting Requirements.

1. Regulations

The VPDES Permit Regulation (9VAC25-31-10 et seq.), has incorporated technical standards for the use or disposal of sewage sludge, specifically land application and surface disposal, promulgated under 40 CFR Part 503.

The Permit Regulation (9VAC25-31-420) also establishes the standards for the use or disposal of sewage sludge. This part establishes standards that consist of general requirements, pollutant limits, management practices, and operational standards for the final use or disposal of sewage sludge generated during the treatment of domestic sewage in the treatment works.

2. Evaluations

Sludge Classification

The Remington WWTP is considered as Class I sludge management facility. The permit regulation (9VAC25-31-500) defines a Class I sludge management facility as any POTW which is required to have an approved pretreatment program defined under Part VII of the VPDES Permit Regulation (9VAC25-31-730 to 900) and/or any treatment works treating domestic sewage sludge that has been classified as a Class I facility by the Board because of the potential for its sewage sludge use or disposal practice to adversely affect public health and the environment.

Sludge Pollutant Concentration

The average pollutant concentrations from sewage sludge analyses provided as part of the Remington WWTP application for the permit reissuance are presented in Table 7. The analysis results are from samples collected during the period from 2008 through 2012.

Table 7 – Remington WWTP Results

Pollutant	Average Concentration (mg/kg dry weight)	Sample Type
Arsenic	7.23	Grab
Cadmium	1.28	Grab
Copper	536.3	Grab
Lead	44.8	Grab
Mercury	0.797	Grab
Molybdenum	9.15	Grab
Nickel	17.6	Grab
Selenium	4.83	Grab
Zinc	1,039.8	Grab

All sewage sludge applied to the land must meet the ceiling concentration for pollutants, listed in Table 8. Sewage sludge applied to the land must also meet either pollutant concentration limits, cumulative pollutant loading rate limits, or annual pollutant loading rate limits, also listed in Table 8.

Cumulative pollutant loading limits or annual pollutant loading limits may be applied to sewage sludge exceeding pollutant concentration limits but meeting the ceiling concentrations, depending upon the levels of treatment achieved and the form (bulk or bag) of sludge applied. It should be noted that ceiling concentration limits are instantaneous values and pollutant concentration limits are monthly average values. Calculations of cumulative pollutant loading should be based on the monthly average values and the annual whole sludge application rate.

Table 8- SEWAGE SLUDGE POLLUTANT LIMITS

Pollutant	Ceiling Concentration Limits for All Sewage Sludge Applied to Land (mg/kg)*	Pollutant Concentration Limits for EQ and PC Sewage Sludge (mg/kg)*	Cumulative Pollutant Loading Rate Limits for CPLR Sewage Sludge (kg/hectare)	Annual Pollutant Rate Limits for APLR Sewage Sludge (kg/hectare/356 day period)**
Arsenic	75	41	41	2.0
Cadmium	85	39	39	1.9
Copper	4,300	1,500	1,500	75
Lead	840	300	300	15
Mercury	57	17	17	0.85
Molybdenum	75	---	---	---
Nickel	420	420	420	21
Selenium	100	100	100	5.0
Zinc	7,500	2,800	2,800	140
Applies to:	All sewage sludge that is land applied	Bulk sewage sludge and bagged sewage sludge	Bulk sewage sludge	Bagged sewage
From VPDES Permit Reg. Part VI	Table 1, 9VAC25-31-540	Table 3, 9VAC25-31-540	Table 2, 9VAC25-31-540	Table 4, 9VAC25-31-540

*Dry-weight basis
**Bagged sewage sludge is sold or given away in a bag or other container.

Comparing data from Table 7 with Table 8 shows that metal concentrations are significantly below the ceiling and PC concentration requirements.

3. Options for Meeting Land Application

There are four equally safe options for meeting land application requirements. The options include the Exceptional Quality (EQ) option, the Pollutant Concentration (PC) option, the Cumulative Pollutant Loading Rate (CPLR) option, and the Annual Pollutant Loading Rate (APLR) option.

Pollutant Concentration (PC) is the type of sludge that may only be applied in bulk and is subject to general requirements and management practices; however, tracking of pollutant loadings to the land is not required. The sludge from the Remington WWTP is considered Pollutant Concentration (PC) sewage sludge for the following reasons:

a) The bulk sewage sludge from the Remington WWTP meets the PC limits in Table 1 of VPDES Permit Regulation Part VI, 9 VAC 25-31-540.

b) The VPDES Permit Regulation, Part VI, Subpart D, (9VAC25-31-690 through 720) establishes the requirements for pathogen reduction in sewage sludge. The Remington WWTP is considered to produce a Class B sludge in accordance with the regulation (9VAC25-31-710.B.2. - Class B -Alternative 2. Alternative 2 defines Class B sludge as "Sewage sludge that is used or disposed that has been treated in a process that is equivalent to a Process to Significantly Reduce Pathogens (PSRP), as described in (9VAC25-31-710.D.). The Remington WWTP treats sludge using an aerobic digestion process to reduce pathogens in accordance with the requirements of (9VAC25-31-710.D.3.).

c) The VPDES Permit Regulation, Part VI, Subpart D, (9VAC25-31-690 through 720) also establishes the requirements for Vector Attraction Reduction in sewage sludge. Based on the information supplied with the VPDES Sludge Application, the Remington WWTP meets the requirements for Vector Attraction Reduction as defined by (9VAC25-31-720.B.1): the mass of volatile solids in the sewage sludge is reduced by a minimum of 38 percent, calculated according to the method in 9VAC25-31-490.B.8. .).

4) Parameters to be Monitored

In order to assure the sludge quality, the following parameters require monitoring: Arsenic, Cadmium, Copper, Lead, Mercury, Molybdenum, Nickel, Selenium, and Zinc.

In order to ensure that proper nutrient management and pH management practices are employed, the following parameters are required: pH, Total Kjeldahl Nitrogen, Ammonia Nitrogen, Nitrate Nitrogen, Total Phosphorus, Total Potassium, and Alkalinity (lime treated sludge should be analyzed for percent calcium carbonate equivalence). The nutrient and pH monitoring requirements apply only if the permittee land applies their own sludge. Since the Fauquier County Water and Sanitation Authority has contracted the land application responsibilities for the Remington WWTP to Recyc Systems, Incorporated, of Remington, Virginia, they are not required to monitor for nutrients, pH, Total Potassium and Alkalinity.

Soil monitoring in conjunction with soil productivity information is critical, especially for frequent applications, to making sound sludge application decisions from both an environmental and an agronomic standpoint. Since the Fauquier County Water and Sanitation Authority has contracted the land application responsibilities for the Remington WWTP to Recyc Systems, Incorporated, of Remington, Virginia, they are not required to perform soil monitoring.

5) Monitoring Frequency

The monitoring frequency is based on the amount of sewage sludge applied in a given 365-day period. The permit application indicates that the total dry metric tons of sewage sludge generated at Remington WWTP are 286.37 dry metric tons per 365-day period. In the permit manual, the monitoring frequency for facilities that produce up to 290 metric tons per 365-day period is once per year. This reissuance proposes a monitoring frequency of once per year (1/YR).

The Remington WWTP is required to provide the results of all monitoring performed in accordance with Part I.A., and information on management practices and appropriate certifications no later than February 19th of each year (as required by the 503 regulations) to the Northern Regional Office of the Department of Environmental Quality. Each report must document the previous calendar year's activities.

6) Sampling

Representative sampling is an important aspect of monitoring. Because the pollutant limits pertain to the quality of the final sewage sludge applied to the land, samples must be collected after the last treatment process prior to land application. Composite samples should be required for all samplings from this facility.

7) Sludge Management Plan (SMP)

The SMP is required to be part of the VPDES permit application. The VPDES Sewage Sludge Permit Application Form and its attachments will constitute the applicant's SMP. Any proposed sewage treatment works treating domestic sewage must submit a SMP with the appropriate VPDES permit application forms at least 180 days prior to the date proposed for commencing operations. The permittee shall conduct all sewage sludge use or disposal activities in accordance with the SMP approved with the issuance of this permit. Any proposed changes in the sewage sludge use or disposal practices or procedures followed by the permittee shall be documented and submitted for Virginia Department of Environmental review and approval no less than 90 days prior to the effective date of the changes.

Upon approval, the SMP becomes an enforceable part of the permit. The permit may be modified or alternatively revoked and reissued to incorporate limitations/conditions necessitated by substantial changes in sewage sludge use or disposal practices.

The Remington WWTP has submitted the VPDES Sewage Sludge Permit Application Form and its attachments. Their SMP dated February 10, 2012, is on file at the Northern Regional Office of the Department of Environmental Quality.

8) Reporting Requirements

The reporting requirements are for POTWs with a design flow rate equal to or greater than 1 MGD (majors), POTWs that serve a population of 10,000 or greater, and Class I sludge management facilities. A permit special condition, which requires these generators to submit an annual report on February 19th of each year, is included. The Remington WWTP shall use the Discharge Monitoring Report (DMR) forms as part of the annual report. A sample form (SP1 and S01) with proper DMR parameter codes and its instructions are provided. In addition to the DMR forms, the generators who land apply sewage sludge are responsible for submitting the additional information required by 9VAC25-31-590, *i.e.*, appropriate certification statements, descriptions of how pathogen and vector attraction reduction requirements are met, descriptions of how the management practices (if applicable) are being met, and descriptions of how site restrictions (if applicable) are being met.

9) Records Keeping

This special condition outlines record retention requirements for sludge meeting Class B pathogen reduction and vector attraction reduction alternative 1-10. Table 9 presents the record keeping requirements.

Table 9: Record Keeping for PC Sludge

1	Pollutant concentrations of each pollutant in Part I.A.3 of the permit;
2	Description of how the pathogen reduction requirement in Part I.A.3 of the permit are met;
3	Description of how the vector attraction requirements in Part I.A.3 of the permit are met;
4	Description of how the management practice specified in the approved Sludge Management Plan and/or the permit are met;
5	Description of how the site restriction specified in the Sludge Management Plan and/or the permit are met;
6	Certification statement in Part I.E.3.b.2.f of the permit.

21. Other Special Conditions:

a) 95% Capacity Reopener. The VPDES Permit Regulation at 9VAC25-31-200.B.4 requires all POTWs and PVOTWs develop and submit a plan of action to DEQ when the monthly average influent flow to their sewage treatment plant reaches 95% or more of the design capacity authorized in the permit for each month of any three consecutive month period. This facility is a POTW.

b) Indirect Dischargers. Required by VPDES Permit Regulation, 9VAC25-31-200 B.1 and B.2 for POTWs and PVOTWs that receive waste from someone other than the owner of the treatment works.

c) O&M Manual Requirement. Required by Code of Virginia §62.1-44.19; Sewage Collection and Treatment Regulations, 9VAC25-790; VPDES Permit Regulation, 9VAC25-31-190.E. The permittee shall maintain a current Operations and Maintenance (O&M) Manual. The permittee shall operate the treatment works in accordance with the O&M Manual and shall make the O&M Manual available to Department personnel for review upon request. Any changes in the practices and procedures followed by the permittee shall be documented in the O&M Manual within 90 days of the effective date of the changes. Non-compliance with the O&M Manual shall be deemed a violation of the permit.

d) CTC, CTO Requirement. The Code of Virginia § 62.1-44.19; Sewage Collection and Treatment Regulations, 9VAC25-790 requires that all treatment works treating wastewater obtain a Certificate to Construct prior to commencing construction and to obtain a Certificate to Operate prior to commencing operation of the treatment works.

e) Licensed Operator Requirement. The Code of Virginia at §54.1-2300 et seq. and the VPDES Permit Regulation at 9VAC25-31-200 C, and Rules and Regulations for Waterworks and Wastewater Works Operators (18VAC160-20-10 et seq.) requires licensure of operators. This facility requires a Class II operator.

f) Reliability Class. The Sewage Collection and Treatment Regulations at 9VAC25-790 require sewage treatment works to achieve a certain level of reliability in order to protect water quality and public health consequences in the event of component or system failure. Reliability means a measure of the ability of the treatment works to perform its designated function without failure or interruption of service. The facility is required to meet a reliability Class of I.

g) Water Quality Criteria Reopener. The VPDES Permit Regulation at 9VAC25-31-220 D. requires establishment of effluent limitations to ensure attainment/maintenance of receiving stream water quality criteria. Should data collected and submitted for Attachment A of the permit, indicate the need for limits to ensure protection of water quality criteria, the permit may be modified or alternately revoked and reissued to impose such water quality-based limitations..

h) Water Quality Criteria Monitoring. State Water Control Law §62.1-44.21 authorizes the Board to request information needed to determine the discharge's impact on State waters. States are required to review data on discharges to identify actual or potential toxicity problems, or the attainment of water quality goals, according to 40 CFR Part 131, Water Quality Standards, subpart 131.11. To ensure that water quality criteria are maintained, the permittee is required to analyze the facility's effluent for the substances noted in Attachment A of this VPDES permit.

i) E3/E4. 9VAC25-40-70 B authorizes DEQ to approve an alternate compliance method to the technology-based effluent concentration limitations as required by subsection A of this section. Such alternate compliance method shall be incorporated into the permit of an Exemplary Environmental Enterprise (E3) facility or an Extraordinary Environmental Enterprise (E4) facility to allow the suspension of applicable technology-based effluent concentration limitations during the period the E3 or E4 facility has a fully implemented environmental management system that includes operation of installed nutrient removal technologies at the treatment efficiency levels for which they were designed.

j) Nutrient Reopener. 9VAC25-40-70 A authorizes DEQ to include technology-based annual concentration limits in the permits of facilities that have installed nutrient control equipment, whether by new construction, expansion or upgrade. 9VAC25-31-390 A authorizes DEQ to modify VPDES permits to promulgate amended water quality standards.

k) TMDL Reopener: This special condition is to allow the permit to reopened if necessary to bring it in compliance with any applicable TMDL that may be developed and approved for the receiving stream.

l) Hauled Waste: The permitee shall retain a record of the type, quantity, and source of hauled waste accepted at the treatment works along with any analyses for a three-year period. This information shall be available for review during inspections and shall be submitted with the reapplication package at the time of the next permit reissuance.

Permit Section Part II. Part II of the permit contains standard conditions that appear in all VPDES Permits. In general, these standard conditions address the responsibilities of the permittee, reporting requirements, testing procedures and records retention.

22. Changes to the Permit from the Previously Issued Permit:

a) Special Conditions:
1. The O&M special condition has been revised to be consistent with current agency practice.
2. The Sludge Reopener special condition has been removed from the permit as the language is incorporated in Part I.E (Sewage Sludge Management Plan, Sludge Monitoring and Additional Reporting Requirements) of the permit.
3. The Sludge Use and Disposal special condition has been removed from the permit as the language is incorporated in Part I.E (Sludge Management and Reporting Requirements) of the permit.
4. A Hauled Waste special condition has been added with this reissuance.

b) Monitoring and Effluent Limitations:
1. The weekly average limit for TKN (November) at the 2.0 MGD flow tier has been changed from 11 mg/L to 8.4 mg/L as a result of a calculation correction.
2. The weekly average mass loading limit for TKN (November) at the 2.0 MGD flow tier has been revised from 180 lbs/day to 140 lbs/day based on the correction to the weekly average limit.
3. The weekly average limit for TKN (November) at the 2.5 MGD flow tier has been changed from 4.0 mg/L to 6.0 mg/L as a result of a calculation correction.
4. The weekly average mass loading limit for TKN (November) at the 2.5 MGD flow tier has been revised from 83 lbs/day to 125 lbs/day based on the correction to the weekly average limit.
5. The weekly average limit for TKN (December - March) at the 2.5 MGD flow tier has been changed from 14 mg/L to 16 mg/L as a result of a calculation correction.
6. The weekly average mass loading limit for TKN (December - March) at the 2.5 MGD flow tier has been revised from 290 lbs/day to 334 lbs/day based on the correction to the weekly average limit.
7. A monthly average and weekly average total recoverable zinc limit of 130 µg/L has been established at the 2.0 MGD flow tier
8. The monthly average and weekly average total recoverable zinc limit of 160 µg/L has been revised to a monthly average and weekly average total recoverable zinc limit of 120 µg/L at 2.5 MGD flow tier
9. Dissolved copper monitoring has been added at both the 2.0 MGD and 2.5 MGD flow tiers at a frequency of once every six months.
10. Total hardness monitoring has been added at both the 2.0 MGD and 2.5 MGD flow tiers at a frequency of once every six months.
11. The Total Nitrogen calendar year effluent limit of 8.0 mg/L has been revised to 4.0 mg/L at both the 2.0 MGD and 2.5 MGD flow tiers based on a contract modification to the FCWS's point source grant and operation and maintenance agreement (Contract #440-S-09-14).
12. The Total Phosphorus calendar year effluent limit of 1.5 mg/L has been revised to 0.30 mg/L at both the 2.0 MGD and 2.5 MGD flow tiers based on a contract modification to the FCWS's point source grant and operation and maintenance agreement (Contract #440-S-09-14).
13. The Toxicity Management Program (TMP) name has changed from TMP to Whole Effluent Toxicity Program (WET). This change is reflected within the draft permit to be consistent with current agency practice.
14. Acute toxicity monitoring has been added to the 2.5 MGD flow tier with this reissuance to be consistent with current agency practice.

c) Other:
1. The requirement to perform an Industrial User Survey has been included with this reissuance. If significant industrial users or categorical industries are found, the FCWSA shall develop and implement a pretreatment program.
2. Part II.A (Monitoring) of the permit has been updated to incorporate the Virginia Environmental Laboratory Accreditation Program (VELAP) requirements for laboratory analysis.

23. Variances/Alternate Limits or Conditions: None

24. Public Notice Information:

First Public Notice Date: June 26, 2013 Second Public Notice Date: July 3, 2013

Public Notice Information is required by 9VAC25-31-280 B. All pertinent information is on file and may be inspected, and copied by contacting the: DEQ Northern Regional Office, 13901 Crown Court, Woodbridge, VA 22193, Telephone No. (703) 583-3853, susan.mackert@deq.virginia.gov. See Attachment 11 for a copy of the public notice document.

Persons may comment in writing or by email to the DEQ on the proposed permit action, and may request a public hearing, during the comment period. Comments shall include the name, address, and telephone number of the writer and of all persons represented by the commenter/requester, and shall contain a complete, concise statement of the factual basis for comments. Only those comments received within this period will be considered. The DEQ may decide to hold a public hearing, including another comment period, if public response is significant and there are substantial, disputed issues relevant to the permit. Requests for public hearings shall state 1) the reason why a hearing is requested; 2) a brief, informal statement regarding the nature and extent of the interest of the requester or of those represented by the requester, including how and to what extent such interest would be directly and adversely affected by the permit; and 3) specific references, where possible, to terms and conditions of the permit with suggested revisions. Following the comment period, the Board will make a determination regarding the proposed permit action. This determination will become effective, unless the DEQ grants a public hearing. Due notice of any public hearing will be given. The public may request an electronic copy of the draft permit and fact sheet or review the draft permit and application at the DEQ Northern Regional Office by appointment.

25. Reclamation and Reuse:

The Old Dominion Electric Cooperative (ODEC) Marsh Run Generation Station (VA0091448) receives effluent from the Remington WWTP. The effluent is further treated by ODEC using reverse osmosis prior to use within the generation station. The purified water is stored until used or is returned to the Remington WWTP as a wastewater return stream for treatment. Because ODEC is an off peak facility that generally operates during the winter months when additional electricity is needed for the power grid, effluent is periodically returned to the Remington WWTP during the cold weather months.

The FCWSA has a contract with ODEC to not exceed 37,500 gallons per day discharged to the Remington WWTP. The ODEC effluent reuse agreement requires ODEC to comply with applicable water quality standards as required by the VPDES permit for Remington WWTP.

The requirements of 9VAC25-740, Water Reclamation and Reuse Regulation, are not applicable as the reuse agreement was in place prior to October 1, 2008. Should any modification or upgrade of the Remington WWTP to produce Level 1 reclaimed water take place or more than 500,000 gallons of reclaimed water be sent to the ODEC – Marsh Run Generation Station the requirements of 9VAC25-740 will be applied.

26. Additional Comments:
Previous Board Action(s): None

Staff Comments: FCWSA requested a change in the *E. coli* sampling time from 10 am to 9am and a reduction in monitoring frequency for *E. coli*, $CBOD_5$, TSS and TKN (April – October) from five days per week to three days per week, and the removal of zinc monitoring. These requests cannot be granted at this time.

Public Comment: No comments were received during the public comment period.

EPA Checklist: The checklist can be found in Attachment 12.

Fact Sheet Attachments – Table of Contents

Remington WWTP
VA0076805

2013 Reissuance

Attachment 1	Flow Frequency Determination
Attachment 2	Facility Flow Diagram
Attachment 3	Topographic Map
Attachment 4	List of Discharges to Waterbody
Attachment 5	Planning Statement
Attachment 6	Wasteload Allocation Analysis and Supporting Documentation
Attachment 7	Dissolved Oxygen Model - 1990
Attachment 8	Dissolved Oxygen Model - 1996
Attachment 9	Zinc Limit Derivation
Attachment 10	Copper Limit Derivation
Attachment 11	Public Notice
Attachment 12	EPA Checklist

MEMORANDUM

VIRGINIA DEPARTMENT OF ENVIRONMENTAL QUALITY

NORTHERN VIRGINIA REGIONAL OFFICE

13901 Crown Court Woodbridge, VA 22193

SUBJECT: Flow Frequency Determination
Remington WWTP (VA0076805)

TO: Permit Reissuance File

FROM: Susan Mackert

DATE: November 26, 2012

The Remington Wastewater Treatment Plant discharges to the Rappahannock River near Remington, Virginia. Stream flow frequencies are required at this site for use in developing effluent limitations for the VPDES permit. This memo supersedes the November 19, 2001, and March 20, 2007, flow frequency determination memos concerning the subject VPDES permit.

During the previous reissuance of the permit, a drainage area of 632 square miles was utilized. With the 2013 reissuance, DEQ staff utilized GIS and determined the drainage area to be 620 square miles. This drainage area is reflected within the planning statement (see Attachment 5). DEQ staff has compared the flow frequency determinations for both the 620 and 632 square mile drainage areas and finds no significant difference. It is staff's best professional judgement that a drainage area of 632 square miles be used as it provides consistency with the previous permit.

Rappahannock River at Remington, VA (#01664000):

Drainage Area = 620 mi^2

1Q10	=	5.5 MGD	High Flow 1Q10	=	50 MGD
7Q10	=	6.4 MGD	High Flow 7Q10	=	63 MGD
30Q5	=	12 MGD	High Flow 30Q10	=	88 MGD
30Q10	=	21 MGD	Harmonic Mean	=	100 MGD

Rappahannock River at discharge point:

Drainage Area = 632 mi^2

1Q10	=	5.6 MGD	High Flow 1Q10	=	52 MGD
7Q10	=	6.4 MGD	High Flow 7Q10	=	64 MGD
30Q5	=	12 MGD	High Flow 30Q10	=	89 MGD
30Q10	=	21 MGD	Harmonic Mean	=	101 MGD

The high flow months are December through May.

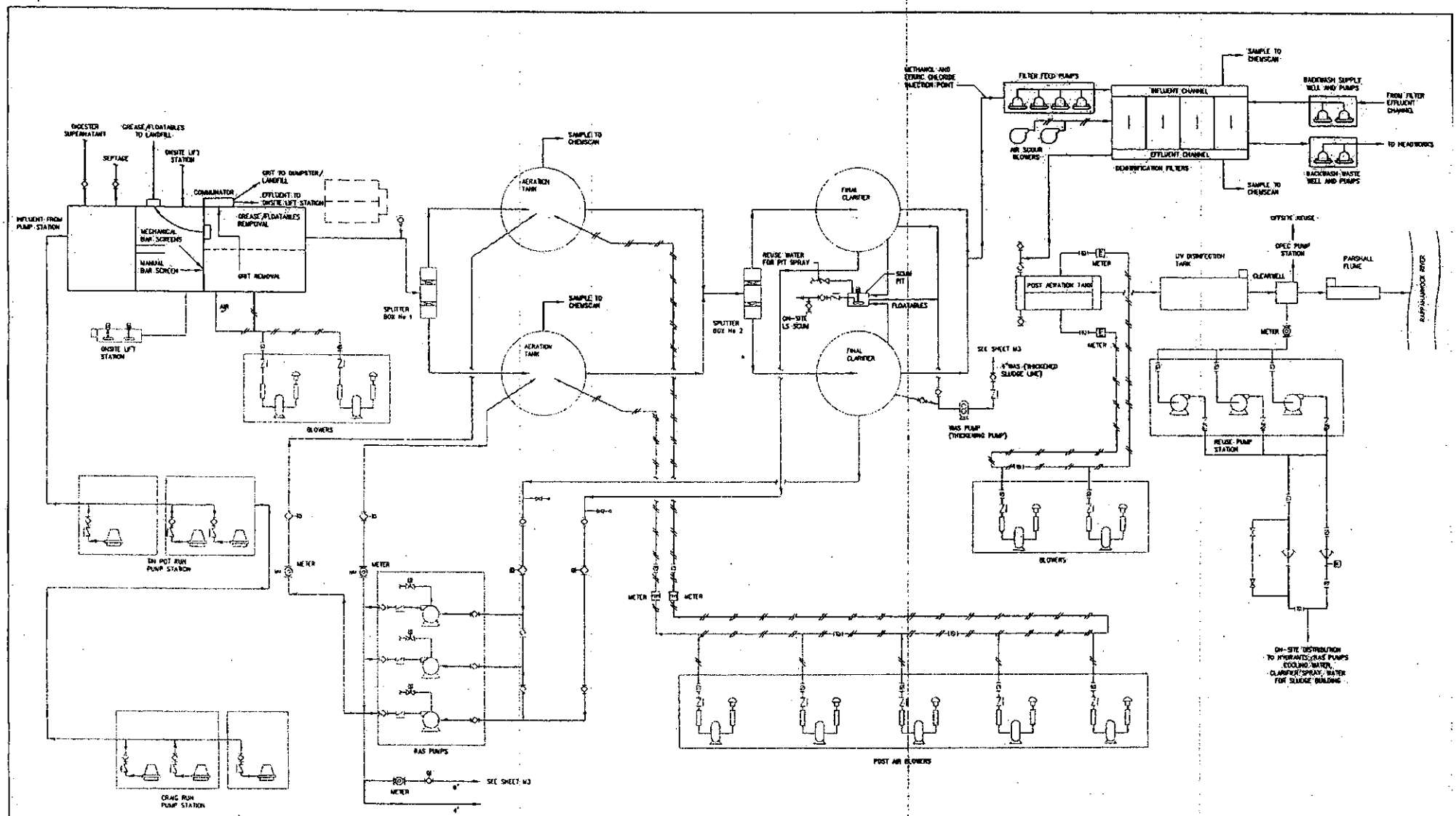

NO.	ISSUED FOR	DATE	BY
2	PER ADDENDUM 1	02/24/09	CTJ
1	ISSUED FOR BID	12/17/08	TDH

DESIGNED SEL
DRAWN TDH
CHECKED
PROJ. ENGR. CTJ
APPROVED

THIS DOCUMENT ORIGINALLY ISSUED FOR CONSTRUCTION AND SEALED BY RONALD L. TAYLOR, LICENSE NUMBER 24619.

THIS MEDIA SHALL NOT BE CONSIDERED A CERTIFIED DOCUMENT.

THIS DOCUMENT ORIGINALLY ISSUED FOR CONSTRUCTION AND SEALED BY CHARLES T. JOHNSON, LICENSE NUMBER 43610.

THIS MEDIA SHALL NOT BE CONSIDERED A CERTIFIED DOCUMENT

HAZEN AND SAWYER
Environmental Engineers & Scientists
4011 WestChase Boulevard, Suite 500
Raleigh, North Carolina 27607

FAUQUIER COUNTY
WATER AND SANITATION AUTHORITY
VIRGINIA

REMINGTON WASTEWATER TREATMENT PLANT
ENHANCED NUTRIENT REMOVAL UPGRADE

MECHANICAL
MAIN PROCESS FLOW DIAGRAM

THE SCALE BAR SHOWN BELOW MEASURES ONE INCH LONG ON THE ORIGINAL DRAWING.

DATE DECEMBER 2008
HAZEN JOB NUMBER 30554-007
CONTRACT NUMBER -
DRAWING NUMBER M2

Attachment 2
Page 1 of 1

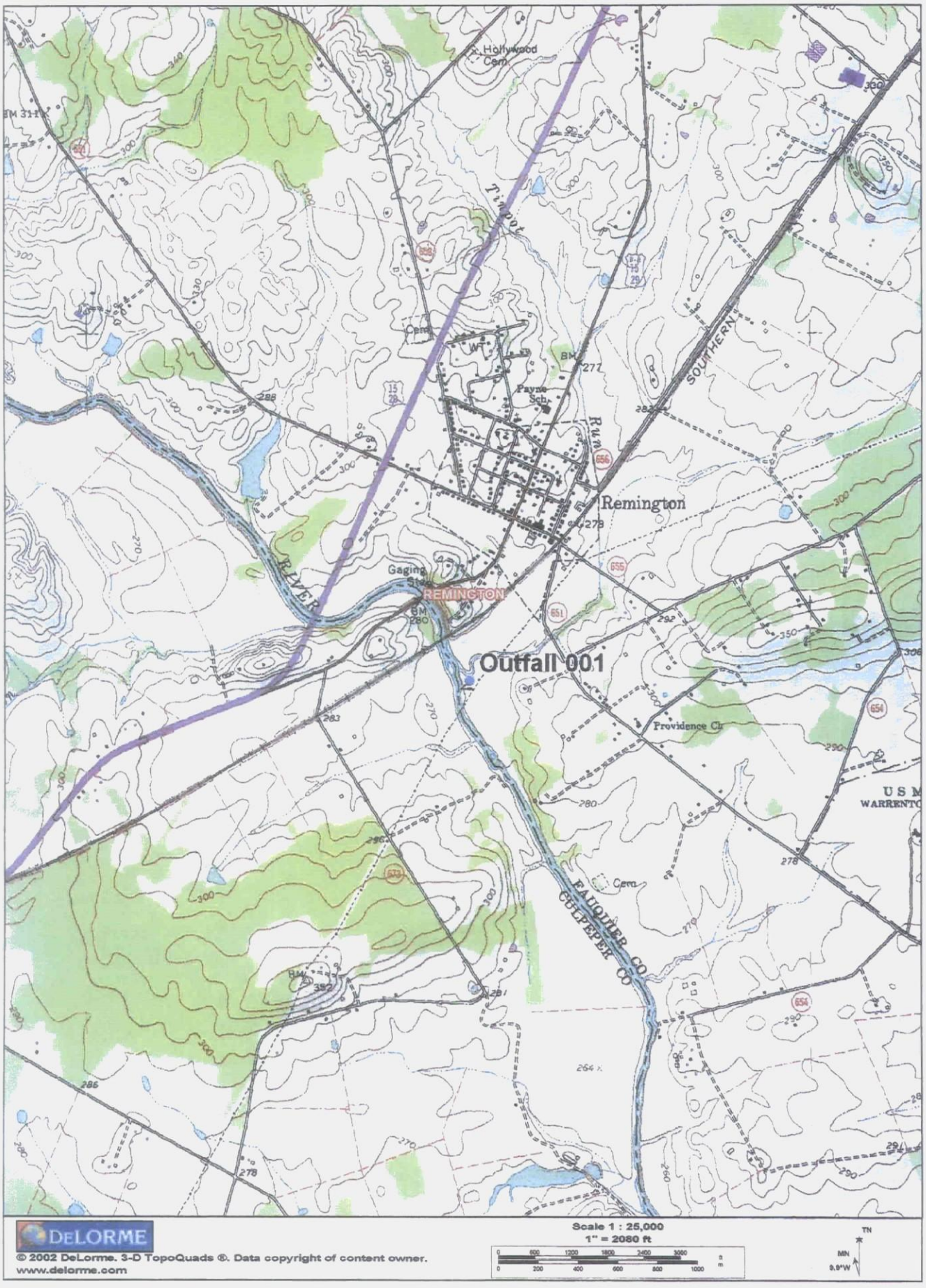
Hollywood Cem
Tiffett
Cem
Payne Sch
Run
SOUTHERN
Remington
Gaging Sta
REMINGTON
RIVER
Outfall 001
Providence Ch
FAUQUIER CO
CULPEPER CO
Cem
DeLORME
© 2002 DeLorme. 3-D TopoQuads ®. Data copyright of content owner.
www.delorme.com
Scale 1 : 25,000
1" = 2080 ft
TN
MN
9.9°W

The facilities listed below either discharge to or are located within the waterbody VAN-E08R, and discharge to a receiving stream other than the Rappahannock River or an unnamed tributary to the Rappahannock River.	
VA0064726	Mary Walter Elementary School (Marsh Run, UT*)
*UT – Unnamed Tributary	
VA0068586	Culpeper County Industrial Airpark STP (Hubbard Run)
VA0091448	Old Dominion Electric Cooperative – Marsh Run (Marsh Run, UT)
VAG406023	Dixie M. Compton Residence (Hubbard Run, UT)
VAG406056	Mark E. Hanna Residence (Craig Run)
VAG406074	Martin D. Cogan Residence (Marsh Run)
VAG406084	Dorothy Coles and Jonathan Davis Residence (Marsh Run, UT)
VAG406119	James H. Weeks IV Residence (Brown's Run, UT)
VAG406145	William A. Bailey Residence (Brown's Run, UT)
VAG406201	James Woodson Residence (Brown's Run, UT)
VAG406232	Kastle Greens Golf Course (Brown's Run, UT)
VAG406311	Eastern Clearing, Incorporated (Marsh Run, UT)
VAG406312	John C. Kandl Residence (Brown's Run, UT)
VAG406358	Garret Street Property (Hubbard Run, UT)
VAG406365	Culpeper Farmers Cooperative, Incorporated (Harpers Run)
VAG406448	Family Worship Center (Brown's Run, UT)
VAG840110	Luck Stone – Bealeton Plant (Craig Run, UT)
VAG110110	Crider and Shockey, Incorporated (Marsh Run)
VAR050905	Lane Enterprises, Incorporated – Lane Metal Product Division (Marsh Run)
VAR050920	Superior Paving Corporation - Bealeton Plant (Marsh Run)
VAR050984	Culpeper County Airport (Hubbard Run, UT)
VAR051665	U.S. Greenfiber, LLC (Hubbard Run, UT)
VAR051743	Colonial Pipeline – Remington (Brown's Run, UT)
VAR052079	Remington Auto Parts, Incorporated (Marsh Run, UT)

To:	Susan Mackert
From:	Jennifer Carlson
Date:	October 4, 2012
Subject:	Planning Statement for Remington WWTP
Permit Number:	VA0076805

Information for Outfall 001:

Discharge Type: Municipal
Discharge Flow: 2.0 MGD
Receiving Stream: Rappahannock River
Latitude / Longitude: 38° 31' 33" / -77° 48' 42"
Rivermile: 146.6
Streamcode: 3-RPP
Waterbody: VAN-E08R
Water Quality Standards: Basin 3, Class III, Section 3
Drainage Area: 620 mi^2

1. Please provide water quality monitoring information for the receiving stream segment. If there is not monitoring information for the receiving stream segment, please provide information on the nearest downstream monitoring station, including how far downstream the monitoring station is from the outfall.

   The portion of the Rappahannock River that Outfall 001 discharges into is not monitored and assessed. There is a water quality monitoring station located downstream on the Rappahannock River. The next downstream DEQ water quality monitoring station is 3-RPP142.36, located at the Route 620 bridge crossing, approximately 4.2 miles downstream of Outfall 001. The following is the monitoring summary for this segment of the Rappahannock River, as taken from the Draft 2012 Integrated Report*:

   Class III, Section 3.

   DEQ monitoring station 3-RPP142.36, at Route 620.

   E. coli monitoring finds a bacterial impairment, resulting in an impaired classification for the recreation use. The aquatic life, fish consumption, and wildlife uses are considered fully supporting.

   **The Draft 2012 Integrated Report (IR) has been through the public comment period and reviewed by EPA. The 2012 IR is currently being finalized and prepared for release.*

2. Does this facility discharge to a stream segment on the 303(d) list? If yes, please fill out Table A.

   No.

3. Are there any downstream 303(d) listed impairments that are relevant to this discharge? If yes, please fill out Table B.

   Yes.

Table B. Information on Downstream 303(d) Impairments and TMDLs

Waterbody Name	Impaired Use	Cause	Distance From Outfall	TMDL completed	WLA	Basis for WLA	TMDL Schedule
Impairment Information in the Draft 2012 Integrated Report*							
Rappahannock River	Recreation	*E. coli*	1.6 miles	Rappahannock River Basin Bacteria 01/23/2008	4.35E+12 cfu/year *E. coli*	126 cfu/100ml --- 2.5 MGD	---

**The Draft 2012 Integrated Report (IR) has been through the public comment period and reviewed by EPA. The 2012 IR is currently being finalized and prepared for release.*

4. Is there monitoring or other conditions that Planning/Assessment needs in the permit?

   The tidal Rappahannock River, which is located approximately 33 miles downstream of this facility, is listed with a PCB impairment. In support for the PCB TMDL that is scheduled for development by 2016 for the tidal Rappahannock River, this facility is a candidate for low-level PCB monitoring, based upon its designation as a major municipal facility. Low-level PCB analysis uses EPA Method 1668, which is capable of detecting low-level concentrations for all 209 PCB congeners. DEQ staff has concluded that low-level PCB monitoring is not warranted for this facility, as there are not any stream segments immediately downstream of the facility that are listed with a PCB impairment. Fish tissue monitoring has been conducted on the free flowing Rappahannock River and there have been no exceedances of the fish tissue criterion for PCBs. Based upon this information, this facility will not be requested to monitor for low-level PCBs.

   There is a completed downstream TMDL for the aquatic life use impairment for the Chesapeake Bay. However, the Bay TMDL and the WLAs contained within the TMDL are not addressed in this planning statement.

5. Fact Sheet Requirements – Please provide information regarding any drinking water intakes located within a 5 mile radius of the discharge point.

   There are no public water supply intakes located within 5 miles of this discharge.

FRESHWATER
WATER QUALITY CRITERIA / WASTELOAD ALLOCATION ANALYSIS

Facility Name: Remington WWTP - 2.0 MGD

Permit No.: VA0076805

Receiving Stream: Rappahannock River

Version: OWP Guidance Memo 00-2011 (8/24/00)

Stream Information

Mean Hardness (as CaCO3) =	25.5	mg/L
90% Temperature (Annual) =	26.2	deg C
90% Temperature (Wet season) =	13.9	deg C
90% Maximum pH =	7.2	SU
10% Maximum pH =		SU
Tier Designation (1 or 2) =	2	
Public Water Supply (PWS) Y/N? =	n	
Trout Present Y/N? =	n	
Early Life Stages Present Y/N? =	y	

Stream Flows

1Q10 (Annual) =	5.6	MGD
7Q10 (Annual) =	6.4	MGD
30Q10 (Annual) =	12	MGD
1Q10 (Wet season) =	52	MGD
30Q10 (Wet season)	89	MGD
30Q5 =	81	MGD
Harmonic Mean =	101	MGD

Mixing Information

Annual - 1Q10 Mix =	5.75	%
- 7Q10 Mix =	100	%
- 30Q10 Mix =	100	%
Wet Season - 1Q10 Mix =	33.99	%
- 30Q10 Mix =	100	%

Effluent Information

Mean Hardness (as CaCO3) =	372	mg/L
90% Temp (Annual) =	25	deg C
90% Temp (Wet season) =	25	deg C
90% Maximum pH =	8.3	SU
10% Maximum pH =		SU
Discharge Flow =	2	MGD

Parameter	Background	Water Quality Criteria				Wasteload Allocations				Antidegradation Baseline				Antidegradation Allocations				**Most Limiting Allocations**			
(ug/l unless noted)	Conc.	Acute	Chronic	HH (PWS)	HH	Acute	Chronic	HH (PWS)	HH	Acute	Chronic	HH (PWS)	HH	Acute	Chronic	HH (PWS)	HH	**Acute**	**Chronic**	**HH (PWS)**	**HH**
Acenapthene	0	--	--	na	9.9E+02	--	--	na	4.1E+04	--	--	na	9.9E+01	--	--	na	4.1E+03	--	--	na	**4.1E+03**
Acrolein	0	--	--	na	9.3E+00	--	--	na	3.9E+02	--	--	na	9.3E-01	--	--	na	3.9E+01	--	--	na	**3.9E+01**
Acrylonitrile[c]	0	--	--	na	2.5E+00	--	--	na	1.3E+02	--	--	na	2.5E-01	--	--	na	1.3E+01	--	--	na	**1.3E+01**
Aldrin [c]	0	3.0E+00	--	na	5.0E-04	3.5E+00	--	na	2.6E-02	7.5E-01	--	na	5.0E-05	2.9E+00	--	na	2.6E-03	**2.9E+00**	--	na	**2.6E-03**
Ammonia-N (mg/l) (Yearly)	0	1.04E+01	2.48E+00	na	--	1.21E+01	1.73E+01	na	--	6.39E+00	6.19E-01	na	--	2.43E+01	4.33E+00	na	--	**1.21E+01**	**4.33E+00**	na	--
Ammonia-N (mg/l) (High Flow)	0	2.81E+01	5.36E+00	na	--	2.77E+02	2.44E+02	na	--	7.26E+00	1.34E+00	na	--	1.96E+02	6.10E+01	na	--	**1.96E+02**	**6.10E+01**	na	--
Anthracene	0	--	--	na	4.0E+04	--	--	na	1.7E+06	--	--	na	4.0E+03	--	--	na	1.7E+05	--	--	na	**1.7E+05**
Antimony	0	--	--	na	6.4E+02	--	--	na	2.7E+04	--	--	na	6.4E+01	--	--	na	2.7E+03	--	--	na	**2.7E+03**
Arsenic	0	3.4E+02	1.5E+02	na	--	3.9E+02	6.3E+02	na	--	8.5E+01	3.8E+01	na	--	3.2E+02	1.6E+02	na	--	**3.2E+02**	**1.6E+02**	na	--
Barium	0	--	--	na	--	--	--	na	--	--	--	na	--	--	--	na	--	--	--	na	--
Benzene [c]	0	--	--	na	5.1E+02	--	--	na	2.6E+04	--	--	na	5.1E+01	--	--	na	2.6E+03	--	--	na	**2.6E+03**
Benzidine[c]	0	--	--	na	2.0E-03	--	--	na	1.0E-01	--	--	na	2.0E-04	--	--	na	1.0E-02	--	--	na	**1.0E-02**
Benzo (a) anthracene [c]	0	--	--	na	1.8E-01	--	--	na	9.3E+00	--	--	na	1.8E-02	--	--	na	9.3E-01	--	--	na	**9.3E-01**
Benzo (b) fluoranthene [c]	0	--	--	na	1.8E-01	--	--	na	9.3E+00	--	--	na	1.8E-02	--	--	na	9.3E-01	--	--	na	**9.3E-01**
Benzo (k) fluoranthene [c]	0	--	--	na	1.8E-01	--	--	na	9.3E+00	--	--	na	1.8E-02	--	--	na	9.3E-01	--	--	na	**9.3E-01**
Benzo (a) pyrene [c]	0	--	--	na	1.8E-01	--	--	na	9.3E+00	--	--	na	1.8E-02	--	--	na	9.3E-01	--	--	na	**9.3E-01**
Bis2-Chloroethyl Ether [c]	0	--	--	na	5.3E+00	--	--	na	2.7E+02	--	--	na	5.3E-01	--	--	na	2.7E+01	--	--	na	**2.7E+01**
Bis2-Chloroisopropyl Ether	0	--	--	na	6.5E+04	--	--	na	2.7E+06	--	--	na	6.5E+03	--	--	na	2.7E+05	--	--	na	**2.7E+05**
Bis 2-Ethylhexyl Phthalate [c]	0	--	--	na	2.2E+01	--	--	na	1.1E+03	--	--	na	2.2E+00	--	--	na	1.1E+02	--	--	na	**1.1E+02**
Bromoform [c]	0	--	--	na	1.4E+03	--	--	na	7.2E+04	--	--	na	1.4E+02	--	--	na	7.2E+03	--	--	na	**7.2E+03**
Butylbenzylphthalate	0	--	--	na	1.9E+03	--	--	na	7.9E+04	--	--	na	1.9E+02	--	--	na	7.9E+03	--	--	na	**7.9E+03**
Cadmium	0	1.5E+01	1.2E+00	na	--	1.7E+01	5.1E+00	na	--	1.2E+00	3.0E-01	na	--	4.4E+00	1.3E+00	na	--	**4.4E+00**	**1.3E+00**	na	--
Carbon Tetrachloride [c]	0	--	--	na	1.6E+01	--	--	na	8.2E+02	--	--	na	1.6E+00	--	--	na	8.2E+01	--	--	na	**8.2E+01**
Chlordane [c]	0	2.4E+00	4.3E-03	na	8.1E-03	2.8E+00	1.8E-02	na	4.2E-01	6.0E-01	1.1E-03	na	8.1E-04	2.3E+00	4.5E-03	na	4.2E-02	**2.3E+00**	**4.5E-03**	na	**4.2E-02**
Chloride	0	8.6E+05	2.3E+05	na	--	1.0E+06	9.7E+05	na	--	2.2E+05	5.8E+04	na	--	8.2E+05	2.4E+05	na	--	**8.2E+05**	**2.4E+05**	na	--
TRC	0	1.9E+01	1.1E+01	na	--	2.2E+01	4.6E+01	na	--	4.8E+00	2.8E+00	na	--	1.8E+01	1.2E+01	na	--	**1.8E+01**	**1.2E+01**	na	--
Chlorobenzene	0	--	--	na	1.6E+03	--	--	na	6.6E+04	--	--	na	1.6E+02	--	--	na	6.6E+03	--	--	na	**6.6E+03**

Parameter	Background	Water Quality Criteria				Wasteload Allocations				Antidegradation Baseline				Antidegradation Allocations				Most Limiting Allocations			
(ug/l unless noted)	Conc.	Acute	Chronic	HH (PWS)	HH	Acute	Chronic	HH (PWS)	HH	Acute	Chronic	HH (PWS)	HH	Acute	Chronic	HH (PWS)	HH	Acute	Chronic	HH (PWS)	HH
Chlorodibromomethane[C]	0	--	--	na	1.3E+02	--	--	na	6.7E+03	--	--	na	1.3E+01	--	--	na	6.7E+02	--	--	na	6.7E+02
Chloroform	0	--	--	na	1.1E+04	--	--	na	4.6E+05	--	--	na	1.1E+03	--	--	na	4.6E+04	--	--	na	4.6E+04
2-Chloronaphthalene	0	--	--	na	1.6E+03	--	--	na	6.6E+04	--	--	na	1.6E+02	--	--	na	6.6E+03	--	--	na	6.6E+03
2-Chlorophenol	0	--	--	na	1.5E+02	--	--	na	6.2E+03	--	--	na	1.5E+01	--	--	na	6.2E+02	--	--	na	6.2E+02
Chlorpyrifos	0	8.3E-02	4.1E-02	na	--	9.6E-02	1.7E-01	na	--	2.1E-02	1.0E-02	na	--	7.9E-02	4.3E-02	na	--	7.9E-02	4.3E-02	na	--
Chromium III	0	1.5E+03	7.9E+01	na	--	1.7E+03	3.3E+02	na	--	1.6E+02	2.0E+01	na	--	6.1E+02	8.3E+01	na	--	6.1E+02	8.3E+01	na	--
Chromium VI	0	1.6E+01	1.1E+01	na	--	1.9E+01	4.6E+01	na	--	4.0E+00	2.8E+00	na	--	1.5E+01	1.2E+01	na	--	1.5E+01	1.2E+01	na	--
Chromium, Total	0	--	--	1.0E+02	--	--	--	na	--	--	--	1.0E+01	--	--	--	4.2E+02	--	--	--	na	--
Chrysene[C]	0	--	--	na	1.8E-02	--	--	na	9.3E-01	--	--	na	1.8E-03	--	--	na	9.3E-02	--	--	na	9.3E-02
Copper	0	4.1E+01	9.6E+00	na	--	4.7E+01	4.0E+01	na	--	3.9E+00	2.4E+00	na	--	1.5E+01	1.0E+01	na	--	1.5E+01	1.0E+01	na	--
Cyanide, Free	0	2.2E+01	5.2E+00	na	1.6E+04	2.6E+01	2.2E+01	na	6.6E+05	5.5E+00	1.3E+00	na	1.6E+03	2.1E+01	5.5E+00	na	6.6E+04	2.1E+01	5.5E+00	na	6.6E+04
DDD[C]	0	--	--	na	3.1E-03	--	--	na	1.6E-01	--	--	na	3.1E-04	--	--	na	1.6E-02	--	--	na	1.6E-02
DDE[C]	0	--	--	na	2.2E-03	--	--	na	1.1E-01	--	--	na	2.2E-04	--	--	na	1.1E-02	--	--	na	1.1E-02
DDT[C]	0	1.1E+00	1.0E-03	na	2.2E-03	1.3E+00	4.2E-03	na	1.1E-01	2.8E-01	2.5E-04	na	2.2E-04	1.0E+00	1.1E-03	na	1.1E-02	1.0E+00	1.1E-03	na	1.1E-02
Demeton	0	--	1.0E-01	na	--	--	4.2E-01	na	--	--	2.5E-02	na	--	--	1.1E-01	na	--	--	1.1E-01	na	--
Diazinon	0	1.7E-01	1.7E-01	na	--	2.0E-01	7.1E-01	na	--	4.3E-02	4.3E-02	na	--	1.6E-01	1.8E-01	na	--	1.6E-01	1.8E-01	na	--
Dibenz(a,h)anthracene[C]	0	--	--	na	1.8E-01	--	--	na	9.3E+00	--	--	na	1.8E-02	--	--	na	9.3E-01	--	--	na	9.3E-01
1,2-Dichlorobenzene	0	--	--	na	1.3E+03	--	--	na	5.4E+04	--	--	na	1.3E+02	--	--	na	5.4E+03	--	--	na	5.4E+03
1,3-Dichlorobenzene	0	--	--	na	9.6E+02	--	--	na	4.0E+04	--	--	na	9.6E+01	--	--	na	4.0E+03	--	--	na	4.0E+03
1,4-Dichlorobenzene	0	--	--	na	1.9E+02	--	--	na	7.9E+03	--	--	na	1.9E+01	--	--	na	7.9E+02	--	--	na	7.9E+02
3,3-Dichlorobenzidine[C]	0	--	--	na	2.8E-01	--	--	na	1.4E+01	--	--	na	2.8E-02	--	--	na	1.4E+00	--	--	na	1.4E+00
Dichlorobromomethane[C]	0	--	--	na	1.7E+02	--	--	na	8.8E+03	--	--	na	1.7E+01	--	--	na	8.8E+02	--	--	na	8.8E+02
1,2-Dichloroethane[C]	0	--	--	na	3.7E+02	--	--	na	1.9E+04	--	--	na	3.7E+01	--	--	na	1.9E+03	--	--	na	1.9E+03
1,1-Dichloroethylene	0	--	--	na	7.1E+03	--	--	na	2.9E+05	--	--	na	7.1E+02	--	--	na	2.9E+04	--	--	na	2.9E+04
1,2-trans-dichloroethylene	0	--	--	na	1.0E+04	--	--	na	4.2E+05	--	--	na	1.0E+03	--	--	na	4.2E+04	--	--	na	4.2E+04
2,4-Dichlorophenol	0	--	--	na	2.9E+02	--	--	na	1.2E+04	--	--	na	2.9E+01	--	--	na	1.2E+03	--	--	na	1.2E+03
2,4-Dichlorophenoxy acetic acid (2,4-D)	0	--	--	na	--	--	--	na	--	--	--	na	--	--	--	na	--	--	--	na	--
1,2-Dichloropropane[C]	0	--	--	na	1.5E+02	--	--	na	7.7E+03	--	--	na	1.5E+01	--	--	na	7.7E+02	--	--	na	7.7E+02
1,3-Dichloropropene[C]	0	--	--	na	2.1E+02	--	--	na	1.1E+04	--	--	na	2.1E+01	--	--	na	1.1E+03	--	--	na	1.1E+03
Dieldrin[C]	0	2.4E-01	5.6E-02	na	5.4E-04	2.8E-01	2.4E-01	na	2.8E-02	6.0E-02	1.4E-02	na	5.4E-05	2.3E-01	5.9E-02	na	2.8E-03	2.3E-01	5.9E-02	na	2.8E-03
Diethyl Phthalate	0	--	--	na	4.4E+04	--	--	na	1.8E+06	--	--	na	4.4E+03	--	--	na	1.8E+05	--	--	na	1.8E+05
2,4-Dimethylphenol	0	--	--	na	8.5E+02	--	--	na	3.5E+04	--	--	na	8.5E+01	--	--	na	3.5E+03	--	--	na	3.5E+03
Dimethyl Phthalate	0	--	--	na	1.1E+06	--	--	na	4.6E+07	--	--	na	1.1E+05	--	--	na	4.6E+06	--	--	na	4.6E+06
Di-n-Butyl Phthalate	0	--	--	na	4.5E+03	--	--	na	1.9E+05	--	--	na	4.5E+02	--	--	na	1.9E+04	--	--	na	1.9E+04
2,4 Dinitrophenol	0	--	--	na	5.3E+03	--	--	na	2.2E+05	--	--	na	5.3E+02	--	--	na	2.2E+04	--	--	na	2.2E+04
2-Methyl-4,6-Dinitrophenol	0	--	--	na	2.8E+02	--	--	na	1.2E+04	--	--	na	2.8E+01	--	--	na	1.2E+03	--	--	na	1.2E+03
2,4-Dinitrotoluene[C]	0	--	--	na	3.4E+01	--	--	na	1.8E+03	--	--	na	3.4E+00	--	--	na	1.8E+02	--	--	na	1.8E+02
Dioxin 2,3,7,8-tetrachlorodibenzo-p-dioxin	0	--	--	na	5.1E-08	--	--	na	2.1E-06	--	--	na	5.1E-09	--	--	na	2.1E-07	--	--	na	2.1E-07
1,2-Diphenylhydrazine[C]	0	--	--	na	2.0E+00	--	--	na	1.0E+02	--	--	na	2.0E-01	--	--	na	1.0E+01	--	--	na	1.0E+01
Alpha-Endosulfan	0	2.2E-01	5.6E-02	na	8.9E+01	2.6E-01	2.4E-01	na	3.7E+03	5.5E-02	1.4E-02	na	8.9E+00	2.1E-01	5.9E-02	na	3.7E+02	2.1E-01	5.9E-02	na	3.7E+02
Beta-Endosulfan	0	2.2E-01	5.6E-02	na	8.9E+01	2.6E-01	2.4E-01	na	3.7E+03	5.5E-02	1.4E-02	na	8.9E+00	2.1E-01	5.9E-02	na	3.7E+02	2.1E-01	5.9E-02	na	3.7E+02
Alpha + Beta Endosulfan	0	2.2E-01	5.6E-02	--	--	2.6E-01	2.4E-01	--	--	5.5E-02	1.4E-02	--	--	2.1E-01	5.9E-02	--	--	2.1E-01	5.9E-02	--	--
Endosulfan Sulfate	0	--	--	na	8.9E+01	--	--	na	3.7E+03	--	--	na	8.9E+00	--	--	na	3.7E+02	--	--	na	3.7E+02
Endrin	0	8.6E-02	3.6E-02	na	6.0E-02	1.0E-01	1.5E-01	na	2.5E+00	2.2E-02	9.0E-03	na	6.0E-03	8.2E-02	3.8E-02	na	2.5E-01	8.2E-02	3.8E-02	na	2.5E-01
Endrin Aldehyde	0	--	--	na	3.0E-01	--	--	na	1.2E+01	--	--	na	3.0E-02	--	--	na	1.2E+00	--	--	na	1.2E+00

Parameter	Background	Water Quality Criteria				Wasteload Allocations				Antidegradation Baseline				Antidegradation Allocations				Most Limiting Allocations			
(ug/l unless noted)	Conc.	Acute	Chronic	HH (PWS)	HH	Acute	Chronic	HH (PWS)	HH	Acute	Chronic	HH (PWS)	HH	Acute	Chronic	HH (PWS)	HH	Acute	Chronic	HH (PWS)	HH
Ethylbenzene	0	--	--	na	2.1E+03	--	--	na	8.7E+04	--	--	na	2.1E+02	--	--	na	8.7E+03	--	--	na	8.7E+03
Fluoranthene	0	--	--	na	1.4E+02	--	--	na	5.8E+03	--	--	na	1.4E+01	--	--	na	5.8E+02	--	--	na	5.8E+02
Fluorene	0	--	--	na	5.3E+03	--	--	na	2.2E+05	--	--	na	5.3E+02	--	--	na	2.2E+04	--	--	na	2.2E+04
Foaming Agents	0	--	--	na	--	--	--	na	--	--	--	na	--	--	--	na	--	--	--	na	--
Guthion	0	--	1.0E-02	na	--	--	4.2E-02	na	--	--	2.5E-03	na	--	--	1.1E-02	na	--	--	1.1E-02	na	--
Heptachlor [C]	0	5.2E-01	3.8E-03	na	7.9E-04	6.0E-01	1.6E-02	na	4.1E-02	1.3E-01	9.5E-04	na	7.9E-05	4.9E-01	4.0E-03	na	4.1E-03	4.9E-01	4.0E-03	na	4.1E-03
Heptachlor Epoxide[C]	0	5.2E-01	3.8E-03	na	3.9E-04	6.0E-01	1.6E-02	na	2.0E-02	1.3E-01	9.5E-04	na	3.9E-05	4.9E-01	4.0E-03	na	2.0E-03	4.9E-01	4.0E-03	na	2.0E-03
Hexachlorobenzene[C]	0	--	--	na	2.9E-03	--	--	na	1.5E-01	--	--	na	2.9E-04	--	--	na	1.5E-02	--	--	na	1.5E-02
Hexachlorobutadiene[C]	0	--	--	na	1.8E+02	--	--	na	9.3E+03	--	--	na	1.8E+01	--	--	na	9.3E+02	--	--	na	9.3E+02
Hexachlorocyclohexane Alpha-BHC[C]	0	--	--	na	4.9E-02	--	--	na	2.5E+00	--	--	na	4.9E-03	--	--	na	2.5E-01	--	--	na	2.5E-01
Hexachlorocyclohexane Beta-BHC[C]	0	--	--	na	1.7E-01	--	--	na	8.8E+00	--	--	na	1.7E-02	--	--	na	8.8E-01	--	--	na	8.8E-01
Hexachlorocyclohexane Gamma-BHC[C] (Lindane)	0	9.5E-01	na	na	1.8E+00	1.1E+00	--	na	9.3E+01	2.4E-01	--	na	1.8E-01	9.0E-01	--	na	9.3E+00	9.0E-01	--	na	9.3E+00
Hexachlorocyclopentadiene	0	--	--	na	1.1E+03	--	--	na	4.6E+04	--	--	na	1.1E+02	--	--	na	4.6E+03	--	--	na	4.6E+03
Hexachloroethane[C]	0	--	--	na	3.3E+01	--	--	na	1.7E+03	--	--	na	3.3E+00	--	--	na	1.7E+02	--	--	na	1.7E+02
Hydrogen Sulfide	0	--	2.0E+00	na	--	--	8.4E+00	na	--	--	5.0E-01	na	--	--	2.1E+00	na	--	--	2.1E+00	na	--
Indeno (1,2,3-cd) pyrene [C]	0	--	--	na	1.8E-01	--	--	na	9.3E+00	--	--	na	1.8E-02	--	--	na	9.3E-01	--	--	na	9.3E-01
Iron	0	--	--	na	--	--	--	na	--	--	--	na	--	--	--	na	--	--	--	na	--
Isophorone[C]	0	--	--	na	9.6E+03	--	--	na	4.9E+05	--	--	na	9.6E+02	--	--	na	4.9E+04	--	--	na	4.9E+04
Kepone	0	--	0.0E+00	na	--	--	0.0E+00	na	--	--	0.0E+00	na	--	--	0.0E+00	na	--	--	0.0E+00	na	--
Lead	0	5.3E+02	1.5E+01	na	--	6.2E+02	6.3E+01	na	--	3.6E+01	3.7E+00	na	--	1.4E+02	1.6E+01	na	--	1.4E+02	1.6E+01	na	--
Malathion	0	--	1.0E-01	na	--	--	4.2E-01	na	--	--	2.5E-02	na	--	--	1.1E-01	na	--	--	1.1E-01	na	--
Manganese	0	--	--	na	--	--	--	na	--	--	--	na	--	--	--	na	--	--	--	na	--
Mercury	0	1.4E+00	7.7E-01	--	--	1.6E+00	3.2E+00	--	--	3.5E-01	1.9E-01	--	--	1.3E+00	8.1E-01	--	--	1.3E+00	8.1E-01	--	--
Methyl Bromide	0	--	--	na	1.5E+03	--	--	na	6.2E+04	--	--	na	1.5E+02	--	--	na	6.2E+03	--	--	na	6.2E+03
Methylene Chloride [C]	0	--	--	na	5.9E+03	--	--	na	3.0E+05	--	--	na	5.9E+02	--	--	na	3.0E+04	--	--	na	3.0E+04
Methoxychlor	0	--	3.0E-02	na	--	--	1.3E-01	na	--	--	7.5E-03	na	--	--	3.2E-02	na	--	--	3.2E-02	na	--
Mirex	0	--	0.0E+00	na	--	--	0.0E+00	na	--	--	0.0E+00	na	--	--	0.0E+00	na	--	--	0.0E+00	na	--
Nickel	0	4.9E+02	2.2E+01	na	4.6E+03	5.7E+02	9.1E+01	na	1.9E+05	5.2E+01	5.4E+00	na	4.6E+02	2.0E+02	2.3E+01	na	1.9E+04	2.0E+02	2.3E+01	na	1.9E+04
Nitrate (as N)	0	--	--	na	--	--	--	na	--	--	--	na	--	--	--	na	--	--	--	na	--
Nitrobenzene	0	--	--	na	6.9E+02	--	--	na	2.9E+04	--	--	na	6.9E+01	--	--	na	2.9E+03	--	--	na	2.9E+03
N-Nitrosodimethylamine[C]	0	--	--	na	3.0E+01	--	--	na	1.5E+03	--	--	na	3.0E+00	--	--	na	1.5E+02	--	--	na	1.5E+02
N-Nitrosodiphenylamine[C]	0	--	--	na	6.0E+01	--	--	na	3.1E+03	--	--	na	6.0E+00	--	--	na	3.1E+02	--	--	na	3.1E+02
N-Nitrosodi-n-propylamine[C]	0	--	--	na	5.1E+00	--	--	na	2.6E+02	--	--	na	5.1E-01	--	--	na	2.6E+01	--	--	na	2.6E+01
Nonylphenol	0	2.8E+01	6.6E+00	--	--	3.3E+01	2.8E+01	na	--	7.0E+00	1.7E+00	--	--	2.7E+01	6.9E+00	--	--	2.7E+01	6.9E+00	na	--
Parathion	0	6.5E-02	1.3E-02	na	--	7.5E-02	5.5E-02	na	--	1.6E-02	3.3E-03	na	--	6.2E-02	1.4E-02	na	--	6.2E-02	1.4E-02	na	--
PCB Total[C]	0	--	1.4E-02	na	6.4E-04	--	5.9E-02	na	3.3E-02	--	3.5E-03	na	6.4E-05	--	1.5E-02	na	3.3E-03	--	1.5E-02	na	3.3E-03
Pentachlorophenol [C]	0	7.7E-03	5.9E-03	na	3.0E+01	8.9E-03	2.5E-02	na	1.5E+03	1.9E-03	1.5E-03	na	3.0E+00	7.3E-03	6.2E-03	na	1.5E+02	7.3E-03	6.2E-03	na	1.5E+02
Phenol	0	--	--	na	8.6E+05	--	--	na	3.6E+07	--	--	na	8.6E+04	--	--	na	3.6E+06	--	--	na	3.6E+06
Pyrene	0	--	--	na	4.0E+03	--	--	na	1.7E+05	--	--	na	4.0E+02	--	--	na	1.7E+04	--	--	na	1.7E+04
Radionuclides	0	--	--	na	--	--	--	na	--	--	--	na	--	--	--	na	--	--	--	na	--
Gross Alpha Activity (pCi/L)	0	--	--	na	--	--	--	na	--	--	--	na	--	--	--	na	--	--	--	na	--
Beta and Photon Activity (mrem/yr)	0	--	--	na	--	--	--	na	--	--	--	na	--	--	--	na	--	--	--	na	--
Radium 226 + 228 (pCi/L)	0	--	--	na	--	--	--	na	--	--	--	na	--	--	--	na	--	--	--	na	--
Uranium (ug/l)	0	--	--	na	--	--	--	na	--	--	--	na	--	--	--	na	--	--	--	na	--

Parameter	Background	Water Quality Criteria				Wasteload Allocations				Antidegradation Baseline				Antidegradation Allocations				**Most Limiting Allocations**			
(ug/l unless noted)	Conc.	Acute	Chronic	HH (PWS)	HH	Acute	Chronic	HH (PWS)	HH	Acute	Chronic	HH (PWS)	HH	Acute	Chronic	HH (PWS)	HH	**Acute**	**Chronic**	**HH (PWS)**	**HH**
Selenium, Total Recoverable	0	2.0E+01	5.0E+00	na	4.2E+03	2.3E+01	2.1E+01	na	1.7E+05	5.0E+00	1.3E+00	na	4.2E+02	1.9E+01	5.3E+00	na	1.7E+04	**1.9E+01**	**5.3E+00**	**na**	**1.7E+04**
Silver	0	2.6E+01	--	na	--	3.0E+01	--	na	--	1.1E+00	--	na	--	4.3E+00	--	na	--	**4.3E+00**	--	**na**	--
Sulfate	0	--	--	na	--	--	--	na	--	--	--	na	--	--	--	na	--	--	--	**na**	--
1,1,2,2-Tetrachloroethane[C]	0	--	--	na	4.0E+01	--	--	na	2.1E+03	--	--	na	4.0E+00	--	--	na	2.1E+02	--	--	**na**	**2.1E+02**
Tetrachloroethylene[C]	0	--	--	na	3.3E+01	--	--	na	1.7E+03	--	--	na	3.3E+00	--	--	na	1.7E+02	--	--	**na**	**1.7E+02**
Thallium	0	--	--	na	4.7E-01	--	--	na	2.0E+01	--	--	na	4.7E-02	--	--	na	2.0E+00	--	--	**na**	**2.0E+00**
Toluene	0	--	--	na	6.0E+03	--	--	na	2.5E+05	--	--	na	6.0E+02	--	--	na	2.5E+04	--	--	**na**	**2.5E+04**
Total dissolved solids	0	--	--	na	--	--	--	na	--	--	--	na	--	--	--	na	--	--	--	**na**	--
Toxaphene [C]	0	7.3E-01	2.0E-04	na	2.8E-03	8.5E-01	8.4E-04	na	1.4E-01	1.8E-01	5.0E-05	na	2.8E-04	6.9E-01	2.1E-04	na	1.4E-02	**6.9E-01**	**2.1E-04**	**na**	**1.4E-02**
Tributyltin	0	4.6E-01	7.2E-02	na	--	5.3E-01	3.0E-01	na	--	1.2E-01	1.8E-02	na	--	4.4E-01	7.6E-02	na	--	**4.4E-01**	**7.6E-02**	**na**	--
1,2,4-Trichlorobenzene	0	--	--	na	7.0E+01	--	--	na	2.9E+03	--	--	na	7.0E+00	--	--	na	2.9E+02	--	--	**na**	**2.9E+02**
1,1,2-Trichloroethane[C]	0	--	--	na	1.6E+02	--	--	na	8.2E+03	--	--	na	1.6E+01	--	--	na	8.2E+02	--	--	**na**	**8.2E+02**
Trichloroethylene [C]	0	--	--	na	3.0E+02	--	--	na	1.5E+04	--	--	na	3.0E+01	--	--	na	1.5E+03	--	--	**na**	**1.5E+03**
2,4,6-Trichlorophenol [C]	0	--	--	na	2.4E+01	--	--	na	1.2E+03	--	--	na	2.4E+00	--	--	na	1.2E+02	--	--	**na**	**1.2E+02**
2-(2,4,5-Trichlorophenoxy) propionic acid (Silvex)	0	--	--	na	--	--	--	na	--	--	--	na	--	--	--	na	--	--	--	**na**	--
Vinyl Chloride[C]	0	--	--	na	2.4E+01	--	--	na	1.2E+03	--	--	na	2.4E+00	--	--	na	1.2E+02	--	--	**na**	**1.2E+02**
Zinc	0	3.2E+02	1.3E+02	na	2.6E+04	3.7E+02	5.3E+02	na	1.1E+06	3.3E+01	3.2E+01	na	2.6E+03	1.3E+02	1.3E+02	na	1.1E+05	**1.3E+02**	**1.3E+02**	**na**	**1.1E+05**

Notes:

1. All concentrations expressed as micrograms/liter (ug/l), unless noted otherwise
2. Discharge flow is highest monthly average or Form 2C maximum for Industries and design flow for Municipals
3. Metals measured as Dissolved, unless specified otherwise
4. "C" indicates a carcinogenic parameter
5. Regular WLAs are mass balances (minus background concentration) using the % of stream flow entered above under Mixing Information. Antidegradation WLAs are based upon a complete mix.
6. Antideg. Baseline = (0.25(WQC - background conc.) + background conc.) for acute and chronic
   = (0.1(WQC - background conc.) + background conc.) for human health
7. WLAs established at the following stream flows: 1Q10 for Acute, 30Q10 for Chronic Ammonia, 7Q10 for Other Chronic, 30Q5 for Non-carcinogens and Harmonic Mean for Carcinogens. To apply mixing ratios from a model set the stream flow equal to (mixing ratio - 1), effluent flow equal to 1 and 100% mix.

Metal	Target Value (SSTV)
Antimony	2.7E+03
Arsenic	9.5E+01
Barium	na
Cadmium	7.6E-01
Chromium III	5.0E+01
Chromium VI	6.1E+00
Copper	5.9E+00
Iron	na
Lead	9.4E+00
Manganese	na
Mercury	4.9E-01
Nickel	1.4E+01
Selenium	3.2E+00
Silver	1.7E+00
Zinc	5.1E+01

Note: do not use QL's lower than the minimum QL's provided in agency guidance

Mixing Zone Predictions for Remington WWTP (Annual)

Effluent Flow = 2.0 MGD
Stream 7Q10 = 6.4 MGD
Stream 30Q10 = 12 MGD
Stream 1Q10 = 5.6 MGD
Stream slope = 0.001 ft/ft
Stream width = 75 ft
Bottom scale = 1
Channel scale = 1

Mixing Zone Predictions @ 7Q10

Depth = .3635 ft
Length = 27284.27 ft
Velocity = .4769 ft/sec
Residence Time = .6621 days

Recommendation:

A complete mix assumption is appropriate for this situation and the entire 7Q10 may be used.

Mixing Zone Predictions @ 30Q10

Depth = .4944 ft
Length = 21070.55 ft
Velocity = .5842 ft/sec
Residence Time = .4174 days

Recommendation:

A complete mix assumption is appropriate for this situation and the entire 30Q10 may be used.

Mixing Zone Predictions @ 1Q10

Depth = .3423 ft
Length = 28699.95 ft
Velocity = .4583 ft/sec
Residence Time = 17.3948 hours

Recommendation:

A complete mix assumption is appropriate for this situation providing no more than 5.75% of the 1Q10 is used.

Mixing Zone Predictions for Remington WWTP (Wet)

Effluent Flow = 2.0 MGD
Stream 7Q10 = 6.4 MGD
Stream 30Q10 = 89 MGD
Stream 1Q10 = 5.6 MGD
Stream slope = .001 ft/ft
Stream width = 75 ft
Bottom scale = 1
Channel scale = 1

Mixing Zone Predictions @ 7Q10

Depth = .3635 ft
Length = 27284.27 ft
Velocity = .4769 ft/sec
Residence Time = .6621 days

Recommendation:

A complete mix assumption is appropriate for this situation and the entire 7Q10 may be used.

Mixing Zone Predictions @ 30Q10

Depth = 1.5369 ft
Length = 8041.23 ft
Velocity = 1.2219 ft/sec
Residence Time = .0762 days

Recommendation:

A complete mix assumption is appropriate for this situation and the entire 30Q10 may be used.

Mixing Zone Predictions @ 1Q10

Depth = .3423 ft
Length = 28699.95 ft
Velocity = .4583 ft/sec
Residence Time = 17.3948 hours

Recommendation:

A complete mix assumption is appropriate for this situation providing no more than 5.75% of the 1Q10 is used.

Virginia DEQ Mixing Zone Analysis Version 2.1

FRESHWATER
WATER QUALITY CRITERIA / WASTELOAD ALLOCATION ANALYSIS

Facility Name: Remington WWTP - 2.5 MGD Permit No.: VA0076805

Receiving Stream: Rappahannock River Version: OWP Guidance Memo 00-2011 (8/24/00)

Stream Information

Mean Hardness (as CaCO3) =	25.5	mg/L
90% Temperature (Annual) =	26.2	deg C
90% Temperature (Wet season) =	13.9	deg C
90% Maximum pH =	7.2	SU
10% Maximum pH =		SU
Tier Designation (1 or 2) =	2	
Public Water Supply (PWS) Y/N? =	n	
Trout Present Y/N? =	n	
Early Life Stages Present Y/N? =	y	

Stream Flows

1Q10 (Annual) =	5.6	MGD
7Q10 (Annual) =	6.4	MGD
30Q10 (Annual) =	12	MGD
1Q10 (Wet season) =	52	MGD
30Q10 (Wet season)	89	MGD
30Q5 =	81	MGD
Harmonic Mean =	101	MGD

Mixing Information

Annual - 1Q10 Mix =	6.09	%
- 7Q10 Mix =	100	%
- 30Q10 Mix =	100	%
Wet Season - 1Q10 Mix =	35.7	%
- 30Q10 Mix =	100	%

Effluent Information

Mean Hardness (as CaCO3) =	372	mg/L
90% Temp (Annual) =	25	deg C
90% Temp (Wet season) =	25	deg C
90% Maximum pH =	8.3	SU
10% Maximum pH =		SU
Discharge Flow =	2.5	MGD

Parameter	Background	Water Quality Criteria				Wasteload Allocations				Antidegradation Baseline				Antidegradation Allocations				Most Limiting Allocations			
(ug/l unless noted)	Conc.	Acute	Chronic	HH (PWS)	HH	Acute	Chronic	HH (PWS)	HH	Acute	Chronic	HH (PWS)	HH	Acute	Chronic	HH (PWS)	HH	Acute	Chronic	HH (PWS)	HH
Acenapthene	0	--	--	na	9.9E+02	--	--	na	3.3E+04	--	--	na	9.9E+01	--	--	na	3.3E+03	--	--	na	3.3E+03
Acrolein	0	--	--	na	9.3E+00	--	--	na	3.1E+02	--	--	na	9.3E-01	--	--	na	3.1E+01	--	--	na	3.1E+01
Acrylonitrile[c]	0	--	--	na	2.5E+00	--	--	na	1.0E+02	--	--	na	2.5E-01	--	--	na	1.0E+01	--	--	na	1.0E+01
Aldrin [c]	0	3.0E+00	--	na	5.0E-04	3.4E+00	--	na	2.1E-02	7.5E-01	--	na	5.0E-05	2.4E+00	--	na	2.1E-03	2.4E+00	--	na	2.1E-03
Ammonia-N (mg/l) (Yearly)	0	9.74E+00	2.46E+00	na	--	1.11E+01	1.43E+01	na	--	6.18E+00	6.15E-01	na	--	2.00E+01	3.57E+00	na	--	1.11E+01	3.57E+00	na	--
Ammonia-N (mg/l) (High Flow)	0	2.79E+01	5.36E+00	na	--	2.35E+02	1.96E+02	na	--	7.23E+00	1.34E+00	na	--	1.58E+02	4.90E+01	na	--	1.58E+02	4.90E+01	na	--
Anthracene	0	--	--	na	4.0E+04	--	--	na	1.3E+06	--	--	na	4.0E+03	--	--	na	1.3E+05	--	--	na	1.3E+06
Antimony	0	--	--	na	6.4E+02	--	--	na	2.1E+04	--	--	na	6.4E+01	--	--	na	2.1E+03	--	--	na	2.1E+03
Arsenic	0	3.4E+02	1.5E+02	na	--	3.9E+02	5.3E+02	na	--	8.5E+01	3.8E+01	na	--	2.8E+02	1.3E+02	na	--	2.8E+02	1.3E+02	na	--
Barium	0	--	--	na	--	--	--	na	--	--	--	na	--	--	--	na	--	--	--	na	--
Benzene [c]	0	--	--	na	5.1E+02	--	--	na	2.1E+04	--	--	na	5.1E+01	--	--	na	2.1E+03	--	--	na	2.1E+03
Benzidine[c]	0	--	--	na	2.0E-03	--	--	na	8.3E-02	--	--	na	2.0E-04	--	--	na	8.3E-03	--	--	na	8.3E-03
Benzo (a) anthracene [c]	0	--	--	na	1.8E-01	--	--	na	7.5E+00	--	--	na	1.8E-02	--	--	na	7.5E-01	--	--	na	7.5E-01
Benzo (b) fluoranthene [c]	0	--	--	na	1.8E-01	--	--	na	7.5E+00	--	--	na	1.8E-02	--	--	na	7.5E-01	--	--	na	7.5E-01
Benzo (k) fluoranthene [c]	0	--	--	na	1.8E-01	--	--	na	7.5E+00	--	--	na	1.8E-02	--	--	na	7.5E-01	--	--	na	7.5E-01
Benzo (a) pyrene [c]	0	--	--	na	1.8E-01	--	--	na	7.5E+00	--	--	na	1.8E-02	--	--	na	7.5E-01	--	--	na	7.5E-01
Bis2-Chloroethyl Ether [c]	0	--	--	na	5.3E+00	--	--	na	2.2E+02	--	--	na	5.3E-01	--	--	na	2.2E+01	--	--	na	2.2E+01
Bis2-Chloroisopropyl Ether	0	--	--	na	6.5E+04	--	--	na	2.2E+06	--	--	na	6.5E+03	--	--	na	2.2E+05	--	--	na	2.2E+05
Bis 2-Ethylhexyl Phthalate [c]	0	--	--	na	2.2E+01	--	--	na	9.1E+02	--	--	na	2.2E+00	--	--	na	9.1E+01	--	--	na	9.1E+01
Bromoform [c]	0	--	--	na	1.4E+03	--	--	na	5.8E+04	--	--	na	1.4E+02	--	--	na	5.8E+03	--	--	na	5.8E+03
Butylbenzylphthalate	0	--	--	na	1.9E+03	--	--	na	6.3E+04	--	--	na	1.9E+02	--	--	na	6.3E+03	--	--	na	6.3E+03
Cadmium	0	1.5E+01	1.3E+00	na	--	1.7E+01	4.7E+00	na	--	1.3E+00	3.3E-01	na	--	4.4E+00	1.2E+00	na	--	4.4E+00	1.2E+00	na	--
Carbon Tetrachloride [c]	0	--	--	na	1.6E+01	--	--	na	6.6E+02	--	--	na	1.6E+00	--	--	na	6.6E+01	--	--	na	6.6E+01
Chlordane [c]	0	2.4E+00	4.3E-03	na	8.1E-03	2.7E+00	1.5E-02	na	3.4E-01	6.0E-01	1.1E-03	na	8.1E-04	1.9E+00	3.8E-03	na	3.4E-02	1.9E+00	3.8E-03	na	3.4E-02
Chloride	0	8.6E+05	2.3E+05	na	--	9.8E+05	8.2E+05	na	--	2.2E+05	5.8E+04	na	--	7.0E+05	2.0E+05	na	--	7.0E+05	2.0E+05	na	--
TRC	0	1.9E+01	1.1E+01	na	--	2.2E+01	3.9E+01	na	--	4.8E+00	2.8E+00	na	--	1.5E+01	9.8E+00	na	--	1.5E+01	9.8E+00	na	--
Chlorobenzene	0	--	--	na	1.6E+03	--	--	na	5.3E+04	--	--	na	1.6E+02	--	--	na	5.3E+03	--	--	na	5.3E+03

Parameter (ug/l unless noted)	Background Conc.	Water Quality Criteria				Wasteload Allocations				Antidegradation Baseline				Antidegradation Allocations				Most Limiting Allocations			
		Acute	Chronic	HH (PWS)	HH	Acute	Chronic	HH (PWS)	HH	Acute	Chronic	HH (PWS)	HH	Acute	Chronic	HH (PWS)	HH	Acute	Chronic	HH (PWS)	HH
Chlorodibromomethane[c]	0	--	--	na	1.3E+02	--	--	na	5.4E+03	--	--	na	1.3E+01	--	--	na	5.4E+02	--	--	na	5.4E+02
Chloroform	0	--	--	na	1.1E+04	--	--	na	3.7E+05	--	--	na	1.1E+03	--	--	na	3.7E+04	--	--	na	3.7E+04
2-Chloronaphthalene	0	--	--	na	1.6E+03	--	--	na	5.3E+04	--	--	na	1.6E+02	--	--	na	5.3E+03	--	--	na	5.3E+03
2-Chlorophenol	0	--	--	na	1.5E+02	--	--	na	5.0E+03	--	--	na	1.5E+01	--	--	na	5.0E+02	--	--	na	5.0E+02
Chlorpyrifos	0	8.3E-02	4.1E-02	na	--	9.4E-02	1.5E-01	na	--	2.1E-02	1.0E-02	na	--	6.7E-02	3.6E-02	na	--	6.7E-02	3.6E-02	na	--
Chromium III	0	1.5E+03	8.8E+01	na	--	1.7E+03	3.1E+02	na	--	1.8E+02	2.2E+01	na	--	5.8E+02	7.8E+01	na	--	5.8E+02	7.8E+01	na	--
Chromium VI	0	1.6E+01	1.1E+01	na	--	1.8E+01	3.9E+01	na	--	4.0E+00	2.8E+00	na	--	1.3E+01	9.8E+00	na	--	1.3E+01	9.8E+00	na	--
Chromium, Total	0	--	--	1.0E+02	--	--	--	na	--	--	--	1.0E+01	--	--	--	3.3E+02	--	--	--	na	--
Chrysene[c]	0	--	--	na	1.8E-02	--	--	na	7.5E-01	--	--	na	1.8E-03	--	--	na	7.5E-02	--	--	na	7.5E-02
Copper	0	4.1E+01	1.1E+01	na	--	4.7E+01	3.8E+01	na	--	4.4E+00	2.7E+00	na	--	1.4E+01	9.5E+00	na	--	1.4E+01	9.5E+00	na	--
Cyanide, Free	0	2.2E+01	5.2E+00	na	1.6E+04	2.5E+01	1.9E+01	na	5.3E+05	5.5E+00	1.3E+00	na	1.6E+03	1.8E+01	4.6E+00	na	5.3E+04	1.8E+01	4.6E+00	na	5.3E+04
DDD[c]	0	--	--	na	3.1E-03	--	--	na	1.3E-01	--	--	na	3.1E-04	--	--	na	1.3E-02	--	--	na	1.3E-02
DDE[c]	0	--	--	na	2.2E-03	--	--	na	9.1E-02	--	--	na	2.2E-04	--	--	na	9.1E-03	--	--	na	9.1E-03
DDT[c]	0	1.1E+00	1.0E-03	na	2.2E-03	1.3E+00	3.6E-03	na	9.1E-02	2.8E-01	2.5E-04	na	2.2E-04	8.9E-01	8.9E-04	na	9.1E-03	8.9E-01	8.9E-04	na	9.1E-03
Demeton	0	--	1.0E-01	na	--	--	3.6E-01	na	--	--	2.5E-02	na	--	--	8.9E-02	na	--	--	8.9E-02	na	--
Diazinon	0	1.7E-01	1.7E-01	na	--	1.9E-01	6.1E-01	na	--	4.3E-02	4.3E-02	na	--	1.4E-01	1.5E-01	na	--	1.4E-01	1.5E-01	na	--
Dibenz(a,h)anthracene[c]	0	--	--	na	1.8E-01	--	--	na	7.5E+00	--	--	na	1.8E-02	--	--	na	7.5E-01	--	--	na	7.5E-01
1,2-Dichlorobenzene	0	--	--	na	1.3E+03	--	--	na	4.3E+04	--	--	na	1.3E+02	--	--	na	4.3E+03	--	--	na	4.3E+03
1,3-Dichlorobenzene	0	--	--	na	9.6E+02	--	--	na	3.2E+04	--	--	na	9.6E+01	--	--	na	3.2E+03	--	--	na	3.2E+03
1,4-Dichlorobenzene	0	--	--	na	1.9E+02	--	--	na	6.3E+03	--	--	na	1.9E+01	--	--	na	6.3E+02	--	--	na	6.3E+02
3,3-Dichlorobenzidine[c]	0	--	--	na	2.8E-01	--	--	na	1.2E+01	--	--	na	2.8E-02	--	--	na	1.2E+00	--	--	na	1.2E+00
Dichlorobromomethane[c]	0	--	--	na	1.7E+02	--	--	na	7.0E+03	--	--	na	1.7E+01	--	--	na	7.0E+02	--	--	na	7.0E+02
1,2-Dichloroethane[c]	0	--	--	na	3.7E+02	--	--	na	1.5E+04	--	--	na	3.7E+01	--	--	na	1.5E+03	--	--	na	1.5E+03
1,1-Dichloroethylene	0	--	--	na	7.1E+03	--	--	na	2.4E+05	--	--	na	7.1E+02	--	--	na	2.4E+04	--	--	na	2.4E+04
1,2-trans-dichloroethylene	0	--	--	na	1.0E+04	--	--	na	3.3E+05	--	--	na	1.0E+03	--	--	na	3.3E+04	--	--	na	3.3E+04
2,4-Dichlorophenol	0	--	--	na	2.9E+02	--	--	na	9.7E+03	--	--	na	2.9E+01	--	--	na	9.7E+02	--	--	na	9.7E+02
2,4-Dichlorophenoxy acetic acid (2,4-D)	0	--	--	na	--	--	--	na	--	--	--	na	--	--	--	na	--	--	--	na	--
1,2-Dichloropropane[c]	0	--	--	na	1.5E+02	--	--	na	6.2E+03	--	--	na	1.5E+01	--	--	na	6.2E+02	--	--	na	6.2E+02
1,3-Dichloropropene[c]	0	--	--	na	2.1E+02	--	--	na	8.7E+03	--	--	na	2.1E+01	--	--	na	8.7E+02	--	--	na	8.7E+02
Dieldrin[c]	0	2.4E-01	5.6E-02	na	5.4E-04	2.7E-01	2.0E-01	na	2.2E-02	6.0E-02	1.4E-02	na	5.4E-05	1.9E-01	5.0E-02	na	2.2E-03	1.9E-01	5.0E-02	na	2.2E-03
Diethyl Phthalate	0	--	--	na	4.4E+04	--	--	na	1.5E+06	--	--	na	4.4E+03	--	--	na	1.5E+05	--	--	na	1.5E+05
2,4-Dimethylphenol	0	--	--	na	8.5E+02	--	--	na	2.8E+04	--	--	na	8.5E+01	--	--	na	2.8E+03	--	--	na	2.8E+03
Dimethyl Phthalate	0	--	--	na	1.1E+06	--	--	na	3.7E+07	--	--	na	1.1E+05	--	--	na	3.7E+06	--	--	na	3.7E+06
Di-n-Butyl Phthalate	0	--	--	na	4.5E+03	--	--	na	1.5E+05	--	--	na	4.5E+02	--	--	na	1.5E+04	--	--	na	1.5E+04
2,4 Dinitrophenol	0	--	--	na	5.3E+03	--	--	na	1.8E+05	--	--	na	5.3E+02	--	--	na	1.8E+04	--	--	na	1.8E+04
2-Methyl-4,6-Dinitrophenol	0	--	--	na	2.8E+02	--	--	na	9.4E+03	--	--	na	2.8E+01	--	--	na	9.4E+02	--	--	na	9.4E+02
2,4-Dinitrotoluene[c]	0	--	--	na	3.4E+01	--	--	na	1.4E+03	--	--	na	3.4E+00	--	--	na	1.4E+02	--	--	na	1.4E+02
Dioxin 2,3,7,8-tetrachlorodibenzo-p-dioxin	0	--	--	na	5.1E-08	--	--	na	1.7E-06	--	--	na	5.1E-09	--	--	na	1.7E-07	--	--	na	1.7E-07
1,2-Diphenylhydrazine[c]	0	--	--	na	2.0E+00	--	--	na	8.3E+01	--	--	na	2.0E-01	--	--	na	8.3E+00	--	--	na	8.3E+00
Alpha-Endosulfan	0	2.2E-01	5.6E-02	na	8.9E+01	2.5E-01	2.0E-01	na	3.0E+03	5.5E-02	1.4E-02	na	8.9E+00	1.8E-01	5.0E-02	na	3.0E+02	1.8E-01	5.0E-02	na	3.0E+02
Beta-Endosulfan	0	2.2E-01	5.6E-02	na	8.9E+01	2.5E-01	2.0E-01	na	3.0E+03	5.5E-02	1.4E-02	na	8.9E+00	1.8E-01	5.0E-02	na	3.0E+02	1.8E-01	5.0E-02	na	3.0E+02
Alpha + Beta Endosulfan	0	2.2E-01	5.6E-02	--	--	2.5E-01	2.0E-01	--	--	5.5E-02	1.4E-02	--	--	1.8E-01	5.0E-02	--	--	1.8E-01	5.0E-02	--	--
Endosulfan Sulfate	0	--	--	na	8.9E+01	--	--	na	3.0E+03	--	--	na	8.9E+00	--	--	na	3.0E+02	--	--	na	3.0E+02
Endrin	0	8.6E-02	3.6E-02	na	6.0E-02	9.8E-02	1.3E-01	na	2.0E+00	2.2E-02	9.0E-03	na	6.0E-03	7.0E-02	3.2E-02	na	2.0E-01	7.0E-02	3.2E-02	na	2.0E-01
Endrin Aldehyde	0	--	--	na	3.0E-01	--	--	na	1.0E+01	--	--	na	3.0E-02	--	--	na	1.0E+00	--	--	na	1.0E+00

Parameter	Background	Water Quality Criteria				Wasteload Allocations				Antidegradation Baseline				Antidegradation Allocations				Most Limiting Allocations			
(ug/l unless noted)	Conc.	Acute	Chronic	HH (PWS)	HH	Acute	Chronic	HH (PWS)	HH	Acute	Chronic	HH (PWS)	HH	Acute	Chronic	HH (PWS)	HH	Acute	Chronic	HH (PWS)	HH
Ethylbenzene	0	--	--	na	2.1E+03	--	--	na	7.0E+04	--	--	na	2.1E+02	--	--	na	7.0E+03	--	--	na	**7.0E+03**
Fluoranthene	0	--	--	na	1.4E+02	--	--	na	4.7E+03	--	--	na	1.4E+01	--	--	na	4.7E+02	--	--	na	**4.7E+02**
Fluorene	0	--	--	na	5.3E+03	--	--	na	1.8E+05	--	--	na	5.3E+02	--	--	na	1.8E+04	--	--	na	**1.8E+04**
Foaming Agents	0	--	--	na	--	--	--	na	--	--	--	na	--	--	--	na	--	--	--	na	--
Guthion	0	--	1.0E-02	na	--	--	3.6E-02	na	--	--	2.5E-03	na	--	--	8.9E-03	na	--	--	**8.9E-03**	na	--
Heptachlor [c]	0	5.2E-01	3.8E-03	na	7.9E-04	5.9E-01	1.4E-02	na	3.3E-02	1.3E-01	9.5E-04	na	7.9E-05	4.2E-01	3.4E-03	na	3.3E-03	**4.2E-01**	**3.4E-03**	na	**3.3E-03**
Heptachlor Epoxide[c]	0	5.2E-01	3.8E-03	na	3.9E-04	5.9E-01	1.4E-02	na	1.6E-02	1.3E-01	9.5E-04	na	3.9E-05	4.2E-01	3.4E-03	na	1.6E-03	**4.2E-01**	**3.4E-03**	na	**1.6E-03**
Hexachlorobenzene[c]	0	--	--	na	2.9E-03	--	--	na	1.2E-01	--	--	na	2.9E-04	--	--	na	1.2E-02	--	--	na	**1.2E-02**
Hexachlorobutadiene[c]	0	--	--	na	1.8E+02	--	--	na	7.5E+03	--	--	na	1.8E+01	--	--	na	7.5E+02	--	--	na	**7.5E+02**
Hexachlorocyclohexane Alpha-BHC[c]	0	--	--	na	4.9E-02	--	--	na	2.0E+00	--	--	na	4.9E-03	--	--	na	2.0E-01	--	--	na	**2.0E-01**
Hexachlorocyclohexane Beta-BHC[c]	0	--	--	na	1.7E-01	--	--	na	7.0E+00	--	--	na	1.7E-02	--	--	na	7.0E-01	--	--	na	**7.0E-01**
Hexachlorocyclohexane Gamma-BHC[c] (Lindane)	0	9.5E-01	na	na	1.8E+00	1.1E+00	--	na	7.5E+01	2.4E-01	--	na	1.8E-01	7.7E-01	--	na	7.5E+00	**7.7E-01**	--	na	**7.5E+00**
Hexachlorocyclopentadiene	0	--	--	na	1.1E+03	--	--	na	3.7E+04	--	--	na	1.1E+02	--	--	na	3.7E+03	--	--	na	**3.7E+03**
Hexachloroethane[c]	0	--	--	na	3.3E+01	--	--	na	1.4E+03	--	--	na	3.3E+00	--	--	na	1.4E+02	--	--	na	**1.4E+02**
Hydrogen Sulfide	0	--	2.0E+00	na	--	--	7.1E+00	na	--	--	5.0E-01	na	--	--	1.8E+00	na	--	--	**1.8E+00**	na	--
Indeno (1,2,3-cd) pyrene [c]	0	--	--	na	1.8E-01	--	--	na	7.5E+00	--	--	na	1.8E-02	--	--	na	7.5E-01	--	--	na	**7.5E-01**
Iron	0	--	--	na	--	--	--	na	--	--	--	na	--	--	--	na	--	--	--	na	--
Isophorone[c]	0	--	--	na	9.6E+03	--	--	na	4.0E+05	--	--	na	9.6E+02	--	--	na	4.0E+04	--	--	na	**4.0E+04**
Kepone	0	--	0.0E+00	na	--	--	0.0E+00	na	--	--	0.0E+00	na	--	--	0.0E+00	na	--	--	**0.0E+00**	na	--
Lead	0	5.4E+02	1.8E+01	na	--	6.2E+02	6.2E+01	na	--	4.3E+01	4.4E+00	na	--	1.4E+02	1.6E+01	na	--	**1.4E+02**	**1.6E+01**	na	--
Malathion	0	--	1.0E-01	na	--	--	3.6E-01	na	--	--	2.5E-02	na	--	--	8.9E-02	na	--	--	**8.9E-02**	na	--
Manganese	0	--	--	na	--	--	--	na	--	--	--	na	--	--	--	na	--	--	--	na	--
Mercury	0	1.4E+00	7.7E-01	--	--	1.6E+00	2.7E+00	--	--	3.5E-01	1.9E-01	--	--	1.1E+00	6.9E-01	--	--	**1.1E+00**	**6.9E-01**	--	--
Methyl Bromide	0	--	--	na	1.5E+03	--	--	na	5.0E+04	--	--	na	1.5E+02	--	--	na	5.0E+03	--	--	na	**5.0E+03**
Methylene Chloride [c]	0	--	--	na	5.9E+03	--	--	na	2.4E+05	--	--	na	5.9E+02	--	--	na	2.4E+04	--	--	na	**2.4E+04**
Methoxychlor	0	--	3.0E-02	na	--	--	1.1E-01	na	--	--	7.5E-03	na	--	--	2.7E-02	na	--	--	**2.7E-02**	na	--
Mirex	0	--	0.0E+00	na	--	--	0.0E+00	na	--	--	0.0E+00	na	--	--	0.0E+00	na	--	--	**0.0E+00**	na	--
Nickel	0	5.0E+02	2.4E+01	na	4.6E+03	5.7E+02	8.6E+01	na	1.5E+05	5.8E+01	6.0E+00	na	4.6E+02	1.9E+02	2.1E+01	na	1.5E+04	**1.9E+02**	**2.1E+01**	na	**1.5E+04**
Nitrate (as N)	0	--	--	na	--	--	--	na	--	--	--	na	--	--	--	na	--	--	--	na	--
Nitrobenzene	0	--	--	na	6.9E+02	--	--	na	2.3E+04	--	--	na	6.9E+01	--	--	na	2.3E+03	--	--	na	**2.3E+03**
N-Nitrosodimethylamine[c]	0	--	--	na	3.0E+01	--	--	na	1.2E+03	--	--	na	3.0E+00	--	--	na	1.2E+02	--	--	na	**1.2E+02**
N-Nitrosodiphenylamine[c]	0	--	--	na	6.0E+01	--	--	na	2.5E+03	--	--	na	6.0E+00	--	--	na	2.5E+02	--	--	na	**2.5E+02**
N-Nitrosodi-n-propylamine[c]	0	--	--	na	5.1E+00	--	--	na	2.1E+02	--	--	na	5.1E-01	--	--	na	2.1E+01	--	--	na	**2.1E+01**
Nonylphenol	0	2.8E+01	6.6E+00	--	--	3.2E+01	2.3E+01	na	--	7.0E+00	1.7E+00	--	--	2.3E+01	5.9E+00	--	--	**2.3E+01**	**5.9E+00**	na	--
Parathion	0	6.5E-02	1.3E-02	na	--	7.4E-02	4.6E-02	na	--	1.6E-02	3.3E-03	na	--	5.3E-02	1.2E-02	na	--	**5.3E-02**	**1.2E-02**	na	--
PCB Total[c]	0	--	1.4E-02	na	6.4E-04	--	5.0E-02	na	2.6E-02	--	3.5E-03	na	6.4E-05	--	1.2E-02	na	2.6E-03	--	**1.2E-02**	na	**2.6E-03**
Pentachlorophenol [c]	0	7.7E-03	5.9E-03	na	3.0E+01	8.7E-03	2.1E-02	na	1.2E+03	1.9E-03	1.5E-03	na	3.0E+00	6.2E-03	5.2E-03	na	1.2E+02	**6.2E-03**	**5.2E-03**	na	**1.2E+02**
Phenol	0	--	--	na	8.6E+05	--	--	na	2.9E+07	--	--	na	8.6E+04	--	--	na	2.9E+06	--	--	na	**2.9E+06**
Pyrene	0	--	--	na	4.0E+03	--	--	na	1.3E+05	--	--	na	4.0E+02	--	--	na	1.3E+04	--	--	na	**1.3E+04**
Radionuclides	0	--	--	na	--	--	--	na	--	--	--	na	--	--	--	na	--	--	--	na	--
Gross Alpha Activity (pCi/L)	0	--	--	na	--	--	--	na	--	--	--	na	--	--	--	na	--	--	--	na	--
Beta and Photon Activity (mrem/yr)	0	--	--	na	--	--	--	na	--	--	--	na	--	--	--	na	--	--	--	na	--
Radium 226 + 228 (pCi/L)	0	--	--	na	--	--	--	na	--	--	--	na	--	--	--	na	--	--	--	na	--
Uranium (ug/l)	0	--	--	na	--	--	--	na	--	--	--	na	--	--	--	na	--	--	--	na	--

Parameter (ug/l unless noted)	Background Conc.	Water Quality Criteria				Wasteload Allocations				Antidegradation Baseline				Antidegradation Allocations				**Most Limiting Allocations**			
		Acute	Chronic	HH (PWS)	HH	Acute	Chronic	HH (PWS)	HH	Acute	Chronic	HH (PWS)	HH	Acute	Chronic	HH (PWS)	HH	**Acute**	**Chronic**	**HH (PWS)**	**HH**
Selenium, Total Recoverable	0	2.0E+01	5.0E+00	na	4.2E+03	2.3E+01	1.8E+01	na	1.4E+05	5.0E+00	1.3E+00	na	4.2E+02	1.6E+01	4.5E+00	na	1.4E+04	**1.6E+01**	**4.5E+00**	**na**	**1.4E+04**
Silver	0	2.7E+01	--	na	--	3.1E+01	--	na	--	1.4E+00	--	na	--	4.5E+00	--	na	--	**4.5E+00**	**--**	**na**	**--**
Sulfate	0	--	--	na	--	--	--	na	--	--	--	na	--	--	--	na	--	**--**	**--**	**na**	**--**
1,1,2,2-Tetrachloroethane[C]	0	--	--	na	4.0E+01	--	--	na	1.7E+03	--	--	na	4.0E+00	--	--	na	1.7E+02	**--**	**--**	**na**	**1.7E+02**
Tetrachloroethylene[C]	0	--	--	na	3.3E+01	--	--	na	1.4E+03	--	--	na	3.3E+00	--	--	na	1.4E+02	**--**	**--**	**na**	**1.4E+02**
Thallium	0	--	--	na	4.7E-01	--	--	na	1.6E+01	--	--	na	4.7E-02	--	--	na	1.6E+00	**--**	**--**	**na**	**1.6E+00**
Toluene	0	--	--	na	6.0E+03	--	--	na	2.0E+05	--	--	na	6.0E+02	--	--	na	2.0E+04	**--**	**--**	**na**	**2.0E+04**
Total dissolved solids	0	--	--	na	--	--	--	na	--	--	--	na	--	--	--	na	--	**--**	**--**	**na**	**--**
Toxaphene [C]	0	7.3E-01	2.0E-04	na	2.8E-03	8.3E-01	7.1E-04	na	1.2E-01	1.8E-01	5.0E-05	na	2.8E-04	5.9E-01	1.8E-04	na	1.2E-02	**5.9E-01**	**1.8E-04**	**na**	**1.2E-02**
Tributyltin	0	4.6E-01	7.2E-02	na	--	5.2E-01	2.6E-01	na	--	1.2E-01	1.8E-02	na	--	3.7E-01	6.4E-02	na	--	**3.7E-01**	**6.4E-02**	**na**	**--**
1,2,4-Trichlorobenzene	0	--	--	na	7.0E+01	--	--	na	2.3E+03	--	--	na	7.0E+00	--	--	na	2.3E+02	**--**	**--**	**na**	**2.3E+02**
1,1,2-Trichloroethane[C]	0	--	--	na	1.6E+02	--	--	na	6.6E+03	--	--	na	1.6E+01	--	--	na	6.6E+02	**--**	**--**	**na**	**6.6E+02**
Trichloroethylene [C]	0	--	--	na	3.0E+02	--	--	na	1.2E+04	--	--	na	3.0E+01	--	--	na	1.2E+03	**--**	**--**	**na**	**1.2E+03**
2,4,6-Trichlorophenol [C]	0	--	--	na	2.4E+01	--	--	na	9.9E+02	--	--	na	2.4E+00	--	--	na	9.9E+01	**--**	**--**	**na**	**9.9E+01**
2-(2,4,5-Trichlorophenoxy) propionic acid (Silvex)	0	--	--	na	--	--	--	na	--	--	--	na	--	--	--	na	--	**--**	**--**	**na**	**--**
Vinyl Chloride[C]	0	--	--	na	2.4E+01	--	--	na	9.9E+02	--	--	na	2.4E+00	--	--	na	9.9E+01	**--**	**--**	**na**	**9.9E+01**
Zinc	0	3.2E+02	1.4E+02	na	2.6E+04	3.7E+02	5.0E+02	na	8.7E+05	3.7E+01	3.5E+01	na	2.6E+03	1.2E+02	1.3E+02	na	8.7E+04	**1.2E+02**	**1.3E+02**	**na**	**8.7E+04**

Notes:

1. All concentrations expressed as micrograms/liter (ug/l), unless noted otherwise
2. Discharge flow is highest monthly average or Form 2C maximum for Industries and design flow for Municipals
3. Metals measured as Dissolved, unless specified otherwise
4. "C" indicates a carcinogenic parameter
5. Regular WLAs are mass balances (minus background concentration) using the % of stream flow entered above under Mixing Information. Antidegradation WLAs are based upon a complete mix.
6. Antideg. Baseline = (0.25(WQC - background conc.) + background conc.) for acute and chronic
   = (0.1(WQC - background conc.) + background conc.) for human health
7. WLAs established at the following stream flows: 1Q10 for Acute, 30Q10 for Chronic Ammonia, 7Q10 for Other Chronic, 30Q5 for Non-carcinogens and Harmonic Mean for Carcinogens. To apply mixing ratios from a model set the stream flow equal to (mixing ratio - 1), effluent flow equal to 1 and 100% mix.

Metal	Target Value (SSTV)
Antimony	2.1E+03
Arsenic	8.0E+01
Barium	na
Cadmium	7.1E-01
Chromium III	4.7E+01
Chromium VI	5.2E+00
Copper	5.7E+00
Iron	na
Lead	9.4E+00
Manganese	na
Mercury	4.1E-01
Nickel	1.3E+01
Selenium	2.7E+00
Silver	1.8E+00
Zinc	4.8E+01

Note: do not use QL's lower than the minimum QL's provided in agency guidance

Mixing Zone Predictions for Remington WWTP (Annual)

Effluent Flow = 2.5 MGD
Stream 7Q10 = 6.4 MGD
Stream 30Q10 = 12 MGD
Stream 1Q10 = 5.6 MGD
Stream slope = 0.001 ft/ft
Stream width = 75 ft
Bottom scale = 1
Channel scale = 1

Mixing Zone Predictions @ 7Q10

Depth = .3764 ft
Length = 26496.88 ft
Velocity = .488 ft/sec
Residence Time = .6284 days

Recommendation:

A complete mix assumption is appropriate for this situation and the entire 7Q10 may be used.

Mixing Zone Predictions @ 30Q10

Depth = .5052 ft
Length = 20688.64 ft
Velocity = .5924 ft/sec
Residence Time = .4042 days

Recommendation:

A complete mix assumption is appropriate for this situation and the entire 30Q10 may be used.

Mixing Zone Predictions @ 1Q10

Depth = .3556 ft
Length = 27790.16 ft
Velocity = .4701 ft/sec
Residence Time = 16.4218 hours

Recommendation:

A complete mix assumption is appropriate for this situation providing no more than 6.09% of the 1Q10 is used.

Mixing Zone Predictions for Remington WWTP (wet)

Effluent Flow = 2.5 MGD
Stream 7Q10 = 6.4 MGD
Stream 30Q10 = 89 MGD
Stream 1Q10 = 5.6 MGD
Stream slope = .001 ft/ft
Stream width = 75 ft
Bottom scale = 1
Channel scale = 1

Mixing Zone Predictions @ 7Q10

Depth = .3764 ft
Length = 26496.88 ft
Velocity = .488 ft/sec
Residence Time = .6284 days

Recommendation:

A complete mix assumption is appropriate for this situation and the entire 7Q10 may be used.

Mixing Zone Predictions @ 30Q10

Depth = 1.5422 ft
Length = 8017.13 ft
Velocity = 1.2246 ft/sec
Residence Time = .0758 days

Recommendation:

A complete mix assumption is appropriate for this situation and the entire 30Q10 may be used.

Mixing Zone Predictions @ 1Q10

Depth = .3556 ft
Length = 27790.16 ft
Velocity = .4701 ft/sec
Residence Time = 16.4218 hours

Recommendation:

A complete mix assumption is appropriate for this situation providing no more than 6.09% of the 1Q10 is used.

Virginia DEQ Mixing Zone Analysis Version 2.1

VA0076805 Remington WWTP - Ambient Data (pH)

Date	Parameter Description	Concentration
1/22/09	pH (S.U.)	7.0
2/12/09	pH (S.U.)	6.9
3/18/09	pH (S.U.)	7.0
4/22/09	pH (S.U.)	6.9
5/13/09	pH (S.U.)	7.0
6/24/09	pH (S.U.)	7.1
7/15/09	pH (S.U.)	7.2
8/19/09	pH (S.U.)	7.3
9/16/09	pH (S.U.)	7.2
10/15/09	pH (S.U.)	7.0
11/9/09	pH (S.U.)	7.1
12/7/09	pH (S.U.)	7.2
1/21/10	pH (S.U.)	7.1
2/17/10	pH (S.U.)	7.0
3/10/10	pH (S.U.)	7.2
4/15/10	pH (S.U.)	7.2
5/20/10	pH (S.U.)	7.2
6/17/10	pH (S.U.)	7.2
7/20/10	pH (S.U.)	7.7
8/17/10	pH (S.U.)	7.2
9/22/10	pH (S.U.)	7.1
10/20/10	pH (S.U.)	7.3
11/18/10	pH (S.U.)	7.0
1/19/11	pH (S.U.)	7.2
2/7/11	pH (S.U.)	7.2
2/16/11	pH (S.U.)	7.2

90% pH = 7.25 S.U.

VA0076805 Remington WWTP - Ambient Data (December - May)

Date	Parameter Description	Concentration
1/16/08	Temperature (°C)	0.3
2/20/08	Temperature (°C)	3.4
3/12/08	Temperature (°C)	8.0
4/16/08	Temperature (°C)	11.6
5/21/08	Temperature (°C)	13.8
12/10/08	Temperature (°C)	3.50
1/22/09	Temperature (°C)	0.0
2/12/09	Temperature (°C)	7.6
3/18/09	Temperature (°C)	7.9
4/22/09	Temperature (°C)	12.2
5/13/09	Temperature (°C)	14.9
12/7/09	Temperature (°C)	4.0
1/21/10	Temperature (°C)	4.40
2/17/10	Temperature (°C)	0.8
3/11/10	Temperature (°C)	8.7
4/15/10	Temperature (°C)	12.3
5/20/10	Temperature (°C)	15.9
1/19/11	Temperature (°C)	0.3
2/7/11	Temperature (°C)	3.0
2/16/11	Temperature (°C)	2.6

90% Temperature = 13.9°C

VA0076805 Remington WWTP - Ambient Data (June - November)

Date	Parameter Description	Concentration
6/18/08	Temperature (°C)	20.9
7/16/08	Temperature (°C)	25.0
8/13/08	Temperature (°C)	21.8
9/15/08	Temperature (°C)	24.5
10/16/08	Temperature (°C)	17.2
11/12/08	Temperature (°C)	7.7
6/24/09	Temperature (°C)	22.3
7/15/09	Temperature (°C)	22.2
8/19/09	Temperature (°C)	27.2
9/16/09	Temperature (°C)	22.3
10/15/09	Temperature (°C)	11.0
11/9/09	Temperature (°C)	9.1
6/7/10	Temperature (°C)	23.8
7/20/10	Temperature (°C)	26.8
8/17/10	Temperature (°C)	26.0
9/22/10	Temperature (°C)	20.4
10/20/10	Temperature (°C)	13.8
11/18/10	Temperature (°C)	9.1

90% Temperature = 26.2°C

VA0076805 Remington WWTP - Ambient Data (Hardness)

Due	Parameter Description	Concentration
1/30/03	Hardness (mg/L)	23
2/11/03	Hardness (mg/L)	26
5/29/03	Hardness (mg/L)	26
6/18/03	Hardness (mg/L)	27

Average Hardness = 25.5 mg/L

VA0076805 Remington WWTP - Effluent Data (pH)

Due	Outfall	Parameter Description	CONC MIN	Lim Min	CONC MAX	Lim Max	Comments
1/10/11	001	pH (S.U.)	6.73	6.0	7.91	9.0	Month
2/10/11	001	pH (S.U.)	6.97	6.0	7.92	9.0	Month
3/10/11	001	pH (S.U.)	6.80	6.0	7.57	9.0	Month
4/10/11	001	pH (S.U.)	6.81	6.0	8.58	9.0	Month
5/10/11	001	pH (S.U.)	6.94	6.0	7.76	9.0	Month
6/10/11	001	pH (S.U.)	7.18	6.0	8.07	9.0	Month
7/10/11	001	pH (S.U.)	7.10	6.0	8.15	9.0	Month
8/10/11	001	pH (S.U.)	7.18	6.0	8.09	9.0	Month
9/10/11	001	pH (S.U.)	6.69	6.0	7.96	9.0	Month
10/10/11	001	pH (S.U.)	6.47	6.0	7.90	9.0	Month
11/10/11	001	pH (S.U.)	6.90	6.0	7.97	9.0	Month
12/10/11	001	pH (S.U.)	6.85	6.0	7.80	9.0	Month
1/10/12	001	pH (S.U.)	6.70	6.0	7.94	9.0	Month
2/10/12	001	pH (S.U.)	6.49	6.0	7.83	9.0	Month
3/10/12	001	pH (S.U.)	6.90	6.0	7.78	9.0	Month
4/10/12	001	pH (S.U.)	6.65	6.0	7.95	9.0	Month
5/10/12	001	pH (S.U.)	6.92	6.0	7.84	9.0	Month
6/10/12	001	pH (S.U.)	6.94	6.0	7.94	9.0	Month
7/10/12	001	pH (S.U.)	6.93	6.0	8.39	9.0	Month
8/10/12	001	pH (S.U.)	7.03	6.0	8.67	9.0	Month
9/10/12	001	pH (S.U.)	6.94	6.0	8.52	9.0	Month
10/10/12	001	pH (S.U.)	7.35	6.0	8.43	9.0	Month

90% pH = 8.3 S.U.

M E M O R A N D U M

VIRGINIA STATE WATER CONTROL BOARD
Office of Water Resources Management
P.O. Box 11143
2111 N. Hamilton Street Richmond, Virginia 23230

Subject: Remington Regional STP
To: Fred T. Holt
From: M. Dale Phillips
Date: March 3, 1990
Copies: Joan Foundos, NRO

I have found the old model that Joan used in 1987 for the analysis of the Remington discharge for a flow of 0.75 MGD. I have run that model for the new flow of 2.0 MGD and attach the runs. The only thing that I changed was the flow from the STP.

According to this work the following limits would apply:

Flow = 2.0 MGD
CBOD5 = 20 mg/l
TKN = 3.0 mg/l
D.O. = 6.5 mg/l

The result is in accordance with Joan's original definition of antidegradation e.g. a drop in D.O. of < 0.5 mg/l.

The 3.0 mg/l TKN is assumed to be refractory organic nitrogen compounds and is in accordance with both our past and present methods.

1234567
4
MAR 1
Receive
NRO

FOR THE DISCHARGE AT THE BEGINNING OF THE SEGMENT:

FLOW = Ø MGD D.O. = 7Ø MG/L CBOD = Ø MG/L NBOD = Ø MG/L

THE RESULTS FOR SECTION 2 ARE

DISTANCE (MI) FROM HEAD OF SEGMENT	TOTAL DISTANCE (MI) FROM BEGINNING	D.O. (MG/L)	CBOD (MG/L)	NBOD (MG/L)
Ø	2.9	6.463281	12.33873	Ø
.5	3.3	6.86	12.09115	Ø
1	3.8	6.88	11.84853	Ø

****

SIMULATION COMPLETED

THE DATA FILE IS PRINTED BELOW FOR YOUR CONVENIENCE

```
2000 DATA "Remington"
2010 DATA "Rappahannock River"
2020 DATA 2.75,.5
2030 DATA 7.01,2.5,0,5.80
2035 REM     DATA FOR SEGMENT 1
2040 DATA 2.0,50,0,6.5
2050 DATA 2.5,.21,0
2060 DATA 2.8,8.2,30,250
2070 DATA 0,0,0
2075 REM     DATA FOR SEGMENT 2
2080 DATA 0,0,0,0
2090 DATA 15,.21,0
2100 DATA 1,8.2,30,250
2110 DATA 0,0,0
```

20 mg/l CBOD
3 mg/l TKN
6.5 mg/l DO

MODEL SIMULATION FOR THE Bemington DISCHARGE TO Rappahhannock River

==========

THE BACKGROUND CONDITIONS ARE:

FLOW = 7.01 MGD D.O. = 6.88 MG/L CBOD = 3.5 MG/L NBOD= 0 MG/L

OUTPUT WILL BE GENERATED EVERY .5 MILE FROM THE BEGINNING OF A SEGMENT

****

THE VARIABLES FOR SECTION 1 ARE:

The k rates shown are at 20 degrees C. The model corrects them.

Ka = 2.5 /DAY Kr = .21 /DAY Kn = 0 /DAY SATURATION D.O. = 7.64 MG/L

LENGTH = 2.8 MI VELOCITY = 8.2 MI/D TEMP. = 30 C ELEV. = 26

P = 0 MG/L/D R = 0 MG/L/D BENTHIC DEMAND = 0 MG/L/D

FOR THE DISCHARGE AT THE BEGINNING OF THE SEGMENT:

FLOW = 2 MGD D.O. = 6.5 MG/L CBOD = 50 MG/L NBOD = 0 MG/L

↳ CBOD 50 = CBOD of 20 mg/l

THE RESULTS FOR SECTION 1 ARE

DISTANCE (MI) FROM HEAD OF SEGMENT	TOTAL DISTANCE (MI) FROM BEGINNING	D.O. (MG/L)	CBOD (MG/L)	NBOD (MG/L)
0	0	6.79565	13.82187	0
.5	.5	6.69362	13.54452	0
1	1	6.614577	13.27275	0
1.5	1.5	6.55438	13.00642	0
2	2	6.509619	12.74544	0
2.5	2.5	6.477483	12.4897	0
2.8	2.8	6.463281	12.33873	0

Δ DO = .42

OK

****

THE VARIABLES FOR SECTION 2 ARE:

****

Pg 49

The k rates shown are at 20 degrees C. The model corrects them

MODEL SIMULATION FOR THE Remington DISCHARGE TO Rappahannock ...

==========

THE BACKGROUND CONDITIONS ARE:

FLOW = 7.01 MGD D.O. = 6.88 MG/L CBOD = 3.5 MG/L NBOD= 0 MG/L

OUTPUT WILL BE GENERATED EVERY .5 MILE FROM THE BEGINNING OF A SEGMENT

****

THE VARIABLES FOR SECTION 1 ARE:

The k rates shown are at 20 degrees C. The model corrects them.

Ka = 2.5 /DAY Kr = .21 /DAY Kn = 0 /DAY SATURATION D.O. = 7.64975
LENGTH = 2.8 MI VELOCITY = 8.2 MI/D TEMP. = 30 C ELEV. = 260
P = 0 MG/L/D R = 0 MG/L/D BENTHIC DEMAND = 0 MG/L/D

FOR THE DISCHARGE AT THE BEGINNING OF THE SEGMENT:

FLOW = 2.5 MGD D.O. = 6.5 MG/L CBOD = 42 MG/L NBOD = 0 MG/L

BOD42 = CBOD 16.8 mg/l = 17 mg/l

THE RESULTS FOR SECTION 1 ARE

DISTANCE (MI) FROM HEAD OF SEGMENT	TOTAL DISTANCE (MI) FROM BEGINNING	D.O. (MG/L)	CBOD (MG/L)	NBOD (MG/L)
0	0	6.780106	13.62093	0
.5	.5	6.684472	13.34762	0
1	1	6.610628	13.07979	0
1.5	1.5	6.554645	12.81734	0
2	2	6.513286	12.56015	0
2.5	2.5	6.483886	12.30813	0
2.8	2.8	6.471055	12.15935	0

****

THE VARIABLES FOR SECTION 2 ARE:

The k rates shown are at 20 degrees C. The model corrects them.

Ka = 15 /DAY Kr = .21 /DAY Kn = 0 /DAY SATURATION D.O. = 7.64975
LENGTH = 1 MI VELOCITY = 8.2 MI/D TEMP. = 30 C ELEV. = 260 F
P = 0 MG/L/D R = 0 MG/L/D BENTHIC DEMAND = 0 MG/L/D

FOR THE DISCHARGE AT THE BEGINNING OF THE SEGMENT:

FLOW = 0 MGD D.O. = 0 MG/L CBOD = 0 MG/L NBOD = 0 MG/L

THE RESULTS FOR SECTION 2 ARE

(MI) FROM HEAD OF SEGMENT	DISTANCE (MI) FROM BEGINNING	(MG/L)	(MG/L)	(MG/L)
0	2.8	6.471055	12.15935	0
.5	3.3	7.135887	11.91537	0
1	3.8	7.347312	11.67628	0

****

SIMULATION COMPLETED

2.5 mg/L

EFFLUENT = 16.8 mg/L cBOD5

3.0 mg/L TKN

6.5 mg/L D.O.

Note: Use 17 for cBOD

4/11/2013 11:12:32 AM

Facility = Remington WWTP - 2.0 MGD
Chemical = Zinc
Chronic averaging period = 4
WLAa = 130
WLAc = 130
Q.L. = 48
# samples/mo. = 1
# samples/wk. = 1

Summary of Statistics:

observations = 6
Expected Value = 71.4411
Variance = 1837.38
C.V. = 0.6
97th percentile daily values = 173.846
97th percentile 4 day average = 118.863
97th percentile 30 day average= 86.1617
< Q.L. = 2
Model used = BPJ Assumptions, Type 1 data

A limit is needed based on Acute Toxicity
Maximum Daily Limit = 130
Average Weekly limit = 130
Average Monthly LImit = 130

The data are:

49.8
59.9
24
28.8
51
50

4/11/2013 11:13:10 AM

Facility = Remington WWTP - 2.5 MGD
Chemical = Zinc
Chronic averaging period = 4
WLAa = 120
WLAc = 130
Q.L. = 48
# samples/mo. = 1
# samples/wk. = 1

Summary of Statistics:

observations = 6
Expected Value = 71.4411
Variance = 1837.38
C.V. = 0.6
97th percentile daily values = 173.846
97th percentile 4 day average = 118.863
97th percentile 30 day average= 86.1617
< Q.L. = 2
Model used = BPJ Assumptions, Type 1 data

A limit is needed based on Acute Toxicity
Maximum Daily Limit = 120
Average Weekly limit = 120
Average Monthly LImit = 120

The data are:

49.8
59.9
24
28.8
51
50

VA0076805 Remington WWTP - Effluent Data (Zinc)

Due	Outfall	Parameter Description	CONC AVG	Lim Avg	Comments
1/10/11	001	Zinc (µg/L)	<QL (49.8)	NL	DMR Submittal
7/10/11	001	Zinc (µg/L)	<QL (59.9)	NL	DMR Submittal
1/10/12	001	Zinc (µg/L)	<QL (24)	NL	DMR Submittal
7/10/12	001	Zinc (µg/L)	<QL (28.8)	NL	DMR Submittal
NA	001	Zinc (µg/L)	51	NA	Application
NA	001	Zinc (µg/L)	<50*	NA	Application
NA	001	Zinc (µg/L)	59.1	NA	Application

*The value reported is less than the established laboratory QL of 50 µg/L. Because the laboratory QL is only slightly higher than the QL that will be required by the reissued permit (48 µg/L), a value of 50 µg/L will be utilitzed in limit derivation.

4/11/2013 11:24:34 AM

Facility = Remington WWTP - 2.0 MGD
Chemical = Copper
Chronic averaging period = 4
WLAa = 15
WLAc = 10
Q.L. = 5.7
# samples/mo. = 1
# samples/wk. = 1

Summary of Statistics:

observations = 1
Expected Value = 80
Variance = 2304
C.V. = 0.6
97th percentile daily values = 194.673
97th percentile 4 day average = 133.103
97th percentile 30 day average= 96.4842
< Q.L. = 0
Model used = BPJ Assumptions, type 2 data

A limit is needed based on Chronic Toxicity
Maximum Daily Limit = 14.6257478405323
Average Weekly limit = 14.6257478405323
Average Monthly LImit = 14.6257478405323

The data are:

80

4/11/2013 11:24:54 AM

Facility = Remington WWTP - 2.5 MGD
Chemical = Copper
Chronic averaging period = 4
WLAa = 14
WLAc = 9.5
Q.L. = 5.7
# samples/mo. = 1
# samples/wk. = 1

Summary of Statistics:

observations = 1
Expected Value = 80
Variance = 2304
C.V. = 0.6
97th percentile daily values = 194.673
97th percentile 4 day average = 133.103
97th percentile 30 day average= 96.4842
< Q.L. = 0
Model used = BPJ Assumptions, type 2 data

A limit is needed based on Chronic Toxicity
Maximum Daily Limit = 13.8944604485057
Average Weekly limit = 13.8944604485057
Average Monthly LImit = 13.8944604485057

The data are:

80

VA0076805 Remington WWTP - Effluent Data (Copper)

Due	Outfall	Parameter Description	CONC AVG	Lim Avg	Comments
NA	001	Copper (µg/L)	80	NA	Application
NA	001	Copper (µg/L)	<50*	NA	Application
NA	001	Copper (µg/L)	<50*	NA	Application

*The values reported are less than the established laboratory QL of 50 µg/L. Because the laboratory QL is siginificantly higher than the QL that will be required by the reissued permit (5.7 µg/L), these values will not be utilized in limit derivation.

Public Notice – Environmental Permit

PURPOSE OF NOTICE: To seek public comment on a draft permit from the Department of Environmental Quality that will allow the release of treated wastewater into a water body in Fauquier County, Virginia.

PUBLIC COMMENT PERIOD: June 27, 2013 to July 26, 2013

PERMIT NAME: Virginia Pollutant Discharge Elimination System Permit – Wastewater issued by DEQ, under the authority of the State Water Control Board

APPLICANT NAME, ADDRESS AND PERMIT NUMBER: Fauquier County Water and Sanitation Authority, 7172 Kennedy Road, Warrenton, VA 20187, VA0076805

NAME AND ADDRESS OF FACILITY: Remington Wastewater Treatment Plant, 12523 Lucky Hill Road, Remington, VA 22734

PROJECT DESCRIPTION: The Fauquier County Water and Sanitation Authority has applied for a reissuance of a permit for the public Remington Wastewater Treatment Plant. The applicant proposes to release treated sewage wastewaters from residential areas at a rate of 2.0 million gallons per day into a water body. The sludge will be disposed by land application by contractor. The facility proposes to release the treated sewage wastewater in the Rappahannock River in Fauquier County in the Rappahannock River watershed. A watershed is the land area drained by a river and its incoming streams. The permit will limit the following pollutants to amounts that protect water quality: pH, $CBOD_5$, Total Suspended Solids, Dissolved Oxygen, Total Recoverable Zinc, Total Kjeldahl Nitrogen, Total Nitrogen (calendar year), Total Phosphorus (calendar year), and *E. coli*. The permit will monitor the following pollutants to protect water quality: Nitrate+Nitrite, Dissolved Copper, Total Hardness, Acute Toxicity and Chronic Toxicity.

This facility is subject to the requirements of 9VAC25-820 and has registered for coverage under the General VPDES Watershed Permit Regulation for Total Nitrogen and Total Phosphorus Discharges and Nutrient Trading in the Chesapeake Watershed in Virginia.

HOW TO COMMENT AND/OR REQUEST A PUBLIC HEARING: DEQ accepts comments and requests for public hearing by hand-delivery, e-mail, fax or postal mail. All comments and requests must be in writing and be received by DEQ during the comment period. Submittals must include the names, mailing addresses and telephone numbers of the commenter/requester and of all persons represented by the commenter/requester. A request for public hearing must also include: 1) The reason why a public hearing is requested. 2) A brief, informal statement regarding the nature and extent of the interest of the requester or of those represented by the requester, including how and to what extent such interest would be directly and adversely affected by the permit. 3) Specific references, where possible, to terms and conditions of the permit with suggested revisions. A public hearing may be held, including another comment period, if public response is significant, based on individual requests for a public hearing, and there are substantial, disputed issues relevant to the permit.

CONTACT FOR PUBLIC COMMENTS, DOCUMENT REQUESTS AND ADDITIONAL INFORMATION: The public may review the documents at the DEQ-Northern Regional Office by appointment, or may request electronic copies of the draft permit and fact sheet.
Name: Susan Mackert
Address: DEQ-Northern Regional Office, 13901 Crown Court, Woodbridge, VA 22193
Phone: (703) 583-3853 E-mail: susan.mackert@deq.virginia.gov Fax: (703) 583-3821

Revised 2/2003

State "Transmittal Checklist" to Assist in Targeting
Municipal and Industrial Individual NPDES Draft Permits for Review

Part I. State Draft Permit Submission Checklist

In accordance with the MOA established between the Commonwealth of Virginia and the United States Environmental Protection Agency, Region III, the Commonwealth submits the following draft National Pollutant Discharge Elimination System (NPDES) permit for Agency review and concurrence.

Facility Name:	Remington WWTP
NPDES Permit Number:	VA0076805
Permit Writer Name:	Susan Mackert
Date:	January 22, 2013

Major [X] **Minor [ ]** **Industrial [ ]** **Municipal [X]**

I.A. Draft Permit Package Submittal Includes:	**Yes**	**No**	**N/A**
1. Permit Application?	X		
2. Complete Draft Permit (for renewal or first time permit – entire permit, including boilerplate information)?	X		
3. Copy of Public Notice?	X		
4. Complete Fact Sheet?	X		
5. A Priority Pollutant Screening to determine parameters of concern?	X		
6. A Reasonable Potential analysis showing calculated WQBELs?	X		
7. Dissolved Oxygen calculations?	X		
8. Whole Effluent Toxicity Test summary and analysis?	X		
9. Permit Rating Sheet for new or modified industrial facilities?			X

I.B. Permit/Facility Characteristics	**Yes**	**No**	**N/A**
1. Is this a new, or currently unpermitted facility?		X	
2. Are all permissible outfalls (including combined sewer overflow points, non-process water and storm water) from the facility properly identified and authorized in the permit?	X		
3. Does the fact sheet **or** permit contain a description of the wastewater treatment process?	X		
4. Does the review of PCS/DMR data for at least the last 3 years indicate significant non-compliance with the existing permit?		X	
5. Has there been any change in streamflow characteristics since the last permit was developed?		X	
6. Does the permit allow the discharge of new or increased loadings of any pollutants?		X	
7. Does the fact sheet **or** permit provide a description of the receiving water body(s) to which the facility discharges, including information on low/critical flow conditions and designated/existing uses?	X		
8. Does the facility discharge to a 303(d) listed water?		X	
a. Has a TMDL been developed and approved by EPA for the impaired water?			X
b. Does the record indicate that the TMDL development is on the State priority list and will most likely be developed within the life of the permit?			X
c. Does the facility discharge a pollutant of concern identified in the TMDL or 303(d) listed water?			X
9. Have any limits been removed, or are any limits less stringent, than those in the current permit?		X	
10. Does the permit authorize discharges of storm water?		X	

I.B. Permit/Facility Characteristics – cont.	Yes	No	N/A
11. Has the facility substantially enlarged or altered its operation or substantially increased its flow or production?		X	
12. Are there any production-based, technology-based effluent limits in the permit?		X	
13. Do any water quality-based effluent limit calculations differ from the State's standard policies or procedures?		X	
14. Are any WQBELs based on an interpretation of narrative criteria?		X	
15. Does the permit incorporate any variances or other exceptions to the State's standards or regulations?		X	
16. Does the permit contain a compliance schedule for any limit or condition?		X	
17. Is there a potential impact to endangered/threatened species or their habitat by the facility's discharge(s)?		X	
18. Have impacts from the discharge(s) at downstream potable water supplies been evaluated?	X		
19. Is there any indication that there is significant public interest in the permit action proposed for this facility?		X	
20. Have previous permit, application, and fact sheet been examined?	X		

Part II. NPDES Draft Permit Checklist

Region III NPDES Permit Quality Checklist – for POTWs

II.A. Permit Cover Page/Administration	Yes	No	N/A
1. Does the fact sheet or permit describe the physical location of the facility, including latitude and longitude (not necessarily on permit cover page)?	X		
2. Does the permit contain specific authorization-to-discharge information (from where to where, by whom)?	X		

II.B. Effluent Limits – General Elements	Yes	No	N/A
1. Does the fact sheet describe the basis of final limits in the permit (e.g., that a comparison of technology and water quality-based limits was performed, and the most stringent limit selected)?	X		
2. Does the fact sheet discuss whether "antibacksliding" provisions were met for any limits that are less stringent than those in the previous NPDES permit?	X		

II.C. Technology-Based Effluent Limits (POTWs)	Yes	No	N/A
1. Does the permit contain numeric limits for ALL of the following: BOD (or alternative, e.g., CBOD, COD, TOC), TSS, and pH?	X		
2. Does the permit require at least 85% removal for BOD (or BOD alternative) and TSS (or 65% for equivalent to secondary) consistent with 40 CFR Part 133?	X		
a. If no, does the record indicate that application of WQBELs, or some other means, results in more stringent requirements than 85% removal or that an exception consistent with 40 CFR 133.103 has been approved?			X
3. Are technology-based permit limits expressed in the appropriate units of measure (e.g., concentration, mass, SU)?	X		
4. Are permit limits for BOD and TSS expressed in terms of both long term (e.g., average monthly) and short term (e.g., average weekly) limits?	X		
5. Are any concentration limitations in the permit less stringent than the secondary treatment requirements (30 mg/l BOD5 and TSS for a 30-day average and 45 mg/l BOD5 and TSS for a 7-day average)?		X	
a. If yes, does the record provide a justification (e.g., waste stabilization pond, trickling filter, etc.) for the alternate limitations?			X

II.D. Water Quality-Based Effluent Limits	Yes	No	N/A
1. Does the permit include appropriate limitations consistent with 40 CFR 122.44(d) covering State narrative and numeric criteria for water quality?	X		
2. Does the fact sheet indicate that any WQBELs were derived from a completed and EPA approved TMDL?			X
3. Does the fact sheet provide effluent characteristics for each outfall?	X		
4. Does the fact sheet document that a "reasonable potential" evaluation was performed?	X		
a. If yes, does the fact sheet indicate that the "reasonable potential" evaluation was performed in accordance with the State's approved procedures?	X		
b. Does the fact sheet describe the basis for allowing or disallowing in-stream dilution or a mixing zone?	X		
c. Does the fact sheet present WLA calculation procedures for all pollutants that were found to have "reasonable potential"?	X		
d. Does the fact sheet indicate that the "reasonable potential" and WLA calculations accounted for contributions from upstream sources (i.e., do calculations include ambient/background concentrations)?	X		
e. Does the permit contain numeric effluent limits for all pollutants for which "reasonable potential" was determined?	X		
5. Are all final WQBELs in the permit consistent with the justification and/or documentation provided in the fact sheet?	X		
6. For all final WQBELs, are BOTH long-term AND short-term effluent limits established?	X		
7. Are WQBELs expressed in the permit using appropriate units of measure (e.g., mass, concentration)?	X		
8. Does the record indicate that an "antidegradation" review was performed in accordance with the State's approved antidegradation policy?	X		

II.E. Monitoring and Reporting Requirements	Yes	No	N/A
1. Does the permit require at least annual monitoring for all limited parameters and other monitoring as required by State and Federal regulations?	X		
a. If no, does the fact sheet indicate that the facility applied for and was granted a monitoring waiver, AND, does the permit specifically incorporate this waiver?			
2. Does the permit identify the physical location where monitoring is to be performed for each outfall?	X		
3. Does the permit require at least annual influent monitoring for BOD (or BOD alternative) and TSS to assess compliance with applicable percent removal requirements?		X	
4. Does the permit require testing for Whole Effluent Toxicity?	X		

II.F. Special Conditions	Yes	No	N/A
1. Does the permit include appropriate biosolids use/disposal requirements?	X		
2. Does the permit include appropriate storm water program requirements?			X
3. If the permit contains compliance schedule(s), are they consistent with statutory and regulatory deadlines and requirements?			X
4. Are other special conditions (e.g., ambient sampling, mixing studies, TIE/TRE, BMPs, special studies) consistent with CWA and NPDES regulations?			X
5. Does the permit allow/authorize discharge of sanitary sewage from points other than the POTW outfall(s) or CSO outfalls [i.e., Sanitary Sewer Overflows (SSOs) or treatment plant bypasses]?		X	
6. Does the permit authorize discharges from Combined Sewer Overflows (CSOs)?		X	
a. Does the permit require implementation of the "Nine Minimum Controls"?		X	
b. Does the permit require development and implementation of a "Long Term Control Plan"?		X	
c. Does the permit require monitoring and reporting for CSO events?		X	
7. Does the permit include appropriate Pretreatment Program requirements?	X		

II.G. Standard Conditions	Yes	No	N/A
1. Does the **permit** contain all 40 CFR 122.41 standard conditions or the State equivalent (or more stringent) conditions?	X		

List of Standard Conditions – 40 CFR 122.41

Duty to comply	Property rights	Reporting Requirements
Duty to reapply	Duty to provide information	Planned change
Need to halt or reduce activity not a defense	Inspections and entry	Anticipated noncompliance
	Monitoring and records	Transfers
Duty to mitigate	Signatory requirement	Monitoring reports
Proper O & M	Bypass	Compliance schedules
Permit actions	Upset	24-Hour reporting
		Other non-compliance

2. Does the permit contain the additional standard condition (or the State equivalent or more stringent conditions) for POTWs regarding notification of new introduction of pollutants and new industrial users [40 CFR 122.42(b)]?	X		

Part III. Signature Page

Based on a review of the data and other information submitted by the permit applicant, and the draft permit and other administrative records generated by the Department/Division and/or made available to the Department/Division, the information provided on this checklist is accurate and complete, to the best of my knowledge.

Name	Susan Mackert
Title	Environmental Specialist II, Senior II
Signature	Susan Mackert
Date	January 22, 2013