Attachment A

Topographic, Aerial and Other Site Maps

1000 ft

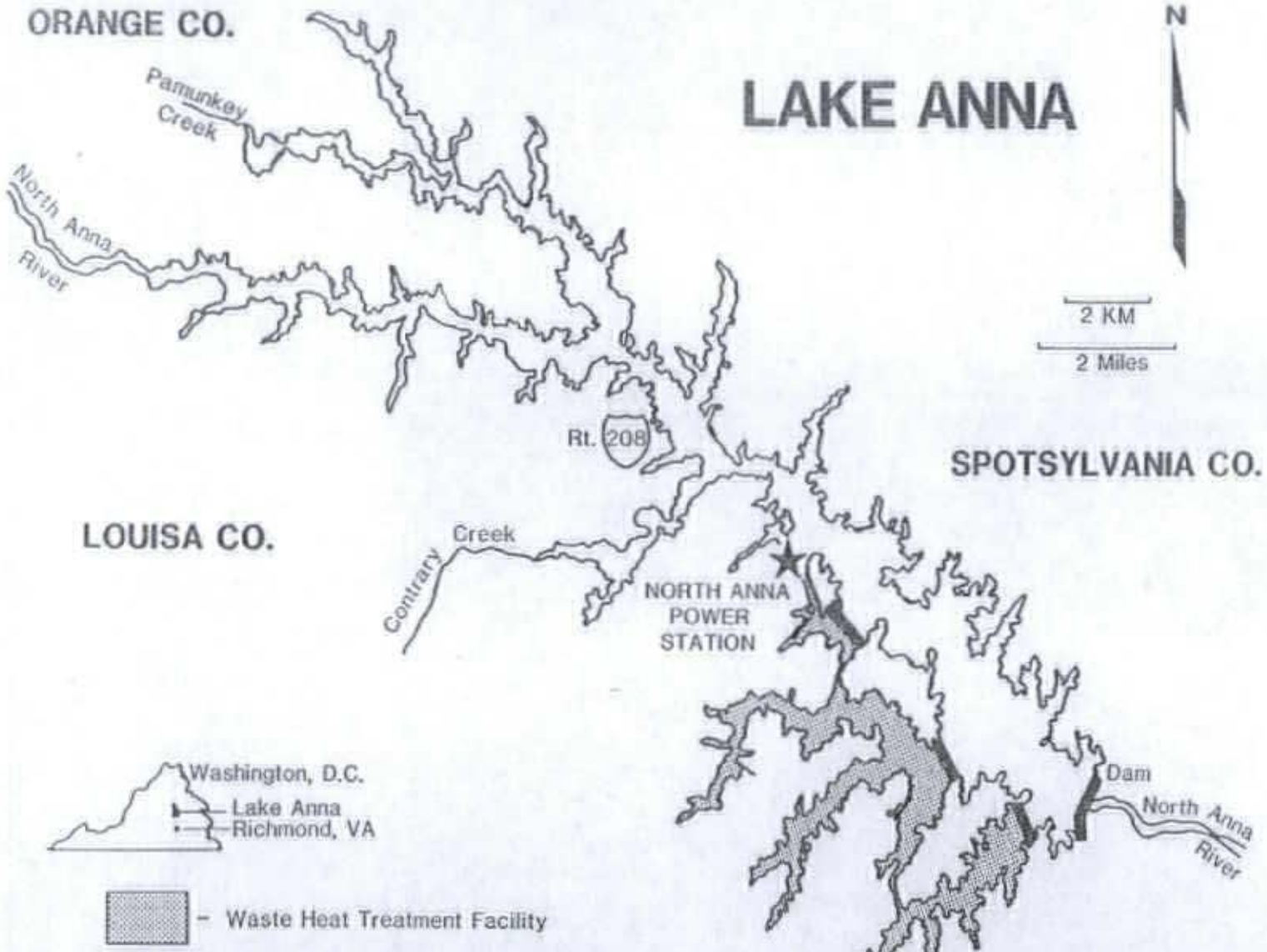
LAKE ANNA
N
2 KM
2 Miles
ORANGE CO.
Pamunkey Creek
North Anna River
Rt. 208
SPOTSYLVANIA CO.
LOUISA CO.
Contrary Creek
NORTH ANNA POWER STATION
Dam
North Anna River
Washington, D.C.
Lake Anna
Richmond, VA
- Waste Heat Treatment Facility

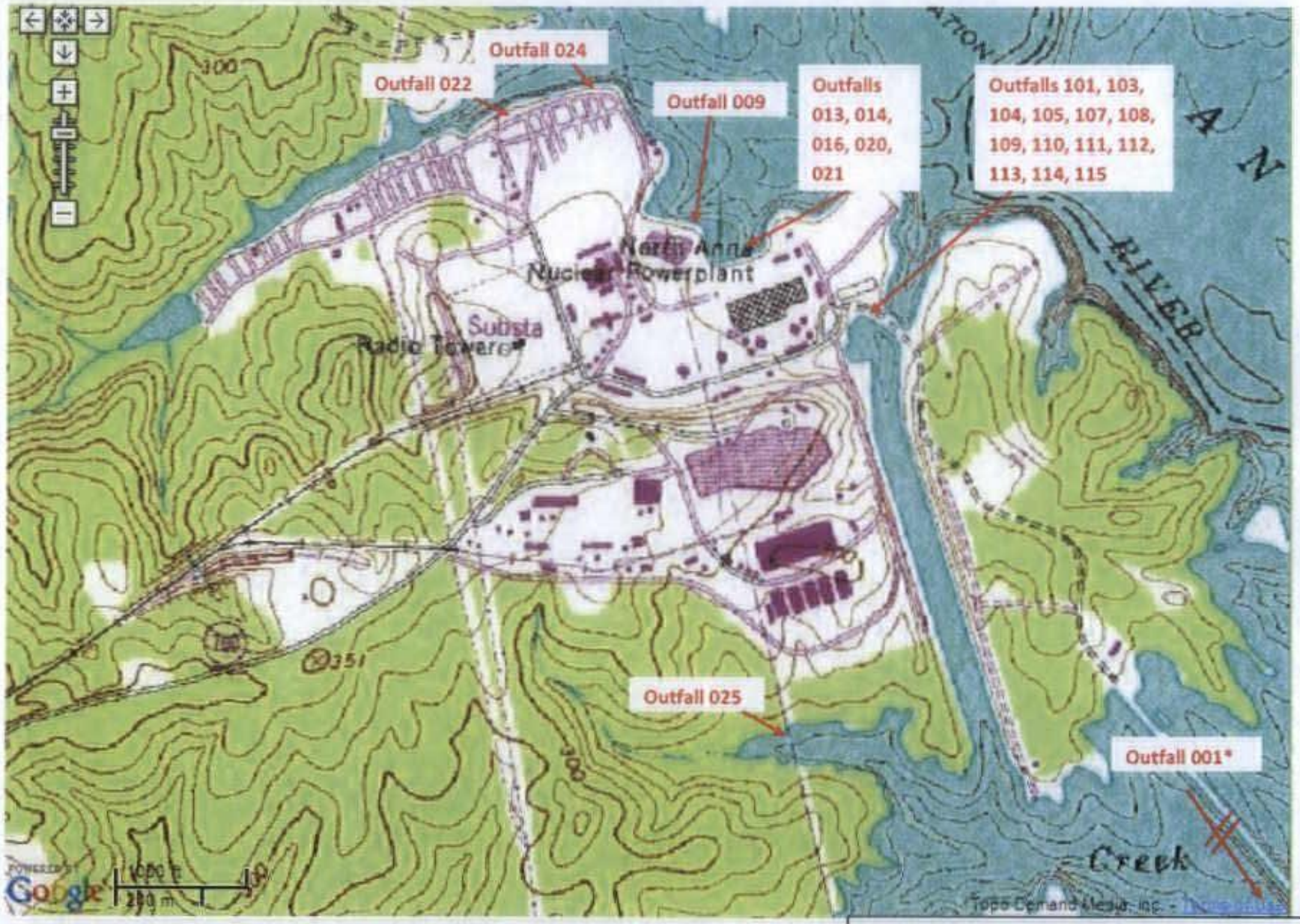

*Outfall 001 is down-lake, off the WHTF Lagoon 3 dam as depicted on URS topographic map (also included in this Attachment).

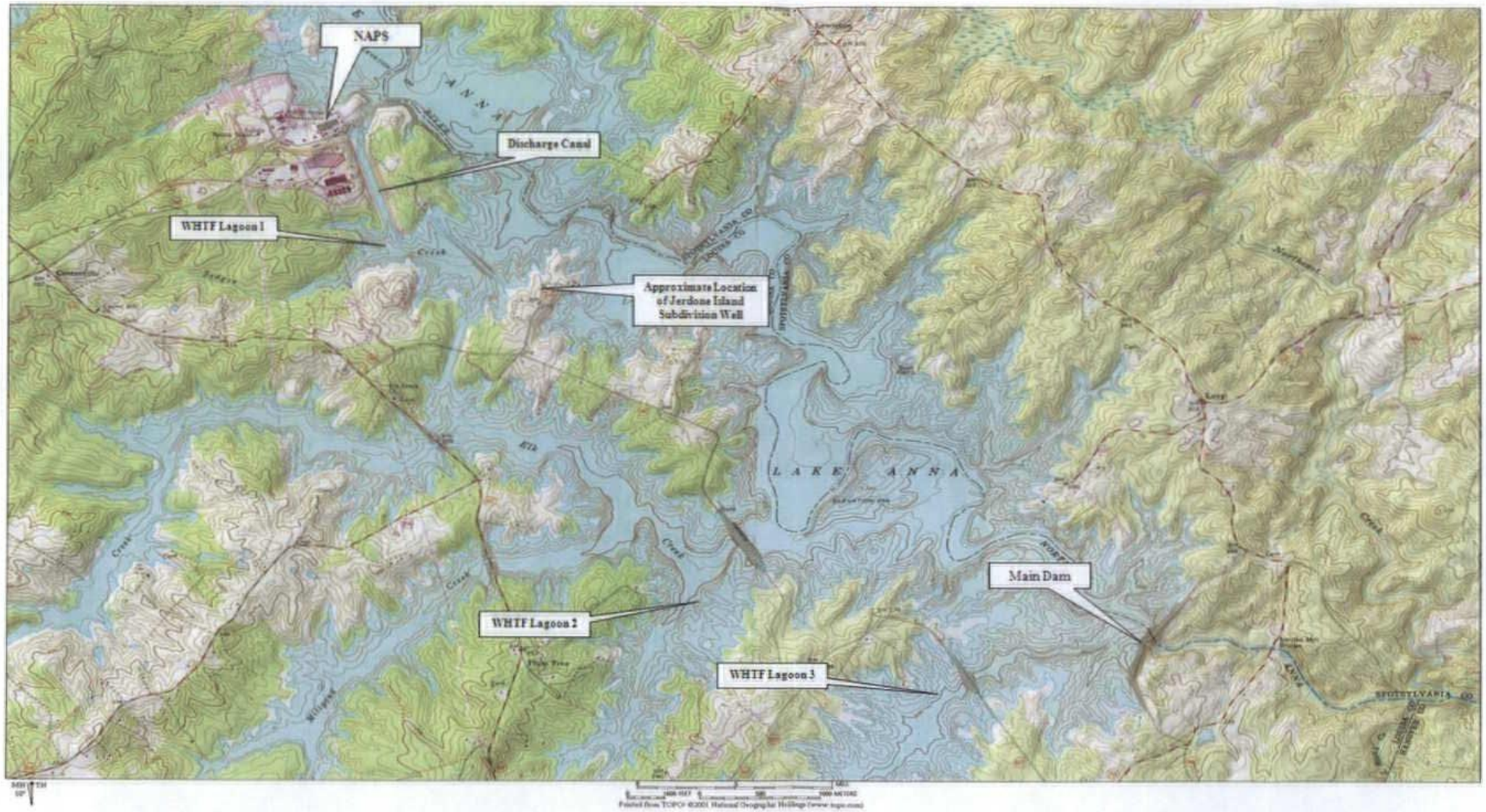

Source: USGS Lake Anna West, VA Quad, 1983
TOPO! ©2000 National Geographic Holdings

Date: 4/16/2006		URS Project No.: 11655856	
Drawn by: RW	Checked by: RW	Reviewed by: RL	Approved by: JS
Scale: As Shown:		File name: Figure I.14-1	

Dominion Generation North Anna Power Station

Figure I.14-1 Municipal Services at Risk

URS

URS CORPORATION
5540 FALMOUTH ST., SUITE 201
RICHMOND, VA 23230

Attachment B

Process Line Drawings

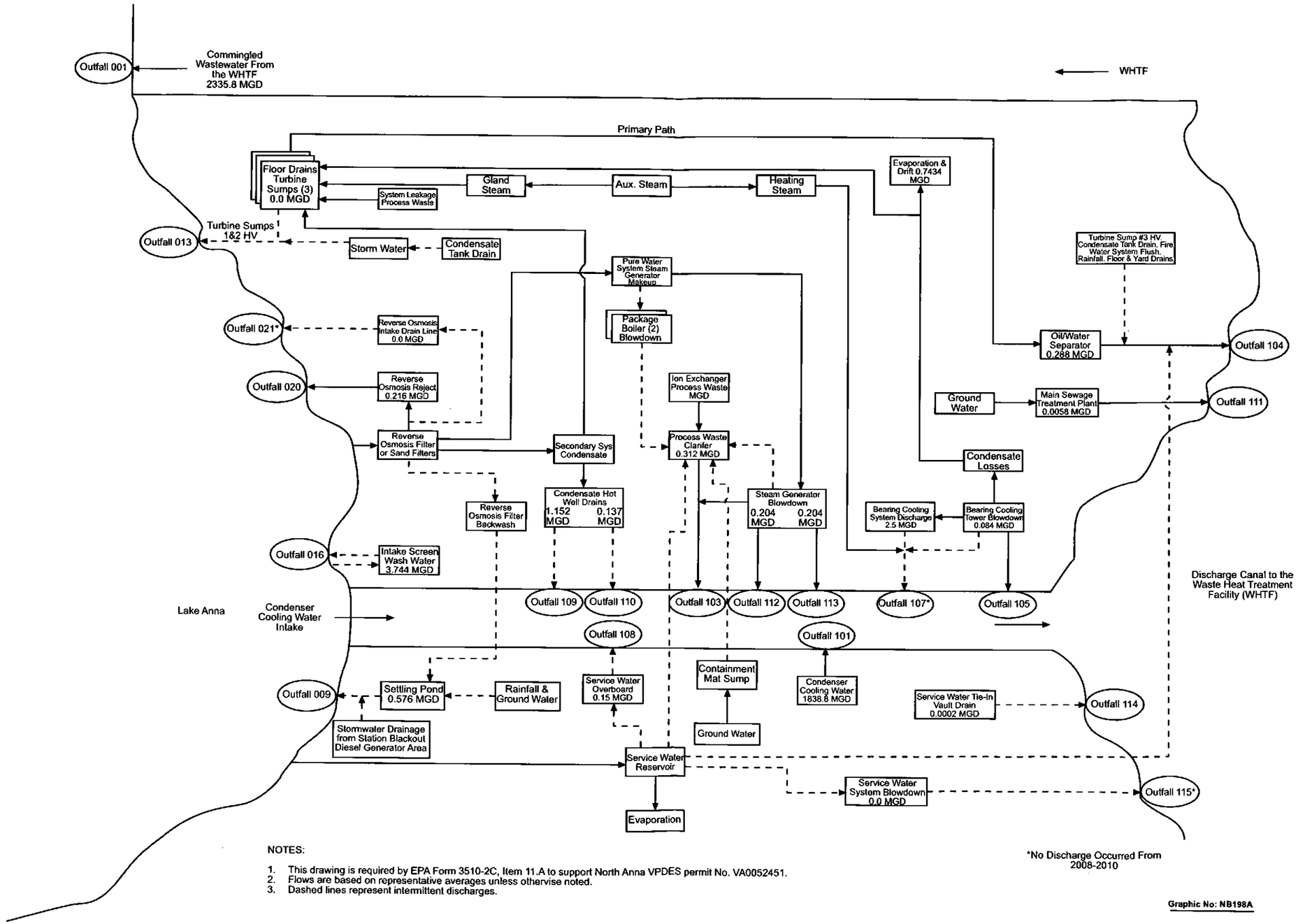

NOTES:

1. This drawing is required by EPA Form 3510-2C, Item 11.A to support North Anna VPDES permit No. VA0052451.
2. Flows are based on representative averages unless otherwise noted.
3. Dashed lines represent intermittent discharges.

*No Discharge Occurred From 2008-2010

Graphic No: NB198A

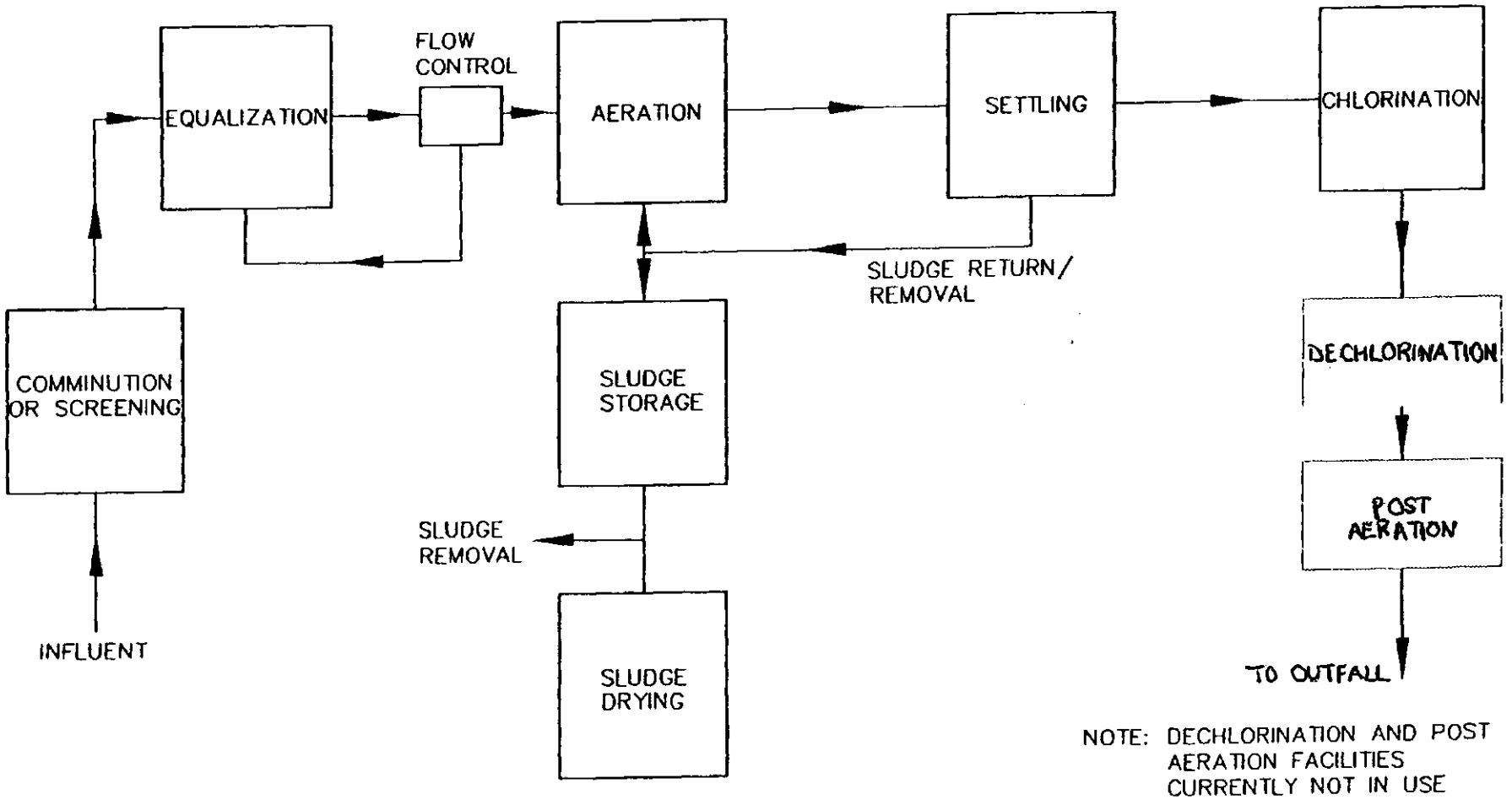

NORTH ANNA NUCLEAR POWER PLANT WWTP
PROCESS DIAGRAM

FIGURE 1

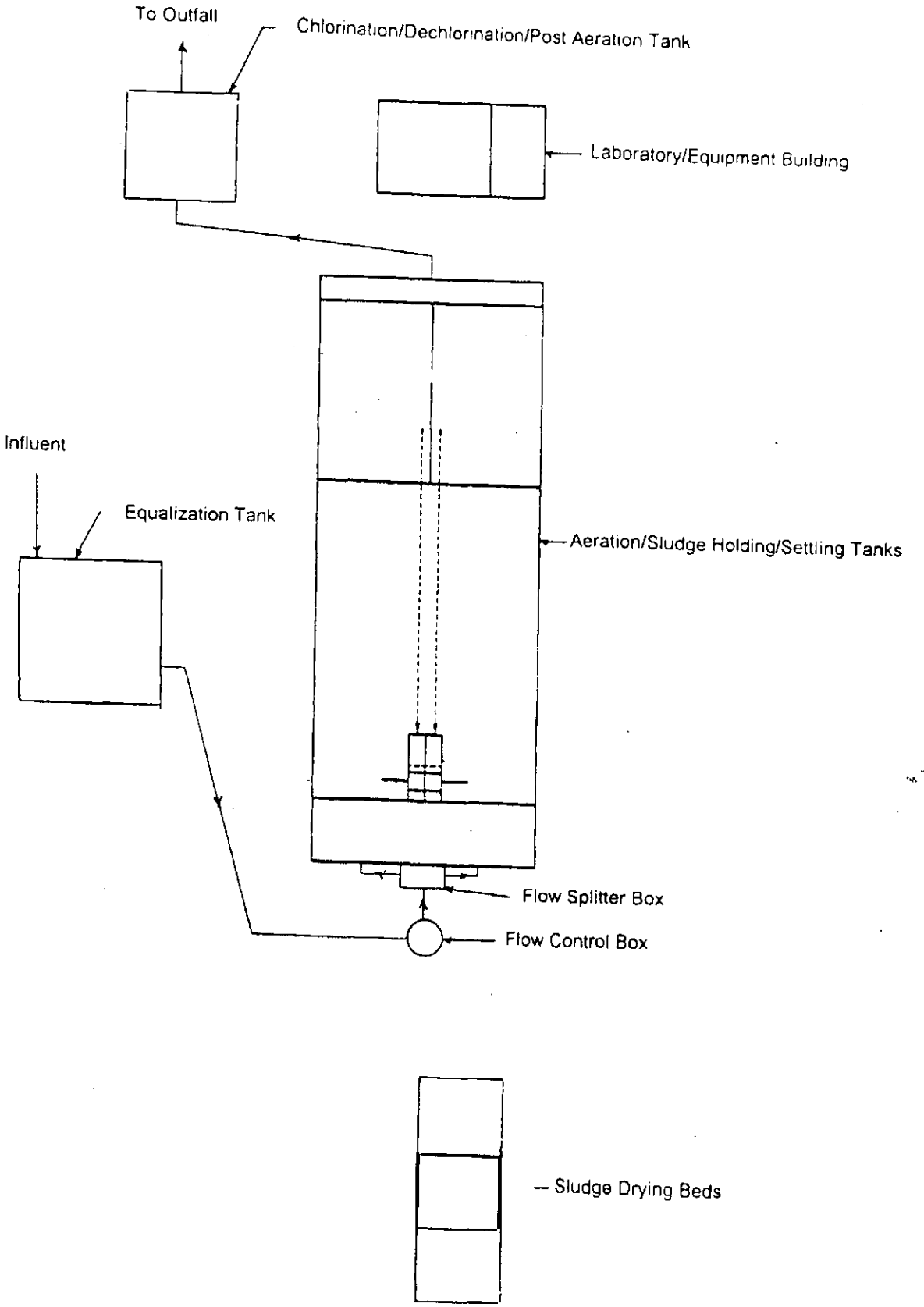

SITE PLAN

FIGURE 2

Attachment C

Potential Discharges Not Covered by Analysis

Numerous chemicals are used in minor and bulk amounts at the station. A list of the bulk chemicals employed is included below. Certain chemicals have multiple uses, and the stated purpose is not preclusive of other purposes or functions. Material Safety Data Sheets (MSDSs) will be provided upon request.

System	Chemical
Bearing Cooling Water	Nalco 7384 (zinc chloride) Flogard MS6208 PCL 713 (phosphate) Dianodic DN2472 Nalco 2894 (biocide) Acti-Brom 1318 (bromine) Sodium hypochlorite Calgon H-900 (biocide) Calgon EVAC (biocide) Cortec VPCI-337
Service Water Cooling Water	Calgon TRC-256 Nalco 3DT177 Nalco 3DT180 ONDEO H-130 Calgon H-901G Calgon H-300 Calgon Poly EZ 7736 AB Aquashade (dye) Potassium hydroxide Potassium chromate Potassium dichromate Ion exchange resin Nalcolyte 7134 Cortec VPCI-337
Condenser Hotwell	ETA (monoethanolamine) Hydrazine Ammonium hydroxide
Steam Generator Blowdown and Wet Layup	ETA (monoethanolamine) Hydrazine Ammonium hydroxide Morpholine AMP (amino methyl propanol) MPA (methoxypropylamine) DMA (dimethylarnine) Carbohydrazide
Station Chillers	CS Corrosion Inhibitor GE Inhibitor AZ8100 GE Corrshield MD4106 NALCO 7339
Water Purification	KLARAID IC1171 KLARAID CDP1339 KLARAID CDP1318 SPECTRUS NX106 SPECTRUS DT1404

Attachment D

Effluent Sampling Documents

Dominion Resources Services, Inc.
5000 Dominion Boulevard, Glen Allen, VA 23060
Web Address: www.dom.com

Dominion®

May 10, 2011

Susan Mackert
Northern Regional Office
13901 Crown Court
Woodbridge, VA 22193

Re: Sampling / Testing Plan and Requests for Waivers
Reissuance of VPDES Permit No. VA0052451
Dominion - North Anna Power Station

Dear Ms. Mackert:

Dominion is preparing the application for reissuance of the VPDES permit for the North Anna Power Station. The current permit expires on October 24, 2012. In accordance with the requirements as we understand them, we are developing a sampling plan to include the upcoming work planned for this facility. We request the following sampling and testing waivers associated with the VPDES permit reissuance application:

1. The sample results from Outfall 001 adequately characterize the effluent discharged into state waters. Accordingly, we request that testing requirements for internal outfalls 103, 104, 105, 107, 108, 109, 110, 112, 113, 114 and 115 be limited to the parameters monitored in the effective VPDES permit and all other monitoring requirements, including the 24-hour composite sample requirement, be waived.

2. For Outfalls 013 and 020, we request that the requirement for 24-hour composite samples be waived and grab samples be allowed. Effluent quality is not expected to vary greatly during a 24-hour period, and thus grab samples are adequately sufficient to characterize the effluent.

3. Dominion requests that testing requirements for delisted priority pollutants (e.g. trichlorofluoromethane, bis (chloromethyl) ether, and dichlorodifluoromethane) be waived for all sampled outfalls.

4. For all stormwater samples, we request that the requirement for flow-weighted composite samples be waived and only grab samples be taken. Historic data suggest little difference between the grab sample and composite sample results, with the grab sample results being equal to or greater than the composite sample results approximately 75% of the time (141 of 180 observations) thus suggesting that grab samples provide a more conservative characterization of the discharge (see the enclosed stormwater data from the 2007 permit reissuance application). Additionally, for comparison purposes, Dominion would like to provide stormwater data for all outfalls based on one storm event; pulling both grab samples

and flow-weighted composite samples for six outfalls makes this task difficult. Given these considerations, the stormwater quality is most conservatively characterized by grab samples.

5. For all sampled outfalls (except Outfall 111), we request a sampling waiver for fecal coliform as no station industrial activities contribute to this parameter.

6. With respect to sampling for the Water Quality Standards parameters, we request sampling and analysis relief for tributyltin (TBT). This parameter is believed to be absent from the discharges as the facility does not employ this parameter onsite nor does it perform any ship maintenance activities.

Aside from the waivers requested, all application sample testing will be conducted in accordance with all applicable requirements.

The submission of EPA Form 2A for internal sewage treatment plant outfalls (e.g. outfall 111) is not a specified regulatory requirement; however, Dominion intends to submit this form in support of the permitting of these internal outfalls. Accordingly, we propose to complete item A.12 for internal outfall 111 utilizing existing DMR data (generated from January 2008 – December 2010) and perform a minimum of one sample analysis for any remaining parameters. All samples for this outfall will be grab samples.

Dominion requests that representative sampling be allowed for identical outfalls. Specifically, we request that intake samples be representative of Outfall 016. Discharges from Outfall 016 consist of intake screen wash water where no additional chemicals are added to the intake water (i.e. pure lake water). Similarly, Outfall 021 is substantially identical to Outfall 020; as Outfall 021 is permitted for emergency situations and has never been used, we request that Outfall 020 samples be representative of Outfall 021. Outfall 013 serves as an alternative discharge route for internal Outfall 104. We request that effluent data from Outfall 104 may be used for Outfall 013 in the event that a discharge from Outfall 013 is not available.

A sample plan summary is also included with this correspondence.

Dominion appreciates this opportunity to review these requirements and coordinate our sampling plan with your agency. If you have any questions, please contact Gina Kelly 804/273-3174 or Ken Roller at 804/273-3494.

Sincerely,

Cathy C. Taylor

Cathy C. Taylor
Director, Electric Environmental Services

Sample Plan Summary

To complete EPA Form 2C:

- Sample and provide analyses for all process water outfalls discharging directly to Lake Anna and internal Outfall 111.
- Use all data generated for VPDES permit compliance (i.e. January 2008 –December 2010 DMR data and 2008-2010 Part I.C.2 Water Quality Standards data); supplement VPDES permit compliance data with one analysis for each of the parameters specified in Table 1 which includes both Form 2C parameters and the Water Quality Standards.
- Based on the waivers requested above and the Form 2C instructions which allow for grab samples-only when the retention period is greater than 24 hours, utilize grab samples for all parameters except temperature and pH at Outfall 001 which will use immersion and stabilization.
- Utilize representative samples as follows:
    - Intake data will be representative of Outfall 016.
    - Outfall 020 data will be representative of Outfall 021.
    - Outfall 104 data may be used to represent Outfall 013, should a representative sample of the discharge from Outfall 013 not be available.
    - Outfall 001 data will characterize the effluent discharged into state waters. DMR data available for Internal Outfalls 103, 104, 105, 107, 108, 109, 110, 112, 113, 114 and 115 will also be submitted.
- Present data for internal outfall 111 on the EPA Form 2A.

To complete the EPA Form 2A:

- Internal Outfall 111 (existing and upgraded Units 1 & 2 STP)
    - Utilize grab samples.
    - Use all data generated for VPDES permit compliance (i.e. January 2008 – December 2010 DMR data); supplement DMR data with one analysis each for temperature and fecal coliform.

To complete EPA Form 2F:

- Sample and analyze grab samples for all stormwater discharges.

Dominion Resources Services, Inc.
5000 Dominion Boulevard, Glen Allen, VA 23060
Web Address: www.dom.com

Dominion®

Certified Mail
Return Receipt Requested

June 24, 2011

Susan Mackert
Northern Regional Office
13901 Crown Court
Woodbridge, VA 22193

Re: Addendum to the Sampling / Testing Plan and Requests for Waivers
Reissuance of VPDES Permit No. VA0052451
Dominion - North Anna Power Station

Dear Ms. Mackert:

Upon review, an omission was noted in our original sampling plan and waiver request letter submitted to DEQ on May 10, 2011. Specifically, we request that testing requirements for internal outfall 101 be limited to the parameters monitored in the effective VPDES permit (i.e. flow and temperature) and all other monitoring requirements, including the 24-hour composite sample requirement, be waived. This internal outfall discharges condenser cooling water where the only parameter of concern is temperature. Also, the sample results from Outfall 001 adequately characterize the effluent discharged into state waters, including contributions from this source of wastewater.

Dominion appreciates this opportunity to review these requirements and coordinate our sampling plan with your agency. If you have any questions, please contact Gina Kelly 804/273-3174 or Ken Roller at 804/273-3494.

Sincerely,

Cathy C. Taylor

Cathy C. Taylor
Director, Electric Environmental Services

COMMONWEALTH of VIRGINIA

DEPARTMENT OF ENVIRONMENTAL QUALITY
NORTHERN REGIONAL OFFICE
13901 Crown Court, Woodbridge, Virginia 22193
(703) 583-3800 Fax (703) 583-3821
www.deq.virginia.gov

Douglas W. Domenech
Secretary of Natural Resources

David K. Paylor
Director

Thomas A. Faha
Regional Director

July 27, 2011

Ms. Cathy C. Taylor
Director, Electric Environmental Services
Dominion Virginia Power
5000 Dominion Boulevard
Glen Allen, VA 23060

Re: Dominion – North Anna Power Station, VPDES Permit No. VA0052451

Dear Ms. Taylor:

Thank you for your correspondence dated May 10, 2011, and June 24, 2011, regarding sampling and testing waivers associated with the referenced VPDES permit reissuance application. Staff has reviewed Dominion's sampling and testing waiver request and has the following comments.

Waiver Request
Sample results from Outfall 001 adequately characterize the effluent discharged into State waters. Accordingly, Dominion requests that testing requirements for internal Outfalls 101, 103, 104, 105, 107, 108, 109, 110, 112, 113, 114, and 115 be limited to the parameters monitored in the effective VPDES permit and all other monitoring requirements, including the 24-hour composite sampling requirement, be waived.

Staff Response
Staff has no objection to limiting the parameters monitored for internal Outfalls 101, 103, 104, 105, 107, 108, 109, 110, 112, 113, 114, and 115 to those parameters monitored in the effective VPDES permit. The discharge from internal Outfalls 103, 104, 105, 109, 110, 112, and 113 is addressed under Federal Effluent Guidelines established in 40 CFR Part 423 – Steam Electric Power Generating Point Source Category. Monitoring requirements established under this Federal Effluent Guideline are reflected in the effective VPDES permit for these internal outfalls. As such, all monitoring requirements except for those parameters monitored in the effective VPDES permit are waived.

Dominion correspondence states that Outfall 013 serves as an alternate discharge route for internal Outfall 104 and requests that effluent data from Outfall 104 be used for Outfall 013 in the event that a discharge from Outfall 013 is not available. Because Outfall 013 is a direct discharge to Lake Anna, staff objects to monitoring internal Outfall 104 for only those parameters in the effective VPDES permit. As such, Dominion shall monitor internal Outfall 104 in accordance with the requirements of EPA Form 2C.

Staff has no objection to the use of grab sampling in lieu of 24-hour composite sampling for internal Outfalls 101, 103, 104, 105, 107, 108, 109, 110, 112, 113, 114, and 115. As such, the 24-hour composite sampling requirement is waived.

Waiver Request
Dominion requests that the requirement for 24-hour composite sampling be waived for Outfalls 013 and 020.

Staff Response
Staff has no objection to the use of grab sampling in lieu of 24-hour composite sampling for Outfalls 013 and 020. As such, the 24-hour composite sampling requirement is waived for Outfalls 013 and 020.

Waiver Request
Dominion requests that testing requirements for delisted priority pollutants consisting of Bis(Chloromethyl)Ether, Trichlorofluoromethane, and Dichlorodifluoromethane be waived for all sampled outfalls.

Staff Response
In accordance with Guidance Memo 10-2003, sampling and reporting for the delisted priority pollutants consisting of Bis(Chloromethyl)Ether, Trichlorofluoromethane, and Dichlorodifluoromethane is not required. As such, the sampling requirement for these three parameters is waived for all sampled outfalls.

Waiver Request
Dominion requests for all storm water samples that the requirement for flow-weighted composite samples be waived and only grab samples be taken.

Staff Response
Staff has no objection to the use of grab sampling in lieu of flow-weighted composite samples for storm water outfalls. As such, the flow-weighted composite sampling requirement is waived for storm water outfalls.

Waiver Request
Dominion requests that for all sampled outfalls (with the exception of Outfall 111), fecal coliform sampling be waived.

Staff Response
The discharge from all outfalls, with the exception of Outfall 111, is considered industrial in nature. Fecal coliform is not considered a parameter of concern with these industrial discharges. As such, the monitoring for fecal coliform is waived at all outfalls except Outfall 111.

Waiver Request
Dominion requests that sampling for Tributyltin (TBT) be waived.

Staff Response
TBT is a parameter of concern associated with ship maintenance/ship yard facilities. The industrial activities associated with the power plant do not involve ship maintenance/ship yard facilities. As such, the monitoring for TBT is waived.

Sampling Request
Dominion proposes to complete Form 2A, Part A.12 for internal Outfall 111 utilizing existing Discharge Monitoring Report (DMR) data generated from January 2008 – December 2010 and performing a minimum of one sample analysis for any remaining parameters.

Staff Response
EPA Form 2A, Part A.12 requires at a minimum, that effluent testing data be based on at least three samples and be no more than four and one-half years apart. As such, staff has no objection to the sampling proposal for internal Outfall 111.

Sampling Request
Dominion requests that intake samples be representative of Outfall 016.

Staff Response
The existing permit authorizes representative sampling for the intake and Outfall 016. Per the permit, intake data may be submitted to represent Outfall 016. As such, staff has no objection to intake samples being representative of Outfall 016.

Sampling Request
Dominion requests that Outfall 020 samples be representative of Outfall 021.

Staff Response
The existing permit does not authorize representative sampling of Outfall 020 for Outfall 021. Per the permit, intake data may be submitted to represent Outfall 021, not Outfall 020. As such, staff objects to Outfall 020 being representative of Outfall 021.

Sampling Request
Dominion requests that Outfall 104 samples be representative of Outfall 013.

Staff Response
The existing permit authorizes representative sampling for Outfall 104 and Outfall 013. Per the permit, Outfall 104 data may be submitted to represent Outfall 013. As such, staff has no objection to Outfall 104 being representative of Outfall 013. Because Outfall 013 is a direct discharge to Lake Anna, Dominion shall monitor internal Outfall 104 in accordance with the requirements of EPA Form 2C.

Additionally, DEQ requests that Dominion sample Outfall 001 for all GC/MS Fraction – Pesticides found in Part V.C of EPA Form 2C, even if believed absent.

If you have any questions, please contact Susan Mackert at (703) 583-3853 or by email at susan.mackert@deq.virginia.gov.

Respectfully,

Bryant Thomas
Water Permits Manager

cc: VA0052451 – Reissuance File

DOMINION LABORATORY SERVICES

REPORT PRODUCED ON 06/09/2008

AEM TESTING

Location: NORTH ANNA

Submitter: GLENN BISHOP

SL	Sample Date	Description	Time	Parameter	Result
352258	04/09/2008	OUTFALL 001	1000	Arsenic as As, ppb	< 3.
				Antimony as Sb, ppb	< 1.
				Cadmium as Cd, ppb	< 0.3
				Chromium as Cr, ppb	< 1.
				Copper as Cu, ppb	< 1.
				Lead as Pb, ppb	< 1.
				Mercury as Hg, ppb	< 0.2
				Nickel as Ni, ppb	< 5.
				Silver as Ag, ppb	< 0.1
				Selenium as Se, ppb	< 3.
				Thallium as Tl, ppb	< 0.2
				Zinc as Zn, PPM	< 0.010
				Dis. As, ppb	< 3.
				Dis. Sb, ppb	< 1.
				Dis. Cd, ppb	< 0.3
				Dis. Cr, ppb	< 1.
				Dis. Cu, ppb	< 1.
				Dis. Pb, ppb	< 1.
				Dis. Hg, ppb	< 0.2
				Dis. Ni, ppb	< 5.
				Dis. Ag, ppb	< 0.1
				Dis. Se, ppb	< 3.
				Dis. Tl, ppb	< 0.2
				Dis. Zn, PPM	< 0.010
				Cyanide as CN, PPM	< 0.010
				Chrom. +6 as Cr6,PPM	< 0.010
				Gross Alpha, pCi/L	< 1.820
				Gross Beta, pCi/L	2.930
				Strontium-90, pCi/L	< 0.883
				Tritium, pCi/L	3555.00
				Chloride as Cl, PPM	5.14
				Ammonia as N, PPM	0.02
				T-Hard. as CaCO3,PPM	17.10
				Total Xylenes, ppb	< 0.2
				Methyl Chloride, ppb	< 1.10
				Methyl Bromide, ppb	< 1.40
				Vinyl Chloride, ppb	< 1.80
				Chloroethane, ppb	< 1.10
				Methylene Chloride, ppb	< 2.80
				Acrolein, ppb	< 10.00
				Acrylonitrile, ppb	< 1.50
				Trichlorofluoromethane, ppb	< 2.30
				1,1-Dichloroethylene, ppb	< 2.80
				1,1-Dichloroethane, ppb	< 4.70
				1,2-Trans-Dichloroethylene, ppb	< 1.60
				Chloroform, ppb	< 1.60
				1,2-Dichloroethane, ppb	< 2.80
				1,1,1-Trichloroethane, ppb	< 3.80
				Carbon Tetrachloride, ppb	< 2.80
				Dichlorobromomethane, ppb	< 2.20
				1,2-Dichloropropane, ppb	< 6.00
				Cis-1 3-Dichloropropylene, ppb	< 5.00
				Trans-1 3-Dichloropropylene, ppb	< 0.90
				Trichloroethylene, ppb	< 1.90

DOMINION LABORATORY SERVICES

REPORT PRODUCED ON 06/09/2008

AEM TESTING

Location: NORTH ANNA

Submitter: GLENN BISHOP

SL	Sample Date	Description	Time	Parameter	Result
352258	04/09/2008	OUTFALL 001	1000	Chlorodibromomethane, ppb	< 3.10
				Benzene, ppb	< 4.40
				1,1,2-Trichloroethane, ppb	< 5.00
				2-Chloroethylvinyl Ether, ppb	< 1.20
				Bromoform, ppb	< 4.70
				1,1,2,2-Tetrachloroethane, ppb	< 6.90
				Tetrachloroethylene, ppb	< 4.10
				Toluene, ppb	< 6.00
				Chlorobenzene, ppb	< 6.00
				Ethylbenzene, ppb	< 7.20
				Phenol, ppb	< 2.70
				2-Chlorophenol, ppb	< 3.30
				2-Nitrophenol, ppb	< 3.60
				2,4-Dimethylphenol, ppb	< 5.20
				2,4-Dichlorophenol, ppb	< 5.60
				P-Chloro_M-Cresol, ppb	< 7.50
				2,4,6-Trichlorophenol, ppb	< 2.70
				2,4-Dinitrophenol, ppb	< 42.00
				4-Nitrophenol, ppb	< 2.40
				4,6-Dinitro-O-Cresol, ppb	< 24.00
				Pentachlorophenol, ppb	< 3.60
				N-Nitrosodimethylamine, ppb	< 6.20
				Bis(-2-Chloroethyl) ether, ppb	< 5.70
				1,3-Dichlorobenzene, ppb	< 3.10
				1,4-Dichlorobenzene, ppb	< 4.40
				1,2-Dichlorobenzene, ppb	< 4.00
				Bis(2-Chloroisopropyl) ether, ppb	< 5.70
				N-nitroso-Di-n-propylamine, ppb	< 3.60
				Hexachloroethane, ppb	< 2.40
				Nitrobenzene, ppb	< 4.20
				Isophorone, ppb	< 5.10
				Bis(-2-Chloroethoxy) Methane, ppb	< 5.30
				1,2,4-Trichlorobenzene, ppb	< 7.90
				Naphthalene, ppb	< 3.80
				Hexachlorobutadiene, ppb	< 1.80
				Hexachlorocyclopentadiene, ppb	< 10.00
				2-Chloronaphthalene, ppb	< 4.60
				Dimethyl Phthalate, ppb	< 7.50
				Acenaphthylene, ppb	< 3.50
				2,6-Dinitrotoluene, ppb	< 3.40
				Acenaphthene, ppb	< 3.00
				2,4-Dinitrotoluene, ppb	< 5.70
				Diethylphthalate, ppb	< 7.40
				Fluorene, ppb	< 2.20
				4-Chlorophenyl-phenylether, ppb	< 4.20
				N-nitrosodiphenylamine, ppb	< 2.70
				1,2-Diphenylhydrazine, ppb	< 8.80
				4-Bromophenyl-phenylether, ppb	< 3.00
				Alpha BHC, ppb	< 3.10
				Hexachlorobenzene, ppb	< 3.10
				Gamma BHC, ppb	< 2.20
				Beta BHC, ppb	< 4.20
				Phenanthrene, ppb	< 5.40
				Anthracene, ppb	< 1.90

DOMINION LABORATORY SERVICES

REPORT PRODUCED ON 06/09/2008

AEM TESTING

Location: NORTH ANNA

Submitter: GLENN BISHOP

SL	Sample Date	Description	Time	Parameter	Result
352258	04/09/2008	OUTFALL 001	1000	Delta BHC, ppb	< 5.20
				Heptachlor, ppb	< 4.30
				Di-n-Butylphthalate, ppb	< 6.40
				Aldrin, ppb	< 1.90
				Heptachlor epoxide, ppb	< 2.20
				Fluoranthene, ppb	< 2.20
				Benzidine, ppb	< 63.00
				Pyrene, ppb	< 3.80
				Alpha-Endosulfan, ppb	< 61.70
				4,4'-DDE, ppb	< 5.60
				Endrin, ppb	< 5.60
				Dieldrin, ppb	< 4.40
				Endrin aldehyde, ppb	< 65.00
				Beta-Endosulfan, ppb	< 80.30
				Butylbenzylphthalate, ppb	< 2.50
				4,4'-DDD, ppb	< 4.10
				4,4'-DDT, ppb	< 5.10
				Endosulfan sulfate, ppb	< 5.60
				Chrysene, ppb	< 2.50
				3,3'-Dichlorobenzidine, ppb	< 16.50
				Benzo (a) Anthracene, ppb	< 7.80
				Bis(2-ethylhexyl) Phthalate, ppb	< 2.50
				Di-n-octyl Phthalate, ppb	< 2.50
				Benzo (b) fluoranthene, ppb	< 4.80
				Benzo (k) fluoranthene, ppb	< 2.50
				Benzo (a) pyrene, ppb	< 2.50
				Indeno (1 2 3-cd) pyrene, ppb	< 3.70
				Dibenzo (a h) anthracene, ppb	< 2.50
				Benzo (g h i) perylene, ppb	< 4.10
				Chlordane, ppb	< 10.00
				Toxaphene, ppb	< 50.00
				PCB 1221, ppb	< 30.00
				PCB 1232, ppb	< 50.00
				PCB 1016, ppb	< 50.00
				PCB 1242, ppb	< 50.00
				PCB 1254, ppb	< 36.00
				PCB 1248, ppb	< 50.00
				PCB 1260, ppb	< 50.00
				Tributyltin, ng/L	45.
				Hydrogen Sulfide, PPM	< 0.05
				E. Coli, MPN	4.
				1,2 Diphenylhydrazine, ppb	< 0.1
				Arochlor 1016, ppb	< 1.0
				Arochlor 1221, ppb	< 1.0
				Arochlor 1232, ppb	< 1.0
				Arochlor 1242, ppb	< 1.0
				Arochlor 1248, ppb	< 1.0
				Arochlor 1254, ppb	< 1.0
				Arochlor 1260, ppb	< 1.0
				Aldrin, ppb	< 0.016
				Chlordane, ppb	< 0.014
				Dieldrin, ppb	< 0.010
				4,4-DDT, ppb	< 0.017
				4,4-DDE, ppb	< 0.017

DOMINION LABORATORY SERVICES

REPORT PRODUCED ON 06/09/2008

AEM TESTING

Location: NORTH ANNA

Submitter: GLENN BISHOP

SL	Sample Date	Description	Time	Parameter	Result
352258	04/09/2008	OUTFALL 001	1000	4,4-DDD, ppb	< 0.021
				Endosulfan Sulfate, ppb	< 0.009
				Endosulfan I, ppb	< 0.014
				Endosulfan II, ppb	< 0.017
				Endrin, ppb	< 0.020
				Alpha-BHC, ppb	< 0.007
				Beta-BHC, ppb	< 0.013
				Delta-BHC, ppb	< 0.015
				Gamma-BHC (Lindane), ppb	< 0.011
				Heptachlor, ppb	< 0.016
				Kepone, ppb	< 0.015
				Methoxychlor, ppb	< 0.017
				Mirex, ppb	< 0.015
				Endrin Aldehyde, ppb	< 0.019
				Heptachlor Epoxide, ppb	< 0.012
				Toxaphene, ppb	< 0.057
				Chlorpyrifos, ppb	< 0.0138
				Demeton, ppb	< 0.5206
				Guthion, ppb	< 0.3577
				Malathion, ppb	< 0.1227
				Parathion, ppb	< 0.1210
				Total Residual Chlorine, PPM	< 0.10
352259	04/09/2008	INTAKE	1055	Arsenic as As, ppb	< 3.
				Antimony as Sb, ppb	< 1.
				Cadmium as Cd, ppb	< 0.3
				Chromium as Cr, ppb	< 1.
				Copper as Cu, ppb	1.
				Lead as Pb, ppb	< 1.
				Mercury as Hg, ppb	< 0.2
				Nickel as Ni, ppb	< 5.
				Silver as Ag, ppb	< 0.1
				Selenium as Se, ppb	< 3.
				Thallium as Tl, ppb	< 0.2
				Zinc as Zn, PPM	< 0.010
				Dis. As, ppb	< 3.
				Dis. Sb, ppb	< 1.
				Dis. Cd, ppb	< 0.3
				Dis. Cr, ppb	< 1.
				Dis. Cu, ppb	< 1.
				Dis. Pb, ppb	< 1.
				Dis. Hg, ppb	< 0.2
				Dis. Ni, ppb	< 5.
				Dis. Ag, ppb	< 0.1
				Dis. Se, ppb	< 3.
				Dis. Tl, ppb	< 0.2
				Dis. Zn, PPM	< 0.010
				Chrom. +6 as Cr6,PPM	< 0.010
				T-Hard. as CaCO3,PPM	17.10

DOMINION LABORATORY SERVICES

REPORT PRODUCED ON 06/09/2008

AEM TESTING

Location: NORTH ANNA

Submitter: GLENN BISHOP

SL	Sample Date	Description	Time	Parameter	Result
352260	04/09/2008	FIELD BLANK	955	Arsenic as As, ppb	< 3.
				Antimony as Sb, ppb	< 1.
				Cadmium as Cd, ppb	< 0.3
				Chromium as Cr, ppb	< 1.
				Copper as Cu, ppb	< 1.
				Lead as Pb, ppb	< 1.
				Mercury as Hg, ppb	< 0.2
				Nickel as Ni, ppb	< 5.
				Silver as Ag, ppb	< 0.1
				Selenium as Se, ppb	< 3.
				Thallium as Tl, ppb	< 0.2
				Zinc as Zn, PPM	< 0.010
352261	04/09/2008	EQUIP BLANK	957	Arsenic as As, ppb	< 3.
				Antimony as Sb, ppb	< 1.
				Cadmium as Cd, ppb	< 0.3
				Chromium as Cr, ppb	< 1.
				Copper as Cu, ppb	< 1.
				Lead as Pb, ppb	< 1.
				Mercury as Hg, ppb	< 0.2
				Nickel as Ni, ppb	< 5.
				Silver as Ag, ppb	< 0.1
				Selenium as Se, ppb	< 3.
				Thallium as Tl, ppb	< 0.2
				Zinc as Zn, PPM	< 0.010

DOMINION LABORATORY SERVICES

REPORT PRODUCED ON 06/21/2011

AEM TOXICITY TESTING - METALS ONLY

Location: NORTH ANNA

Submitter: GLENN BISHOP

Dominion Lab #: 364171

Description: OUTFALL 001

Sample Date: 04/20/2009

Time: 1110

Parameter	Result
Arsenic as As, ppb	< 3.
Cadmium as Cd, ppb	< 0.3
Chromium as Cr, ppb	< 1.
Copper as Cu, ppb	5.
Lead as Pb, ppb	< 1.
Mercury as Hg, ppb	< 0.2
Nickel as Ni, ppb	< 5.
Silver as Ag, ppb	< 0.1
Antimony as Sb, ppb	< 1.
Selenium as Se, ppb	< 3.
Thallium as Tl, ppb	< 0.2
Zinc as Zn, PPM	< 0.010
Dis. As, ppb	< 3.
Dis. Cd, ppb	< 0.3
Dis. Cr, ppb	< 1.
Dis. Cu, ppb	2.
Dis. Pb, ppb	< 1.
Dis. Hg, ppb	< 0.2
Dis. Ni, ppb	< 5.
Dis. Ag, ppb	< 0.1
Dis. Sb, ppb	< 1.
Dis. Se, ppb	< 3.
Dis. Tl, ppb	< 0.2
Dis. Zn, PPM	< 0.010
Methyl Chloride, ppb	< 1.10
Methyl Bromide, ppb	< 1.40
Vinyl Chloride, ppb	< 1.80
Chloroethane, ppb	< 1.10
Methylene Chloride, ppb	< 2.80
Acrolein, ppb	< 10.00
Acrylonitrile, ppb	< 1.50
Trichlorofluoromethane, ppb	< 2.30
1,1-Dichloroethylene, ppb	< 2.80
1,1-Dichloroethane, ppb	< 4.70
1,2-Trans-Dichloroethylene, ppb	< 1.60
Chloroform, ppb	< 1.60
1,2-Dichloroethane, ppb	< 2.80
1,1,1-Trichloroethane, ppb	< 3.80
Carbon Tetrachloride, ppb	< 2.80
Dichlorobromomethane, ppb	< 2.20
1,2-Dichloropropane, ppb	< 6.00
Cis-1 3-Dichloropropylene, ppb	< 5.00
Trans-1 3-Dichloropropylene, ppb	< 0.90
Trichloroethylene, ppb	< 1.90
Chlorodibromomethane, ppb	< 3.10
Benzene, ppb	< 4.40
1,1,2-Trichloroethane, ppb	< 5.00
2-Chloroethylvinyl Ether, ppb	< 1.20
Bromoform, ppb	< 1.40
1,1,2,2-Tetrachloroethane, ppb	< 6.90
Tetrachloroethylene, ppb	< 4.10
Toluene, ppb	< 6.00
Chlorobenzene, ppb	< 6.00
Ethylbenzene, ppb	< 7.20
Phenol, ppb	< 2.70
2-Chlorophenol, ppb	< 3.30
2-Nitrophenol, ppb	< 3.60
2,4-Dimethylphenol, ppb	< 5.20
2,4-Dichlorophenol, ppb	< 5.60
P-Chloro_M-Cresol, ppb	< 7.50

DOMINION LABORATORY SERVICES

REPORT PRODUCED ON 06/21/2011

AEM TOXICITY TESTING - METALS ONLY

Location: NORTH ANNA

Submitter: GLENN BISHOP

Dominion Lab #: 364171

Description: OUTFALL 001

Sample Date: 04/20/2009

Time: 1110

Parameter	Result
2,4,6-Trichlorophenol, ppb	< 2.50
2,4-Dinitrophenol, ppb	< 42.00
4-Nitrophenol, ppb	< 2.40
4,6-Dinitro-O-Cresol, ppb	< 24.00
Pentachlorophenol, ppb	< 3.60
Total Xylenes, ppb	< 0.2
Ammonia as N, PPM	0.03
Chrom. +6 as Cr6,PPM	< 0.010
T-Hard. as CaCO3,PPM	17.10
Chloride as Cl, PPM	5.05
Gross Alpha, pCi/L	< 1.580
Gross Beta, pCi/L	2.390
Strontium-90, pCi/L	< 1.350
Tritium, pCi/L	5022.00
N-Nitrosodimethylamine, ppb	< 6.20
Bis(-2-Chloroethyl) ether, ppb	< 5.70
1,3-Dichlorobenzene, ppb	< 3.10
1,4-Dichlorobenzene, ppb	< 4.40
1,2-Dichlorobenzene, ppb	< 4.00
Bis(2-Chloroisopropyl) ether, ppb	< 5.70
N-nitroso-Di-n-propylamine, ppb	< 3.60
Hexachloroethane, ppb	< 2.40
Nitrobenzene, ppb	< 4.20
Isophorone, ppb	< 5.10
Bis(-2-Chloroethoxy) Methane, ppb	< 5.30
1,2,4-Trichlorobenzene, ppb	< 7.90
Naphthalene, ppb	< 3.80
Hexachlorobutadiene, ppb	< 1.80
Hexachlorocyclopentadiene, ppb	< 10.00
2-Chloronaphthalene, ppb	< 4.60
Dimethyl Phthalate, ppb	< 7.50
Acenaphthylene, ppb	< 3.50
2,6-Dinitrotoluene, ppb	< 3.40
Acenaphthene, ppb	< 3.00
2,4-Dinitrotoluene, ppb	< 5.70
Diethylphthalate, ppb	< 7.40
Fluorene, ppb	< 2.20
4-Chlorophenyl-phenylether, ppb	< 4.20
N-nitrosodiphenylamine, ppb	< 2.70
1,2-Diphenylhydrazine, ppb	< 8.80
4-Bromophenyl-phenylether, ppb	< 3.00
Hexachlorobenzene, ppb	< 3.10
Phenanthrene, ppb	< 5.40
Anthracene, ppb	< 1.90
Di-n-Butylphthalate, ppb	< 6.40
Fluoranthene, ppb	< 2.20
Benzidine, ppb	< 63.00
Pyrene, ppb	< 3.80
Butylbenzylphthalate, ppb	< 2.50
Chrysene, ppb	< 2.50
3,3'-Dichlorobenzidine, ppb	< 16.50
Benzo (a) Anthracene, ppb	< 7.80
Bis(2-ethylhexyl) Phthalate, ppb	< 2.50
Di-n-octyl Phthalate, ppb	< 2.50
Benzo (b) fluoranthene, ppb	< 4.80
Benzo (k) fluoranthene, ppb	< 2.50
Benzo (a) pyrene, ppb	< 2.50
Indeno (1 2 3-cd) pyrene, ppb	< 3.70
Dibenzo (a h) anthracene, ppb	< 2.50
Benzo (g h i) perylene, ppb	< 4.10

DOMINION LABORATORY SERVICES

REPORT PRODUCED ON 06/21/2011

AEM TOXICITY TESTING - METALS ONLY

Location: NORTH ANNA

Submitter: GLENN BISHOP

Dominion Lab #: 364171

Description: OUTFALL 001

Sample Date: 04/20/2009

Time: 1110

Parameter	Result
TSS, PPM	1.4
Cyanide as CN, PPM	< 0.010
Tributyltin, ng/L	< 30.
Hydrogen Sulfide, PPM	< 0.05
E. Coli, MPN	< 2.
Aldrin, ppb	< 0.050
Chlordane, ppb	< 0.200
Dieldrin, ppb	< 0.100
4,4-DDT, ppb	< 0.100
4,4-DDE, ppb	< 0.100
4,4-DDD, ppb	< 0.100
Endosulfan Sulfate, ppb	< 0.100
Endosulfan I, ppb	< 0.100
Endosulfan II, ppb	< 0.100
Endrin, ppb	< 0.100
Alpha-BHC, ppb	< 0.100
Beta-BHC, ppb	< 0.050
Delta-BHC, ppb	< 0.100
Gamma-BHC (Lindane), ppb	< 0.050
Heptachlor, ppb	< 0.050
Kepone, ppb	< 0.050
Methoxychlor, ppb	< 0.050
Mirex, ppb	< 0.050
Endrin Aldehyde, ppb	< 0.050
Heptachlor Epoxide, ppb	< 0.050
Toxaphene, ppb	< 5.000
Chlorpyrifos, ppb	< 0.2000
Demeton, ppb	< 1.0000
Guthion, ppb	< 1.0000
Malathion, ppb	< 1.0000
Parathion, ppb	< 1.0000
1,2 Diphenylhydrazine, ppb	< 0.1
Arochlor 1016, ppb	< 1.0
Arochlor 1221, ppb	< 1.0
Arochlor 1232, ppb	< 1.0
Arochlor 1242, ppb	< 1.0
Arochlor 1248, ppb	< 1.0
Arochlor 1254, ppb	< 1.0
Arochlor 1260, ppb	< 1.0
Total Residual Chlorine, PPM	< 0.10

DOMINION LABORATORY SERVICES

REPORT PRODUCED ON 06/21/2011

AEM TOXICITY TESTING - QC SAMPLES

Location: NORTH ANNA

Submitter: GLENN BISHOP

Dominion Lab #: 364172

Description: EQUIP BLANK

Sample Date: 04/20/2009

Time: 1100

Parameter	Result
Arsenic as As, ppb	< 3.
Cadmium as Cd, ppb	< 0.3
Chromium as Cr, ppb	< 1.
Copper as Cu, ppb	2.
Lead as Pb, ppb	< 1.
Mercury as Hg, ppb	< 0.2
Nickel as Ni, ppb	< 5.
Silver as Ag, ppb	< 0.1
Antimony as Sb, ppb	< 1.
Selenium as Se, ppb	< 3.
Zinc as Zn, PPM	< 0.010
Thallium as Tl, ppb	< 0.2

DOMINION LABORATORY SERVICES

REPORT PRODUCED ON 06/03/2010

AEM TOXICITY TESTING - METALS ONLY

Location: NORTH ANNA

Submitter: GLENN BISHOP

Dominion Lab #: 375459

Sample Date: 04/05/2010

Description: OUTFALL 001

Time: 1000

Parameter	Result
Arochlor 1016, ppb	< 1.0
Arochlor 1221, ppb	< 1.0
Arochlor 1232, ppb	< 1.0
Arochlor 1242, ppb	< 1.0
Arochlor 1248, ppb	< 1.0
Arochlor 1254, ppb	< 1.0
Arochlor 1260, ppb	< 1.0
T-Hard. as CaCO3, PPM	11.97
Arsenic as As, ppb	< 3.
Cadmium as Cd, ppb	< 0.3
Chromium as Cr, ppb	< 1.
Copper as Cu, ppb	2.
Lead as Pb, ppb	< 1.
Mercury as Hg, ppb	< 0.2
Nickel as Ni, ppb	< 5.
Silver as Ag, ppb	< 0.1
Antimony as Sb, ppb	< 1.
Selenium as Se, ppb	< 3.
Thallium as Tl, ppb	< 0.2
Zinc as Zn, PPM	< 0.010
Dis. As, ppb	< 3.
Dis. Cd, ppb	< 0.3
Dis. Cr, ppb	< 1.
Dis. Cu, ppb	2.
Dis. Pb, ppb	< 1.
Dis. Hg, ppb	< 0.2
Dis. Ni, ppb	< 5.
Dis. Ag, ppb	< 0.1
Dis. Sb, ppb	< 1.
Dis. Se, ppb	< 3.
Dis. Tl, ppb	< 0.2
Dis. Zn, PPM	< 0.010
Methyl Chloride, ppb	< 5.00
Methyl Bromide, ppb	< 10.00
Vinyl Chloride, ppb	< 10.00
Chloroethane, ppb	< 10.00
Methylene Chloride, ppb	< 2.80
Acrolein, ppb	< 100.00
Acrylonitrile, ppb	< 100.00
Trichlorofluoromethane, ppb	< 10.00
1,1-Dichloroethylene, ppb	< 2.80
1,1-Dichloroethane, ppb	< 4.70
1,2-Trans-Dichloroethylene, ppb	< 1.60
Chloroform, ppb	< 1.60
1,2-Dichloroethane, ppb	< 2.80
1,1,1-Trichloroethane, ppb	< 3.80
Carbon Tetrachloride, ppb	< 2.80
Dichlorobromomethane, ppb	< 2.20
1,2-Dichloropropane, ppb	< 6.00
Cis-1 3-Dichloropropylene, ppb	< 5.00
Trans-1 3-Dichloropropylene, ppb	< 5.00
Trichloroethylene, ppb	< 1.90
Chlorodibromomethane, ppb	< 3.10
Benzene, ppb	< 4.40
1,1,2-Trichloroethane, ppb	< 5.00
2-Chloroethylvinyl Ether, ppb	< 10.00
Bromoform, ppb	< 4.70
1,1,2,2-Tetrachloroethane, ppb	< 6.90
Tetrachloroethylene, ppb	< 4.10
Toluene, ppb	< 6.00

DOMINION LABORATORY SERVICES

REPORT PRODUCED ON 06/03/2010

AEM TOXICITY TESTING - METALS ONLY

Location: NORTH ANNA

Submitter: GLENN BISHOP

Dominion Lab #: 375459

Description: OUTFALL 001

Sample Date: 04/05/2010

Time: 1000

Parameter	Result
Chlorobenzene, ppb	< 6.00
Ethylbenzene, ppb	< 7.20
Total Xylenes, ppb	< 0.2
Ammonia as N, PPM	0.03
Chloride as Cl, PPM	4.88
Phenol, ppb	< 2.70
2-Chlorophenol, ppb	< 3.30
2-Nitrophenol, ppb	< 3.60
2,4-Dimethylphenol, ppb	< 5.20
2,4-Dichlorophenol, ppb	< 5.60
4-Chloro-3-Methylphenol, ppb	< 7.50
2,4,6-Trichlorophenol, ppb	< 2.70
2,4-Dinitrophenol, ppb	< 42.00
4-Nitrophenol, ppb	< 2.40
2-Methyl-4,6-Dinitrophenol, ppb	< 24.00
Pentachlorophenol, ppb	< 3.60
Chrom. +6 as Cr6,PPM	< 0.005
Cyanide as CN, PPM	< 0.010
Tributyltin, ng/L	< 30.
Hydrogen Sulfide, PPM	< 0.05
E. Coli, MPN	144.
Aldrin, ppb	< 0.050
Chlordane, ppb	< 0.200
Dieldrin, ppb	< 0.100
4,4-DDT, ppb	< 0.100
4,4-DDE, ppb	< 0.100
4,4-DDD, ppb	< 0.100
Endosulfan Sulfate, ppb	< 0.100
Endosulfan I, ppb	< 0.100
Endosulfan II, ppb	< 0.100
Endrin, ppb	< 0.100
Alpha-BHC, ppb	< 0.050
Beta-BHC, ppb	< 0.050
Delta-BHC, ppb	< 0.050
Gamma-BHC (Lindane), ppb	< 0.050
Heptachlor, ppb	< 0.100
Kepone, ppb	< 0.100
Methoxychlor, ppb	< 0.100
Mirex, ppb	< 0.100
Endrin Aldehyde, ppb	< 0.100
Heptachlor Epoxide, ppb	< 0.100
Toxaphene, ppb	< 5.000
Chlorpyrifos, ppb	< 0.2000
Demeton, ppb	< 1.0000
Guthion, ppb	< 1.0000
Malathion, ppb	< 1.0000
Parathion, ppb	< 1.0000
1,2 Diphenylhydrazine, ppb	< 0.1
Gross Alpha, pCi/L	< 1.090
Gross Beta, pCi/L	< 1.540
Strontium-90, pCi/L	1.550
Tritium, pCi/L	5325.00
Total Residual Chlorine, PPM	< 0.10
N-Nitrosodimethylamine, ppb	< 6.20
Bis(-2-Chloroethyl) ether, ppb	< 5.70
1,3-Dichlorobenzene, ppb	< 3.10
1,4-Dichlorobenzene, ppb	< 4.40
1,2-Dichlorobenzene, ppb	< 4.00
Bis(2-Chloroisopropyl) ether, ppb	< 5.70
N-nitroso-Di-n-propylamine, ppb	< 3.60

DOMINION LABORATORY SERVICES

REPORT PRODUCED ON 06/03/2010

AEM TOXICITY TESTING - METALS ONLY

Location: NORTH ANNA

Submitter: GLENN BISHOP

Dominion Lab #: 375459

Sample Date: 04/05/2010

Description: OUTFALL 001

Time: 1000

Parameter	Result
Hexachloroethane, ppb	< 2.40
Nitrobenzene, ppb	< 4.20
Isophorone, ppb	< 5.10
Bis(-2-Chloroethoxy) Methane, ppb	< 5.30
1,2,4-Trichlorobenzene, ppb	< 7.90
Naphthalene, ppb	< 3.80
Hexachlorobutadiene, ppb	< 1.80
Hexachlorocyclopentadiene, ppb	< 10.00
2-Chloronaphthalene, ppb	< 4.60
Dimethyl Phthalate, ppb	< 7.50
Acenaphthylene, ppb	< 3.50
2,6-Dinitrotoluene, ppb	< 3.40
Acenaphthene, ppb	< 3.00
2,4-Dinitrotoluene, ppb	< 5.70
Diethylphthalate, ppb	< 7.40
Fluorene, ppb	< 2.20
4-Chlorophenyl-phenylether, ppb	< 4.20
N-nitrosodiphenylamine, ppb	< 2.70
4-Bromophenyl-phenylether, ppb	< 3.00
Hexachlorobenzene, ppb	< 3.10
Phenanthrene, ppb	< 5.40
Anthracene, ppb	< 1.90
Di-n-Butylphthalate, ppb	< 6.40
Fluoranthene, ppb	< 2.20
Benzidine, ppb	< 63.00
Pyrene, ppb	< 3.80
Butylbenzylphthalate, ppb	< 2.50
Chrysene, ppb	< 2.50
3,3'-Dichlorobenzidine, ppb	< 16.50
Benzo (a) Anthracene, ppb	< 7.80
Bis(2-ethylhexyl) Phthalate, ppb	< 2.50
Di-n-octyl Phthalate, ppb	< 2.50
Benzo (b) fluoranthene, ppb	< 4.80
Benzo (k) fluoranthene, ppb	< 2.50
Benzo (a) pyrene, ppb	< 2.50
Indeno (1 2 3-cd) pyrene, ppb	< 3.70
Dibenzo (a h) anthracene, ppb	< 2.50
Benzo (g h i) perylene, ppb	< 4.10

DOMINION LABORATORY SERVICES

REPORT PRODUCED ON 06/03/2010

AEM TOXICITY TESTING - QC SAMPLES

Location: NORTH ANNA

Submitter: GLENN BISHOP

Dominion Lab #: 375460

Sample Date: 04/05/2010

Description: EQUIP BLANK

Time: 955

Parameter	Result
Arsenic as As, ppb	< 3.
Cadmium as Cd, ppb	< 0.3
Chromium as Cr, ppb	< 1.
Copper as Cu, ppb	< 1.
Lead as Pb, ppb	< 1.
Mercury as Hg, ppb	< 0.2
Nickel as Ni, ppb	< 5.
Silver as Ag, ppb	< 0.1
Antimony as Sb, ppb	< 1.
Selenium as Se, ppb	< 3.
Thallium as Tl, ppb	< 0.2
Zinc as Zn, PPM	< 0.010

Samples rec'd on ice
2.6°C

416308

Location: North Anna	Requested by: GLENN BISHOP - N4	Priority:	
Required Date: 6/5/10	Phone:	Date Analysis Complete:	5/11/10
Comment:	Sampled by: WIB	Date Approved Released:	6/3/10

Bottle Types: C=Cyanide, FC=Fecal coliform, O/G=Oil and Grease, PT=Phenols Total, V=Volatiles, M=Metals, A=[Ammonia,TKN,TP,COD], BOD=Biological Oxygen Demand, R=Radioactivity
SUL=Sulfide, SUR=Surfactants, TOC=Total Organic Carbon, TSS=[Total Suspended Solids,BR,B,F,NO_3/NO_2,SO_4,Color,~~TDS,Chloride~~]
ABN=Acid Base Neutrals, PP=Pesticide/PCBs, D=Dioxin

Preservatives: HCl=Hydrochloric acid, CS=Cu Sulfate, S=Sulfuric acid, N=Nitric acid, ZA=Zinc acetate, SH=Sodium Hydroxide

Tests Required 1= [Volatiles, Total xylenes], Ammonia, Chlorides
2= ABN
3= TR and Diss Metals Sb,As,Cd,Cr3,Cu,Pb,Hg,Ni,Se,Ag,Tl,Zn, Hardness

Bottles
pH<2 or >9
√

X - PLACE AN "X" IN THE BOX FOR SAMPLES TO BE SUBMITTED

System Lab Number	x	Sample ID	Sample Date	Sample Time	Comp	Grab	Cl_2 Screen [Cn,NH3, ABN,Vol]	Sulfide Screen [Cn]	C	FC	O/G	PT	V	M	A	BOD	R	SUL	SUR	TOC	TSS	ABN	P/P	D	Test Required	Notes
Preservative											HCl	CS,S	HCl	N	S		N	ZA,SH		HCl						
375459		Outfall 001	4/5/10	1000		x							6	2	1						1	3			1,2,3	TRC = <QL. AEM-Metal
		~~Intake~~				~~x~~								~~2~~											~~2~~	
375460		Equip blank	4/5/10	9:55		x								1											3	No hardness or Cr6 AEM-Metal QC

Relinquished by: (Signature) CJT	Date 4/5/10 Time 1322	Received by: (Signature)	Date 4.5.10 Time 1322
Relinquished by: (Signature)	Date Time	Received by: (Signature)	Date Time

coc AppB NAnna 001.xls

Primary Laboratories, Inc.

7423 Lee Davis Road • Mechanicsville, VA 23111 • Telephone (804) 559-9004 • Fax (804) 559-9306

ANALYTICAL LABORATORY REPORT

16-Apr-10

Dominion Laboratory Services
Attn: Dave Yaworsky
11201 Old Stage Road
Chester, Virginia 23836

Date Received:	13-Apr-10
Units of Measure:	ug/L
Method Numbers*:	EPA 624
Date Analyzed:	14-Apr-10
Technician:	PB
Date Sampled:	5-Apr-10
Work Order No:	1004106-01
Client ID:	**375459 NA001**

Test Description	Final Result	Reporting Limit
Acrolein	<100.0	100.0
Acrylonitrile	<100.0	100.0
Benzene	<4.4	4.4
Bromodichloromethane	<2.2	2.2
Bromoform	<4.7	4.7
Bromomethane	<10.0	10.0
Carbon tetrachloride	<2.8	2.8
Chlorobenzene	<6.0	6.0
Chloroethane	<10.0	10.0
2-Chloroethylvinyl ether	<10.0	10.0
Chloroform	<1.6	1.6
Chloromethane	<5.0	5.0
Dibromochloromethane	<3.1	3.1
1,2-Dichlorobenzene	<5.0	5.0
1,3-Dichlorobenzene	<5.0	5.0
1,4-Dichlorobenzene	<5.0	5.0
1,1-Dichloroethane	<4.7	4.7
1,2-Dichloroethane	<2.8	2.8
1,1-Dichloroethene	<2.8	2.8
trans-1,2-Dichloroethene	<1.6	1.6
1,2-Dichloropropane	<6.0	6.0
cis-1,3-Dichloropropene	<5.0	5.0
trans-1,3-Dichloropropene	<5.0	5.0

Primary Laboratories, Inc.
Results

16-Apr-10

Units of Measure:	ug/L
Method Numbers*:	EPA 624 (con't)
Date Analyzed:	14-Apr-10
Technician:	PB
Date Sampled:	5-Apr-10
Work Order No:	1004106-01
Client ID:	**375459 NA001**

Test Description	Final Result	Reporting Limit
Ethylbenzene	<7.2	7.2
Methylene Chloride	<2.8	2.8
1,1,2,2-Tetrachloroethane	<6.9	6.9
Tetrachloroethene	<4.1	4.1
Toluene	<6.0	6.0
1,1,1-Trichloroethane	<3.8	3.8
1,1,2-Trichloroethane	<5.0	5.0
Trichloroethene	<1.9	1.9
Trichlorofluoromethane	<10.0	10.0
Vinyl Chloride	<10.0	10.0

* All methods are Standard Methods 18th Edition unless otherwise noted.

Signature: _____ Date: 4/16/10

Parry V. Bragg
Laboratory Manager

These analytical results are based upon materials provided by the client and are intended for the exclusive use of the client. These analytical results represent the best judgement of Primary Laboratories, Inc. Primary Laboratories, Inc. assumes no responsibility, express or implied, as to the interpretation of the analytical results contained in this report. This report is not to be reproduced except with the written approval of Primary Laboratories, Inc.

Primary Laboratories, Inc.

7423 Lee Davis Road • Mechanicsville, VA 23111 • Telephone (804) 559-9004 • Fax (804) 559-9306

ANALYTICAL LABORATORY REPORT

22-Apr-10

Dominion Virginia Power
Attn: Glenn Bishop
4111 Castlewood Road
Richmond, Va. 23234

Date Received: 5-Apr-10
Date Sampled: 5-Apr-10
Work Order No: 1004020-01
Client ID: **North Anna Outfall 001**

Test Description	Final Result	Reporting Limit	Units of Measure	Method Numbers*	Date Analyzed	Tech. Initials
Hexavalent Chromium	<0.005	0.005	mg/L	3500	5-Apr-10	NA
1,2 Diphenylhydrazine	<0.1	0.1	ug/L	526	6-Apr-10	HV
Cyanide	<0.01	0.01	mg/L	4500CN E	7-Apr-10	HV
Tributyltin	<30	30	ng/L	GC/FPD	14-Apr-10	SC**
Hydrogen Sulfide	<0.050	0.050	mg/L	376.1	12-Apr-10	HV
E Coli	143.9	1.0	MPN/100ml	9223 B	5-Apr-10	HV

** Analysis sub-contracted.

Primary Laboratories, Inc.
Results

22-Apr-10

Date Sampled: 5-Apr-10
Work Order No: 1004020-01
Client ID: **North Anna Outfall 001**

Test Description	Final Result	Reporting Limit	Units of Measure	Method Numbers*	Date Analyzed	Tech. Initials
Pesticides						
Aldrin	<0.05	0.05	ug/L	EPA 608	6-Apr-10	HV
Chlordane	<0.20	0.20	ug/L	EPA 608	6-Apr-10	HV
Dieldrin	<0.10	0.10	ug/L	EPA 608	6-Apr-10	HV
4,4-DDT	<0.10	0.10	ug/L	EPA 608	6-Apr-10	HV
4,4-DDE	<0.10	0.10	ug/L	EPA 608	6-Apr-10	HV
4,4-DDD	<0.10	0.10	ug/L	EPA 608	6-Apr-10	HV
Endosulfan sulfate	<0.10	0.10	ug/L	EPA 608	6-Apr-10	HV
Endosulfan I	<0.10	0.10	ug/L	EPA 608	6-Apr-10	HV
Endosulfan II	<0.10	0.10	ug/L	EPA 608	6-Apr-10	HV
Endrin	<0.10	0.10	ug/L	EPA 608	6-Apr-10	HV
Alpha-BHC	<0.05	0.05	ug/L	EPA 608	6-Apr-10	HV
Beta-BHC	<0.05	0.05	ug/L	EPA 608	6-Apr-10	HV
Delta-BHC	<0.05	0.05	ug/L	EPA 608	6-Apr-10	HV
Gamma-BHC (Lindane)	<0.05	0.05	ug/L	EPA 608	6-Apr-10	HV
Heptachlor	<0.10	0.10	ug/L	EPA 608	6-Apr-10	HV
Kepone	<0.10	0.10	ug/L	EPA 608	6-Apr-10	HV
Methoxychlor	<0.10	0.10	ug/L	EPA 608	6-Apr-10	HV
Mirex	<0.10	0.10	ug/L	EPA 608	6-Apr-10	HV
Endrin Aldehyde	<0.10	0.10	ug/L	EPA 608	6-Apr-10	HV
Heptachlor Epoxide	<0.10	0.10	ug/L	EPA 608	6-Apr-10	HV
PCB-1221	<1.0	1.0	ug/L	EPA 608	6-Apr-10	HV
PCB-1232	<1.0	1.0	ug/L	EPA 608	6-Apr-10	HV
PCB-1242	<1.0	1.0	ug/L	EPA 608	6-Apr-10	HV
PCB-1016	<1.0	1.0	ug/L	EPA 608	6-Apr-10	HV
PCB-1248	<1.0	1.0	ug/L	EPA 608	6-Apr-10	HV
PCB-1254	<1.0	1.0	ug/L	EPA 608	6-Apr-10	HV
PCB-1260	<1.0	1.0	ug/L	EPA 608	6-Apr-10	HV
Toxaphene	<5.0	5.0	ug/L	EPA 608	6-Apr-10	HV

60/64

Primary Laboratories, Inc.
Results

22-Apr-10

Date Sampled: 9-Apr-08
Work Order No: 0804077-01
Client ID: **North Anna 001**

Test Description	Final Result	Reporting Limit	Units of Measure	Method Numbers*	Date Analyzed	Tech. Initials
Organophosphorus Pesticides						
Demeton	<1	1	ug/L	EPA 622	18-Apr-10	SC**
Malathion	<1	1	ug/L	EPA 622	18-Apr-10	SC**
Chlorpyrifos	<0.2	0.2	ug/L	EPA 622	18-Apr-10	SC**
Parathion	<1	1	ug/L	EPA 622	18-Apr-10	SC**
Guthion	<1	1	ug/L	EPA 622	18-Apr-10	SC**

Test
ORG Pltes

* All methods are Standard Methods 18th Edition unless otherwise noted.

** Analysis sub-contracted.

Signature: Parry L. Bragg Date: 4/22/10
Parry L. Bragg
Laboratory Manager

These analytical results are based upon materials provided by the client and are intended for the exclusive use of the client. These analytical results represent the best judgement of Primary Laboratories, Inc. Primary Laboratories, Inc. assumes no responsibility, express or implied, as to the interpretation of the analytical results contained in this report. This report is not to be reproduced except with the written approval of Primary Laboratories, Inc.

Pace Analytical®
www.pacelabs.com

Pace Analytical Services, Inc.
1638 Roseytown Road - Suites 2,3,4
Greensburg, PA 15601
(724)850-5600

April 21, 2010

Mr. Glenn Bishop
Dominion Environmental Biology
4111 Castlewood Road
Richmond, VA 23234

RE: Project: North Anna Outfall 001
Pace Project No.: 3025617

Dear Mr. Bishop:
Enclosed are the analytical results for sample(s) received by the laboratory on April 06, 2010. The results relate only to the samples included in this report. Results reported herein conform to the most current NELAC standards, where applicable, unless otherwise narrated in the body of the report.

If you have any questions concerning this report, please feel free to contact me.

Sincerely,

Jacquelyn Collins

jacquelyn.collins@pacelabs.com
Project Manager

Enclosures

This report shall not be reproduced, except in full,
without the written consent of Pace Analytical Services, Inc..

Pace Analytical®
www.pacelabs.com

Pace Analytical Services, Inc.
1638 Roseytown Road - Suites 2,3,4
Greensburg, PA 15601
(724)850-5600

CERTIFICATIONS

Project: North Anna Outfall 001
Pace Project No.: 3025617

Pennsylvania Certification IDs
1638 Roseytown Road Suites 2,3&4 Greensburg, PA 15601
Wyoming Certification #: 8TMS-Q
Wisconsin/PADEP Certification
West Virginia Certification #: 143
Washington Certification #: C1941
Virginia Certification #: 00112
Virgin Island/PADEP Certification
Utah/NELAC Certification #: ANTE
Texas/NELAC Certification #: T104704188-09 TX
Tennessee Certification #: TN2867
South Dakota Certification
Puerto Rico Certification #: PA01457
Pennsylvania/NELAC Certification #: 0065-282
Oregon/NELAC Certification #: PA200002
North Carolina Certification #: 42706
New York/NELAC Certification #: 10888
New Mexico Certification
New Jersey/NELAC Certification #: PA 051
New Hampshire/NELAC Certification #: 2976
Nevada Certification
Montana Certification #: Cert 0082
Missouri Certification #: 235
Michigan/PADEP Certification
Massachusetts Certification #: M-PA1457
Maryland Certification #: 308
Maine Certification #: PA0091
Louisiana/NELAC Certification #: LA080002
Louisiana/NELAC Certification #: 4086
Kentucky Certification #: 90133
Kansas/NELAC Certification #: E-10358
Iowa Certification #: 391
Indiana/PADEP Certification
Illinois/PADEP Certification
Idaho Certification
Hawaii/PADEP Certification
Guam/PADEP Certification
Georgia Certification #: 968
Florida/NELAC Certification #: E87683
Delaware Certification
Connecticut Certification #: PH 0694
Colorado Certification
California/NELAC Certification #: 04222CA
Arkansas Certification
Arizona Certification #: AZ0734
Alabama Certification #: 41590

This report shall not be reproduced, except in full,
without the written consent of Pace Analytical Services, Inc..

Pace Analytical Services, Inc.
1638 Roseytown Road - Suites 2,3,4
Greensburg, PA 15601
(724)850-5600

SAMPLE SUMMARY

Project: North Anna Outfall 001
Pace Project No.: 3025617

Lab ID	Sample ID	Matrix	Date Collected	Date Received
3025617001	**North Anna Outfall 001**	Water	04/05/10 10:00	04/06/10 10:00

This report shall not be reproduced, except in full,
without the written consent of Pace Analytical Services, Inc..

Pace Analytical Services, Inc.
1638 Roseytown Road - Suites 2,3,4
Greensburg, PA 15601
(724)850-5600

SAMPLE ANALYTE COUNT

Project: North Anna Outfall 001
Pace Project No.: 3025617

Lab ID	Sample ID	Method	Analysts	Analytes Reported	Laboratory
3025617001	**North Anna Outfall 001**	EPA 900.0m	JC2	2	PASI-PA
		ASTM D5811-95	JAL	1	PASI-PA
		EPA 906.0	RMD	1	PASI-PA

This report shall not be reproduced, except in full,
without the written consent of Pace Analytical Services, Inc..

Pace Analytical®
www.pacelabs.com

Pace Analytical Services, Inc.
1638 Roseytown Road - Suites 2,3,4
Greensburg, PA 15601
(724)850-5600

PROJECT NARRATIVE

Project: North Anna Outfall 001
Pace Project No.: 3025617

Method: EPA 900.0m
Description: 900.0 Gross Alpha/Beta
Client: Dominion Environmental Biology
Date: April 21, 2010

General Information:
1 sample was analyzed for EPA 900.0m. All samples were received in acceptable condition with any exceptions noted below.

Hold Time:
The samples were analyzed within the method required hold times with any exceptions noted below.

Method Blank:
All analytes were below the report limit in the method blank with any exceptions noted below.

Laboratory Control Spike:
All laboratory control spike compounds were within QC limits with any exceptions noted below.

Matrix Spikes:
All percent recoveries and relative percent differences (RPDs) were within acceptance criteria with any exceptions noted below.

Duplicate Sample:
All duplicate sample results were within method acceptance criteria with any exceptions noted below.

Additional Comments:

This report shall not be reproduced, except in full,
without the written consent of Pace Analytical Services, Inc..

Pace Analytical Services, Inc.
1638 Roseytown Road - Suites 2,3,4
Greensburg, PA 15601
(724)850-5600

PROJECT NARRATIVE

Project: North Anna Outfall 001
Pace Project No.: 3025617

Method: **ASTM D5811-95**
Description: 905.0 Strontium 89/90 Eichrom
Client: Dominion Environmental Biology
Date: April 21, 2010

General Information:
1 sample was analyzed for ASTM D5811-95. All samples were received in acceptable condition with any exceptions noted below.

Hold Time:
The samples were analyzed within the method required hold times with any exceptions noted below.

Method Blank:
All analytes were below the report limit in the method blank with any exceptions noted below.

Laboratory Control Spike:
All laboratory control spike compounds were within QC limits with any exceptions noted below.

Matrix Spikes:
All percent recoveries and relative percent differences (RPDs) were within acceptance criteria with any exceptions noted below.

Duplicate Sample:
All duplicate sample results were within method acceptance criteria with any exceptions noted below.

Additional Comments:

This report shall not be reproduced, except in full,
without the written consent of Pace Analytical Services, Inc..

Pace Analytical®
www.pacelabs.com

Pace Analytical Services, Inc.
1638 Roseytown Road - Suites 2,3,4
Greensburg, PA 15601
(724)850-5600

PROJECT NARRATIVE

Project: North Anna Outfall 001
Pace Project No.: 3025617

Method: **EPA 906.0**
Description: 906.0 Tritium
Client: Dominion Environmental Biology
Date: April 21, 2010

General Information:
1 sample was analyzed for EPA 906.0. All samples were received in acceptable condition with any exceptions noted below.

Hold Time:
The samples were analyzed within the method required hold times with any exceptions noted below.

Method Blank:
All analytes were below the report limit in the method blank with any exceptions noted below.

Laboratory Control Spike:
All laboratory control spike compounds were within QC limits with any exceptions noted below.

Matrix Spikes:
All percent recoveries and relative percent differences (RPDs) were within acceptance criteria with any exceptions noted below.

Duplicate Sample:
All duplicate sample results were within method acceptance criteria with any exceptions noted below.

Additional Comments:

This data package has been reviewed for quality and completeness and is approved for release.

This report shall not be reproduced, except in full,
without the written consent of Pace Analytical Services, Inc..

Pace Analytical®
www.pacelabs.com

Pace Analytical Services, Inc.
1638 Roseytown Road - Suites 2,3,4
Greensburg, PA 15601
(724)850-5600

ANALYTICAL RESULTS

Project: North Anna Outfall 001
Pace Project No.: 3025617

Sample: North Anna Outfall 001 **Lab ID: 3025617001** Collected: 04/05/10 10:00 Received: 04/06/10 10:00 Matrix: Water
PWS: Site ID: Sample Type:

Parameters	Method	Act ± Unc (MDC)	Units	Analyzed	CAS No.	Qual
Gross Alpha	EPA 900.0m	**0.551 ± 0.609 (1.09)**	pCi/L	04/12/10 17:59	12587-46-1	
Gross Beta	EPA 900.0m	**0.985 ± 0.858 (1.54)**	pCi/L	04/12/10 17:59	12587-47-2	
Strontium-90	ASTM D5811-95	**1.55 ± 0.423 (0.512)**	pCi/L	04/20/10 16:19	10098-97-2	
Tritium	EPA 906.0	**5,325 ± 752 (210)**	pCi/L	04/10/10 13:44	10028-17-8	

This report shall not be reproduced, except in full,
without the written consent of Pace Analytical Services, Inc..

ACCREDITED IN ACCORDANCE WITH nelac

Pace Analytical®
www.pacelabs.com

Pace Analytical Services, Inc.
1638 Roseytown Road - Suites 2,3,4
Greensburg, PA 15601
(724)850-5600

QUALITY CONTROL DATA

Project: North Anna Outfall 001
Pace Project No.: 3025617

QC Batch: RADC/4759
QC Batch Method: EPA 906.0
Analysis Method: EPA 906.0
Analysis Description: 906.0 Tritium
Associated Lab Samples: 3025617001

METHOD BLANK: 158098
Matrix: Water
Associated Lab Samples: 3025617001

Parameter	Act ± Unc (MDC)	Units	Analyzed	Qualifiers
Tritium	175 ± 131 (210)	pCi/L	04/09/10 21:25	

This report shall not be reproduced, except in full,
without the written consent of Pace Analytical Services, Inc.,

ACCREDITED IN ACCORDANCE WITH nelac

Pace Analytical®
www.pacelabs.com

Pace Analytical Services, Inc.
1638 Roseytown Road - Suites 2,3,4
Greensburg, PA 15601
(724)850-5600

QUALITY CONTROL DATA

Project: North Anna Outfall 001
Pace Project No.: 3025617

QC Batch: RADC/4762
QC Batch Method: EPA 900.0m
Analysis Method: EPA 900.0m
Analysis Description: 900.0 Gross Alpha/Beta
Associated Lab Samples: 3025617001

METHOD BLANK: 158101
Matrix: Water
Associated Lab Samples: 3025617001

Parameter	Act ± Unc (MDC)	Units	Analyzed	Qualifiers
Gross Alpha	-0.105 ± 0.503 (1.58)	pCi/L	04/12/10 08:19	
Gross Beta	0.0178 ± 0.822 (2.03)	pCi/L	04/12/10 08:19	

This report shall not be reproduced, except in full,
without the written consent of Pace Analytical Services, Inc..

ACCREDITED IN ACCORDANCE WITH nelac

Pace Analytical Services, Inc.
1638 Roseytown Road - Suites 2,3,4
Greensburg, PA 15601
(724)850-5600

QUALITY CONTROL DATA

Project: North Anna Outfall 001
Pace Project No.: 3025617

QC Batch: RADC/4842
QC Batch Method: ASTM D5811-95
Analysis Method: ASTM D5811-95
Analysis Description: 905.0 Strontium 89/90 Eichrom
Associated Lab Samples: 3025617001

METHOD BLANK: 161486
Matrix: Water
Associated Lab Samples: 3025617001

Parameter	Act ± Unc (MDC)	Units	Analyzed	Qualifiers
Strontium-90	0.0760 ± 0.290 (0.516)	pCi/L	04/20/10 16:20	

This report shall not be reproduced, except in full,
without the written consent of Pace Analytical Services, Inc..

PRIMARY LABORATORIES CHAIN OF CUSTODY

Primary Laboratories
7423 Lee Davis Road
Mechanicsville, VA 23111
TEL: (804) 559-9004
FAX: (804) 559-9306

CLIENT: Dominion Laboratory Services
ATTN: David Yaworsky
STREET: 11201 Old Stage Road
CITY: Chester
PHONE: 804-717-5901 FAX: 804-717-5916

CONSULTANT:
ATTN:
STREET:
CITY:
PHONE: FAX:

PROJECT:

PRESERVATIVE: 1:1 HCL

INVOICE TO:

P.O. #:

SAMPLED BY:

SAMPLE IDENTIFICATION	SAMPLING: COMPOSITE	GRAB	DATE	TIME	NO. OF CONTAINERS	MATRIX: WATER	SOIL	OTHER	Primary Lab No. (LAB USE ONLY)	ANALYSES: EPA Method 624	COMMENTS
375459NA001		X	4-5-10	1000	2	X			1004106-1	X	

RELINQUISHED BY SAMPLER: DATE: TIME:

RELINQUISHED BY: DATE: TIME:

RELINQUISHED BY: Tanya M Wessel DATE: 4/13/10 TIME: 1538

RECEIVED BY: DATE: TIME:

RECEIVED BY: DATE: TIME:

RECEIVED BY LAB: Rebarthen DATE: 4/13/10 TIME: 15:38

TEMP: 0/F 11 ED

PRESERVATIVE

TAT:
- O 24 HRS / /
- O 48 HRS / /
- O 72 HRS / /
- O 5 DAYS 4/20
- O 10 DAYS / /
- O OTHER / /

CHAIN OF CUSTODY #: ____ OF ____

Pace Analytical
www.pacelabs.com

CHAIN-OF-CUSTODY / Analytical Request Document

The Chain-of-Custody is a LEGAL DOCUMENT. All relevant fields must be completed accurately.

3025617

Page: 1 of 1

Section A
Required Client Information:

Company:	Dominion Environmental Biology
Address:	4111 Castlewood Road
	Richmond, VA 23234
Email To:	glenn.bishop@dom.com
Phone: 804-350-6918	Fax: 888-342-0629
Requested Due Date/TAT:	Normal

Section B
Required Project Information:

Report To:	Glenn Bishop
Copy To:	
Purchase Order No.:	Mastercard
Project Name:	
Project Number:	

Section C
Invoice Information:

Attention:	Glenn Bishop
Company Name:	Dominion
Address:	4111 Castlewood Road 23234
Pace Quote Reference:	46012743
Pace Project Manager:	
Pace Profile #:	

REGULATORY AGENCY

☐ NPDES ☐ GROUND WATER ☐ DRINKING WATER
☐ UST ☐ RCRA ☐ OTHER _____

Site Location STATE: VA

Section D
Required Client Information

Valid Matrix Codes

MATRIX	CODE
DRINKING WATER	DW
WATER	WT
WASTE WATER	WW
PRODUCT	P
SOIL/SOLID	SL
OIL	OL
WIPE	WP
AIR	AR
OTHER	OT
TISSUE	TS

SAMPLE ID
(A-Z, 0-9 / ,-)
Sample IDs MUST BE UNIQUE

Requested Analysis Filtered (Y/N)

ITEM #	SAMPLE ID	MATRIX CODE (see valid codes to left)	SAMPLE TYPE (G=GRAB C=COMP)	COLLECTED COMPOSITE START DATE	COLLECTED COMPOSITE START TIME	COLLECTED COMPOSITE END/GRAB DATE	COLLECTED COMPOSITE END/GRAB TIME	SAMPLE TEMP AT COLLECTION	# OF CONTAINERS	Unpreserved	H_2SO_4	HNO_3	HCl	NaOH	$Na_2S_2O_3$	Methanol	Other	Analysis Test (Y/N)	Gross Alpha	Gross Beta	Strontium 90	Tritium	Pace Project No./ Lab I.D.
1	001 North Anna Outfall 001		G	4/5/10	1000	4/5/10			2	X									x	x	x	x	Note: If Gross Alpha exceeds
2																							5 picocuries / liter, then analyze
3																							for Radium 226 and Radium 228
4																							
5																							
6																							
7																							
8																							
9																							
10																							
11																							
12																							

ADDITIONAL COMMENTS	RELINQUISHED BY / AFFILIATION	DATE	TIME	ACCEPTED BY / AFFILIATION	DATE	TIME	SAMPLE CONDITIONS			
				[signature]			N/A	N	N	Y
					4/5/10	1000				

SAMPLER NAME AND SIGNATURE			Temp in °C	Received on Ice (Y/N)	Custody Sealed Cooler (Y/N)	Samples Intact (Y/N)
PRINT Name of SAMPLER: Glenn Bishop						
SIGNATURE of SAMPLER: [signature]	DATE Signed (MM/DD/YY): 4/5/10					

*Important Note: By signing this form you are accepting Pace's NET 30 day payment terms and agreeing to late charges of 1.5% per month for any invoices not paid within 30 days.

F-ALL-Q-020rev.06, 2-Feb-2007

DOMINION LABORATORY SERVICES

REPORT PRODUCED ON 06/01/2011

CERTIFICATE OF ANALYSIS TEST RESULTS BY SAMPLE

Location: NORTH ANNA

Submitter: GLENN BISHOP

Dominion Lab Number: 388140
Description :OUTFALL 001
Unit: 0

Sample Date: 04/18/2011

Parameter	Result	Method	Test Code	Analyst	Date Analyzed	Time Analyzed	Contract Analyst
Aldrin, ppb	< 0.050	EPA 608	608GC	HERBE31	05/11/2011		HV
Chlordane, ppb	< 0.200	EPA 608	608GC	HERBE31	05/11/2011		HV
Dieldrin, ppb	< 0.100	EPA 608	608GC	HERBE31	05/11/2011		HV
4,4-DDT, ppb	< 0.100	EPA 608	608GC	HERBE31	05/11/2011		HV
4,4-DDE, ppb	< 0.100	EPA 608	608GC	HERBE31	05/11/2011		HV
4,4-DDD, ppb	< 0.100	EPA 608	608GC	HERBE31	05/11/2011		HV
Endosulfan Sulfate, ppb	< 0.100	EPA 608	608GC	HERBE31	05/11/2011		HV
Endosulfan I, ppb	< 0.100	EPA 608	608GC	HERBE31	05/11/2011		HV
Endosulfan II, ppb	< 0.100	EPA 608	608GC	HERBE31	05/11/2011		HV
Endrin, ppb	< 0.100	EPA 608	608GC	HERBE31	05/11/2011		HV
Alpha-BHC, ppb	< 0.100	EPA 608	608GC	HERBE31	05/11/2011		HV
Beta-BHC, ppb	< 0.100	EPA 608	608GC	HERBE31	05/11/2011		HV
Delta-BHC, ppb	< 0.100	EPA 608	608GC	HERBE31	05/11/2011		HV
Gamma-BHC (Lindane), ppb	< 0.050	EPA 608	608GC	HERBE31	05/11/2011		HV
Heptachlor, ppb	< 0.050	EPA 608	608GC	HERBE31	05/11/2011		HV
Kepone, ppb	< 0.100	EPA 608	608GC	HERBE31	05/11/2011		HV
Methoxychlor, ppb	< 0.100	EPA 608	608GC	HERBE31	05/11/2011		HV
Mirex, ppb	< 0.100	EPA 608	608GC	HERBE31	05/11/2011		HV
Endrin Aldehyde, ppb	< 0.100	EPA 608	608GC	HERBE31	05/11/2011		HV
Heptachlor Epoxide, ppb	< 0.100	EPA 608	608GC	HERBE31	05/11/2011		HV
Toxaphene, ppb	< 5.000	EPA 608	608GC	HERBE31	05/11/2011		HV
T-Hard. as CaCO3,PPM	17.10	SM18TH 2340C	HARD	SHEIL28	04/19/2011	1505	
Arsenic as As, ppb	< 3.	SM18TH 3113B	ASPPB	STEVE72	05/11/2011	2000	
Cadmium as Cd, ppb	< 0.3	SM18TH 3113B	CDPPB	STEVE72	05/13/2011	1140	
Chromium as Cr, ppb	< 1.	SM18TH 3113B	CRPPB	STEVE72	05/10/2011	1557	
Copper as Cu, ppb	3.	SM18TH 3113B	CUPPB	STEVE72	05/10/2011	351	
Lead as Pb, ppb	< 1.	SM18TH 3113B	PBPPB	STEVE72	05/10/2011	154	
Mercury as Hg, ppb	< 0.2	SM18TH 3112B	HGPPB	STEVE72	05/04/2011	705	
Nickel as Ni, ppb	< 5.	SM18TH 3113B	NIPPB	STEVE72	05/13/2011	956	
Silver as Ag, ppb	< 0.1	SM18TH 3113B	AGPPB	STEVE72	05/12/2011	1429	
Antimony as Sb, ppb	< 1.	SM18TH 3113B	SBPPB	STEVE72	05/12/2011	1222	
Selenium as Se, ppb	< 3.	SM18TH 3113B	SEPPB	STEVE72	05/11/2011	1511	

Note 1: Initials in the Contract Analyst column indicate the analyst from the Contract Lab that ran the sample. Analyst for this parameter was the individual that entered results into the LIMS system.

DOMINION LABORATORY SERVICES

REPORT PRODUCED ON 06/01/2011

CERTIFICATE OF ANALYSIS TEST RESULTS BY SAMPLE

Location: NORTH ANNA

Submitter: GLENN BISHOP

Dominion Lab Number: 388140
Description :OUTFALL 001
Unit: 0

Sample Date: 04/18/2011

Parameter		Result	Method	Test Code	Analyst	Date Analyzed	Time Analyzed	Contract Analyst
Thallium as Tl, ppb	<	0.2	EPA 279.2	TLPPB	STEVE72	05/12/2011	1334	
Zinc as Zn, PPM		0.010	SM18TH 3111B	ZN	DAWNE01	05/11/2011	1559	
Dis. As, ppb	<	3.	SM18TH 3113B	ASDISPPB	STEVE72	05/11/2011	2000	
Dis. Cd, ppb	<	0.3	SM18TH 3113B	CDDISPPB	STEVE72	05/13/2011	1140	
Dis. Cr, ppb	<	1.	SM18TH 3113B	CRDISPPB	STEVE72	05/10/2011	1557	
Dis. Cu, ppb		2.	SM18TH 3113B	CUDISPPB	STEVE72	05/10/2011	351	
Dis. Pb, ppb	<	1.	SM18TH 3113B	PBDISPPB	STEVE72	05/10/2011	154	
Dis. Hg, ppb	<	0.2	SM18TH 3112B	HGDISPPB	STEVE72	05/04/2011	705	
Dis. Ni, ppb	<	5.	SM18TH 3113B	NIDISPPB	STEVE72	05/13/2011	956	
Dis. Ag, ppb	<	0.1	SM18TH 3113B	AGDISPPB	STEVE72	05/12/2011	1429	
Dis. Sb, ppb	<	1.	SM18TH 3113B	SBDISPPB	STEVE72	05/12/2011	1222	
Dis. Se, ppb	<	3.	SM18TH 3113B	SEDISPPB	STEVE72	05/11/2011	1511	
Dis. Tl, ppb	<	0.2	EPA 279.2	TLDISPPB	STEVE72	05/12/2011	1334	
Dis. Zn, PPM	<	0.010	SM18TH 3111B	ZNDIS	DAWNE01	05/11/2011	1559	
Ammonia as N, PPM		0.03	SM18TH 4500NH3F	NH3	DAWNE01	04/27/2011	1600	
Total Xylenes, ppb	<	0.2	SW846 MTD 8021M	XYLENE	SHEIL28	04/25/2011	1611	
Phenol, ppb	<	2.70	EPA 625	ACID625	CHAR130	05/10/2011	2052	
2-Chlorophenol, ppb	<	3.30	EPA 625	ACID625	CHAR130	05/10/2011	2052	
2-Nitrophenol, ppb	<	3.60	EPA 625	ACID625	CHAR130	05/10/2011	2052	
2,4-Dimethylphenol, ppb	<	5.20	EPA 625	ACID625	CHAR130	05/10/2011	2052	
2,4-Dichlorophenol, ppb	<	5.60	EPA 625	ACID625	CHAR130	05/10/2011	2052	
4-Chloro-3-Methylphenol, ppb	<	7.50	EPA 625	ACID625	CHAR130	05/10/2011	2052	
2,4,6-Trichlorophenol, ppb	<	2.70	EPA 625	ACID625	CHAR130	05/10/2011	2052	
2,4-Dinitrophenol, ppb	<	42.00	EPA 625	ACID625	CHAR130	05/10/2011	2052	
4-Nitrophenol, ppb	<	2.40	EPA 625	ACID625	CHAR130	05/10/2011	2052	
2-Methyl-4,6-Dinitrophenol, ppb	<	24.00	EPA 625	ACID625	CHAR130	05/10/2011	2052	
Pentachlorophenol, ppb	<	3.60	EPA 625	ACID625	CHAR130	05/10/2011	2052	
N-Nitrosodimethylamine, ppb	<	6.20	EPA 625	BN625	CHAR130	05/10/2011	1724	
Bis(-2-Chloroethyl) ether, ppb	<	5.70	EPA 625	BN625	CHAR130	05/10/2011	1724	
Bis(2-Chloroisopropyl) ether, ppb	<	5.70	EPA 625	BN625	CHAR130	05/10/2011	1724	
N-nitroso-Di-n-propylamine, ppb	<	3.60	EPA 625	BN625	CHAR130	05/10/2011	1724	
Hexachloroethane, ppb	<	2.40	EPA 625	BN625	CHAR130	05/10/2011	1724	

Note 1: Initials in the Contract Analyst column indicate the analyst from the Contract Lab that ran the sample. Analyst for this parameter was the individual that entered results into the LIMS system.

DOMINION LABORATORY SERVICES
==========
REPORT PRODUCED ON 06/01/2011

CERTIFICATE OF ANALYSIS TEST RESULTS BY SAMPLE

Location: NORTH ANNA

Submitter: GLENN BISHOP

Dominion Lab Number: 388140
Description :OUTFALL 001
Unit: 0

Sample Date: 04/18/2011

Parameter	Result	Method	Test Code	Analyst	Date Analyzed	Time Analyzed	Contract Analyst
Nitrobenzene, ppb	< 4.20	EPA 625	BN625	CHAR130	05/10/2011	1724	
Isophorone, ppb	< 5.10	EPA 625	BN625	CHAR130	05/10/2011	1724	
Bis(-2-Chloroethoxy) Methane, ppb	< 5.30	EPA 625	BN625	CHAR130	05/10/2011	1724	
1,2,4-Trichlorobenzene, ppb	< 7.90	EPA 625	BN625	CHAR130	05/10/2011	1724	
Naphthalene, ppb	< 3.80	EPA 625	BN625	CHAR130	05/10/2011	1724	
Hexachlorobutadiene, ppb	< 1.80	EPA 625	BN625	CHAR130	05/10/2011	1724	
Hexachlorocyclopentadiene, ppb	< 10.00	EPA 625	BN625	CHAR130	05/10/2011	1724	
2-Chloronaphthalene, ppb	< 4.60	EPA 625	BN625	CHAR130	05/10/2011	1724	
Dimethyl Phthalate, ppb	< 7.50	EPA 625	BN625	CHAR130	05/10/2011	1724	
Acenaphthylene, ppb	< 3.50	EPA 625	BN625	CHAR130	05/10/2011	1724	
2,6-Dinitrotoluene, ppb	< 3.40	EPA 625	BN625	CHAR130	05/10/2011	1724	
Acenaphthene, ppb	< 3.00	EPA 625	BN625	CHAR130	05/10/2011	1724	
2,4-Dinitrotoluene, ppb	< 5.70	EPA 625	BN625	CHAR130	05/10/2011	1724	
Diethylphthalate, ppb	< 7.40	EPA 625	BN625	CHAR130	05/10/2011	1724	
Fluorene, ppb	< 2.20	EPA 625	BN625	CHAR130	05/10/2011	1724	
4-Chlorophenyl-phenylether, ppb	< 4.20	EPA 625	BN625	CHAR130	05/10/2011	1724	
N-nitrosodiphenylamine, ppb	< 2.70	EPA 625	BN625	CHAR130	05/10/2011	1724	
1,2-Diphenylhydrazine, ppb	< 8.80	EPA 625	BN625	CHAR130	05/10/2011	1724	
4-Bromophenyl-phenylether, ppb	< 3.00	EPA 625	BN625	CHAR130	05/10/2011	1724	
Hexachlorobenzene, ppb	< 3.10	EPA 625	BN625	CHAR130	05/10/2011	1724	
Phenanthrene, ppb	< 5.40	EPA 625	BN625	CHAR130	05/10/2011	1724	
Anthracene, ppb	< 1.90	EPA 625	BN625	CHAR130	05/10/2011	1724	
Di-n-Butylphthalate, ppb	< 6.40	EPA 625	BN625	CHAR130	05/10/2011	1724	
Fluoranthene, ppb	< 2.20	EPA 625	BN625	CHAR130	05/10/2011	1724	
Benzidine, ppb	< 63.00	EPA 625	BN625	CHAR130	05/10/2011	1724	
Pyrene, ppb	< 3.80	EPA 625	BN625	CHAR130	05/10/2011	1724	
Butylbenzylphthalate, ppb	< 2.50	EPA 625	BN625	CHAR130	05/10/2011	1724	
Chrysene, ppb	< 2.50	EPA 625	BN625	CHAR130	05/10/2011	1724	
3,3'-Dichlorobenzidine, ppb	< 16.50	EPA 625	BN625	CHAR130	05/10/2011	1724	
Benzo (a) Anthracene, ppb	< 7.80	EPA 625	BN625	CHAR130	05/10/2011	1724	
Bis(2-ethylhexyl) Phthalate, ppb	< 2.50	EPA 625	BN625	CHAR130	05/10/2011	1724	
Di-n-octyl Phthalate, ppb	< 2.50	EPA 625	BN625	CHAR130	05/10/2011	1724	

Note 1: Initials in the Contract Analyst column indicate the analyst from the Contract Lab that ran the sample. Analyst for this parameter was the individual that entered results into the LIMS system.

DOMINION LABORATORY SERVICES

REPORT PRODUCED ON 06/01/2011

CERTIFICATE OF ANALYSIS TEST RESULTS BY SAMPLE

Location: NORTH ANNA

Submitter: GLENN BISHOP

Dominion Lab Number: 388140
Description :OUTFALL 001
Unit: 0

Sample Date: 04/18/2011

Parameter	Result	Method	Test Code	Analyst	Date Analyzed	Time Analyzed	Contract Analyst
Benzo (b) fluoranthene, ppb	< 4.80	EPA 625	BN625	CHAR130	05/10/2011	1724	
Benzo (k) fluoranthene, ppb	< 2.50	EPA 625	BN625	CHAR130	05/10/2011	1724	
Benzo (a) pyrene, ppb	< 2.50	EPA 625	BN625	CHAR130	05/10/2011	1724	
Indeno (1 2 3-cd) pyrene, ppb	< 3.70	EPA 625	BN625	CHAR130	05/10/2011	1724	
Dibenzo (a h) anthracene, ppb	< 2.50	EPA 625	BN625	CHAR130	05/10/2011	1724	
Benzo (g h i) perylene, ppb	< 4.10	EPA 625	BN625	CHAR130	05/10/2011	1724	
Methyl Chloride, ppb	< 1.10	EPA 624	VOA624	CHAR130	04/20/2011	1057	
Methyl Bromide, ppb	< 1.40	EPA 624	VOA624	CHAR130	04/20/2011	1057	
Vinyl Chloride, ppb	< 1.80	EPA 624	VOA624	CHAR130	04/20/2011	1057	
Chloroethane, ppb	< 1.10	EPA 624	VOA624	CHAR130	04/20/2011	1057	
Methylene Chloride, ppb	< 2.80	EPA 624	VOA624	CHAR130	04/20/2011	1057	
Acrolein, ppb	< 10.00	EPA 624	VOA624	CHAR130	04/20/2011	1057	
Acrylonitrile, ppb	< 1.50	EPA 624	VOA624	CHAR130	04/20/2011	1057	
Trichlorofluoromethane, ppb	< 2.30	EPA 624	VOA624	CHAR130	04/20/2011	1057	
1,1-Dichloroethylene, ppb	< 2.80	EPA 624	VOA624	CHAR130	04/20/2011	1057	
1,1-Dichloroethane, ppb	< 4.70	EPA 624	VOA624	CHAR130	04/20/2011	1057	
1,2-Trans-Dichloroethylene, ppb	< 1.60	EPA 624	VOA624	CHAR130	04/20/2011	1057	
Chloroform, ppb	< 1.60	EPA 624	VOA624	CHAR130	04/20/2011	1057	
1,2-Dichloroethane, ppb	< 2.80	EPA 624	VOA624	CHAR130	04/20/2011	1057	
1,1,1-Trichloroethane, ppb	< 3.80	EPA 624	VOA624	CHAR130	04/20/2011	1057	
Carbon Tetrachloride, ppb	< 2.80	EPA 624	VOA624	CHAR130	04/20/2011	1057	
Dichlorobromomethane, ppb	< 2.20	EPA 624	VOA624	CHAR130	04/20/2011	1057	
1,2-Dichloropropane, ppb	< 6.00	EPA 624	VOA624	CHAR130	04/20/2011	1057	
Cis-1 3-Dichloropropylene, ppb	< 5.00	EPA 624	VOA624	CHAR130	04/20/2011	1057	
Trans-1 3-Dichloropropylene, ppb	< 0.90	EPA 624	VOA624	CHAR130	04/20/2011	1057	
Trichloroethylene, ppb	< 1.90	EPA 624	VOA624	CHAR130	04/20/2011	1057	
Chlorodibromomethane, ppb	< 3.10	EPA 624	VOA624	CHAR130	04/20/2011	1057	
Benzene, ppb	< 4.40	EPA 624	VOA624	CHAR130	04/20/2011	1057	
1,1,2-Trichloroethane, ppb	< 5.00	EPA 624	VOA624	CHAR130	04/20/2011	1057	
2-Chloroethylvinyl Ether, ppb	< 1.20	EPA 624	VOA624	CHAR130	04/20/2011	1057	
Bromoform, ppb	< 4.70	EPA 624	VOA624	CHAR130	04/20/2011	1057	
1,1,2,2-Tetrachloroethane, ppb	< 6.90	EPA 624	VOA624	CHAR130	04/20/2011	1057	

Note 1: Initials in the Contract Analyst column indicate the analyst from the Contract Lab that ran the sample. Analyst for this parameter was the individual that entered results into the LIMS system.

DOMINION LABORATORY SERVICES

REPORT PRODUCED ON 06/01/2011

CERTIFICATE OF ANALYSIS TEST RESULTS BY SAMPLE

Location: NORTH ANNA

Submitter: GLENN BISHOP

Dominion Lab Number: 388140
Description :OUTFALL 001
Unit: 0

Sample Date: 04/18/2011

Parameter	Result	Method	Test Code	Analyst	Date Analyzed	Time Analyzed	Contract Analyst
Tetrachloroethylene, ppb	< 4.10	EPA 624	VOA624	CHAR130	04/20/2011	1057	
Toluene, ppb	< 6.00	EPA 624	VOA624	CHAR130	04/20/2011	1057	
Chlorobenzene, ppb	< 6.00	EPA 624	VOA624	CHAR130	04/20/2011	1057	
Ethylbenzene, ppb	< 7.20	EPA 624	VOA624	CHAR130	04/20/2011	1057	
1,3 Dichlorobenzene, ppb	< 5.00	EPA 624	VOA624	CHAR130	04/20/2011	1057	
1,4 Dichlorobenzene, ppb	< 5.00	EPA 624	VOA624	CHAR130	04/20/2011	1057	
1,2 Dichlorobenzene, ppb	< 5.00	EPA 624	VOA624	CHAR130	04/20/2011	1057	
Gross Alpha, pCi/L	< 2.080	EPA 900.0	RADIO	HERBE31	04/27/2011	1055	JC2
Gross Beta, pCi/L	< 2.230	EPA 900.0	RADIO	HERBE31	04/27/2011	1055	JC2
Strontium-90, pCi/L	< 1.150	PGH-R-010-A	SR-90	HERBE31	05/10/2011	707	MBT
Tritium, pCi/L	3326.00	EPA 906.0	TRITIUM	HERBE31	04/30/2011	1410	RMD
Chloride as Cl, PPM	5.74	EPA 300	CLIC	DAWNE01	05/05/2011	1743	
1,2 Diphenylhydrazine, ppb	< 0.1	EPA 625	625DPH	HERBE31	05/19/2011		HV
Cyanide as CN, PPM	< 0.010	SM 4500CN E	CN	HERBE31	04/20/2011		HV
Tributyltin, ng/L	< 30.	GC/FPD	TRIBUTIN	HERBE31	04/27/2011		SC
Hydrogen Sulfide, PPM	< 0.05	EPA 376.1	HYDSULF	HERBE31	04/26/2011		HV
E. Coli, MPN	< 1.	SM9221F	ECOLI	HERBE31	04/18/2011	1400	MS
Chrom. +6 as Cr6,PPM	< 0.005	SM 3500-CR D	CR6	HERBE31	04/18/2011	1430	NA
Arochlor 1016, ppb	< 1.0	EPA 608	608PCB	HERBE31	05/11/2011		HV
Arochlor 1221, ppb	< 1.0	EPA 608	608PCB	HERBE31	05/11/2011		HV
Arochlor 1232, ppb	< 1.0	EPA 608	608PCB	HERBE31	05/11/2011		HV
Arochlor 1242, ppb	< 1.0	EPA 608	608PCB	HERBE31	05/11/2011		HV
Arochlor 1248, ppb	< 1.0	EPA 608	608PCB	HERBE31	05/11/2011		HV
Arochlor 1254, ppb	< 1.0	EPA 608	608PCB	HERBE31	05/11/2011		HV
Arochlor 1260, ppb	< 1.0	EPA 608	608PCB	HERBE31	05/11/2011		HV
Chlorpyrifos, ppb	< 0.2000	EPA 622	ORGPHOS	HERBE31	05/06/2011		
Demeton, ppb	< 1.0000	EPA 622	ORGPHOS	HERBE31	05/06/2011		
Diazinon, ppb	< 1.0000	EPA 622	ORGPHOS	HERBE31	05/06/2011		
Guthion, ppb	< 1.0000	EPA 622	ORGPHOS	HERBE31	05/06/2011		
Malathion, ppb	< 1.0000	EPA 622	ORGPHOS	HERBE31	05/06/2011		
Parathion, ppb	< 1.0000	EPA 622	ORGPHOS	HERBE31	05/06/2011		

Note 1: Initials in the Contract Analyst column indicate the analyst from the Contract Lab that ran the sample. Analyst for this parameter was the individual that entered results into the LIMS system.

418117

Temp = 1.7°C @ Delivery
on ice

Location:	North Anna	Requested by:	[illegible] Bishop	Priority:	
Required Date:	5/18/11	Phone:		Date Analysis Complete:	
Comment:		Sampled by:	[illegible]	Date Approved Released:	

Bottle Types: C=Cyanide, FC=Fecal coliform, O/G=Oil and Grease, PT=Phenols Total, V=Volatiles, M=Metals, A=[Ammonia,TKN,TP,COD], BOD=Biological Oxygen Demand, R=Radioactivity SUL=Sulfide, SUR=Surfactants, TOC=Total Organic Carbon, TSS=[Total Suspended Solids,BR,B,F,NO_3/NO_2,SO_4,Color,TDS,Chloride] ABN=Acid Base Neutrals, PP=Pesticide/PCBs, D=Dioxin

Preservatives: HCl=Hydrochloric acid, CS=Cu Sulfate, S=Sulfuric acid, N=Nitric acid, ZA=Zinc acetate, SH=Sodium Hydroxide

Tests Required 1= [Volatiles, Total xylenes], Ammonia, Chlorides
2= ABN
3= TR and Diss Metals Sb,As,Cd,Cr3,Cu,Pb,Hg,Ni,Se,Ag,Tl,Zn, Hardness

Bottles
pH<2 or >9
√

X - PLACE AN "X" IN THE BOX FOR SAMPLES TO BE SUBMITTED

System Lab Number	x	Sample ID	Sample Date	Sample Time	Comp	Grab	Cl_2 Screen [Cn,NH3, ABN,Vol]	Sulfide Screen [Cn]	C	FC	O/G	PT	V	M	A	BOD	R	SUL	SUR	TOC	TSS	ABN	P/P	D	Test Required	Notes
Preservative											HCl	CS,S	HCl	N	S		N	ZA,SH		HCl						
366140		Outfall 001	4/18/11	1015		X							6	2	1						1	3			1,2,3	TRC = <0.02
		Intake				X								3											~~2~~	No Sample
		Equip blank				X								1											~~3~~	~~No hardness or Gr6~~

Relinquished by: (Signature) [illegible]	Date 4/18/11 Time 1335	Received by: (Signature) [illegible]	Date 4/19/11 Time 1335
Relinquished by: (Signature)	Date Time	Received by: (Signature)	Date Time

AEM-MTA

coc AppB NAnna 001.xls

Pace Analytical®
www.pacelabs.com

Pace Analytical Services, Inc.
1638 Roseytown Road - Suites 2,3,4
Greensburg, PA 15601
(724)850-5600

May 10, 2011

Mr. Glenn Bishop
Dominion Environmental Biology
4111 Castlewood Road
Richmond, VA 23234

RE: Project: North Anna 001
Pace Project No.: 3045251

Dear Mr. Bishop:
Enclosed are the analytical results for sample(s) received by the laboratory on April 20, 2011. The results relate only to the samples included in this report. Results reported herein conform to the most current NELAC standards, where applicable, unless otherwise narrated in the body of the report.

If you have any questions concerning this report, please feel free to contact me.

Sincerely,

Carin A. Ferris

Carin Ferris for
Jacquelyn Collins
jacquelyn.collins@pacelabs.com
Project Manager

Enclosures

REPORT OF LABORATORY ANALYSIS

This report shall not be reproduced, except in full,
without the written consent of Pace Analytical Services, Inc..

nelac

Pace Analytical Services, Inc.
1638 Roseytown Road - Suites 2,3,4
Greensburg, PA 15601
(724)850-5600

CERTIFICATIONS

Project: North Anna 001
Pace Project No.: 3045251

Pennsylvania Certification IDs
1638 Roseytown Road Suites 2,3&4, Greensburg, PA 15601
Alabama Certification #: 41590
Arizona Certification #: AZ0734
Arkansas Certification
California/NELAC Certification #: 04222CA
Colorado Certification
Connecticut Certification #: PH 0694
Delaware Certification
Florida/NELAC Certification #: E87683
Guam/PADEP Certification
Hawaii/PADEP Certification
Idaho Certification
Illinois/PADEP Certification
Indiana/PADEP Certification
Iowa Certification #: 391
Kansas/NELAC Certification #: E-10358
Kentucky Certification #: 90133
Louisiana/NELAC Certification #: LA080002
Louisiana/NELAC Certification #: 4086
Maine Certification #: PA0091
Maryland Certification #: 308
Massachusetts Certification #: M-PA1457
Michigan/PADEP Certification
Missouri Certification #: 235
Montana Certification #: Cert 0082
Nevada Certification
New Hampshire/NELAC Certification #: 2976
New Jersey/NELAC Certification #: PA 051
New Mexico Certification
New York/NELAC Certification #: 10888
North Carolina Certification #: 42706
Oregon/NELAC Certification #: PA200002
Pennsylvania/NELAC Certification #: 65-00282
Puerto Rico Certification #: PA01457
South Dakota Certification
Tennessee Certification #: TN2867
Texas/NELAC Certification #: T104704188-09 TX
Utah/NELAC Certification #: ANTE
Virgin Island/PADEP Certification
Virginia Certification #: 00112
Washington Certification #: C1941
West Virginia Certification #: 143
Wisconsin/PADEP Certification
Wyoming Certification #: 8TMS-Q

This report shall not be reproduced, except in full,
without the written consent of Pace Analytical Services, Inc..

Pace Analytical Services, Inc.
1638 Roseytown Road - Suites 2,3,4
Greensburg, PA 15601
(724)850-5600

SAMPLE SUMMARY

Project: North Anna 001
Pace Project No.: 3045251

Lab ID	Sample ID	Matrix	Date Collected	Date Received
3045251001	**North Anna 001**	Water	04/18/11 10:15	04/20/11 09:30

This report shall not be reproduced, except in full,
without the written consent of Pace Analytical Services, Inc..

Pace Analytical Services, Inc.
1638 Roseytown Road - Suites 2,3,4
Greensburg, PA 15601
(724)850-5600

SAMPLE ANALYTE COUNT

Project: North Anna 001
Pace Project No.: 3045251

Lab ID	Sample ID	Method	Analysts	Analytes Reported	Laboratory
3045251001	North Anna 001	EPA 900.0m	JC2	2	PASI-PA
		ASTM D5811-95	MBT	1	PASI-PA
		EPA 906.0	RMD	1	PASI-PA

This report shall not be reproduced, except in full,
without the written consent of Pace Analytical Services, Inc..

Pace Analytical Services, Inc.
1638 Roseytown Road - Suites 2,3,4
Greensburg, PA 15601
(724)850-5600

PROJECT NARRATIVE

Project: North Anna 001
Pace Project No.: 3045251

Method: **EPA 900.0m**
Description: 900.0 Gross Alpha/Beta
Client: Dominion Environmental Biology
Date: May 10, 2011

General Information:
1 sample was analyzed for EPA 900.0m. All samples were received in acceptable condition with any exceptions noted below.

Hold Time:
The samples were analyzed within the method required hold times with any exceptions noted below.

Method Blank:
All analytes were below the report limit in the method blank with any exceptions noted below.

Laboratory Control Spike:
All laboratory control spike compounds were within QC limits with any exceptions noted below.

Matrix Spikes:
All percent recoveries and relative percent differences (RPDs) were within acceptance criteria with any exceptions noted below.

Duplicate Sample:
All duplicate sample results were within method acceptance criteria with any exceptions noted below.

Additional Comments:

This report shall not be reproduced, except in full,
without the written consent of Pace Analytical Services, Inc..

Pace Analytical Services, Inc.
1638 Roseytown Road - Suites 2,3,4
Greensburg, PA 15601
(724)850-5600

PROJECT NARRATIVE

Project: North Anna 001
Pace Project No.: 3045251

Method: **ASTM D5811-95**
Description: 905.0 Strontium 89/90 Eichrom
Client: Dominion Environmental Biology
Date: May 10, 2011

General Information:
1 sample was analyzed for ASTM D5811-95. All samples were received in acceptable condition with any exceptions noted below.

Hold Time:
The samples were analyzed within the method required hold times with any exceptions noted below.

Method Blank:
All analytes were below the report limit in the method blank with any exceptions noted below.

Laboratory Control Spike:
All laboratory control spike compounds were within QC limits with any exceptions noted below.

Matrix Spikes:
All percent recoveries and relative percent differences (RPDs) were within acceptance criteria with any exceptions noted below.

Duplicate Sample:
All duplicate sample results were within method acceptance criteria with any exceptions noted below.

Additional Comments:

This report shall not be reproduced, except in full,
without the written consent of Pace Analytical Services, Inc..

Pace Analytical Services, Inc.
1638 Roseytown Road - Suites 2,3,4
Greensburg, PA 15601
(724)850-5600

PROJECT NARRATIVE

Project: North Anna 001
Pace Project No.: 3045251

Method: EPA 906.0
Description: 906.0 Tritium
Client: Dominion Environmental Biology
Date: May 10, 2011

General Information:
1 sample was analyzed for EPA 906.0. All samples were received in acceptable condition with any exceptions noted below.

Hold Time:
The samples were analyzed within the method required hold times with any exceptions noted below.

Method Blank:
All analytes were below the report limit in the method blank with any exceptions noted below.

Laboratory Control Spike:
All laboratory control spike compounds were within QC limits with any exceptions noted below.

Matrix Spikes:
All percent recoveries and relative percent differences (RPDs) were within acceptance criteria with any exceptions noted below.

Duplicate Sample:
All duplicate sample results were within method acceptance criteria with any exceptions noted below.

Additional Comments:

This data package has been reviewed for quality and completeness and is approved for release.

This report shall not be reproduced, except in full,
without the written consent of Pace Analytical Services, Inc..

Pace Analytical Services, Inc.
1638 Roseytown Road - Suites 2,3,4
Greensburg, PA 15601
(724)850-5600

ANALYTICAL RESULTS

Project: North Anna 001
Pace Project No.: 3045251

Sample: North Anna 001 **Lab ID: 3045251001** Collected: 04/18/11 10:15 Received: 04/20/11 09:30 Matrix: Water
PWS: Site ID: Sample Type:

Parameters	Method	Act ± Unc (MDC)	Units	Analyzed	CAS No.	Qual
Gross Alpha	EPA 900.0m	**-0.249 ± 0.672 (2.08)**	pCi/L	04/27/11 10:55	12587-46-1	
Gross Beta	EPA 900.0m	**1.83 ± 1.17 (2.23)**	pCi/L	04/27/11 10:55	12587-47-2	
Strontium-90	ASTM D5811-95	**0.325 ± 0.513 (1.15)**	pCi/L	05/10/11 07:07	10098-97-2	
Tritium	EPA 906.0	**3,326 ± 500 (223)**	pCi/L	04/30/11 14:10	10028-17-8	

This report shall not be reproduced, except in full,
without the written consent of Pace Analytical Services, Inc..

Pace Analytical Services, Inc.
1638 Roseytown Road - Suites 2,3,4
Greensburg, PA 15601
(724)850-5600

QUALITY CONTROL DATA

Project: North Anna 001
Pace Project No.: 3045251

QC Batch: RADC/8136
QC Batch Method: EPA 900.0m
Analysis Method: EPA 900.0m
Analysis Description: 900.0 Gross Alpha/Beta
Associated Lab Samples: 3045251001

METHOD BLANK: 291325
Matrix: Water
Associated Lab Samples: 3045251001

Parameter	Act ± Unc (MDC)	Units	Analyzed	Qualifiers
Gross Alpha	-0.389 ± 0.370 (1.58)	pCi/L	04/27/11 11:01	
Gross Beta	-0.222 ± 0.700 (1.85)	pCi/L	04/27/11 11:01	

This report shall not be reproduced, except in full,
without the written consent of Pace Analytical Services, Inc..

Pace Analytical Services, Inc.
1638 Roseytown Road - Suites 2,3,4
Greensburg, PA 15601
(724)850-5600

QUALITY CONTROL DATA

Project: North Anna 001
Pace Project No.: 3045251

QC Batch: RADC/8181 | Analysis Method: EPA 906.0
QC Batch Method: EPA 906.0 | Analysis Description: 906.0 Tritium
Associated Lab Samples: 3045251001

METHOD BLANK: 292390 | Matrix: Water
Associated Lab Samples: 3045251001

Parameter	Act ± Unc (MDC)	Units	Analyzed	Qualifiers
Tritium	-39.6 ± 124 (222)	pCi/L	04/30/11 11:07	

This report shall not be reproduced, except in full,
without the written consent of Pace Analytical Services, Inc..

Pace Analytical Services, Inc.
1638 Roseytown Road - Suites 2,3,4
Greensburg, PA 15601
(724)850-5600

QUALITY CONTROL DATA

Project: North Anna 001
Pace Project No.: 3045251

QC Batch: RADC/8279
QC Batch Method: ASTM D5811-95
Analysis Method: ASTM D5811-95
Analysis Description: 905.0 Strontium 89/90 Eichrom
Associated Lab Samples: 3045251001

METHOD BLANK: 294627
Matrix: Water
Associated Lab Samples: 3045251001

Parameter	Act ± Unc (MDC)	Units	Analyzed	Qualifiers
Strontium-90	0.0820 ± 0.635 (1.51)	pCi/L	05/10/11 07:07	

This report shall not be reproduced, except in full,
without the written consent of Pace Analytical Services, Inc..

Pace Analytical Services, Inc.
1638 Roseytown Road - Suites 2,3,4
Greensburg, PA 15601
(724)850-5600

QUALIFIERS

Project: North Anna 001
Pace Project No.: 3045251

DEFINITIONS

DF - Dilution Factor, if reported, represents the factor applied to the reported data due to changes in sample preparation, dilution of the sample aliquot, or moisture content.

ND - Not Detected at or above adjusted reporting limit.

J - Estimated concentration above the adjusted method detection limit and below the adjusted reporting limit.

MDL - Adjusted Method Detection Limit.

S - Surrogate

1,2-Diphenylhydrazine (8270 listed analyte) decomposes to Azobenzene.

Consistent with EPA guidelines, unrounded data are displayed and have been used to calculate % recovery and RPD values.

LCS(D) - Laboratory Control Sample (Duplicate)

MS(D) - Matrix Spike (Duplicate)

DUP - Sample Duplicate

RPD - Relative Percent Difference

NC - Not Calculable.

SG - Silica Gel - Clean-Up

U - Indicates the compound was analyzed for, but not detected.

N-Nitrosodiphenylamine decomposes and cannot be separated from Diphenylamine using Method 8270. The result reported for each analyte is a combined concentration.

Act - Activity

Unc - Uncertainty

(MDC) - Minimum Detectable Concentration

Pace Analytical is NELAP accredited. Contact your Pace PM for the current list of accredited analytes.

LABORATORIES

PASI-PA Pace Analytical Services - Greensburg

This report shall not be reproduced, except in full,
without the written consent of Pace Analytical Services, Inc..

Primary Laboratories, Inc.

7423 Lee Davis Road • Mechanicsville, VA 23111 • Telephone (804) 559-9004 • Fax (804) 559-9306

ANALYTICAL LABORATORY REPORT

1-Jun-11
Previously Reported On:
19-May-11

Dominion Virginia Power
Attn: Glenn Bishop
4111 Castlewood Road
Richmond, Va. 23234

Date Received: 18-Apr-11
Date Sampled: 18-Apr-11
Work Order No: 1104141-01
Client ID: **North Anna Outfall 001**

Test Description	Final Result	Reporting Limit	Units of Measure	Method Numbers*	Date Analyzed	Tech. Initials
1,2 Diphenylhydrazine	<0.1	0.1	ug/L	526	19-May-11	HV
Cyanide	<0.01	0.01	mg/L	4500CN E	20-Apr-11	HV
Tributyltin	<30	30	ng/L	GC/FPD	27-Apr-11	SC**
Hydrogen Sulfide	<0.050	0.050	mg/L	376.1	26-Apr-11	HV
E Coli	<1.0	1.0	MPN/100ml	9221 F (20)	18-Apr-11 at 14:00	MS
Hexavalent Chromium	<0.005	0.005	mg/L	3500	18-Apr-11 at 14:30	NA

** Analysis sub-contracted to Universal Laboratories.

Primary Laboratories, Inc.
Results

1-Jun-11

Date Sampled: 18-Apr-11
Work Order No: 1104141-01
Client ID: **North Anna Outfall 001**

Test Description	Final Result	Reporting Limit	Units of Measure	Method Numbers*	Date Analyzed	Tech. Initials
Pesticides						
Aldrin	<0.05	0.05	ug/L	608	11-May-11	HV
Chlordane	<0.20	0.20	ug/L	608	11-May-11	HV
Dieldrin	<0.10	0.10	ug/L	608	11-May-11	HV
4,4-DDT	<0.10	0.10	ug/L	608	11-May-11	HV
4,4-DDE	<0.10	0.10	ug/L	608	11-May-11	HV
4,4-DDD	<0.10	0.10	ug/L	608	11-May-11	HV
Endosulfan sulfate	<0.10	0.10	ug/L	608	11-May-11	HV
Endosulfan I	<0.10	0.10	ug/L	608	11-May-11	HV
Endosulfan II	<0.10	0.10	ug/L	608	11-May-11	HV
Endrin	<0.10	0.10	ug/L	608	11-May-11	HV
Endrin Aldehyde	<0.10	0.10	ug/L	608	11-May-11	HV
Alpha-BHC	<0.1	0.1	ug/L	608	11-May-11	HV
Beta-BHC	<0.1	0.1	ug/L	608	11-May-11	HV
Delta-BHC	<0.1	0.1	ug/L	608	11-May-11	HV
Gamma-BHC (Lindane)	<0.05	0.05	ug/L	608	11-May-11	HV
Heptachlor	<0.05	0.05	ug/L	608	11-May-11	HV
Heptachlor Epoxide	<0.10	0.10	ug/L	608	11-May-11	HV
Kepone	<0.10	0.10	ug/L	608	11-May-11	HV
Methoxychlor	<0.10	0.10	ug/L	608	11-May-11	HV
Mirex	<0.10	0.10	ug/L	608	11-May-11	HV
Toxaphene	<5.0	5.0	ug/L	608	11-May-11	HV
PCB-1016	<1.0	1.0	ug/L	608	11-May-11	HV
PCB-1221	<1.0	1.0	ug/L	608	11-May-11	HV
PCB-1232	<1.0	1.0	ug/L	608	11-May-11	HV
PCB-1242	<1.0	1.0	ug/L	608	11-May-11	HV
PCB-1248	<1.0	1.0	ug/L	608	11-May-11	HV
PCB-1254	<1.0	1.0	ug/L	608	11-May-11	HV
PCB-1260	<1.0	1.0	ug/L	608	11-May-11	HV

Primary Laboratories, Inc.
Results

1-Jun-11

Date Sampled: 18-Apr-11
Work Order No: 1104141-01
Client ID: **North Anna Outfall 001**

Test Description	Final Result	Reporting Limit	Units of Measure	Method Numbers*	Date Analyzed	Tech. Initials
Organophosphorus Pesticides						
Demeton	<1	1	ug/L	622	6-May-11	SC**
Malathion	<1	1	ug/L	622	6-May-11	SC**
Chlorpyrifos	<0.2	0.2	ug/L	622	6-May-11	SC**
Parathion	<1	1	ug/L	622	6-May-11	SC**
Guthion	<1	1	ug/L	622	6-May-11	SC**
Diazinon	<1	1	ug/L	622	6-May-11	SC**

* All methods are Standard Methods 18th Edition unless otherwise noted.

** Analysis sub-contracted to James R. Reed & Associates.

Signature: _____ Date: 6-1-11
Parry L. Bragg
Laboratory Manager

These analytical results are based upon materials provided by the client and are intended for the exclusive use of the client. These analytical results represent the best judgement of Primary Laboratories, Inc. Primary Laboratories, Inc. assumes no responsibility, express or implied, as to the interpretation of the analytical results contained in this report. This report is not to be reproduced except with the written approval of Primary Laboratories, Inc

Tag - [illegible]

Location: North Anna	Requested by:	Priority:
Required Date: 5/13/11	Phone:	Date Analysis Complete:
Comment:	Sampled by: [illegible]	Date Approved Released:

1/04141

4-25

Bottle Types: Cn=Cyanide, FC=Fecals, EC = E coli, H_2S = Hydrogen sulfide, Asb = Asbestos, BOD=Biological Oxygen Demand
P/P=Pesticide / PCBs, TBT = Tributyltin

Preservatives: HCl=Hydrochloric acid, CS=Cu Sulfate, S=Sulfuric acid, N=Nitric acid, ZA=Zinc acetate, SH=Sodium Hydroxide

Tests Required 1= Cn, E coli, H_2S, Pest / PCBs,TBT, 1,2 Diphenylhydrazine, Cr6

Bottles pH<2 or >9
√

X - PLACE AN "X" IN THE BOX FOR SAMPLES TO BE SUBMITTED

System Lab Number	x	Sample ID	Sample Date	Sample Time	Comp	Grab	Cl_2 Screen [Cn,NH3, ABN,Vol]	Sulfide Screen [Cn]	Cn	FC	EC	H_2S	Cr6	BOD	P/P	TBT	1,2,Diphenylhydrazine					Test Required	Notes
Preservative									SH			ZA,SH											
		Outall 001	5/11/11	1015		X			1		1	2	1		2	2	1					1	Do Pest / PCBs per attached list For 1,2 Diphenylhydrazine, use Method 526 at QL = 0.1 ppb

Relinquished by: (Signature) [illegible]	Date 5/11/11	Time 12:15	Received by: (Signature) [illegible]	Date 5/12/11	Time [illegible]
Relinquished by: (Signature)	Date	Time	Received by: (Signature)	Date	Time

coc AppB NAnna 001.xls

Pace Analytical®
www.pacelabs.com

Pace Analytical Services, Inc.
1638 Roseytown Road - Suites 2,3,4
Greensburg, PA 15601
(724)850-5600

July 31, 2011

Mr. Glenn Bishop
Dominion Environmental Biology
4111 Castlewood Road
Richmond, VA 23234

RE: Project: North Anna 001
Pace Project No.: 3050675

Dear Mr. Bishop:
Enclosed are the analytical results for sample(s) received by the laboratory on July 22, 2011. The results relate only to the samples included in this report. Results reported herein conform to the most current TNI standards, where applicable, unless otherwise narrated in the body of the report.

If you have any questions concerning this report, please feel free to contact me.

Sincerely,

Jacquelyn Collins

jacquelyn.collins@pacelabs.com
Project Manager

Enclosures

This report shall not be reproduced, except in full,
without the written consent of Pace Analytical Services, Inc..

Pace Analytical Services, Inc.
1638 Roseytown Road - Suites 2,3,4
Greensburg, PA 15601
(724)850-5600

CERTIFICATIONS

Project: North Anna 001
Pace Project No.: 3050675

Pennsylvania Certification IDs
1638 Roseytown Road Suites 2,3&4, Greensburg, PA 15601
Alabama Certification #: 41590
Arizona Certification #: AZ0734
Arkansas Certification
California/NELAC Certification #: 04222CA
Colorado Certification
Connecticut Certification #: PH 0694
Delaware Certification
Florida/NELAC Certification #: E87683
Guam/PADEP Certification
Hawaii/PADEP Certification
Idaho Certification
Illinois/PADEP Certification
Indiana/PADEP Certification
Iowa Certification #: 391
Kansas/NELAC Certification #: E-10358
Kentucky Certification #: 90133
Louisiana/NELAC Certification #: LA080002
Louisiana/NELAC Certification #: 4086
Maine Certification #: PA0091
Maryland Certification #: 308
Massachusetts Certification #: M-PA1457
Michigan/PADEP Certification
Missouri Certification #: 235
Montana Certification #: Cert 0082
Nevada Certification
New Hampshire/NELAC Certification #: 2976
New Jersey/NELAC Certification #: PA 051
New Mexico Certification
New York/NELAC Certification #: 10888
North Carolina Certification #: 42706
Oregon/NELAC Certification #: PA200002
Pennsylvania/NELAC Certification #: 65-00282
Puerto Rico Certification #: PA01457
South Dakota Certification
Tennessee Certification #: TN2867
Texas/NELAC Certification #: T104704188-09 TX
Utah/NELAC Certification #: ANTE
Virgin Island/PADEP Certification
Virginia Certification #: 00112
Washington Certification #: C1941
West Virginia Certification #: 143
Wisconsin/PADEP Certification
Wyoming Certification #: 8TMS-Q

This report shall not be reproduced, except in full,
without the written consent of Pace Analytical Services, Inc..

Pace Analytical Services, Inc.
1638 Roseytown Road - Suites 2,3,4
Greensburg, PA 15601
(724)850-5600

SAMPLE SUMMARY

Project: North Anna 001
Pace Project No.: 3050675

Lab ID	Sample ID	Matrix	Date Collected	Date Received
3050675001	**North Anna 001**	Water	07/19/11 15:10	07/22/11 10:00

This report shall not be reproduced, except in full,
without the written consent of Pace Analytical Services, Inc..

Pace Analytical Services, Inc.
1638 Roseytown Road - Suites 2,3,4
Greensburg, PA 15601
(724)850-5600

SAMPLE ANALYTE COUNT

Project: North Anna 001
Pace Project No.: 3050675

Lab ID	Sample ID	Method	Analysts	Analytes Reported	Laboratory
3050675001	**North Anna 001**	EPA 900.0m	JC2	2	PASI-PA

This report shall not be reproduced, except in full,
without the written consent of Pace Analytical Services, Inc..

Pace Analytical Services, Inc.
1638 Roseytown Road - Suites 2,3,4
Greensburg, PA 15601
(724)850-5600

PROJECT NARRATIVE

Project: North Anna 001
Pace Project No.: 3050675

Method: **EPA 900.0m**
Description: 900.0 Gross Alpha/Beta
Client: Dominion Environmental Biology
Date: July 31, 2011

General Information:
1 sample was analyzed for EPA 900.0m. All samples were received in acceptable condition with any exceptions noted below.

Hold Time:
The samples were analyzed within the method required hold times with any exceptions noted below.

Method Blank:
All analytes were below the report limit in the method blank with any exceptions noted below.

Laboratory Control Spike:
All laboratory control spike compounds were within QC limits with any exceptions noted below.

Matrix Spikes:
All percent recoveries and relative percent differences (RPDs) were within acceptance criteria with any exceptions noted below.

Duplicate Sample:
All duplicate sample results were within method acceptance criteria with any exceptions noted below.

Additional Comments:

This data package has been reviewed for quality and completeness and is approved for release.

This report shall not be reproduced, except in full,
without the written consent of Pace Analytical Services, Inc..

Pace Analytical Services, Inc.
1638 Roseytown Road - Suites 2,3,4
Greensburg, PA 15601
(724)850-5600

ANALYTICAL RESULTS

Project: North Anna 001
Pace Project No.: 3050675

Sample: North Anna 001 **Lab ID: 3050675001** Collected: 07/19/11 15:10 Received: 07/22/11 10:00 Matrix: Water
PWS: Site ID: Sample Type:

Parameters	Method	Act ± Unc (MDC)	Units	Analyzed	CAS No.	Qual
Gross Alpha	EPA 900.0m	**0.733 ± 0.852 (1.65)**	pCi/L	07/26/11 12:55	12587-46-1	
Gross Beta	EPA 900.0m	**1.77 ± 1.33 (2.67)**	pCi/L	07/26/11 12:55	12587-47-2	

This report shall not be reproduced, except in full,
without the written consent of Pace Analytical Services, Inc..

Pace Analytical Services, Inc.
1638 Roseytown Road - Suites 2,3,4
Greensburg, PA 15601
(724)850-5600

QUALITY CONTROL DATA

Project: North Anna 001
Pace Project No.: 3050675

QC Batch: RADC/9036
QC Batch Method: EPA 900.0m
Analysis Method: EPA 900.0m
Analysis Description: 900.0 Gross Alpha/Beta
Associated Lab Samples: 3050675001

METHOD BLANK: 324319
Matrix: Water
Associated Lab Samples: 3050675001

Parameter	Act ± Unc (MDC)	Units	Analyzed	Qualifiers
Gross Alpha	-0.164 ± 0.796 (2.25)	pCi/L	07/26/11 12:57	
Gross Beta	-0.606 ± 0.796 (2.15)	pCi/L	07/26/11 12:57	

This report shall not be reproduced, except in full,
without the written consent of Pace Analytical Services, Inc..

Pace Analytical Services, Inc.
1638 Roseytown Road - Suites 2,3,4
Greensburg, PA 15601
(724)850-5600

QUALIFIERS

Project: North Anna 001
Pace Project No.: 3050675

DEFINITIONS

DF - Dilution Factor, if reported, represents the factor applied to the reported data due to changes in sample preparation, dilution of the sample aliquot, or moisture content.

ND - Not Detected at or above adjusted reporting limit.

J - Estimated concentration above the adjusted method detection limit and below the adjusted reporting limit.

MDL - Adjusted Method Detection Limit.

S - Surrogate

1,2-Diphenylhydrazine (8270 listed analyte) decomposes to Azobenzene.

Consistent with EPA guidelines, unrounded data are displayed and have been used to calculate % recovery and RPD values.

LCS(D) - Laboratory Control Sample (Duplicate)

MS(D) - Matrix Spike (Duplicate)

DUP - Sample Duplicate

RPD - Relative Percent Difference

NC - Not Calculable.

SG - Silica Gel - Clean-Up

U - Indicates the compound was analyzed for, but not detected.

N-Nitrosodiphenylamine decomposes and cannot be separated from Diphenylamine using Method 8270. The result reported for each analyte is a combined concentration.

Act - Activity

Unc - Uncertainty

(MDC) - Minimum Detectable Concentration

Pace Analytical is TNI accredited. Contact your Pace PM for the current list of accredited analytes.

LABORATORIES

PASI-PA Pace Analytical Services - Greensburg

This report shall not be reproduced, except in full,
without the written consent of Pace Analytical Services, Inc..

Pace Analytical™
www.pacelabs.com

CHAIN-OF-CUSTODY / Analytical Request Document

The Chain-of-Custody is a LEGAL DOCUMENT. All relevant fields must be completed accurately.

Section A Required Client Information:

Company:	Dominion Environmental Biology
Address:	4111 Castlewood Road
	Richmond, VA 23234
Email To:	glenn.bishop@dom.com
Phone: 804-350-6918	Fax: 888-342-0629
Requested Due Date/TAT:	Normal

Section B Required Project Information:

Report To:	Glenn Bishop
Copy To:	
Purchase Order No.:	Mastercard
Project Name:	
Project Number:	

Section C Invoice Information:

Attention:	Glenn Bishop
Company Name:	Dominion
Address:	4111 Castlewood Road 23234
Pace Quote Reference:	46012743
Pace Project Manager:	
Pace Profile #:	

REGULATORY AGENCY

☐ NPDES ☐ GROUND WATER ☐ DRINKING WATER
☐ UST ☐ RCRA ☐ OTHER _____

Site Location STATE: VA

Section D Required Client Information

SAMPLE ID (A-Z, 0-9 / ,-) Sample IDs MUST BE UNIQUE

Valid Matrix Codes

MATRIX	CODE
DRINKING WATER	DW
WATER	WT
WASTE WATER	WW
PRODUCT	P
SOL/SOLID	SL
OIL	OL
WIPE	WP
AIR	AR
OTHER	OT
TISSUE	TS

Requested Analysis Filtered (Y/N)

ITEM #	SAMPLE ID	MATRIX CODE (see valid codes to left)	SAMPLE TYPE (G=GRAB C=COMP)	COLLECTED COMPOSITE START DATE	COLLECTED COMPOSITE START TIME	COLLECTED COMPOSITE END/GRAB DATE	COLLECTED COMPOSITE END/GRAB TIME	SAMPLE TEMP AT COLLECTION	# OF CONTAINERS	Unpreserved	H_2SO_4	HNO_3	HCl	NaOH	$Na_2S_2O_3$	Methanol	Other	Analysis Test (Y/N)	Gross Alpha	Gross Beta	Strontium 90	Uranium		Tritium					Pace Project No./ Lab I.D.
1	North Anna 001		G	7/19/11	1510				1	X									X	X								001	Note: If Gross Alpha exceeds
2																													5 picocuries / liter, then analyze
3																													for Radium 226 and Radium 228
4																													
5																													
6																													
7																													
8																													
9																													
10																													
11																													
12																													

3050675

ADDITIONAL COMMENTS	RELINQUISHED BY / AFFILIATION	DATE	TIME	ACCEPTED BY / AFFILIATION	DATE	TIME	SAMPLE CONDITIONS
	WM	7/21/11	0900				
				[illegible]	7/22/11	100	

SAMPLER NAME AND SIGNATURE

PRINT Name of SAMPLER: Glenn Bishop

SIGNATURE of SAMPLER: WM

DATE Signed (MM/DD/YY): 7/21/11

Temp in °C | Received on Ice (Y/N) | Custody Sealed Cooler (Y/N) | Samples Intact (Y/N)

*Important Note: By signing this form you are accepting Pace's NET 30 day payment terms and agreeing to late charges of 1.5% per month for any invoices not paid within 30 days.

Sample Condition Upon Receipt

Pace Analytical

Client Name: Dominion Project # 30506175

Courier: ☐ Fed Ex ☐ UPS ☐ USPS ☐ Client ☐ Commercial ☐ Pace Other _____

Tracking #: 12 62V 975 01 9183 3253

Custody Seal on Cooler/Box Present: ☐ yes ☑ no Seals intact: ☐ yes ☐ no

Optional
Proj. Due Date:
Proj. Name:

Packing Material: ☐ Bubble Wrap ☐ Bubble Bags ☑ None ☐ Other _____

Thermometer Used 3 5 Type of Ice: Wet Blue None ☐ Samples on ice, cooling process has begun

Cooler Temperature NA Biological Tissue is Frozen: Yes No

Date and Initials of person examining contents: 7/22/11 RWS

Temp should be above freezing to 6°C

		Comments:
Chain of Custody Present:	☑Yes ☐No ☐N/A	1.
Chain of Custody Filled Out:	☑Yes ☐No ☐N/A	2.
Chain of Custody Relinquished:	☑Yes ☐No ☐N/A	3.
Sampler Name & Signature on COC:	☑Yes ☐No ☐N/A	4.
Samples Arrived within Hold Time:	☑Yes ☐No ☐N/A	5.
Short Hold Time Analysis (<72hr):	☐Yes ☑No ☐N/A	6.
Rush Turn Around Time Requested:	☐Yes ☑No ☐N/A	7.
Sufficient Volume:	☑Yes ☐No ☐N/A	8.
Correct Containers Used:	☑Yes ☐No ☐N/A	9.
-Pace Containers Used:	☐Yes ☑No ☐N/A	
Containers Intact:	☑Yes ☐No ☐N/A	10.
Filtered volume received for Dissolved tests	☐Yes ☐No ☑N/A	11.
Sample Labels match COC:	☑Yes ☐No ☐N/A	12.
-Includes date/time/ID/Analysis Matrix: WT		
All containers needing preservation have been checked.	☑Yes ☐No ☐N/A	13. 30ml's HNO3 @ 1320 7/22/11 RWS
All containers needing preservation are found to be in compliance with EPA recommendation.	☐Yes ☑No ☐N/A	
exceptions: VOA, coliform, TOC, O&G, WI-DRO (water)	☐Yes ☑No	Initial when completed RWS Lot # of added preservative RF11 0172 4
Samples checked for dechlorination:	☐Yes ☐No ☑N/A	14.
Headspace in VOA Vials (>6mm):	☐Yes ☐No ☑N/A	15.
Trip Blank Present:	☐Yes ☐No ☑N/A	16.
Trip Blank Custody Seals Present	☐Yes ☐No ☐N/A	
Pace Trip Blank Lot # (if purchased): _____		

Client Notification/ Resolution: Field Data Required? Y / N

Person Contacted: _____ Date/Time: _____

Comments/ Resolution: _____

Project Manager Review: _____ **Date:** 7/25/11

Note: Whenever there is a discrepancy affecting North Carolina compliance samples, a copy of this form will be sent to the North Carolina DEHNR Certification Office (i.e out of hold, incorrect preservative, out of temp, incorrect containers)

F-ALLC003-4 23Feb2010

Primary Laboratories, Inc.

7423 Lee Davis Road • Mechanicsville, VA 23111 • Telephone (804) 559-9004 • Fax (804) 559-9306

ANALYTICAL LABORATORY REPORT

3-Aug-11

Dominion Virginia Power
Attn: Glenn Bishop
4111 Castlewood Road
Richmond, Va. 23234

Date Received: 19-Jul-11
Date Sampled: 19-Jul-11
Work Order No: 1107152-01
Client ID: **North Anna PS- Outfall 001**

Test Description	Final Result	Reporting Limit	Units of Measure	Method Numbers*	Date Analyzed	Tech. Initials
HERBICIDES						
2,4-D	<0.010	0.010	mg/L	8151 A	1-Aug-11	HV
2,4,5-TP	<0.002	0.002	mg/L	SW-846 8151A	1-Aug-11	HV

Date Sampled: 19-Jul-11
Work Order No: 1107152-01
Client ID: **North Anna PS- Outfall 001**

Test Description	Final Result	Reporting Limit	Units of Measure	Method Numbers*	Date Analyzed	Tech. Initials
Organophosphorus Pesticides						
Demeton	<1	1	ug/L	622	27-Jul-11	SC**
Malathion	<1	1	ug/L	622	27-Jul-11	SC**
Chlorpyrifos	<0.2	0.2	ug/L	622	27-Jul-11	SC**
Parathion	<1	1	ug/L	622	27-Jul-11	SC**
Guthion	<1	1	ug/L	622	27-Jul-11	SC**
Diazinon	<1	1	ug/L	622	27-Jul-11	SC**

** Analysis sub-contracted to Reed & Associates

Primary Laboratories, Inc.
Results

3-Aug-11

Date Sampled: 19-Jul-11
Work Order No: 1107152-01
Client ID: **North Anna PS- Outfall 001**

Test Description	Final Result	Reporting Limit	Units of Measure	Method Numbers*	Date Analyzed	Tech. Initials
Pesticides						
Aldrin	<0.05	0.05	ug/L	EPA 608	3-Aug-11	HV
Chlordane	<0.20	0.20	ug/L	EPA 608	3-Aug-11	HV
Dieldrin	<0.10	0.10	ug/L	EPA 608	3-Aug-11	HV
4,4-DDT	<0.10	0.10	ug/L	EPA 608	3-Aug-11	HV
4,4-DDE	<0.10	0.10	ug/L	EPA 608	3-Aug-11	HV
4,4-DDD	<0.10	0.10	ug/L	EPA 608	3-Aug-11	HV
Endosulfan sulfate	<0.10	0.10	ug/L	EPA 608	3-Aug-11	HV
Endosulfan I	<0.10	0.10	ug/L	EPA 608	3-Aug-11	HV
Endosulfan II	<0.10	0.10	ug/L	EPA 608	3-Aug-11	HV
Endrin	<0.10	0.10	ug/L	EPA 608	3-Aug-11	HV
Alpha-BHC	<0.10	0.10	ug/L	EPA 608	3-Aug-11	HV
Beta-BHC	<0.10	0.10	ug/L	EPA 608	3-Aug-11	HV
Delta-BHC	<0.10	0.10	ug/L	EPA 608	3-Aug-11	HV
Gamma-BHC (Lindane)	<0.10	0.10	ug/L	EPA 608	3-Aug-11	HV
Heptachlor	<0.05	0.05	ug/L	EPA 608	3-Aug-11	HV
Endrin Aldehyde	<0.10	0.10	ug/L	EPA 608	3-Aug-11	HV
Heptachlor Epoxide	<0.10	0.10	ug/L	EPA 608	3-Aug-11	HV
Kepone	<0.10	0.10	ug/L	EPA 608	3-Aug-11	HV
Methoxychlor	<0.10	0.10	ug/L	EPA 608	3-Aug-11	HV
Mirex	<0.10	0.10	ug/L	EPA 608	3-Aug-11	HV
PCB-1016	<1.0	1.0	ug/L	EPA 608	3-Aug-11	HV
PCB-1221	<1.0	1.0	ug/L	EPA 608	3-Aug-11	HV
PCB-1232	<1.0	1.0	ug/L	EPA 608	3-Aug-11	HV
PCB-1242	<1.0	1.0	ug/L	EPA 608	3-Aug-11	HV
PCB-1248	<1.0	1.0	ug/L	EPA 608	3-Aug-11	HV
PCB-1254	<1.0	1.0	ug/L	EPA 608	3-Aug-11	HV
PCB-1260	<1.0	1.0	ug/L	EPA 608	3-Aug-11	HV
Toxaphene	<5.0	5.0	ug/L	EPA 608	3-Aug-11	HV

Primary Laboratories, Inc.
Results

3-Aug-11

Date Sampled: 19-Jul-11
Work Order No: 1107152-01
Client ID: **North Anna PS- Outfall 001**

Test Description	Final Result	Reporting Limit	Units of Measure	Method Numbers*	Date Analyzed	Tech. Initials
Cyanide	<0.01	0.01	mg/L	4500CN E	21-Jul-11	NA
Free Cyanide	<0.01	0.01	mg/L	4500CN E	21-Jul-11	NA
BOD	<3.0	3.0	mg/L	5210 B	20-Jul-11 at 12:00	NA
Sulfide	0.08	0.05	mg/L	4500S^{2-}E	26-Jul-11 at 9:10	NA
Hydrogen Sulfide	<0.05	0.05	mg/L	376.1	1-Aug-11	HV
Nonylphenol	<0.01	0.01	mg/L	8270C	21-Jul-11	HV
Hexavalent Chromium	<0.005	0.005	mg/L	3500	20-Jul-11 at 9:30	NA
Bromide	2.0	0.1	mg/L	Titrimetric	2-Aug-11	PB
Color	18.0	5.0	PCU	2120 B	21-Jul-11 at 9:00	NA
MBAS	<0.01	0.01	mg/L	5540C	21-Jul-11	HV
Metals						
Chromium	<0.02	0.02	mg/L	3120 B	28-Jul-11	HV

* All methods are Standard Methods 18th Edition unless otherwise noted.

Signature: Parry L. Bragg Date: 8/3/11
Parry L. Bragg
Laboratory Manager

These analytical results are based upon materials provided by the client and are intended for the exclusive use of the client. These analytical results represent the best judgement of Primary Laboratories, Inc. Primary Laboratories, Inc. assumes no responsibility, express or implied, as to the interpretation of the analytical results contained in this report. This report is not to be reproduced except with the written approval of Primary Laboratories, Inc.

Location: North Anna	Requested by:	Priority:
Required Date: 30 days	Phone:	Date Analysis Complete:
Comment:	Sampled by:	Date Approved Released:

Bottle Types: Cn=Cyanide, FC=Fecals, EC = E coli, H_2S = Hydrogen sulfide, Asb = Asbestos, BOD=Biological Oxygen Demand
P/P=Pesticide / PCBs, TBT = Tributyltin, R = Radioactivity, Br = Bromide, Color, Sul = sulfide, Sur = Surfactants, DS = Dioxin screen

Preservatives: HCl=Hydrochloric acid, CS=Cu Sulfate, S=Sulfuric acid, N=Nitric acid, ZA=Zinc acetate, SH=Sodium Hydroxide
A B C DE

Tests Required 1= Cn Free, BOD, Pest / PCBs, *Nonylphenol*, ~~[1,2,Diphenylhydrazine]~~
F 2 = *Cr3, Cr6* G
3= [Br, Color], Sulfide, Surfactants
H I J

1107152

X - PLACE AN "X" IN THE BOX FOR SAMPLES TO BE SUBMITTED

System Lab Number	x	Sample ID	Sample Date	Sample Time	Comp	Grab	Cl_2 Screen [Cn]	Dechlor cond immed?	Sulfide Screen [Cn]	Free Cn	FC	EC	H_2S	Asb	BOD	P/P	TBT	Nonylphenol	1,2,Diphenylhydrazine	Cr3, Cr6	Br, Color	Sul	Sur	DS	Test Required	Notes
Preservative										SH			ZA,SH									ZA,SH				
		Outall North Anna 001	7/14/11	1510		x	Pos / Neg	Yes / No	Pos / Neg	1					1	2		1		2	1	1	1		1,2,3	Pest / PCBs = Diazinon only ~~For 1,2 Diphenylhydrazine, use Method 526 at QL = 0.1 ppb~~

Relinquished by: (Signature) WMJ	Date 7/14/11 Time 1750	Received by: (Signature)	Date Time
Relinquished by: (Signature)	Date Time	Received by: (Signature) Rachel Summit	Date 7-19-11 Time 17:30

Primary Laboratories
7423 Lee Davis Road
Mechanicsville, VA 23111
804-559-9004

5.4°C

coc CPM NA 001.xlsx

DOMINION LABORATORY SERVICES

REPORT PRODUCED ON 09/15/2011

CERTIFICATE OF ANALYSIS TEST RESULTS BY SAMPLE

Location: NORTH ANNA

Submitter: GLENN BISHOP

System Laboratory Number: 391004
Description :OUTFALL 001

Sample Date: 07/19/2011

Parameter		Result	Method	Test Code	Analyst	Date Analyzed	Time Analyzed
Ammonia as N, PPM		0.04	SM18TH 4500NH3F	NH3	DAWNE01	07/28/2011	1642
Boron as B, PPM		0.04	SM18TH 4500-B B	B	DONNA13	08/03/2011	1100
COD, PPM		9.36	HACH 8000	COD	DONNA13	08/02/2011	1030
Fluoride as F, PPM		0.069	EPA 300	FIC	DAWNE01	08/04/2011	2056
NO3+NO2, PPM		0.03	EPA 353.2	NO3NO2	DAWNE01	07/21/2011	909
Oil and Grease, PPM	<	5.00	EPA 1664A	O&G	TANYA19	07/22/2011	930
Phenol, PPM		0.08	EPA 420.1	PHENOL	TANYA19	08/12/2011	1252
Sulfate as SO4, PPM		6.12	EPA 300	SO4IC	DAWNE01	08/04/2011	2056
TK Nitrogen as N,PPM		0.34	EPA 351.2	TKN	DONNA13	08/11/2011	1045
TOC, PPM		3.7	SM18TH 5310B	TOC	DONNA13	08/03/2011	1302
TSS, PPM		2.4	SM18TH 2540D	TSS	TANYA19	07/21/2011	1030
Total Phos. as P,PPM	<	0.05	SM18TH 4500-P	TP	TANYA19	08/11/2011	1325
Aluminum as Al, PPM		0.11	SM18TH 3111D	AL	DAWNE01	08/24/2011	1151
Antimony as Sb, ppb	<	1.	SM18TH 3113B	SBPPB	STEVE72	08/01/2011	951
Arsenic as As, ppb	<	3.	SM18TH 3113B	ASPPB	STEVE72	08/01/2011	844
Barium as Ba, ppb		19.	SM18TH 3113B	BAPPB	STEVE72	09/08/2011	1314
Beryllium as Be, ppb	<	0.2	SM18TH 3113B	BEPPB	STEVE72	09/13/2011	604
Cadmium as Cd, ppb	<	0.3	SM18TH 3113B	CDPPB	STEVE72	09/13/2011	1109
Chromium as Cr, ppb	<	1.	SM18TH 3113B	CRPPB	STEVE72	09/13/2011	1226
Cobalt as Co, ppb	<	0.6	SM18TH 3113B	COPPB	STEVE72	09/13/2011	618
Copper as Cu, ppb		2.	SM18TH 3113B	CUPPB	STEVE72	08/01/2011	1627
Iron as Fe, PPM		0.06	SM18TH 3111B	FE	DAWNE01	08/12/2011	957
Lead as Pb, ppb	<	1.	SM18TH 3113B	PBPPB	STEVE72	08/01/2011	1758
Magnesium as Mg, PPM		2.50	SM18TH 3111B	MG	DAWNE01	08/16/2011	1609
Manganese as Mn, PPM		0.06	SM18TH 3111B	MN	DAWNE01	08/12/2011	1046
Mercury as Hg, ppb	<	0.2	SM18TH 3112B	HGPPB	STEVE72	07/27/2011	743
Molybdenum as Mo,ppb		6.	SM18TH 3113B	MOPPB	STEVE72	09/09/2011	903
Nickel as Ni, ppb	<	5.	SM18TH 3113B	NIPPB	STEVE72	08/01/2011	1931
Selenium as Se, ppb	<	3.	SM18TH 3113B	SEPPB	STEVE72	08/01/2011	1030
Silver as Ag, ppb	<	0.1	SM18TH 3113B	AGPPB	STEVE72	09/09/2011	1034
Thallium as Tl, ppb	<	0.2	EPA 279.2	TLPPB	STEVE72	08/01/2011	1345
Tin as Sn, ppb	<	5.	SM18TH 3113B	SNPPB	STEVE72	09/06/2011	1006
Titanium as Ti, ppb	<	2.	EPA 283.2	TIPPB	STEVE72	09/13/2011	834
Zinc as Zn, PPM		0.026	SM18TH 3111B	ZN	DAWNE01	08/12/2011	1132
Dis. Tl, ppb	<	0.2	EPA 279.2	TLDISPPB	STEVE72	08/01/2011	1345
Dis. Ti, ppb	<	2.	EPA 283.2	TIDISPPB	STEVE72	09/13/2011	834
Dis. Sn, ppb	<	5.	SM18TH 3113B	SNDISPPB	STEVE72	09/06/2011	1006

DOMINION LABORATORY SERVICES

REPORT PRODUCED ON 09/15/2011

CERTIFICATE OF ANALYSIS TEST RESULTS BY SAMPLE

Location: NORTH ANNA

Submitter: GLENN BISHOP

System Laboratory Number: 391004
Description :OUTFALL 001

Sample Date: 07/19/2011

Parameter	Result	Method	Test Code	Analyst	Date Analyzed	Time Analyzed
Dis. Se, ppb	< 3.	SM18TH 3113B	SEDISPPB	STEVE72	08/01/2011	1030
Dis. Sb, ppb	< 1.	SM18TH 3113B	SBDISPPB	STEVE72	08/01/2011	951
Dis. Pb, ppb	< 1.	SM18TH 3113B	PBDISPPB	STEVE72	08/01/2011	1758
Dis. Ni, ppb	< 5.	SM18TH 3113B	NIDISPPB	STEVE72	08/01/2011	1931
Dis. Mo, ppb	6.	SM18TH 3113B	MODISPPB	STEVE72	09/09/2011	903
Dis. Hg, ppb	< 0.2	SM18TH 3112B	HGDISPPB	STEVE72	07/27/2011	743
Dis. Cu, ppb	1.	SM18TH 3113B	CUDISPPB	STEVE72	08/01/2011	1627
Dis. Cr, ppb	< 1.	SM18TH 3113B	CRDISPPB	STEVE72	09/13/2011	1226
Dis. Co, ppb	< 0.6	SM18TH 3113B	CODISPPB	STEVE72	09/13/2011	618
Dis. Cd, ppb	< 0.3	SM18TH 3113B	CDDISPPB	STEVE72	09/13/2011	1109
Dis. Be, ppb	< 0.2	SM18TH 3113B	BEDISPPB	STEVE72	09/13/2011	604
Dis. Ba, ppb	18.	SM18TH 3113B	BADISPPB	STEVE72	09/08/2011	1314
Dis. As, ppb	< 3.	SM18TH 3113B	ASDISPPB	STEVE72	08/01/2011	844
Dis. Ag, ppb	< 0.1	SM18TH 3113B	AGDISPPB	STEVE72	09/09/2011	1034
Dis. Zn, PPM	< 0.010	SM18TH 3111B	ZNDIS	DAWNE01	08/12/2011	1132
Dis. Mn, PPM	< 0.02	SM18TH 3111B	MNDIS	DAWNE01	08/12/2011	1046
Dis. Fe, PPM	< 0.05	SM18TH 3111B	FEDIS	DAWNE01	08/12/2011	957
Dis. Al, PPM	< 0.09	SM18TH 3111D	ALDIS	DAWNE01	08/24/2011	1151
Nitrate as N, PPM	< 0.01	EPA 353.2	NO3	DAWNE01	07/21/2011	909
T-Hard. as CaCO3,PPM	23.94	SM18TH 2340C	HARD	TANYA19	07/26/2011	930
2,4-D, ppb	< 10.00	EPA 615	8151GC	HERBE31	08/01/2011	
Silvex, ppb	< 2.00	EPA 615	8151GC	HERBE31	08/01/2011	
Chlorpyrifos, ppb	< 0.2000	EPA 622	ORGPHOS	HERBE31	07/27/2011	
Demeton, ppb	< 1.0000	EPA 622	ORGPHOS	HERBE31	07/27/2011	
Diazinon, ppb	< 1.0000	EPA 622	ORGPHOS	HERBE31	07/27/2011	
Guthion, ppb	< 1.0000	EPA 622	ORGPHOS	HERBE31	07/27/2011	
Malathion, ppb	< 1.0000	EPA 622	ORGPHOS	HERBE31	07/27/2011	
Parathion, ppb	< 1.0000	EPA 622	ORGPHOS	HERBE31	07/27/2011	
Aldrin, ppb	< 0.050	EPA 608	608GC	HERBE31	08/03/2011	
Chlordane, ppb	< 0.200	EPA 608	608GC	HERBE31	08/03/2011	
Dieldrin, ppb	< 0.100	EPA 608	608GC	HERBE31	08/03/2011	
4,4-DDT, ppb	< 0.100	EPA 608	608GC	HERBE31	08/03/2011	
4,4-DDE, ppb	< 0.100	EPA 608	608GC	HERBE31	08/03/2011	
4,4-DDD, ppb	< 0.100	EPA 608	608GC	HERBE31	08/03/2011	
Endosulfan Sulfate, ppb	< 0.100	EPA 608	608GC	HERBE31	08/03/2011	
Endosulfan I, ppb	< 0.100	EPA 608	608GC	HERBE31	08/03/2011	
Endosulfan II, ppb	< 0.100	EPA 608	608GC	HERBE31	08/03/2011	

DOMINION LABORATORY SERVICES

REPORT PRODUCED ON 09/15/2011

CERTIFICATE OF ANALYSIS TEST RESULTS BY SAMPLE

Location: NORTH ANNA

Submitter: GLENN BISHOP

System Laboratory Number: 391004
Description :OUTFALL 001

Sample Date: 07/19/2011

Parameter	Result	Method	Test Code	Analyst	Date Analyzed	Time Analyzed
Endrin, ppb	< 0.100	EPA 608	608GC	HERBE31	08/03/2011	
Alpha-BHC, ppb	< 0.100	EPA 608	608GC	HERBE31	08/03/2011	
Beta-BHC, ppb	< 0.100	EPA 608	608GC	HERBE31	08/03/2011	
Delta-BHC, ppb	< 0.100	EPA 608	608GC	HERBE31	08/03/2011	
Gamma-BHC (Lindane), ppb	< 0.100	EPA 608	608GC	HERBE31	08/03/2011	
Heptachlor, ppb	< 0.050	EPA 608	608GC	HERBE31	08/03/2011	
Kepone, ppb	< 0.100	EPA 608	608GC	HERBE31	08/03/2011	
Methoxychlor, ppb	< 0.100	EPA 608	608GC	HERBE31	08/03/2011	
Mirex, ppb	< 0.100	EPA 608	608GC	HERBE31	08/03/2011	
Endrin Aldehyde, ppb	< 0.100	EPA 608	608GC	HERBE31	08/03/2011	
Heptachlor Epoxide, ppb	< 0.100	EPA 608	608GC	HERBE31	08/03/2011	
Toxaphene, ppb	< 5.000	EPA 608	608GC	HERBE31	08/03/2011	
Cyanide as CN, PPM	< 0.010	SM 4500CN E	CN	HERBE31	07/21/2011	
BOD, PPM	< 3.00	SM 5210 B	BOD	HERBE31	07/20/2011	1200
Sulfide, PPM	0.08	SM18TH 4500S 2 E	SULFID	HERBE31	07/26/2011	910
Hydrogen Sulfide, PPM	< 0.05	EPA 376.1	HYDSULF	HERBE31	08/01/2011	
Nonylphenol, ppb	< 10.0	EPA 8270C	NONYLPNL	HERBE31	07/21/2011	
Chrom. +6 as Cr6,PPM	< 0.005	SM 3500-CR D	CR6	HERBE31	07/20/2011	930
Bromide as Br, PPM	2.00	EPA 320.1	BR	HERBE31	08/02/2011	
Color, PCU	18.0	SM18TH 2120B	CLR	HERBE31	07/21/2011	900
MBAS as LAS, PPM	< 0.010	SM 5540C	SURF	HERBE31	07/21/2011	
Arochlor 1016, ppb	< 1.0	EPA 608	608PCB	HERBE31	08/03/2011	
Arochlor 1221, ppb	< 1.0	EPA 608	608PCB	HERBE31	08/03/2011	
Arochlor 1232, ppb	< 1.0	EPA 608	608PCB	HERBE31	08/03/2011	
Arochlor 1242, ppb	< 1.0	EPA 608	608PCB	HERBE31	08/03/2011	
Arochlor 1248, ppb	< 1.0	EPA 608	608PCB	HERBE31	08/03/2011	
Arochlor 1254, ppb	< 1.0	EPA 608	608PCB	HERBE31	08/03/2011	
Arochlor 1260, ppb	< 1.0	EPA 608	608PCB	HERBE31	08/03/2011	
Chromium as Cr, PPM	< 0.02	SM18TH 3120B	CR-ICP	HERBE31	07/28/2011	
Dis. Mg, PPM	2.45	SM18TH 3111B	MGDIS	DAWNE01	08/16/2011	1609
Gross Alpha, pCi/L	< 1.650	EPA 900.0	RADIO	HERBE31	07/26/2011	1255
Gross Beta, pCi/L	< 2.670	EPA 900.0	RADIO	HERBE31	07/26/2011	1255

WO# 418571

Location:	North Anna PS	Requested by:	Glen Bishop	Priority:	4
Required Date: 60 days	9/16/11	Phone:		Date Analysis Complete:	9-7-11
Comment:		Sampled by:	WGB	Date Approved Released:	8-15-11

Bottle Types: O/G=Oil and Grease, PT=Phenols Total, V=Volatiles, M=Metals, A=[Ammonia,TKN,TP,COD,NO_3/NO_2], BOD=Biological Oxygen Demand
TOC=Total Organic Carbon, TSS=[Total Suspended Solids,B,F,NO_3/NO_2,SO_4,~~TDS,Chloride~~]
ABN=Acid Base Neutrals, PP=Pesticide/PCBs

Preservatives: HCl=Hydrochloric acid, CS=Cu Sulfate, S=Sulfuric acid, N=Nitric acid, ZA=Zinc acetate, SH=Sodium Hydroxide

Tests Required 1= O/G, Phenol total, [Ammonia, TKN, TP, COD, NO_3/NO_2], TOC
2= [TSS, B, F, NO_3/NO_2, *Nitrate N*, SO_4]

NOTE:

Consider:
Flow

4= TR and Diss Metals Al,Ba,Co,Fe,Mg,Mo,Mn,Sn,Ti,Sb,As,Be,Cd,Cr,Cu,Pb,Hg,Ni,Se,Ag,Tl,Zn + Hardness

X - PLACE AN "X" IN THE BOX FOR SAMPLES TO BE SUBMITTED

System Lab Number	x	Sample ID	Sample Date	Sample Time	Comp	Grab	Cl_2 Screen [ABN,Vol]	Dechlor conf limod?	Project Code	O/G (HCl)	PT (CS,S)	V (HCl)	M (N)	A (S)	BOD	TOC (HCl)	TSS	ABN	P/P	Test Required	Notes
391004X		Outfall 001	7/7/11	1510		x			Cost	1	1		2	1		1	1			1,2,4	
		~~Equip blank~~				x							1								

Relinquished by: (Signature)	Date 7/20/11 Time 0810	Received by: (Signature)	Date 7/20/11 Time 0810
Relinquished by: (Signature)	Date Time	Received by: (Signature)	Date Time

Dominion Resources
Laboratory Services
11202 Old Stage Road
Chester, VA 23836

Dominion Laboratory Login Checklist

Station/Study: NA		WO#: 48571	
Thermometer Used: 61951674 or 61951693		Temp: 6.3°C	
	Type of Ice: Wet Blue None		
Chain of Custody Present	Yes	No	N/A
Chain of Custody Filled Out	Yes	No	N/A
Chain of Custody Relinquished	Yes	No	N/A
Sampler Name on COC	Yes	No	N/A
Samples Labels match COC	Yes	No	N/A
Includes date/time/ID/Analysis	Yes	No	N/A
All entries in Ink	Yes	No	N/A
Samples Arrived within Holding Time	Yes	No	N/A
Short Hold Time Analysis (<72hr)	Yes	No	N/A
Rush Turn Around Time Requested	Yes	No	N/A
Sufficient Volume	Yes	No	N/A
Correct Containers Used	Yes	No	N/A
Containers Used: (circle)	NH3	Solids	O&G
	TOC	OPO4	ABN
	IC	DRO	Phenol
	Hardness	Radioactivity	Volatiles
	Grain Size	Metals (Total or Dissolved)	
	Other:		
# of Bottles on COC correct	Yes	No	N/A
Filtered Volume received for Dissolved Tests	Yes	No	N/A
Custody Seal Intact	Yes	No	N/A
Date/Time Received: 7/20/11 @810			
Received by: TM2			
Due Date on COC match worksheet	Yes	No	N/A
Tests Required on COC match worksheet	Yes	No	N/A
Verified by: [signature]		Date: 7/20/11	

Pace Analytical®
www.pacelabs.com

Pace Analytical Services, Inc.
1638 Roseytown Road - Suites 2,3,4
Greensburg, PA 15601
(724)850-5600

July 31, 2011

Mr. Glenn Bishop
Dominion Environmental Biology
4111 Castlewood Road
Richmond, VA 23234

RE: Project: North Anna 104
Pace Project No.: 3050678

Dear Mr. Bishop:
Enclosed are the analytical results for sample(s) received by the laboratory on July 22, 2011. The results relate only to the samples included in this report. Results reported herein conform to the most current TNI standards, where applicable, unless otherwise narrated in the body of the report.

If you have any questions concerning this report, please feel free to contact me.

Sincerely,

Jacquelyn Collins

jacquelyn.collins@pacelabs.com
Project Manager

Enclosures

This report shall not be reproduced, except in full,
without the written consent of Pace Analytical Services, Inc..

Pace Analytical Services, Inc.
1638 Roseytown Road - Suites 2,3,4
Greensburg, PA 15601
(724)850-5600

CERTIFICATIONS

Project: North Anna 104
Pace Project No.: 3050678

Pennsylvania Certification IDs
1638 Roseytown Road Suites 2,3&4, Greensburg, PA 15601
Alabama Certification #: 41590
Arizona Certification #: AZ0734
Arkansas Certification
California/NELAC Certification #: 04222CA
Colorado Certification
Connecticut Certification #: PH 0694
Delaware Certification
Florida/NELAC Certification #: E87683
Guam/PADEP Certification
Hawaii/PADEP Certification
Idaho Certification
Illinois/PADEP Certification
Indiana/PADEP Certification
Iowa Certification #: 391
Kansas/NELAC Certification #: E-10358
Kentucky Certification #: 90133
Louisiana/NELAC Certification #: LA080002
Louisiana/NELAC Certification #: 4086
Maine Certification #: PA0091
Maryland Certification #: 308
Massachusetts Certification #: M-PA1457
Michigan/PADEP Certification
Missouri Certification #: 235
Montana Certification #: Cert 0082
Nevada Certification
New Hampshire/NELAC Certification #: 2976
New Jersey/NELAC Certification #: PA 051
New Mexico Certification
New York/NELAC Certification #: 10888
North Carolina Certification #: 42706
Oregon/NELAC Certification #: PA200002
Pennsylvania/NELAC Certification #: 65-00282
Puerto Rico Certification #: PA01457
South Dakota Certification
Tennessee Certification #: TN2867
Texas/NELAC Certification #: T104704188-09 TX
Utah/NELAC Certification #: ANTE
Virgin Island/PADEP Certification
Virginia Certification #: 00112
Washington Certification #: C1941
West Virginia Certification #: 143
Wisconsin/PADEP Certification
Wyoming Certification #: 8TMS-Q

This report shall not be reproduced, except in full,
without the written consent of Pace Analytical Services, Inc..

Pace Analytical Services, Inc.
1638 Roseytown Road - Suites 2,3,4
Greensburg, PA 15601
(724)850-5600

SAMPLE SUMMARY

Project: North Anna 104
Pace Project No.: 3050678

Lab ID	Sample ID	Matrix	Date Collected	Date Received
3050678001	**North Anna 104**	Water	07/19/11 14:00	07/22/11 10:00

This report shall not be reproduced, except in full,
without the written consent of Pace Analytical Services, Inc..

Pace Analytical Services, Inc.
1638 Roseytown Road - Suites 2,3,4
Greensburg, PA 15601
(724)850-5600

SAMPLE ANALYTE COUNT

Project: North Anna 104
Pace Project No.: 3050678

Lab ID	Sample ID	Method	Analysts	Analytes Reported	Laboratory
3050678001	**North Anna 104**	EPA 900.0m	JC2	2	PASI-PA

This report shall not be reproduced, except in full,
without the written consent of Pace Analytical Services, Inc..

Pace Analytical Services, Inc.
1638 Roseytown Road - Suites 2,3,4
Greensburg, PA 15601
(724)850-5600

PROJECT NARRATIVE

Project: North Anna 104
Pace Project No.: 3050678

Method: **EPA 900.0m**
Description: 900.0 Gross Alpha/Beta
Client: Dominion Environmental Biology
Date: July 31, 2011

General Information:
1 sample was analyzed for EPA 900.0m. All samples were received in acceptable condition with any exceptions noted below.

Hold Time:
The samples were analyzed within the method required hold times with any exceptions noted below.

Method Blank:
All analytes were below the report limit in the method blank with any exceptions noted below.

Laboratory Control Spike:
All laboratory control spike compounds were within QC limits with any exceptions noted below.

Matrix Spikes:
All percent recoveries and relative percent differences (RPDs) were within acceptance criteria with any exceptions noted below.

Duplicate Sample:
All duplicate sample results were within method acceptance criteria with any exceptions noted below.

Additional Comments:

This data package has been reviewed for quality and completeness and is approved for release.

This report shall not be reproduced, except in full,
without the written consent of Pace Analytical Services, Inc..

Pace Analytical Services, Inc.
1638 Roseytown Road - Suites 2,3,4
Greensburg, PA 15601
(724)850-5600

ANALYTICAL RESULTS

Project: North Anna 104
Pace Project No.: 3050678

Sample: North Anna 104 **Lab ID: 3050678001** Collected: 07/19/11 14:00 Received: 07/22/11 10:00 Matrix: Water
PWS: Site ID: Sample Type:

Parameters	Method	Act ± Unc (MDC)	Units	Analyzed	CAS No.	Qual
Gross Alpha	EPA 900.0m	**-0.068 ± 0.777 (2.35)**	pCi/L	07/26/11 12:55	12587-46-1	
Gross Beta	EPA 900.0m	**5.00 ± 1.91 (2.84)**	pCi/L	07/26/11 12:55	12587-47-2	

This report shall not be reproduced, except in full,
without the written consent of Pace Analytical Services, Inc..

Pace Analytical Services, Inc.
1638 Roseytown Road - Suites 2,3,4
Greensburg, PA 15601
(724)850-5600

QUALITY CONTROL DATA

Project: North Anna 104
Pace Project No.: 3050678

QC Batch: RADC/9036
QC Batch Method: EPA 900.0m
Analysis Method: EPA 900.0m
Analysis Description: 900.0 Gross Alpha/Beta
Associated Lab Samples: 3050678001

METHOD BLANK: 324319
Matrix: Water
Associated Lab Samples: 3050678001

Parameter	Act ± Unc (MDC)	Units	Analyzed	Qualifiers
Gross Alpha	-0.164 ± 0.796 (2.25)	pCi/L	07/26/11 12:57	
Gross Beta	-0.606 ± 0.796 (2.15)	pCi/L	07/26/11 12:57	

This report shall not be reproduced, except in full,
without the written consent of Pace Analytical Services, Inc..

Pace Analytical Services, Inc.
1638 Roseytown Road - Suites 2,3,4
Greensburg, PA 15601
(724)850-5600

QUALIFIERS

Project: North Anna 104
Pace Project No.: 3050678

DEFINITIONS

DF - Dilution Factor, if reported, represents the factor applied to the reported data due to changes in sample preparation, dilution of the sample aliquot, or moisture content.

ND - Not Detected at or above adjusted reporting limit.

J - Estimated concentration above the adjusted method detection limit and below the adjusted reporting limit.

MDL - Adjusted Method Detection Limit.

S - Surrogate

1,2-Diphenylhydrazine (8270 listed analyte) decomposes to Azobenzene.

Consistent with EPA guidelines, unrounded data are displayed and have been used to calculate % recovery and RPD values.

LCS(D) - Laboratory Control Sample (Duplicate)

MS(D) - Matrix Spike (Duplicate)

DUP - Sample Duplicate

RPD - Relative Percent Difference

NC - Not Calculable.

SG - Silica Gel - Clean-Up

U - Indicates the compound was analyzed for, but not detected.

N-Nitrosodiphenylamine decomposes and cannot be separated from Diphenylamine using Method 8270. The result reported for each analyte is a combined concentration.

Act - Activity

Unc - Uncertainty

(MDC) - Minimum Detectable Concentration

Pace Analytical is TNI accredited. Contact your Pace PM for the current list of accredited analytes.

LABORATORIES

PASI-PA Pace Analytical Services - Greensburg

This report shall not be reproduced, except in full,
without the written consent of Pace Analytical Services, Inc..

Pace Analytical
www.pacelabs.com

CHAIN-OF-CUSTODY / Analytical Request Document

The Chain-of-Custody is a LEGAL DOCUMENT. All relevant fields must be completed accurately.

Page: 1 of 1

Section A Required Client Information:

Company:	Dominion Environmental Biology
Address:	4111 Castlewood Road
	Richmond, VA 23234
Email To:	glenn.bishop@dom.com
Phone: 804-350-6918	Fax: 888-342-0629
Requested Due Date/TAT:	Normal

Section B Required Project Information:

Report To:	Glenn Bishop
Copy To:	
Purchase Order No.:	Mastercard
Project Name:	
Project Number:	

Section C Invoice Information:

Attention:	Glenn Bishop
Company Name:	Dominion
Address:	4111 Castlewood Road 23234
Pace Quote Reference:	46012743
Pace Project Manager:	
Pace Profile #:	

REGULATORY AGENCY

☐ NPDES ☐ GROUND WATER ☐ DRINKING WATER
☐ UST ☐ RCRA ☐ OTHER _____

Site Location STATE: VA

Section D Required Client Information

Valid Matrix Codes

MATRIX	CODE
DRINKING WATER	DW
WATER	WT
WASTE WATER	WW
PRODUCT	P
SOIL/SOLID	SL
OIL	OL
WIPE	WP
AIR	AR
OTHER	OT
TISSUE	TS

SAMPLE ID (A-Z, 0-9 / ,-) Sample IDs MUST BE UNIQUE

Requested Analysis Filtered (Y/N)

ITEM #	SAMPLE ID	MATRIX CODE (see valid codes to left)	SAMPLE TYPE (G=GRAB C=COMP)	COLLECTED COMPOSITE START DATE	COLLECTED COMPOSITE START TIME	COLLECTED COMPOSITE END/GRAB DATE	COLLECTED COMPOSITE END/GRAB TIME	SAMPLE TEMP AT COLLECTION	# OF CONTAINERS	Unpreserved	H_2SO_4	HNO_3	HCl	NaOH	$Na_2S_2O_3$	Methanol	Other	Gross Alpha	Gross Beta	Strontium 90	Uranium	Tritium	Pace Project No./ Lab I.D.
1	North Anna ~~012~~ 104		G	7/19/11		1400			1	X								X	X				30506 78
2																							
3																							
4																							
5																							
6																							
7																							
8																							
9																							
10																							
11																							
12																							

Note: If Gross Alpha exceeds 5 picocuries / liter, then analyze for Radium 226 and Radium 228

ADDITIONAL COMMENTS	RELINQUISHED BY / AFFILIATION	DATE	TIME	ACCEPTED BY / AFFILIATION	DATE	TIME	SAMPLE CONDITIONS			
	WMB	7/21/11	0900	Kelly Harbaugh	7/22/11	1000	ok	N	N	Y

SAMPLER NAME AND SIGNATURE

PRINT Name of SAMPLER: Glenn Bishop

SIGNATURE of SAMPLER: WMB DATE Signed (MM/DD/YY): 7/21/11

Temp in °C | Received on Ice (Y/N) | Custody Sealed Cooler (Y/N) | Samples Intact (Y/N)

*Important Note: By signing this form you are accepting Pace's NET 30 day payment terms and agreeing to late charges of 1.5% per month for any invoices not paid within 30 days.

Sample Condition Upon Receipt

Pace Analytical

Client Name: Dominion Project # 3050678

Courier: ☐ Fed Ex ☑ UPS ☐ USPS ☐ Client ☐ Commercial ☐ Pace Other _____

Tracking #: 1Z 62V 975 01 9373 3232

Custody Seal on Cooler/Box Present: ☐ yes ☑ no Seals intact: ☐ yes ☐ no

Optional
Proj. Due Date:
Proj. Name:

Packing Material: ☐ Bubble Wrap ☐ Bubble Bags ☑ None ☐ Other _____

Thermometer Used 3 5 Type of Ice: Wet Blue None ☐ Samples on ice, cooling process has begun

Cooler Temperature N A Biological Tissue is Frozen: Yes No

Date and Initials of person examining contents: 7/22/11 RW

Temp should be above freezing to 6°C

				Comments:
Chain of Custody Present:	☑Yes	☐No	☐N/A	1.
Chain of Custody Filled Out:	☑Yes	☐No	☐N/A	2.
Chain of Custody Relinquished:	☑Yes	☐No	☐N/A	3.
Sampler Name & Signature on COC:	☑Yes	☐No	☐N/A	4.
Samples Arrived within Hold Time:	☑Yes	☐No	☐N/A	5.
Short Hold Time Analysis (<72hr):	☐Yes	☑No	☐N/A	6.
Rush Turn Around Time Requested:	☐Yes	☑No	☐N/A	7.
Sufficient Volume:	☑Yes	☐No	☐N/A	8.
Correct Containers Used:	☑Yes	☐No	☐N/A	9.
-Pace Containers Used:	☐Yes	☑No	☐N/A	
Containers Intact:	☑Yes	☐No	☐N/A	10.
Filtered volume received for Dissolved tests	☐Yes	☐No	☑N/A	11.
Sample Labels match COC:	☑Yes	☐No	☐N/A	12.
-Includes date/time/ID/Analysis Matrix: WT				
All containers needing preservation have been checked.	☑Yes	☐No	☐N/A	13. 30 ml's HNO_3 1321 7/22/11 RW
All containers needing preservation are found to be in compliance with EPA recommendation.	☐Yes	☑No	☐N/A	
exceptions: VOA, coliform, TOC, O&G, WI-DRO (water)	☐Yes	☑No		Initial when completed RW Lot # of added preservative RF 11 04 47
Samples checked for dechlorination:	☐Yes	☐No	☑N/A	14.
Headspace in VOA Vials (>6mm):	☐Yes	☐No	☑N/A	15.
Trip Blank Present:	☐Yes	☐No	☑N/A	16.
Trip Blank Custody Seals Present	☐Yes	☐No	☑N/A	
Pace Trip Blank Lot # (if purchased):				

0117-2

RW 7/22/11

Client Notification/ Resolution: Field Data Required? Y / N

Person Contacted: _____ Date/Time: _____

Comments/ Resolution: _____

Project Manager Review: _____ **Date:** 7/25/11

Note: Whenever there is a discrepancy affecting North Carolina compliance samples, a copy of this form will be sent to the North Carolina DEHNR Certification Office (i.e out of hold, incorrect preservative, out of temp, incorrect containers)

F-ALLC003-4 23Feb2010

Primary Laboratories, Inc.

7423 Lee Davis Road • Mechanicsville, VA 23111 • Telephone (804) 559-9004 • Fax (804) 559-9306

ANALYTICAL LABORATORY REPORT

3-Aug-11

Dominion Virginia Power
Attn: Glenn Bishop
4111 Castlewood Road
Richmond, Va. 23234

Date Received: 19-Jul-11
Date Sampled: 19-Jul-11
Work Order No: 1107151-01
Client ID: **North Anna PS- Outfall 104**

Test Description	Final Result	Reporting Limit	Units of Measure	Method Numbers*	Date Analyzed	Tech. Initials
HERBICIDES						
2,4-D	<0.010	0.010	mg/L	8151 A	1-Aug-11	HV
2,4,5-TP	<0.002	0.002	mg/L	SW-846 8151A	1-Aug-11	HV

Date Sampled: 19-Jul-11
Work Order No: 1107151-01
Client ID: **North Anna PS- Outfall 104**

Test Description	Final Result	Reporting Limit	Units of Measure	Method Numbers*	Date Analyzed	Tech. Initials
Organophosphorus Pesticides						
Demeton	<1	1	ug/L	622	27-Jul-11	SC**
Malathion	<1	1	ug/L	622	27-Jul-11	SC**
Chlorpyrifos	<0.2	0.2	ug/L	622	27-Jul-11	SC**
Parathion	<1	1	ug/L	622	27-Jul-11	SC**
Guthion	<1	1	ug/L	622	27-Jul-11	SC**
Diazinon	<1	1	ug/L	622	27-Jul-11	SC**

** Analysis sub-contracted to Reed & Associates

Primary Laboratories, Inc.
Results

3-Aug-11

Date Sampled: 19-Jul-11
Work Order No: 1107151-01
Client ID: **North Anna PS- Outfall 104**

Test Description	Final Result	Reporting Limit	Units of Measure	Method Numbers*	Date Analyzed	Tech. Initials
Pesticides						
Aldrin	<0.05	0.05	ug/L	EPA 608	3-Aug-11	HV
Chlordane	<0.20	0.20	ug/L	EPA 608	3-Aug-11	HV
Dieldrin	<0.10	0.10	ug/L	EPA 608	3-Aug-11	HV
4,4-DDT	<0.10	0.10	ug/L	EPA 608	3-Aug-11	HV
4,4-DDE	<0.10	0.10	ug/L	EPA 608	3-Aug-11	HV
4,4-DDD	<0.10	0.10	ug/L	EPA 608	3-Aug-11	HV
Endosulfan sulfate	<0.10	0.10	ug/L	EPA 608	3-Aug-11	HV
Endosulfan I	<0.10	0.10	ug/L	EPA 608	3-Aug-11	HV
Endosulfan II	<0.10	0.10	ug/L	EPA 608	3-Aug-11	HV
Endrin	<0.10	0.10	ug/L	EPA 608	3-Aug-11	HV
Alpha-BHC	<0.10	0.10	ug/L	EPA 608	3-Aug-11	HV
Beta-BHC	<0.10	0.10	ug/L	EPA 608	3-Aug-11	HV
Delta-BHC	<0.10	0.10	ug/L	EPA 608	3-Aug-11	HV
Gamma-BHC (Lindane)	<0.10	0.10	ug/L	EPA 608	3-Aug-11	HV
Heptachlor	<0.05	0.05	ug/L	EPA 608	3-Aug-11	HV
Endrin Aldehyde	<0.10	0.10	ug/L	EPA 608	3-Aug-11	HV
Heptachlor Epoxide	<0.10	0.10	ug/L	EPA 608	3-Aug-11	HV
Kepone	<0.10	0.10	ug/L	EPA 608	3-Aug-11	HV
Methoxychlor	<0.10	0.10	ug/L	EPA 608	3-Aug-11	HV
Mirex	<0.10	0.10	ug/L	EPA 608	3-Aug-11	HV
PCB-1016	<1.0	1.0	ug/L	EPA 608	3-Aug-11	HV
PCB-1221	<1.0	1.0	ug/L	EPA 608	3-Aug-11	HV
PCB-1232	<1.0	1.0	ug/L	EPA 608	3-Aug-11	HV
PCB-1242	<1.0	1.0	ug/L	EPA 608	3-Aug-11	HV
PCB-1248	<1.0	1.0	ug/L	EPA 608	3-Aug-11	HV
PCB-1254	<1.0	1.0	ug/L	EPA 608	3-Aug-11	HV
PCB-1260	<1.0	1.0	ug/L	EPA 608	3-Aug-11	HV
Toxaphene	<5.0	5.0	ug/L	EPA 608	3-Aug-11	HV

Primary Laboratories, Inc.
Results

3-Aug-11

Date Sampled: 19-Jul-11
Work Order No: 1107151-01
Client ID: **North Anna PS- Outfall 104**

Test Description	Final Result	Reporting Limit	Units of Measure	Method Numbers*	Date Analyzed	Tech. Initials
Cyanide	<0.01	0.01	mg/L	4500CN E	21-Jul-11	NA
Free Cyanide	<0.01	0.01	mg/L	4500CN E	21-Jul-11	NA
BOD	<3.0	3.0	mg/L	5210 B	20-Jul-11 at 12:00	NA
Sulfide	<0.05	0.05	mg/L	$4500S^{2-}E$	26-Jul-11 at 9:10	NA
Hydrogen Sulfide	<0.05	0.05	mg/L	376.1	1-Aug-11	HV
Nonylphenol	<0.01	0.01	mg/L	8270C	21-Jul-11	HV
Hexavalent Chromium	<0.005	0.005	mg/L	3500	20-Jul-11 at 9:30	NA
Bromide	8.80	0.01	mg/L	Titrimetric	2-Aug-11	PB
Color	15.0	5.0	PCU	2120 B	21-Jul-11 at 9:00	NA
MBAS	<0.01	0.01	mg/L	5540C	21-Jul-11	HV
Metals						
Chromium	<0.02	0.02	mg/L	3120 B	28-Jul-11	HV

* All methods are Standard Methods 18th Edition unless otherwise noted.

Signature: Parry L. Bragg
Laboratory Manager

Date: 8/3/11

These analytical results are based upon materials provided by the client and are intended for the exclusive use of the client. These analytical results represent the best judgement of Primary Laboratories, Inc. Primary Laboratories, Inc. assumes no responsibility, express or implied, as to the interpretation of the analytical results contained in this report. This report is not to be reproduced except with the written approval of Primary Laboratories, Inc.

Location:	North Anna PS	Requested by:	Priority:
Required Date:	30 days	Phone:	Date Analysis Complete:
Comment:		Sampled by:	Date Approved Released:

Bottle Types: Cn=Cyanide, FC=Fecals, EC = E coli, H_2S = Hydrogen sulfide, Asb = Asbestos, BOD=Biological Oxygen Demand
P/P=Pesticide / PCBs, TBT = Tributyltin, R = Radioactivity, Br = Bromide, Color, Sul = sulfide, Sur = Surfactants, DS = Dioxin screen

Preservatives: HCl=Hydrochloric acid, CS=Cu Sulfate, S=Sulfuric acid, N=Nitric acid, ZA=Zinc acetate, SH=Sodium Hydroxide

Tests Required 1= Cn, Free Cn, H_2S, BOD, Pest / PCBs, *Nonylphenol*, [1,2,Diphenylhydrazine]
2 = *Cr3, Cr6*
3= [Br, Color], Sulfide, Surfactants

1107151

X - PLACE AN "X" IN THE BOX FOR SAMPLES TO BE SUBMITTED

System Lab Number	X	Sample ID	Sample Date	Sample Time	Comp	Grab	Cl_2 Screen [Cn]	Dechlor confirmed?	Sulfide Screen [Cn]	Cn + Free Cn	FC	EC	H_2S	Asb	BOD	P/P	TBT	Nonylphenol	1,2,Diphenylhydrazine	Cr3, Cr6	Br, Color	Sul	Sur	DS	Test Required	Notes
Preservative										SH			ZA,SH									ZA,SH				
		Outall ~~013~~ or 104	7/14/11	1400		X	Pos / Neg	Yes / No	Pos / Neg	1		1	2		1	4		1		2	1	1	1		1,2,3	Do Pest / PCBs per attached list ~~For 1,2-Diphenylhydrazine, use Method 526 at QL = 0.1 ppb~~

MS 7/21/11

Relinquished by: (Signature) WMS	Date 7/14/11 Time 1730	Received by: (Signature)	Date Time
Relinquished by: (Signature)	Date Time	Received by: (Signature) Rachel Brown	Date 7-19-11 Time 17:30

Primary Laboratories
7423 Lee Davis Road
Mechanicsville, VA 23111
804-559-9004

5.4 °C

coc CPM NA 013,104.xlsx

DOMINION LABORATORY SERVICES

REPORT PRODUCED ON 09/15/2011

CERTIFICATE OF ANALYSIS TEST RESULTS BY SAMPLE

Location: NORTH ANNA

Submitter: GLENN BISHOP

System Laboratory Number: 391006
Description :OUTFALL 104

Sample Date: 07/19/2011

Parameter		Result	Method	Test Code	Analyst	Date Analyzed	Time Analyzed
Ammonia as N, PPM		53.60	SM18TH 4500NH3F	NH3	DAWNE01	07/28/2011	1642
Boron as B, PPM		0.05	SM18TH 4500-B B	B	DONNA13	08/03/2011	1100
COD, PPM		25.46	HACH 8000	COD	DONNA13	08/02/2011	1030
Fluoride as F, PPM		0.181	EPA 300	FIC	DAWNE01	08/04/2011	2056
NO3+NO2, PPM		1.68	EPA 353.2	NO3NO2	DAWNE01	07/21/2011	909
Oil and Grease, PPM	<	5.00	EPA 1664A	O&G	TANYA19	07/22/2011	930
Phenol, PPM		0.03	EPA 420.1	PHENOL	TANYA19	08/12/2011	1252
Sulfate as SO4, PPM		14.78	EPA 300	SO4IC	DAWNE01	08/04/2011	2056
TK Nitrogen as N,PPM		90.32	EPA 351.2	TKN	DONNA13	08/11/2011	1045
TOC, PPM		9.6	SM18TH 5310B	TOC	DONNA13	08/03/2011	1302
Total Phos. as P,PPM		1.10	SM18TH 4500-P	TP	TANYA19	08/11/2011	1325
Aluminum as Al, PPM		0.19	SM18TH 3111D	AL	DAWNE01	08/24/2011	1151
Antimony as Sb, ppb	<	1.	SM18TH 3113B	SBPPB	STEVE72	08/01/2011	951
Arsenic as As, ppb	<	3.	SM18TH 3113B	ASPPB	STEVE72	08/01/2011	844
Barium as Ba, ppb		45.	SM18TH 3113B	BAPPB	STEVE72	09/08/2011	1314
Beryllium as Be, ppb	<	0.2	SM18TH 3113B	BEPPB	STEVE72	09/13/2011	604
Cadmium as Cd, ppb	<	0.3	SM18TH 3113B	CDPPB	STEVE72	09/13/2011	1109
Chromium as Cr, ppb	<	1.	SM18TH 3113B	CRPPB	STEVE72	09/13/2011	1226
Cobalt as Co, ppb	<	0.6	SM18TH 3113B	COPPB	STEVE72	09/13/2011	618
Copper as Cu, ppb		8.	SM18TH 3113B	CUPPB	STEVE72	08/01/2011	1627
Iron as Fe, PPM		0.06	SM18TH 3111B	FE	DAWNE01	08/12/2011	957
Lead as Pb, ppb	<	1.	SM18TH 3113B	PBPPB	STEVE72	08/01/2011	1758
Magnesium as Mg, PPM		5.87	SM18TH 3111B	MG	DAWNE01	08/16/2011	1609
Manganese as Mn, PPM		0.07	SM18TH 3111B	MN	DAWNE01	08/12/2011	1046
Mercury as Hg, ppb	<	0.2	SM18TH 3112B	HGPPB	STEVE72	07/27/2011	743
Molybdenum as Mo,ppb		13.	SM18TH 3113B	MOPPB	STEVE72	09/09/2011	903
Nickel as Ni, ppb	<	5.	SM18TH 3113B	NIPPB	STEVE72	08/01/2011	1931
Selenium as Se, ppb	<	3.	SM18TH 3113B	SEPPB	STEVE72	08/01/2011	1030
Silver as Ag, ppb	<	0.1	SM18TH 3113B	AGPPB	STEVE72	09/09/2011	1034
Thallium as Tl, ppb		0.2	EPA 279.2	TLPPB	STEVE72	08/01/2011	1345
Tin as Sn, ppb	<	5.	SM18TH 3113B	SNPPB	STEVE72	09/06/2011	1006
Titanium as Ti, ppb	<	2.	EPA 283.2	TIPPB	STEVE72	09/13/2011	834
Zinc as Zn, PPM		0.379	SM18TH 3111B	ZN	DAWNE01	08/12/2011	1132
Methyl Chloride, ppb	<	1.10	EPA 624	VOA624	CHAR130	07/26/2011	1024
Methyl Bromide, ppb	<	1.40	EPA 624	VOA624	CHAR130	07/26/2011	1024
Vinyl Chloride, ppb	<	1.80	EPA 624	VOA624	CHAR130	07/26/2011	1024
Chloroethane, ppb	<	1.10	EPA 624	VOA624	CHAR130	07/26/2011	1024

DOMINION LABORATORY SERVICES

REPORT PRODUCED ON 09/15/2011

CERTIFICATE OF ANALYSIS TEST RESULTS BY SAMPLE

Location: NORTH ANNA

Submitter: GLENN BISHOP

System Laboratory Number: 391006
Description :OUTFALL 104

Sample Date: 07/19/2011

Parameter	Result	Method	Test Code	Analyst	Date Analyzed	Time Analyzed
Methylene Chloride, ppb	< 2.80	EPA 624	VOA624	CHAR130	07/26/2011	1024
Acrolein, ppb	< 10.00	EPA 624	VOA624	CHAR130	07/26/2011	1024
Acrylonitrile, ppb	< 1.50	EPA 624	VOA624	CHAR130	07/26/2011	1024
Trichlorofluoromethane, ppb	< 2.30	EPA 624	VOA624	CHAR130	07/26/2011	1024
1,1-Dichloroethylene, ppb	< 2.80	EPA 624	VOA624	CHAR130	07/26/2011	1024
1,1-Dichloroethane, ppb	< 4.70	EPA 624	VOA624	CHAR130	07/26/2011	1024
1,2-Trans-Dichloroethylene, ppb	< 1.60	EPA 624	VOA624	CHAR130	07/26/2011	1024
Chloroform, ppb	< 1.60	EPA 624	VOA624	CHAR130	07/26/2011	1024
1,2-Dichloroethane, ppb	< 2.80	EPA 624	VOA624	CHAR130	07/26/2011	1024
1,1,1-Trichloroethane, ppb	< 3.80	EPA 624	VOA624	CHAR130	07/26/2011	1024
Carbon Tetrachloride, ppb	< 2.80	EPA 624	VOA624	CHAR130	07/26/2011	1024
Dichlorobromomethane, ppb	< 2.20	EPA 624	VOA624	CHAR130	07/26/2011	1024
1,2-Dichloropropane, ppb	< 6.00	EPA 624	VOA624	CHAR130	07/26/2011	1024
Cis-1 3-Dichloropropylene, ppb	< 5.00	EPA 624	VOA624	CHAR130	07/26/2011	1024
Trans-1 3-Dichloropropylene, ppb	< 0.90	EPA 624	VOA624	CHAR130	07/26/2011	1024
Trichloroethylene, ppb	< 1.90	EPA 624	VOA624	CHAR130	07/26/2011	1024
Chlorodibromomethane, ppb	< 3.10	EPA 624	VOA624	CHAR130	07/26/2011	1024
Benzene, ppb	< 4.40	EPA 624	VOA624	CHAR130	07/26/2011	1024
1,1,2-Trichloroethane, ppb	< 5.00	EPA 624	VOA624	CHAR130	07/26/2011	1024
2-Chloroethylvinyl Ether, ppb	< 1.20	EPA 624	VOA624	CHAR130	07/26/2011	1024
Bromoform, ppb	< 4.70	EPA 624	VOA624	CHAR130	07/26/2011	1 024
1,1,2,2-Tetrachloroethane, ppb	< 6.90	EPA 624	VOA624	CHAR130	07/26/2011	1024
Tetrachloroethylene, ppb	< 4.10	EPA 624	VOA624	CHAR130	07/26/2011	1024
Toluene, ppb	< 6.00	EPA 624	VOA624	CHAR130	07/26/2011	1024
Chlorobenzene, ppb	< 6.00	EPA 624	VOA624	CHAR130	07/26/2011	1024
Ethylbenzene, ppb	< 7.20	EPA 624	VOA624	CHAR130	07/26/2011	1024
1,3 Dichlorobenzene, ppb	< 5.00	EPA 624	VOA624	CHAR130	07/26/2011	1024
1,4 Dichlorobenzene, ppb	< 5.00	EPA 624	VOA624	CHAR130	07/26/2011	1024
1,2 Dichlorobenzene, ppb	< 5.00	EPA 624	VOA624	CHAR130	07/26/2011	1024
Phenol, ppb	< 2.70	EPA 625	ACID625	CHAR130	08/09/2011	34
2-Chlorophenol, ppb	< 3.30	EPA 625	ACID625	CHAR130	08/09/2011	34
2-Nitrophenol, ppb	< 3.60	EPA 625	ACID625	CHAR130	08/09/2011	34
2,4-Dimethylphenol, ppb	< 5.20	EPA 625	ACID625	CHAR130	08/09/2011	34
2,4-Dichlorophenol, ppb	< 5.60	EPA 625	ACID625	CHAR130	08/09/2011	34
4-Chloro-3-Methylphenol, ppb	< 7.50	EPA 625	ACID625	CHAR130	08/09/2011	34
2,4,6-Trichlorophenol, ppb	< 2.70	EPA 625	ACID625	CHAR130	08/09/2011	34
2,4-Dinitrophenol, ppb	< 42.00	EPA 625	ACID625	CHAR130	08/09/2011	34

DOMINION LABORATORY SERVICES

REPORT PRODUCED ON 09/15/2011

CERTIFICATE OF ANALYSIS TEST RESULTS BY SAMPLE

Location: NORTH ANNA

Submitter: GLENN BISHOP

System Laboratory Number: 391006
Description :OUTFALL 104

Sample Date: 07/19/2011

Parameter	Result	Method	Test Code	Analyst	Date Analyzed	Time Analyzed
4-Nitrophenol, ppb	< 2.40	EPA 625	ACID625	CHAR130	08/09/2011	34
2-Methyl-4,6-Dinitrophenol, ppb	< 24.00	EPA 625	ACID625	CHAR130	08/09/2011	34
Pentachlorophenol, ppb	< 3.60	EPA 625	ACID625	CHAR130	08/09/2011	34
Dis. Tl, ppb	< 0.2	EPA 279.2	TLDISPPB	STEVE72	08/01/2011	1345
Dis. Ti, ppb	< 2.	EPA 283.2	TIDISPPB	STEVE72	09/13/2011	834
Dis. Sn, ppb	< 5.	SM18TH 3113B	SNDISPPB	STEVE72	09/06/2011	1006
Dis. Se, ppb	< 3.	SM18TH 3113B	SEDISPPB	STEVE72	08/01/2011	1030
Dis. Sb, ppb	< 1.	SM18TH 3113B	SBDISPPB	STEVE72	08/01/2011	951
Dis. Pb, ppb	< 1.	SM18TH 3113B	PBDISPPB	STEVE72	08/01/2011	1758
Dis. Ni, ppb	< 5.	SM18TH 3113B	NIDISPPB	STEVE72	08/01/2011	1931
Dis. Mo, ppb	13.	SM18TH 3113B	MODISPPB	STEVE72	09/09/2011	903
Dis. Hg, ppb	< 0.2	SM18TH 3112B	HGDISPPB	STEVE72	07/27/2011	743
Dis. Cu, ppb	8.	SM18TH 3113B	CUDISPPB	STEVE72	08/01/2011	1627
Dis. Cr, ppb	< 1.	SM18TH 3113B	CRDISPPB	STEVE72	09/13/2011	1226
Dis. Co, ppb	< 0.6	SM18TH 3113B	CODISPPB	STEVE72	09/13/2011	618
Dis. Cd, ppb	< 0.3	SM18TH 3113B	CDDISPPB	STEVE72	09/13/2011	1109
Dis. Be, ppb	< 0.2	SM18TH 3113B	BEDISPPB	STEVE72	09/13/2011	604
Dis. Ba, ppb	40.	SM18TH 3113B	BADISPPB	STEVE72	09/08/2011	1314
Dis. As, ppb	< 3.	SM18TH 3113B	ASDISPPB	STEVE72	08/01/2011	844
Dis. Ag, ppb	< 0.1	SM18TH 3113B	AGDISPPB	STEVE72	09/09/2011	1034
Dis. Zn, PPM	0.303	SM18TH 3111B	ZNDIS	DAWNE01	08/12/2011	1132
Dis. Mn, PPM	0.02	SM18TH 3111B	MNDIS	DAWNE01	08/12/2011	1046
Dis. Mg, PPM	5.77	SM18TH 3111B	MGDIS	DAWNE01	08/16/2011	1609
Dis. Fe, PPM	< 0.05	SM18TH 3111B	FEDIS	DAWNE01	08/12/2011	957
Dis. Al, PPM	0.18	SM18TH 3111D	ALDIS	DAWNE01	08/24/2011	1151
T-Dis. Solids, PPM	197.0	SM18TH 2540C	TDS	TANYA19	07/21/2011	1400
Nitrate as N, PPM	0.57	EPA 353.2	NO3	DAWNE01	07/21/2011	909
Chloride as Cl, PPM	26.06	EPA 300	CLIC	DAWNE01	08/04/2011	2056
T-Hard. as CaCO3,PPM	41.04	SM18TH 2340C	HARD	TANYA19	07/26/2011	930
2,4-D, ppb	< 10.00	EPA 615	8151GC	HERBE31	08/01/2011	
Silvex, ppb	< 2.00	EPA 615	8151GC	HERBE31	08/01/2011	
Chlorpyrifos, ppb	< 0.2000	EPA 622	ORGPHOS	HERBE31	07/27/2011	
Demeton, ppb	< 1.0000	EPA 622	ORGPHOS	HERBE31	07/27/2011	
Diazinon, ppb	< 1.0000	EPA 622	ORGPHOS	HERBE31	07/27/2011	
Guthion, ppb	< 1.0000	EPA 622	ORGPHOS	HERBE31	07/27/2011	
Malathion, ppb	< 1.0000	EPA 622	ORGPHOS	HERBE31	07/27/2011	
Parathion, ppb	< 1.0000	EPA 622	ORGPHOS	HERBE31	07/27/2011	

DOMINION LABORATORY SERVICES

REPORT PRODUCED ON 09/15/2011

CERTIFICATE OF ANALYSIS TEST RESULTS BY SAMPLE

Location: NORTH ANNA

Submitter: GLENN BISHOP

System Laboratory Number: 391006
Description :OUTFALL 104

Sample Date: 07/19/2011

Parameter	Result	Method	Test Code	Analyst	Date Analyzed	Time Analyzed
Aldrin, ppb	< 0.050	EPA 608	608GC	HERBE31	08/03/2011	
Chlordane, ppb	< 0.200	EPA 608	608GC	HERBE31	08/03/2011	
Dieldrin, ppb	< 0.100	EPA 608	608GC	HERBE31	08/03/2011	
4,4-DDT, ppb	< 0.100	EPA 608	608GC	HERBE31	08/03/2011	
4,4-DDE, ppb	< 0.100	EPA 608	608GC	HERBE31	08/03/2011	
4,4-DDD, ppb	< 0.100	EPA 608	608GC	HERBE31	08/03/2011	
Endosulfan Sulfate, ppb	< 0.100	EPA 608	608GC	HERBE31	08/03/2011	
Endosulfan I, ppb	< 0.100	EPA 608	608GC	HERBE31	08/03/2011	
Endosulfan II, ppb	< 0.100	EPA 608	608GC	HERBE31	08/03/2011	
Endrin, ppb	< 0.100	EPA 608	608GC	HERBE31	08/03/2011	
Alpha-BHC, ppb	< 0.100	EPA 608	608GC	HERBE31	08/03/2011	
Beta-BHC, ppb	< 0.100	EPA 608	608GC	HERBE31	08/03/2011	
Delta-BHC, ppb	< 0.100	EPA 608	608GC	HERBE31	08/03/2011	
Gamma-BHC (Lindane), ppb	< 0.100	EPA 608	608GC	HERBE31	08/03/2011	
Heptachlor, ppb	< 0.050	EPA 608	608GC	HERBE31	08/03/2011	
Kepone, ppb	< 0.100	EPA 608	608GC	HERBE31	08/03/2011	
Methoxychlor, ppb	< 0.100	EPA 608	608GC	HERBE31	08/03/2011	
Mirex, ppb	< 0.100	EPA 608	608GC	HERBE31	08/03/2011	
Endrin Aldehyde, ppb	< 0.100	EPA 608	608GC	HERBE31	08/03/2011	
Heptachlor Epoxide, ppb	< 0.100	EPA 608	608GC	HERBE31	08/03/2011	
Toxaphene, ppb	< 5.000	EPA 608	608GC	HERBE31	08/03/2011	
Arochlor 1016, ppb	< 1.0	EPA 608	608PCB	HERBE31	08/03/2011	
Arochlor 1221, ppb	< 1.0	EPA 608	608PCB	HERBE31	08/03/2011	
Arochlor 1232, ppb	< 1.0	EPA 608	608PCB	HERBE31	08/03/2011	
Arochlor 1242, ppb	< 1.0	EPA 608	608PCB	HERBE31	08/03/2011	
Arochlor 1248, ppb	< 1.0	EPA 608	608PCB	HERBE31	08/03/2011	
Arochlor 1254, ppb	< 1.0	EPA 608	608PCB	HERBE31	08/03/2011	
Arochlor 1260, ppb	< 1.0	EPA 608	608PCB	HERBE31	08/03/2011	
Cyanide as CN, PPM	< 0.010	SM 4500CN E	CN	HERBE31	07/21/2011	
BOD, PPM	< 3.00	SM 5210 B	BOD	HERBE31	07/20/2011	1200
Sulfide, PPM	< 0.05	SM18TH 4500S 2 E	SULFID	HERBE31	07/26/2011	910
Hydrogen Sulfide, PPM	< 0.05	EPA 376.1	HYDSULF	HERBE31	08/01/2011	
Nonylphenol, ppb	< 10.0	EPA 8270C	NONYLPNL	HERBE31	07/21/2011	
Chrom. +6 as Cr6,PPM	< 0.005	SM 3500-CR D	CR6	HERBE31	07/20/2011	930
Bromide as Br, PPM	8.80	EPA 320.1	BR	HERBE31	08/02/2011	
Color, PCU	15.0	SM18TH 2120B	CLR	HERBE31	07/21/2011	900
MBAS as LAS, PPM	< 0.010	SM 5540C	SURF	HERBE31	07/21/2011	

DOMINION LABORATORY SERVICES
==========
REPORT PRODUCED ON 09/15/2011

CERTIFICATE OF ANALYSIS TEST RESULTS BY SAMPLE

Location: NORTH ANNA

Submitter: GLENN BISHOP

System Laboratory Number: 391006
Description :OUTFALL 104

Sample Date: 07/19/2011

Parameter	Result	Method	Test Code	Analyst	Date Analyzed	Time Analyzed
Chromium as Cr, PPM	< 0.02	SM18TH 3120B	CR-ICP	HERBE31	07/28/2011	
Gross Alpha, pCi/L	< 2.350	EPA 900.0	RADIO	HERBE31	07/26/2011	1255
Gross Beta, pCi/L	5.000	EPA 900.0	RADIO	HERBE31	07/26/2011	1255
N-Nitrosodimethylamine, ppb	< 6.20	EPA 625	BN625	CHAR130	08/08/2011	1624
Bis(-2-Chloroethyl) ether, ppb	< 5.70	EPA 625	BN625	CHAR130	08/08/2011	1624
Bis(2-Chloroisopropyl) ether, ppb	< 5.70	EPA 625	BN625	CHAR130	08/08/2011	1624
N-nitroso-Di-n-propylamine, ppb	< 3.60	EPA 625	BN625	CHAR130	08/08/2011	1624
Hexachloroethane, ppb	< 2.40	EPA 625	BN625	CHAR130	08/08/2011	1624
Nitrobenzene, ppb	< 4.20	EPA 625	BN625	CHAR130	08/08/2011	1624
Isophorone, ppb	< 5.10	EPA 625	BN625	CHAR130	08/08/2011	1624
Bis(-2-Chloroethoxy) Methane, ppb	< 5.30	EPA 625	BN625	CHAR130	08/08/2011	1624
1,2,4-Trichlorobenzene, ppb	< 7.90	EPA 625	BN625	CHAR130	08/08/2011	1624
Naphthalene, ppb	< 3.80	EPA 625	BN625	CHAR130	08/08/2011	1624
Hexachlorobutadiene, ppb	< 1.80	EPA 625	BN625	CHAR130	08/08/2011	1624
Hexachlorocyclopentadiene, ppb	< 10.00	EPA 625	BN625	CHAR130	08/08/2011	1624
2-Chloronaphthalene, ppb	< 4.60	EPA 625	BN625	CHAR130	08/08/2011	1624
Dimethyl Phthalate, ppb	< 7.50	EPA 625	BN625	CHAR130	08/08/2011	1624
Acenaphthylene, ppb	< 3.50	EPA 625	BN625	CHAR130	08/08/2011	1624
2,6-Dinitrotoluene, ppb	< 3.40	EPA 625	BN625	CHAR130	08/08/2011	1624
Acenaphthene, ppb	< 3.00	EPA 625	BN625	CHAR130	08/08/2011	1624
2,4-Dinitrotoluene, ppb	< 5.70	EPA 625	BN625	CHAR130	08/08/2011	1624
Diethylphthalate, ppb	< 7.40	EPA 625	BN625	CHAR130	08/08/2011	1624
Fluorene, ppb	< 2.20	EPA 625	BN625	CHAR130	08/08/2011	1624
4-Chlorophenyl-phenylether, ppb	< 4.20	EPA 625	BN625	CHAR130	08/08/2011	1624
N-nitrosodiphenylamine, ppb	< 2.70	EPA 625	BN625	CHAR130	08/08/2011	1624
1,2-Diphenylhydrazine, ppb	< 8.80	EPA 625	BN625	CHAR130	08/08/2011	1624
4-Bromophenyl-phenylether, ppb	< 3.00	EPA 625	BN625	CHAR130	08/08/2011	1624
Hexachlorobenzene, ppb	< 3.10	EPA 625	BN625	CHAR130	08/08/2011	1624
Phenanthrene, ppb	< 5.40	EPA 625	BN625	CHAR130	08/08/2011	1624
Anthracene, ppb	< 1.90	EPA 625	BN625	CHAR130	08/08/2011	1624
Di-n-Butylphthalate, ppb	< 6.40	EPA 625	BN625	CHAR130	08/08/2011	1624
Fluoranthene, ppb	< 2.20	EPA 625	BN625	CHAR130	08/08/2011	1624
Benzidine, ppb	< 63.00	EPA 625	BN625	CHAR130	08/08/2011	1624
Pyrene, ppb	< 3.80	EPA 625	BN625	CHAR130	08/08/2011	1624
Butylbenzylphthalate, ppb	< 2.50	EPA 625	BN625	CHAR130	08/08/2011	1624
Chrysene, ppb	< 2.50	EPA 625	BN625	CHAR130	08/08/2011	1624
3,3'-Dichlorobenzidine, ppb	< 16.50	EPA 625	BN625	CHAR130	08/08/2011	1624

DOMINION LABORATORY SERVICES

REPORT PRODUCED ON 09/15/2011

CERTIFICATE OF ANALYSIS TEST RESULTS BY SAMPLE

Location: NORTH ANNA

Submitter: GLENN BISHOP

System Laboratory Number: 391006

Sample Date: 07/19/2011

Description :OUTFALL 104

Parameter	Result	Method	Test Code	Analyst	Date Analyzed	Time Analyzed
Benzo (a) Anthracene, ppb	< 7.80	EPA 625	BN625	CHAR130	08/08/2011	1624
Bis(2-ethylhexyl) Phthalate, ppb	< 2.50	EPA 625	BN625	CHAR130	08/08/2011	1624
Di-n-octyl Phthalate, ppb	< 2.50	EPA 625	BN625	CHAR130	08/08/2011	1624
Benzo (b) fluoranthene, ppb	< 4.80	EPA 625	BN625	CHAR130	08/08/2011	1624
Benzo (k) fluoranthene, ppb	< 2.50	EPA 625	BN625	CHAR130	08/08/2011	1624
Benzo (a) pyrene, ppb	< 2.50	EPA 625	BN625	CHAR130	08/08/2011	1624
Indeno (1 2 3-cd) pyrene, ppb	< 3.70	EPA 625	BN625	CHAR130	08/08/2011	1624
Dibenzo (a h) anthracene, ppb	< 2.50	EPA 625	BN625	CHAR130	08/08/2011	1624
Benzo (g h i) perylene, ppb	< 4.10	EPA 625	BN625	CHAR130	08/08/2011	1624

(K)O# 419571

Location:	North Anna PS	Requested by:	Glenn Bishop	Priority:	9
Required Date: 60 days	7/16/11	Phone:		Date Analysis Complete:	9-12-11
Comment:		Sampled by:	WGB	Date Approved Released:	9-25-11

Bottle Types: O/G=Oil and Grease, PT=Phenols Total, V=Volatiles, M=Metals, A=[Ammonia,TKN,TP,COD,NO_3/NO_2], BOD=Biological Oxygen Demand
TOC=Total Organic Carbon, TSS=[Total Suspended Solids,B,F,NO_3/NO_2,SO_4,TDS,Chloride]
ABN=Acid Base Neutrals, PP=Pesticide/PCBs

Preservatives: HCl=Hydrochloric acid, CS=Cu Sulfate, S=Sulfuric acid, N=Nitric acid, ZA=Zinc acetate, SH=Sodium Hydroxide

Tests Required 1= Phenol total, Volatiles, [Ammonia, TKN, TP, COD, NO_3/NO_2], TOC
2= [TDS, B, F, NO_3/NO_2, Nitrate N, Chlorides, SO_4]
3= ABN
4= TR and Diss Metals Al,Ba,Co,Fe,Mg,Mo,Mn,Sn,Ti,Sb,As,Be,Cd,Cr,Cu,Pb,Hg,Ni,Se,Ag,Tl,Zn + Hardness

NOTE:

Consider:
Flow
Temp (W+S)
TRC

X - PLACE AN "X" IN THE BOX FOR SAMPLES TO BE SUBMITTED

System Lab Number	x	Sample ID	Sample Date	Sample Time	Comp	Grab	Cl_2 Screen [ABN,Vol]	Dechlor confirmed?	Project Code	O/G	PT	V	M	A	BOD	TOC	TSS	ABN	P/P	Test Required	Notes
Preservative										HCl	CS,S	HCl	N	S		HCl					
391005	X	Outfall ~~040~~ or 104	7/19/11	400		X	Pos / Neg	Yes / No	Const	1	1	6	2	1		1	1	3		1,2,3,4	Temp = 45.5 TRC = <0.1

Relinquished by: (Signature)	WWB	Date 7/20/11	Time 0810	Received by: (Signature)	Date 7/20/11 Time 0810
Relinquished by: (Signature)		Date	Time	Received by: (Signature)	Date Time

Dominion Resources
Laboratory Services
11202 Old Stage Road
Chester, VA 23836

* ~~Bottles are labeled 013, they are = 104~~

(T2)

coc CPM NA 013,104.xlsx

Dominion Laboratory Login Checklist

Station/Study: NA		WO#: 48571	
Thermometer Used: 61951674 or 61951693		Temp: 6.3°C	
	Type of Ice: Wet Blue None		
Chain of Custody Present	Yes	No	N/A
Chain of Custody Filled Out	Yes	No	N/A
Chain of Custody Relinquished	Yes	No	N/A
Sampler Name on COC	Yes	No	N/A
Samples Labels match COC	Yes	No	N/A
Includes date/time/ID/Analysis	Yes	No	N/A
All entries in Ink	Yes	No	N/A
Samples Arrived within Holding Time	Yes	No	N/A
Short Hold Time Analysis (<72hr)	Yes	No	N/A
Rush Turn Around Time Requested	Yes	No	N/A
Sufficient Volume	Yes	No	N/A
Correct Containers Used	Yes	No	N/A
Containers Used: (circle)	NH3	Solids	O&G
	TOC	OPO4	ABN
	IC	DRO	Phenol
	Hardness	Radioactivity	Volatiles
	Grain Size	Metals (Total or Dissolved)	
	Other:		
# of Bottles on COC correct	Yes	No	N/A
Filtered Volume received for Dissolved Tests	Yes	No	N/A
Custody Seal Intact	Yes	No	N/A
Date/Time Received: 7/20/11 @810			
Received by: TMZ			
Due Date on COC match worksheet	Yes	No	N/A
Tests Required on COC match worksheet	Yes	No	N/A
Verified by: [signature]		Date: 7/20/11	

Primary Laboratories, Inc.

7423 Lee Davis Road • Mechanicsville, VA 23111 • Telephone (804) 559-9004 • Fax (804) 559-9306

ANALYTICAL LABORATORY REPORT

18-Oct-11

Dominion Virginia Power
Attn: Glenn Bishop
4111 Castlewood Road
Richmond, Va. 23234

Project: North Anna PS
Date Received: 7-Oct-11
Date Sampled: 7-Oct-11
Work Order No: 1110072-01
Client ID: **Outfall 104**

Test Description	Final Result	Reporting Limit	Units of Measure	Method Numbers*	Date Analyzed	Tech. Initials
Ammonia	0.14	0.01	mg/L	4500NH3 F	17-Oct-11 at 8:30	NA

* All methods are Standard Methods 18th Edition unless otherwise noted.

Signature: _____ Date: 10/18/11
Parry L. Bragg
Laboratory Manager

These analytical results are based upon materials provided by the client and are intended for the exclusive use of the client. These analytical results represent the best judgement of Primary Laboratories, Inc. Primary Laboratories, Inc. assumes no responsibility, express or implied, as to the interpretation of the analytical results contained in this report. This report is not to be reproduced except with the written approval of Primary Laboratories, Inc.

Location: North Anna PS	Requested by:	Priority:
Required Date: 60 days	Phone:	Date Analysis Complete:
Comment:	Sampled by: WGB	Date Approved Released:

Bottle Types: O/G=Oil and Grease, PT=Phenols Total, V=Volatiles, M=Metals, A=(Ammonia,TKN,TP,COD,NO_2/NO_3), BOD=Biological Oxygen Demand
TOC=Total Organic Carbon, TSS=(Total Suspended Solids,B,F,NO_3/NO_2,SO_4,~~TDS,Chloride~~)
ABN=Acid Base Neutrals, PP=Pesticide/PCBs

Preservatives: HCl=Hydrochloric acid, CS=Cu Sulfate, S=Sulfuric acid, N=Nitric acid, ZA=Zinc acetate, SH=Sodium Hydroxide

Tests Required 1= Ammonia

NOTE:

Consider:
Flow
Temp (W+S)

TRC

1110072

X - PLACE AN "X" IN THE BOX FOR SAMPLES TO BE SUBMITTED

System Lab Number	x	Sample ID	Sample Date	Sample Time	Comp	Grab	Cl_2 Screen (ABN,Vol)	Dechlor confirmed?		O/G (HCl)	PT (CS,S)	V (HCl)	M (N)	A (S)	BOD			TOC (HCl)	TSS	ABN	P/P	Test Required	Notes
		Outfall 104	10/7/11	1055		x								1								1	Temp = 32.2

Relinquished by: (Signature) WHK	Date 10/7/11 Time 1000	Received by: (Signature) [signature]	Date 10/7/11 Time 1000
Relinquished by: (Signature)	Date Time	Received by: (Signature)	Date Time

Dominion Resources
Laboratory Services
11202 Old Stage Road
Chester, VA 23836

Pace Analytical®
www.pacelabs.com

Pace Analytical Services, Inc.
1638 Roseytown Road - Suites 2,3,4
Greensburg, PA 15601
(724)850-5600

July 31, 2011

Mr. Glenn Bishop
Dominion Environmental Biology
4111 Castlewood Road
Richmond, VA 23234

RE: Project: North Anna 020
Pace Project No.: 3050677

Dear Mr. Bishop:
Enclosed are the analytical results for sample(s) received by the laboratory on July 22, 2011. The results relate only to the samples included in this report. Results reported herein conform to the most current TNI standards, where applicable, unless otherwise narrated in the body of the report.

If you have any questions concerning this report, please feel free to contact me.

Sincerely,

Jacquelyn Collins

jacquelyn.collins@pacelabs.com
Project Manager

Enclosures

This report shall not be reproduced, except in full,
without the written consent of Pace Analytical Services, Inc..

Pace Analytical Services, Inc.
1638 Roseytown Road - Suites 2,3,4
Greensburg, PA 15601
(724)850-5600

CERTIFICATIONS

Project: North Anna 020
Pace Project No.: 3050677

Pennsylvania Certification IDs
1638 Roseytown Road Suites 2,3&4, Greensburg, PA 15601
Alabama Certification #: 41590
Arizona Certification #: AZ0734
Arkansas Certification
California/NELAC Certification #: 04222CA
Colorado Certification
Connecticut Certification #: PH 0694
Delaware Certification
Florida/NELAC Certification #: E87683
Guam/PADEP Certification
Hawaii/PADEP Certification
Idaho Certification
Illinois/PADEP Certification
Indiana/PADEP Certification
Iowa Certification #: 391
Kansas/NELAC Certification #: E-10358
Kentucky Certification #: 90133
Louisiana/NELAC Certification #: LA080002
Louisiana/NELAC Certification #: 4086
Maine Certification #: PA0091
Maryland Certification #: 308
Massachusetts Certification #: M-PA1457
Michigan/PADEP Certification
Missouri Certification #: 235
Montana Certification #: Cert 0082
Nevada Certification
New Hampshire/NELAC Certification #: 2976
New Jersey/NELAC Certification #: PA 051
New Mexico Certification
New York/NELAC Certification #: 10888
North Carolina Certification #: 42706
Oregon/NELAC Certification #: PA200002
Pennsylvania/NELAC Certification #: 65-00282
Puerto Rico Certification #: PA01457
South Dakota Certification
Tennessee Certification #: TN2867
Texas/NELAC Certification #: T104704188-09 TX
Utah/NELAC Certification #: ANTE
Virgin Island/PADEP Certification
Virginia Certification #: 00112
Washington Certification #: C1941
West Virginia Certification #: 143
Wisconsin/PADEP Certification
Wyoming Certification #: 8TMS-Q

This report shall not be reproduced, except in full,
without the written consent of Pace Analytical Services, Inc..

Pace Analytical Services, Inc.
1638 Roseytown Road - Suites 2,3,4
Greensburg, PA 15601
(724)850-5600

SAMPLE SUMMARY

Project: North Anna 020
Pace Project No.: 3050677

Lab ID	Sample ID	Matrix	Date Collected	Date Received
3050677001	**North Anna 020**	Water	07/19/11 11:05	07/22/11 10:00

This report shall not be reproduced, except in full,
without the written consent of Pace Analytical Services, Inc..

Pace Analytical Services, Inc.
1638 Roseytown Road - Suites 2,3,4
Greensburg, PA 15601
(724)850-5600

SAMPLE ANALYTE COUNT

Project: North Anna 020
Pace Project No.: 3050677

Lab ID	Sample ID	Method	Analysts	Analytes Reported	Laboratory
3050677001	**North Anna 020**	EPA 900.0m	JC2	2	PASI-PA

This report shall not be reproduced, except in full,
without the written consent of Pace Analytical Services, Inc..

Pace Analytical Services, Inc.
1638 Roseytown Road - Suites 2,3,4
Greensburg, PA 15601
(724)850-5600

PROJECT NARRATIVE

Project: North Anna 020
Pace Project No.: 3050677

Method: **EPA 900.0m**
Description: 900.0 Gross Alpha/Beta
Client: Dominion Environmental Biology
Date: July 31, 2011

General Information:
1 sample was analyzed for EPA 900.0m. All samples were received in acceptable condition with any exceptions noted below.

Hold Time:
The samples were analyzed within the method required hold times with any exceptions noted below.

Method Blank:
All analytes were below the report limit in the method blank with any exceptions noted below.

Laboratory Control Spike:
All laboratory control spike compounds were within QC limits with any exceptions noted below.

Matrix Spikes:
All percent recoveries and relative percent differences (RPDs) were within acceptance criteria with any exceptions noted below.

Duplicate Sample:
All duplicate sample results were within method acceptance criteria with any exceptions noted below.

Additional Comments:

This data package has been reviewed for quality and completeness and is approved for release.

This report shall not be reproduced, except in full,
without the written consent of Pace Analytical Services, Inc..

Pace Analytical Services, Inc.
1638 Roseytown Road - Suites 2,3,4
Greensburg, PA 15601
(724)850-5600

ANALYTICAL RESULTS

Project: North Anna 020
Pace Project No.: 3050677

Sample: North Anna 020 **Lab ID: 3050677001** Collected: 07/19/11 11:05 Received: 07/22/11 10:00 Matrix: Water
PWS: Site ID: Sample Type:

Parameters	Method	Act ± Unc (MDC)	Units	Analyzed	CAS No.	Qual
Gross Alpha	EPA 900.0m	**-0.615 ± 0.792 (2.65)**	pCi/L	07/26/11 12:55	12587-46-1	
Gross Beta	EPA 900.0m	**3.66 ± 1.50 (2.37)**	pCi/L	07/26/11 12:55	12587-47-2	

This report shall not be reproduced, except in full,
without the written consent of Pace Analytical Services, Inc..

Pace Analytical Services, Inc.
1638 Roseytown Road - Suites 2,3,4
Greensburg, PA 15601
(724)850-5600

QUALITY CONTROL DATA

Project: North Anna 020
Pace Project No.: 3050677

QC Batch: RADC/9036
QC Batch Method: EPA 900.0m
Analysis Method: EPA 900.0m
Analysis Description: 900.0 Gross Alpha/Beta
Associated Lab Samples: 3050677001

METHOD BLANK: 324319
Matrix: Water
Associated Lab Samples: 3050677001

Parameter	Act ± Unc (MDC)	Units	Analyzed	Qualifiers
Gross Alpha	-0.164 ± 0.796 (2.25)	pCi/L	07/26/11 12:57	
Gross Beta	-0.606 ± 0.796 (2.15)	pCi/L	07/26/11 12:57	

This report shall not be reproduced, except in full,
without the written consent of Pace Analytical Services, Inc..

Pace Analytical Services, Inc.
1638 Roseytown Road - Suites 2,3,4
Greensburg, PA 15601
(724)850-5600

QUALIFIERS

Project: North Anna 020
Pace Project No.: 3050677

DEFINITIONS

DF - Dilution Factor, if reported, represents the factor applied to the reported data due to changes in sample preparation, dilution of the sample aliquot, or moisture content.

ND - Not Detected at or above adjusted reporting limit.

J - Estimated concentration above the adjusted method detection limit and below the adjusted reporting limit.

MDL - Adjusted Method Detection Limit.

S - Surrogate

1,2-Diphenylhydrazine (8270 listed analyte) decomposes to Azobenzene.

Consistent with EPA guidelines, unrounded data are displayed and have been used to calculate % recovery and RPD values.

LCS(D) - Laboratory Control Sample (Duplicate)

MS(D) - Matrix Spike (Duplicate)

DUP - Sample Duplicate

RPD - Relative Percent Difference

NC - Not Calculable.

SG - Silica Gel - Clean-Up

U - Indicates the compound was analyzed for, but not detected.

N-Nitrosodiphenylamine decomposes and cannot be separated from Diphenylamine using Method 8270. The result reported for each analyte is a combined concentration.

Act - Activity

Unc - Uncertainty

(MDC) - Minimum Detectable Concentration

Pace Analytical is TNI accredited. Contact your Pace PM for the current list of accredited analytes.

LABORATORIES

PASI-PA Pace Analytical Services - Greensburg

This report shall not be reproduced, except in full,
without the written consent of Pace Analytical Services, Inc..

Pace Analytical™
www.pacelabs.com

CHAIN-OF-CUSTODY / Analytical Request Document

The Chain-of-Custody is a LEGAL DOCUMENT. All relevant fields must be completed accurately.

Section A Required Client Information:

Company:	Dominion Environmental Biology
Address:	4111 Castlewood Road
	Richmond, VA 23234
Email To:	glenn.bishop@dom.com
Phone: 804-350-6918	Fax: 888-342-0629
Requested Due Date/TAT:	Normal

Section B Required Project Information:

Report To:	Glenn Bishop
Copy To:	
Purchase Order No.:	Mastercard
Project Name:	
Project Number:	

Section C Invoice Information:

Attention:	Glenn Bishop
Company Name:	Dominion
Address:	4111 Castlewood Road 23234
Pace Quote Reference:	46012743
Pace Project Manager	
Pace Profile #:	

REGULATORY AGENCY

☐ NPDES ☐ GROUND WATER ☐ DRINKING WATER
☐ UST ☐ RCRA ☐ OTHER _____

Site Location STATE: VA

Section D Required Client Information

SAMPLE ID (A-Z, 0-9 / ,-) Sample IDs MUST BE UNIQUE

Valid Matrix Codes

MATRIX	CODE
DRINKING WATER	DW
WATER	WT
WASTE WATER	WW
PRODUCT	P
SOIL/SOLID	SL
OIL	OL
WIPE	WP
AIR	AR
OTHER	OT
TISSUE	TS

Requested Analysis Filtered (Y/N)

ITEM #	SAMPLE ID	MATRIX CODE (see valid codes to left)	SAMPLE TYPE (G=GRAB C=COMP)	COLLECTED COMPOSITE START DATE	COLLECTED COMPOSITE START TIME	COLLECTED COMPOSITE END/GRAB DATE	COLLECTED COMPOSITE END/GRAB TIME	SAMPLE TEMP AT COLLECTION	# OF CONTAINERS	Preservatives: Unpreserved	H_2SO_4	HNO_3	HCl	NaOH	$Na_2S_2O_3$	Methanol	Other	Analysis Test (Y/N): Gross Alpha	Gross Beta	Strontium 90	Uranium	Tritium							Pace Project No./ Lab I.D. 3050677
1	North Anna 020		G	7/19/11	1105				1	X								X	X								001	Note: If Gross Alpha exceeds
2																												5 picocuries / liter, then analyze
3																												for Radium 226 and Radium 228
4																												
5																												
6																												
7																												
8																												
9																												
10																												
11																												
12																												

ADDITIONAL COMMENTS	RELINQUISHED BY / AFFILIATION	DATE	TIME	ACCEPTED BY / AFFILIATION	DATE	TIME	SAMPLE CONDITIONS			
	WMB	7/21/11	0900	[signature]	7/22/11	1000	WMB	N	N	Y

SAMPLER NAME AND SIGNATURE	
PRINT Name of SAMPLER:	Glenn Bishop
SIGNATURE of SAMPLER:	WMB
DATE Signed (MM/DD/YY):	7/21/11

Temp in °C | Received on Ice (Y/N) | Custody Sealed Cooler (Y/N) | Samples Intact (Y/N)

*Important Note: By signing this form you are accepting Pace's NET 30 day payment terms and agreeing to late charges of 1.5% per month for any invoices not paid within 30 days.

Sample Condition Upon Receipt

Pace Analytical

Client Name: Dominion Env Project # 30506777

Courier: ☐ Fed Ex ☐ UPS ☐ USPS ☐ Client ☐ Commercial ☐ Pace Other _____

Tracking #: 1Z 62V9 7501 9368 0245

Custody Seal on Cooler/Box Present: ☐ yes ☑ no Seals intact: ☐ yes ☐ no

Optional
Proj. Due Date:
Proj. Name:

Packing Material: ☐ Bubble Wrap ☐ Bubble Bags ☑ None ☐ Other _____

Thermometer Used 3 5 Type of Ice: Wet Blue None ☐ Samples on ice, cooling process has begun

Cooler Temperature NA Biological Tissue is Frozen: Yes No

Date and Initials of person examining contents: 7/22/11 RW

Temp should be above freezing to 6°C

		Comments:
Chain of Custody Present:	☑Yes ☐No ☐N/A	1.
Chain of Custody Filled Out:	☑Yes ☐No ☐N/A	2.
Chain of Custody Relinquished:	☑Yes ☐No ☐N/A	3.
Sampler Name & Signature on COC:	☑Yes ☐No ☐N/A	4.
Samples Arrived within Hold Time:	☑Yes ☐No ☐N/A	5.
Short Hold Time Analysis (<72hr):	☐Yes ☑No ☐N/A	6.
Rush Turn Around Time Requested:	☐Yes ☑No ☐N/A	7.
Sufficient Volume:	☑Yes ☐No ☐N/A	8.
Correct Containers Used:	☑Yes ☐No ☐N/A	9.
-Pace Containers Used:	☐Yes ☑No ☐N/A	
Containers Intact:	☑Yes ☐No ☐N/A	10.
Filtered volume received for Dissolved tests	☐Yes ☐No ☑N/A	11.
Sample Labels match COC:	☑Yes ☐No ☐N/A	12.
-Includes date/time/ID/Analysis Matrix: WT		
All containers needing preservation have been checked.	☑Yes ☐No ☐N/A	13. 2 mL's @ 1315 7/22/11 HNO3 RW
All containers needing preservation are found to be in compliance with EPA recommendation.	☐Yes ☑No ☐N/A	
exceptions: VOA, coliform, TOC, O&G, WI-DRO (water)	☐Yes ☑No	Initial when completed RMV Lot # of added preservative RF11 0117-4
Samples checked for dechlorination:	☐Yes ☐No ☑N/A	14.
Headspace in VOA Vials (>6mm):	☐Yes ☐No ☑N/A	15.
Trip Blank Present:	☐Yes ☐No ☑N/A	16.
Trip Blank Custody Seals Present	☐Yes ☐No ☑N/A	
Pace Trip Blank Lot # (if purchased):		

Client Notification/ Resolution: Field Data Required? Y / N

Person Contacted: _____ Date/Time: _____

Comments/ Resolution: _____

Project Manager Review: [signature] **Date:** 7/25/11

Note: Whenever there is a discrepancy affecting North Carolina compliance samples, a copy of this form will be sent to the North Carolina DEHNR Certification Office (i.e out of hold, incorrect preservative, out of temp, incorrect containers)

Primary Laboratories, Inc.

7423 Lee Davis Road • Mechanicsville, VA 23111 • Telephone (804) 559-9004 • Fax (804) 559-9306

ANALYTICAL LABORATORY REPORT

3-Aug-11

Dominion Virginia Power
Attn: Glenn Bishop
4111 Castlewood Road
Richmond, Va. 23234

Date Received: 19-Jul-11
Date Sampled: 19-Jul-11
Work Order No: 1107150-01
Client ID: **North Anna PS-Outfall 020**

Test Description	Final Result	Reporting Limit	Units of Measure	Method Numbers*	Date Analyzed	Tech. Initials
HERBICIDES						
2,4-D	<0.010	0.010	mg/L	8151 A	1-Aug-11	HV
2,4,5-TP	<0.002	0.002	mg/L	SW-846 8151A	1-Aug-11	HV

Date Sampled: 19-Jul-11
Work Order No: 1107150-01
Client ID: **North Anna PS-Outfall 020**

Test Description	Final Result	Reporting Limit	Units of Measure	Method Numbers*	Date Analyzed	Tech. Initials
Organophosphorus Pesticides						
Demeton	<1	1	ug/L	622	27-Jul-11	SC**
Malathion	<1	1	ug/L	622	27-Jul-11	SC**
Chlorpyrifos	<0.2	0.2	ug/L	622	27-Jul-11	SC**
Parathion	<1	1	ug/L	622	27-Jul-11	SC**
Guthion	<1	1	ug/L	622	27-Jul-11	SC**
Diazinon	<1	1	ug/L	622	27-Jul-11	SC**

** Analysis sub-contracted to Reed & Associates

Primary Laboratories, Inc.
Results

3-Aug-11

Date Sampled: 19-Jul-11
Work Order No: 1107150-01
Client ID: **North Anna PS-Outfall 020**

Test Description	Final Result	Reporting Limit	Units of Measure	Method Numbers*	Date Analyzed	Tech. Initials
Pesticides						
Aldrin	<0.05	0.05	ug/L	EPA 608	3-Aug-11	HV
Chlordane	<0.20	0.20	ug/L	EPA 608	3-Aug-11	HV
Dieldrin	<0.10	0.10	ug/L	EPA 608	3-Aug-11	HV
4,4-DDT	<0.10	0.10	ug/L	EPA 608	3-Aug-11	HV
4,4-DDE	<0.10	0.10	ug/L	EPA 608	3-Aug-11	HV
4,4-DDD	<0.10	0.10	ug/L	EPA 608	3-Aug-11	HV
Endosulfan sulfate	<0.10	0.10	ug/L	EPA 608	3-Aug-11	HV
Endosulfan I	<0.10	0.10	ug/L	EPA 608	3-Aug-11	HV
Endosulfan II	<0.10	0.10	ug/L	EPA 608	3-Aug-11	HV
Endrin	<0.10	0.10	ug/L	EPA 608	3-Aug-11	HV
Alpha-BHC	<0.10	0.10	ug/L	EPA 608	3-Aug-11	HV
Beta-BHC	<0.10	0.10	ug/L	EPA 608	3-Aug-11	HV
Delta-BHC	<0.10	0.10	ug/L	EPA 608	3-Aug-11	HV
Gamma-BHC (Lindane)	<0.10	0.10	ug/L	EPA 608	3-Aug-11	HV
Heptachlor	<0.05	0.05	ug/L	EPA 608	3-Aug-11	HV
Endrin Aldehyde	<0.10	0.10	ug/L	EPA 608	3-Aug-11	HV
Heptachlor Epoxide	<0.10	0.10	ug/L	EPA 608	3-Aug-11	HV
Kepone	<0.10	0.10	ug/L	EPA 608	3-Aug-11	HV
Methoxychlor	<0.10	0.10	ug/L	EPA 608	3-Aug-11	HV
Mirex	<0.10	0.10	ug/L	EPA 608	3-Aug-11	HV
PCB-1016	<1.0	1.0	ug/L	EPA 608	3-Aug-11	HV
PCB-1221	<1.0	1.0	ug/L	EPA 608	3-Aug-11	HV
PCB-1232	<1.0	1.0	ug/L	EPA 608	3-Aug-11	HV
PCB-1242	<1.0	1.0	ug/L	EPA 608	3-Aug-11	HV
PCB-1248	<1.0	1.0	ug/L	EPA 608	3-Aug-11	HV
PCB-1254	<1.0	1.0	ug/L	EPA 608	3-Aug-11	HV
PCB-1260	<1.0	1.0	ug/L	EPA 608	3-Aug-11	HV
Toxaphene	<5.0	5.0	ug/L	EPA 608	3-Aug-11	HV

Primary Laboratories, Inc.
Results

3-Aug-11

Date Sampled: 19-Jul-11
Work Order No: 1107150-01
Client ID: **North Anna PS-Outfall 020**

Test Description	Final Result	Reporting Limit	Units of Measure	Method Numbers*	Date Analyzed	Tech. Initials
Cyanide	<0.01	0.01	mg/L	4500CN E	21-Jul-11	NA
Free Cyanide	<0.01	0.01	mg/L	4500CN E	21-Jul-11	NA
BOD	<3.0	3.0	mg/L	5210 B	20-Jul-11 at 12:00	NA
Sulfide	<0.05	0.05	mg/L	$4500S^{2-}E$	26-Jul-11 at 9:10	NA
Hydrogen Sulfide	<0.05	0.05	mg/L	376.1	1-Aug-11	HV
Nonylphenol	<0.01	0.01	mg/L	8270C	21-Jul-11	HV
Hexavalent Chromium	<0.005	0.005	mg/L	3500	20-Jul-11 at 9:30	NA
Bromide	2.30	0.01	mg/L	Titrimetric	2-Aug-11	PB
Color	10.0	5.0	PCU	2120 B	21-Jul-11 at 9:00	NA
MBAS	<0.01	0.01	mg/L	5540C	21-Jul-11	HV
Metals						
Chromium	<0.02	0.02	mg/L	3120 B	28-Jul-11	HV

* All methods are Standard Methods 18th Edition unless otherwise noted.

Signature: Barry L. Bragg Date: 8/3/11
Barry L. Bragg
Laboratory Manager

These analytical results are based upon materials provided by the client and are intended for the exclusive use of the client. These analytical results represent the best judgement of Primary Laboratories, Inc. Primary Laboratories, Inc. assumes no responsibility, express or implied, as to the interpretation of the analytical results contained in this report. This report is not to be reproduced except with the written approval of Primary Laboratories, Inc.

Location: North Anna PS	Requested by:	Priority:
Required Date: 30 days	Phone:	Date Analysis Complete:
Comment:	Sampled by:	Date Approved Released:

Bottle Types: Cn=Cyanide, FC=Fecals, EC = E coli, H_2S = Hydrogen sulfide, Asb = Asbestos, BOD=Biological Oxygen Demand
P/P=Pesticide / PCBs, TBT = Tributyltin, R = Radioactivity, Br = Bromide, Color, Sul = sulfide, Sur = Surfactants, DS = Dioxin screen

Preservatives: HCl=Hydrochloric acid, CS=Cu Sulfate, S=Sulfuric acid, N=Nitric acid, ZA=Zinc acetate, SH=Sodium Hydroxide

Tests Required 1= Cn, Free Cn, H_2S, BOD, Pest / PCBs, *Nonylphenol*, ~~[1,2,Diphenylhydrazine]~~
2 = *Cr3, Cr6*
3= [Br, Color], Sulfide, Surfactants

1107150

X - PLACE AN "X" IN THE BOX FOR SAMPLES TO BE SUBMITTED

System Lab Number	X	Sample ID	Sample Date	Sample Time	Comp	Grab	Cl, Screen [Cn]	Dechlor conf [mod?]	Sulfide Screen [Cn]	Cn + Free Cn	FC	EC	H_2S	Asb	BOD	P/P	TBT	Nonylphenol	1,2,Diphenylhydrazine	Cr3, Cr6	Br, Color	Sul	Sur	DS	Test Required	Notes
Preservative										SH			ZA,SH									ZA,SH				
		Outall North Anna 020	Flrida	1105		x	Pos / Neg	Yes / No	Pos / Neg	1		1	2		1	4		1		2	1	1	1		1,2,3	Do Pest / PCBs per attached list ~~For 1,2 Diphenylhydrazine, use Method 526 at QL = 0.1 ppb~~

Relinquished by: (Signature) WM	Date Flrida Time 1730	Received by: (Signature)	Date Time
Relinquished by: (Signature)	Date Time	Received by: (Signature) [illegible]	Date 7-19-11 Time 17:30

Primary Laboratories
7423 Lee Davis Road
Mechanicsville, VA 23111
804-559-9004

5.4°C

coc CPM NA 020.xlsx

DOMINION LABORATORY SERVICES

REPORT PRODUCED ON 09/15/2011

CERTIFICATE OF ANALYSIS TEST RESULTS BY SAMPLE

Location: NORTH ANNA

Submitter: GLENN BISHOP

System Laboratory Number: 391007
Description :OUTFALL 020

Sample Date: 07/19/2011

Parameter		Result	Method	Test Code	Analyst	Date Analyzed	Time Analyzed
Ammonia as N, PPM		0.07	SM18TH 4500NH3F	NH3	DAWNE01	07/28/2011	1642
Boron as B, PPM		0.15	SM18TH 4500-B B	B	DONNA13	08/03/2011	1100
COD, PPM		12.79	HACH 8000	COD	DONNA13	08/02/2011	1030
Fluoride as F, PPM		0.151	EPA 300	FIC	DAWNE01	08/04/2011	2056
NO3+NO2, PPM		0.22	EPA 353.2	NO3NO2	DAWNE01	07/21/2011	909
Oil and Grease, PPM	<	5.00	EPA 1664A	O&G	TANYA19	07/22/2011	930
Phenol, PPM		0.01	EPA 420.1	PHENOL	TANYA19	08/12/2011	1252
Sulfate as SO4, PPM		28.72	EPA 300	SO4IC	DAWNE01	08/04/2011	2056
TK Nitrogen as N,PPM		0.95	EPA 351.2	TKN	DONNA13	08/11/2011	1045
TOC, PPM		7.1	SM18TH 5310B	TOC	DONNA13	08/03/2011	1302
Total Phos. as P,PPM	<	0.05	SM18TH 4500-P	TP	TANYA19	08/11/2011	1325
Aluminum as Al, PPM		0.13	SM18TH 3111D	AL	DAWNE01	08/24/2011	1151
Antimony as Sb, ppb	<	1.	SM18TH 3113B	SBPPB	STEVE72	08/01/2011	951
Arsenic as As, ppb	<	3.	SM18TH 3113B	ASPPB	STEVE72	08/01/2011	844
Barium as Ba, ppb		43.	SM18TH 3113B	BAPPB	STEVE72	09/08/2011	1314
Beryllium as Be, ppb	<	0.2	SM18TH 3113B	BEPPB	STEVE72	09/13/2011	604
Cadmium as Cd, ppb	<	0.3	SM18TH 3113B	CDPPB	STEVE72	09/13/2011	1109
Chromium as Cr, ppb	<	1.	SM18TH 3113B	CRPPB	STEVE72	09/13/2011	1226
Cobalt as Co, ppb	<	0.6	SM18TH 3113B	COPPB	STEVE72	09/13/2011	618
Copper as Cu, ppb		2.	SM18TH 3113B	CUPPB	STEVE72	08/01/2011	1627
Iron as Fe, PPM	<	0.05	SM18TH 3111B	FE	DAWNE01	08/12/2011	957
Lead as Pb, ppb	<	1.	SM18TH 3113B	PBPPB	STEVE72	08/01/2011	1758
Magnesium as Mg, PPM		5.42	SM18TH 3111B	MG	DAWNE01	08/16/2011	1609
Manganese as Mn, PPM		0.08	SM18TH 3111B	MN	DAWNE01	08/12/2011	1046
Mercury as Hg, ppb	<	0.2	SM18TH 3112B	HGPPB	STEVE72	07/27/2011	743
Molybdenum as Mo,ppb		16.	SM18TH 3113B	MOPPB	STEVE72	09/09/2011	903
Nickel as Ni, ppb	<	5.	SM18TH 3113B	NIPPB	STEVE72	08/01/2011	1931
Selenium as Se, ppb	<	3.	SM18TH 3113B	SEPPB	STEVE72	08/01/2011	1030
Silver as Ag, ppb	<	0.1	SM18TH 3113B	AGPPB	STEVE72	09/09/2011	1034
Thallium as Tl, ppb	<	0.2	EPA 279.2	TLPPB	STEVE72	08/01/2011	1345
Tin as Sn, ppb	<	5.	SM18TH 3113B	SNPPB	STEVE72	09/06/2011	1006
Titanium as Ti, ppb	<	2.	EPA 283.2	TIPPB	STEVE72	09/13/2011	834
Zinc as Zn, PPM	<	0.010	SM18TH 3111B	ZN	DAWNE01	08/12/2011	1132
Methyl Chloride, ppb	<	1.10	EPA 624	VOA624	CHAR130	07/26/2011	1745
Methyl Bromide, ppb	<	1.40	EPA 624	VOA624	CHAR130	07/26/2011	1745
Vinyl Chloride, ppb	<	1.80	EPA 624	VOA624	CHAR130	07/26/2011	1745
Chloroethane, ppb	<	1.10	EPA 624	VOA624	CHAR130	07/26/2011	1745

DOMINION LABORATORY SERVICES

REPORT PRODUCED ON 09/15/2011

CERTIFICATE OF ANALYSIS TEST RESULTS BY SAMPLE

Location: NORTH ANNA

Submitter: GLENN BISHOP

System Laboratory Number: 391007
Description :OUTFALL 020

Sample Date: 07/19/2011

Parameter	Result	Method	Test Code	Analyst	Date Analyzed	Time Analyzed
Methylene Chloride, ppb	< 2.80	EPA 624	VOA624	CHAR130	07/26/2011	1745
Acrolein, ppb	< 10.00	EPA 624	VOA624	CHAR130	07/26/2011	1745
Acrylonitrile, ppb	< 1.50	EPA 624	VOA624	CHAR130	07/26/2011	1745
Trichlorofluoromethane, ppb	< 2.30	EPA 624	VOA624	CHAR130	07/26/2011	1745
1,1-Dichloroethylene, ppb	< 2.80	EPA 624	VOA624	CHAR130	07/26/2011	1745
1,1-Dichloroethane, ppb	< 4.70	EPA 624	VOA624	CHAR130	07/26/2011	1745
1,2-Trans-Dichloroethylene, ppb	< 1.60	EPA 624	VOA624	CHAR130	07/26/2011	1745
Chloroform, ppb	< 1.60	EPA 624	VOA624	CHAR130	07/26/2011	1745
1,2-Dichloroethane, ppb	< 2.80	EPA 624	VOA624	CHAR130	07/26/2011	1745
1,1,1-Trichloroethane, ppb	< 3.80	EPA 624	VOA624	CHAR130	07/26/2011	1745
Carbon Tetrachloride, ppb	< 2.80	EPA 624	VOA624	CHAR130	07/26/2011	1745
Dichlorobromomethane, ppb	< 2.20	EPA 624	VOA624	CHAR130	07/26/2011	1745
1,2-Dichloropropane, ppb	< 6.00	EPA 624	VOA624	CHAR130	07/26/2011	1745
Cis-1 3-Dichloropropylene, ppb	< 5.00	EPA 624	VOA624	CHAR130	07/26/2011	1745
Trans-1 3-Dichloropropylene, ppb	< 0.90	EPA 624	VOA624	CHAR130	07/26/2011	1745
Trichloroethylene, ppb	< 1.90	EPA 624	VOA624	CHAR130	07/26/2011	1745
Chlorodibromomethane, ppb	< 3.10	EPA 624	VOA624	CHAR130	07/26/2011	1745
Benzene, ppb	< 4.40	EPA 624	VOA624	CHAR130	07/26/2011	1745
1,1,2-Trichloroethane, ppb	< 5.00	EPA 624	VOA624	CHAR130	07/26/2011	1745
2-Chloroethylvinyl Ether, ppb	< 1.20	EPA 624	VOA624	CHAR130	07/26/2011	1745
Bromoform, ppb	< 4.70	EPA 624	VOA624	CHAR130	07/26/2011	1745
1,1,2,2-Tetrachloroethane, ppb	< 6.90	EPA 624	VOA624	CHAR130	07/26/2011	1745
Tetrachloroethylene, ppb	< 4.10	EPA 624	VOA624	CHAR130	07/26/2011	1745
Toluene, ppb	< 6.00	EPA 624	VOA624	CHAR130	07/26/2011	1745
Chlorobenzene, ppb	< 6.00	EPA 624	VOA624	CHAR130	07/26/2011	1745
Ethylbenzene, ppb	< 7.20	EPA 624	VOA624	CHAR130	07/26/2011	1745
1,3 Dichlorobenzene, ppb	< 5.00	EPA 624	VOA624	CHAR130	07/26/2011	1745
1,4 Dichlorobenzene, ppb	< 5.00	EPA 624	VOA624	CHAR130	07/26/2011	1745
1,2 Dichlorobenzene, ppb	< 5.00	EPA 624	VOA624	CHAR130	07/26/2011	1745
Phenol, ppb	< 2.70	EPA 625	ACID625	CHAR130	08/09/2011	117
2-Chlorophenol, ppb	< 3.30	EPA 625	ACID625	CHAR130	08/09/2011	117
2-Nitrophenol, ppb	< 3.60	EPA 625	ACID625	CHAR130	08/09/2011	117
2,4-Dimethylphenol, ppb	< 5.20	EPA 625	ACID625	CHAR130	08/09/2011	117
2,4-Dichlorophenol, ppb	< 5.60	EPA 625	ACID625	CHAR130	08/09/2011	117
4-Chloro-3-Methylphenol, ppb	< 7.50	EPA 625	ACID625	CHAR130	08/09/2011	117
2,4,6-Trichlorophenol, ppb	< 2.70	EPA 625	ACID625	CHAR130	08/09/2011	117
2,4-Dinitrophenol, ppb	< 42.00	EPA 625	ACID625	CHAR130	08/09/2011	117

DOMINION LABORATORY SERVICES
==========
REPORT PRODUCED ON 09/15/2011

CERTIFICATE OF ANALYSIS TEST RESULTS BY SAMPLE

Location: NORTH ANNA

Submitter: GLENN BISHOP

System Laboratory Number: 391007
Description :OUTFALL 020

Sample Date: 07/19/2011

Parameter	Result	Method	Test Code	Analyst	Date Analyzed	Time Analyzed
4-Nitrophenol, ppb	< 2.40	EPA 625	ACID625	CHAR130	08/09/2011	117
2-Methyl-4,6-Dinitrophenol, ppb	< 24.00	EPA 625	ACID625	CHAR130	08/09/2011	117
Pentachlorophenol, ppb	< 3.60	EPA 625	ACID625	CHAR130	08/09/2011	117
Dis. Tl, ppb	< 0.2	EPA 279.2	TLDISPPB	STEVE72	08/01/2011	1345
Dis. Ti, ppb	< 2.	EPA 283.2	TIDISPPB	STEVE72	09/13/2011	834
Dis. Sn, ppb	< 5.	SM18TH 3113B	SNDISPPB	STEVE72	09/06/2011	1006
Dis. Se, ppb	< 3.	SM18TH 3113B	SEDISPPB	STEVE72	08/01/2011	1030
Dis. Sb, ppb	< 1.	SM18TH 3113B	SBDISPPB	STEVE72	08/01/2011	951
Dis. Pb, ppb	< 1.	SM18TH 3113B	PBDISPPB	STEVE72	08/01/2011	1758
Dis. Ni, ppb	< 5.	SM18TH 3113B	NIDISPPB	STEVE72	08/01/2011	1931
Dis. Mo, ppb	15.	SM18TH 3113B	MODISPPB	STEVE72	09/09/2011	903
Dis. Hg, ppb	< 0.2	SM18TH 3112B	HGDISPPB	STEVE72	07/27/2011	743
Dis. Cu, ppb	2.	SM18TH 3113B	CUDISPPB	STEVE72	08/01/2011	1627
Dis. Cr, ppb	< 1.	SM18TH 3113B	CRDISPPB	STEVE72	09/13/2011	1226
Dis. Co, ppb	< 0.6	SM18TH 3113B	CODISPPB	STEVE72	09/13/2011	618
Dis. Cd, ppb	< 0.3	SM18TH 3113B	CDDISPPB	STEVE72	09/13/2011	1109
Dis. Be, ppb	< 0.2	SM18TH 3113B	BEDISPPB	STEVE72	09/13/2011	604
Dis. Ba, ppb	41.	SM18TH 3113B	BADISPPB	STEVE72	09/08/2011	1314
Dis. As, ppb	< 3.	SM18TH 3113B	ASDISPPB	STEVE72	08/01/2011	844
Dis. Ag, ppb	< 0.1	SM18TH 3113B	AGDISPPB	STEVE72	09/09/2011	1034
Dis. Zn, PPM	< 0.010	SM18TH 3111B	ZNDIS	DAWNE01	08/12/2011	1132
Dis. Mn, PPM	0.02	SM18TH 3111B	MNDIS	DAWNE01	08/12/2011	1046
Dis. Mg, PPM	5.78	SM18TH 3111B	MGDIS	DAWNE01	08/16/2011	1609
Dis. Fe, PPM	< 0.05	SM18TH 3111B	FEDIS	DAWNE01	08/12/2011	957
Dis. Al, PPM	< 0.09	SM18TH 3111D	ALDIS	DAWNE01	08/24/2011	1151
T-Dis. Solids, PPM	173.0	SM18TH 2540C	TDS	TANYA19	07/21/2011	1400
Nitrate as N, PPM	< 0.01	EPA 353.2	NO3	DAWNE01	07/21/2011	909
Chloride as Cl, PPM	18.12	EPA 300	CLIC	DAWNE01	08/04/2011	2056
T-Hard. as CaCO3,PPM	35.91	SM18TH 2340C	HARD	TANYA19	07/26/2011	930
2,4-D, ppb	< 10.00	EPA 615	8151GC	HERBE31	08/01/2011	
Silvex, ppb	< 2.00	EPA 615	8151GC	HERBE31	08/01/2011	
Chlorpyrifos, ppb	< 0.2000	EPA 622	ORGPHOS	HERBE31	07/27/2011	
Demeton, ppb	< 1.0000	EPA 622	ORGPHOS	HERBE31	07/27/2011	
Diazinon, ppb	< 1.0000	EPA 622	ORGPHOS	HERBE31	07/27/2011	
Guthion, ppb	< 1.0000	EPA 622	ORGPHOS	HERBE31	07/27/2011	
Malathion, ppb	< 1.0000	EPA 622	ORGPHOS	HERBE31	07/27/2011	
Parathion, ppb	< 1.0000	EPA 622	ORGPHOS	HERBE31	07/27/2011	

DOMINION LABORATORY SERVICES

REPORT PRODUCED ON 09/15/2011

CERTIFICATE OF ANALYSIS TEST RESULTS BY SAMPLE

Location: NORTH ANNA

Submitter: GLENN BISHOP

System Laboratory Number: 391007
Description :OUTFALL 020

Sample Date: 07/19/2011

Parameter	Result	Method	Test Code	Analyst	Date Analyzed	Time Analyzed
Aldrin, ppb	< 0.050	EPA 608	608GC	HERBE31	08/03/2011	
Chlordane, ppb	< 0.200	EPA 608	608GC	HERBE31	08/03/2011	
Dieldrin, ppb	< 0.100	EPA 608	608GC	HERBE31	08/03/2011	
4,4-DDT, ppb	< 0.100	EPA 608	608GC	HERBE31	08/03/2011	
4,4-DDE, ppb	< 0.100	EPA 608	608GC	HERBE31	08/03/2011	
4,4-DDD, ppb	< 0.100	EPA 608	608GC	HERBE31	08/03/2011	
Endosulfan Sulfate, ppb	< 0.100	EPA 608	608GC	HERBE31	08/03/2011	
Endosulfan I, ppb	< 0.100	EPA 608	608GC	HERBE31	08/03/2011	
Endosulfan II, ppb	< 0.100	EPA 608	608GC	HERBE31	08/03/2011	
Endrin, ppb	< 0.100	EPA 608	608GC	HERBE31	08/03/2011	
Alpha-BHC, ppb	< 0.100	EPA 608	608GC	HERBE31	08/03/2011	
Beta-BHC, ppb	< 0.100	EPA 608	608GC	HERBE31	08/03/2011	
Delta-BHC, ppb	< 0.100	EPA 608	608GC	HERBE31	08/03/2011	
Gamma-BHC (Lindane), ppb	< 0.100	EPA 608	608GC	HERBE31	08/03/2011	
Heptachlor, ppb	< 0.050	EPA 608	608GC	HERBE31	08/03/2011	
Kepone, ppb	< 0.100	EPA 608	608GC	HERBE31	08/03/2011	
Methoxychlor, ppb	< 0.100	EPA 608	608GC	HERBE31	08/03/2011	
Mirex, ppb	< 0.100	EPA 608	608GC	HERBE31	08/03/2011	
Endrin Aldehyde, ppb	< 0.100	EPA 608	608GC	HERBE31	08/03/2011	
Heptachlor Epoxide, ppb	< 0.100	EPA 608	608GC	HERBE31	08/03/2011	
Toxaphene, ppb	< 5.000	EPA 608	608GC	HERBE31	08/03/2011	
Arochlor 1016, ppb	< 1.0	EPA 608	608PCB	HERBE31	08/03/2011	
Arochlor 1221, ppb	< 1.0	EPA 608	608PCB	HERBE31	08/03/2011	
Arochlor 1232, ppb	< 1.0	EPA 608	608PCB	HERBE31	08/03/2011	
Arochlor 1242, ppb	< 1.0	EPA 608	608PCB	HERBE31	08/03/2011	
Arochlor 1248, ppb	< 1.0	EPA 608	608PCB	HERBE31	08/03/2011	
Arochlor 1254, ppb	< 1.0	EPA 608	608PCB	HERBE31	08/03/2011	
Arochlor 1260, ppb	< 1.0	EPA 608	608PCB	HERBE31	08/03/2011	
Cyanide as CN, PPM	< 0.010	SM 4500CN E	CN	HERBE31	07/21/2011	
BOD, PPM	< 3.00	SM 5210 B	BOD	HERBE31	07/20/2011	1200
Sulfide, PPM	< 0.05	SM18TH 4500S 2 E	SULFID	HERBE31	07/26/2011	910
Hydrogen Sulfide, PPM	< 0.05	EPA 376.1	HYDSULF	HERBE31	08/01/2011	
Nonylphenol, ppb	< 10.0	EPA 8270C	NONYLPNL	HERBE31	07/21/2011	
Chrom. +6 as Cr6,PPM	< 0.005	SM 3500-CR D	CR6	HERBE31	07/20/2011	930
Bromide as Br, PPM	2.30	EPA 320.1	BR	HERBE31	08/02/2011	
Color, PCU	10.0	SM18TH 2120B	CLR	HERBE31	07/21/2011	900
MBAS as LAS, PPM	< 0.010	SM 5540C	SURF	HERBE31	07/21/2011	

DOMINION LABORATORY SERVICES

REPORT PRODUCED ON 09/15/2011

CERTIFICATE OF ANALYSIS TEST RESULTS BY SAMPLE

Location: NORTH ANNA

Submitter: GLENN BISHOP

System Laboratory Number: 391007
Description :OUTFALL 020

Sample Date: 07/19/2011

Parameter	Result	Method	Test Code	Analyst	Date Analyzed	Time Analyzed
Chromium as Cr, PPM	< 0.02	SM18TH 3120B	CR-ICP	HERBE31	07/28/2011	
Gross Alpha, pCi/L	< 2.650	EPA 900.0	RADIO	HERBE31	07/26/2011	1255
Gross Beta, pCi/L	3.660	EPA 900.0	RADIO	HERBE31	07/26/2011	1255
N-Nitrosodimethylamine, ppb	< 6.20	EPA 625	BN625	CHAR130	08/08/2011	1745
Bis(-2-Chloroethyl) ether, ppb	< 5.70	EPA 625	BN625	CHAR130	08/08/2011	1745
Bis(2-Chloroisopropyl) ether, ppb	< 5.70	EPA 625	BN625	CHAR130	08/08/2011	1745
N-nitroso-Di-n-propylamine, ppb	< 3.60	EPA 625	BN625	CHAR130	08/08/2011	1745
Hexachloroethane, ppb	< 2.40	EPA 625	BN625	CHAR130	08/08/2011	1745
Nitrobenzene, ppb	< 4.20	EPA 625	BN625	CHAR130	08/08/2011	1745
Isophorone, ppb	< 5.10	EPA 625	BN625	CHAR130	08/08/2011	1745
Bis(-2-Chloroethoxy) Methane, ppb	< 5.30	EPA 625	BN625	CHAR130	08/08/2011	1745
1,2,4-Trichlorobenzene, ppb	< 7.90	EPA 625	BN625	CHAR130	08/08/2011	1745
Naphthalene, ppb	< 3.80	EPA 625	BN625	CHAR130	08/08/2011	1745
Hexachlorobutadiene, ppb	< 1.80	EPA 625	BN625	CHAR130	08/08/2011	1745
Hexachlorocyclopentadiene, ppb	< 10.00	EPA 625	BN625	CHAR130	08/08/2011	1745
2-Chloronaphthalene, ppb	< 4.60	EPA 625	BN625	CHAR130	08/08/2011	1745
Dimethyl Phthalate, ppb	< 7.50	EPA 625	BN625	CHAR130	08/08/2011	1745
Acenaphthylene, ppb	< 3.50	EPA 625	BN625	CHAR130	08/08/2011	1745
2,6-Dinitrotoluene, ppb	< 3.40	EPA 625	BN625	CHAR130	08/08/2011	1745
Acenaphthene, ppb	< 3.00	EPA 625	BN625	CHAR130	08/08/2011	1745
2,4-Dinitrotoluene, ppb	< 5.70	EPA 625	BN625	CHAR130	08/08/2011	1745
Diethylphthalate, ppb	< 7.40	EPA 625	BN625	CHAR130	08/08/2011	1745
Fluorene, ppb	< 2.20	EPA 625	BN625	CHAR130	08/08/2011	1745
4-Chlorophenyl-phenylether, ppb	< 4.20	EPA 625	BN625	CHAR130	08/08/2011	1745
N-nitrosodiphenylamine, ppb	< 2.70	EPA 625	BN625	CHAR130	08/08/2011	1745
1,2-Diphenylhydrazine, ppb	< 8.80	EPA 625	BN625	CHAR130	08/08/2011	1745
4-Bromophenyl-phenylether, ppb	< 3.00	EPA 625	BN625	CHAR130	08/08/2011	1745
Hexachlorobenzene, ppb	< 3.10	EPA 625	BN625	CHAR130	08/08/2011	1745
Phenanthrene, ppb	< 5.40	EPA 625	BN625	CHAR130	08/08/2011	1745
Anthracene, ppb	< 1.90	EPA 625	BN625	CHAR130	08/08/2011	1745
Di-n-Butylphthalate, ppb	< 6.40	EPA 625	BN625	CHAR130	08/08/2011	1745
Fluoranthene, ppb	< 2.20	EPA 625	BN625	CHAR130	08/08/2011	1745
Benzidine, ppb	< 63.00	EPA 625	BN625	CHAR130	08/08/2011	1745
Pyrene, ppb	< 3.80	EPA 625	BN625	CHAR130	08/08/2011	1745
Butylbenzylphthalate, ppb	< 2.50	EPA 625	BN625	CHAR130	08/08/2011	1745
Chrysene, ppb	< 2.50	EPA 625	BN625	CHAR130	08/08/2011	1745
3,3'-Dichlorobenzidine, ppb	< 16.50	EPA 625	BN625	CHAR130	08/08/2011	1745

DOMINION LABORATORY SERVICES

REPORT PRODUCED ON 09/15/2011

CERTIFICATE OF ANALYSIS TEST RESULTS BY SAMPLE

Location: NORTH ANNA

Submitter: GLENN BISHOP

System Laboratory Number: 391007
Description :OUTFALL 020

Sample Date: 07/19/2011

Parameter	Result	Method	Test Code	Analyst	Date Analyzed	Time Analyzed
Benzo (a) Anthracene, ppb	< 7.80	EPA 625	BN625	CHAR130	08/08/2011	1745
Bis(2-ethylhexyl) Phthalate, ppb	< 2.50	EPA 625	BN625	CHAR130	08/08/2011	1745
Di-n-octyl Phthalate, ppb	< 2.50	EPA 625	BN625	CHAR130	08/08/2011	1745
Benzo (b) fluoranthene, ppb	< 4.80	EPA 625	BN625	CHAR130	08/08/2011	1745
Benzo (k) fluoranthene, ppb	< 2.50	EPA 625	BN625	CHAR130	08/08/2011	1745
Benzo (a) pyrene, ppb	< 2.50	EPA 625	BN625	CHAR130	08/08/2011	1745
Indeno (1 2 3-cd) pyrene, ppb	< 3.70	EPA 625	BN625	CHAR130	08/08/2011	1745
Dibenzo (a h) anthracene, ppb	< 2.50	EPA 625	BN625	CHAR130	08/08/2011	1745
Benzo (g h i) perylene, ppb	< 4.10	EPA 625	BN625	CHAR130	08/08/2011	1745

DOMINION LABORATORY SERVICES

REPORT PRODUCED ON 09/15/2011

CERTIFICATE OF ANALYSIS TEST RESULTS BY SAMPLE

Location: NORTH ANNA

Submitter: GLENN BISHOP

System Laboratory Number: 391008
Description :EQUIP BLANK

Sample Date: 07/19/2011

Parameter	Result	Method	Test Code	Analyst	Date Analyzed	Time Analyzed
Aluminum as Al, PPM	< 0.09	SM18TH 3111D	AL	DAWNE01	08/24/2011	1151
Antimony as Sb, ppb	< 1.	SM18TH 3113B	SBPPB	STEVE72	08/01/2011	951
Arsenic as As, ppb	< 3.	SM18TH 3113B	ASPPB	STEVE72	08/01/2011	844
Barium as Ba, ppb	< 3.	SM18TH 3113B	BAPPB	STEVE72	09/08/2011	1314
Beryllium as Be, ppb	< 0.2	SM18TH 3113B	BEPPB	STEVE72	09/13/2011	604
Cadmium as Cd, ppb	< 0.3	SM18TH 3113B	CDPPB	STEVE72	09/13/2011	1109
Chromium as Cr, ppb	< 1.	SM18TH 3113B	CRPPB	STEVE72	09/13/2011	1226
Cobalt as Co, ppb	< 0.6	SM18TH 3113B	COPPB	STEVE72	09/13/2011	618
Copper as Cu, ppb	< 1.	SM18TH 3113B	CUPPB	STEVE72	08/01/2011	1627
Iron as Fe, PPM	< 0.05	SM18TH 3111B	FE	DAWNE01	08/12/2011	957
Lead as Pb, ppb	< 1.	SM18TH 3113B	PBPPB	STEVE72	08/01/2011	1758
Magnesium as Mg, PPM	< 0.01	SM18TH 3111B	MG	DAWNE01	08/16/2011	1609
Manganese as Mn, PPM	< 0.02	SM18TH 3111B	MN	DAWNE01	08/12/2011	1046
Mercury as Hg, ppb	< 0.2	SM18TH 3112B	HGPPB	STEVE72	07/27/2011	743
Molybdenum as Mo,ppb	< 1.	SM18TH 3113B	MOPPB	STEVE72	09/09/2011	903
Nickel as Ni, ppb	< 5.	SM18TH 3113B	NIPPB	STEVE72	08/01/2011	1931
Selenium as Se, ppb	< 3.	SM18TH 3113B	SEPPB	STEVE72	08/01/2011	1030
Silver as Ag, ppb	< 0.1	SM18TH 3113B	AGPPB	STEVE72	09/09/2011	1034
Thallium as Tl, ppb	< 0.2	EPA 279.2	TLPPB	STEVE72	08/01/2011	1345
Tin as Sn, ppb	< 5.	SM18TH 3113B	SNPPB	STEVE72	09/06/2011	1006
Titanium as Ti, ppb	< 2.	EPA 283.2	TIPPB	STEVE72	09/13/2011	834
Zinc as Zn, PPM	< 0.010	SM18TH 3111B	ZN	DAWNE01	08/12/2011	1132

WO# 418571

Location:	North Anna PS	Requested by:	Glenn Bishop	Priority:	9
Required Date: 60 days	7/16/11	Phone:		Date Analysis Complete:	8-19-11
Comment:		Sampled by:	WGB	Date Approved Released:	9-19-11

Bottle Types: O/G=Oil and Grease, PT=Phenols Total, V=Volatiles, M=Metals, A=[Ammonia,TKN,TP,COD,NO_3/NO_2], BOD=Biological Oxygen Demand
TOC=Total Organic Carbon, TSS=[Total Suspended Solids,B,F,NO_3/NO_2,SO_4,TDS,Chloride]
ABN=Acid Base Neutrals, PP=Posticide/PCBs

Preservatives: HCl=Hydrochloric acid, CS=Cu Sulfate, S=Sulfuric acid, N=Nitric acid, ZA=Zinc acetate, SH=Sodium Hydroxide

Tests Required 1= O/G, Phenol total, Volatiles, [Ammonia, TKN, TP, COD, NO_3/NO_2], TOC
2= [TDS, B, F, NO_3/NO_2, Nitrate N, Chlorides, SO_4]
3= ABN
4= TR and Diss Metals Al,Ba,Co,Fe,Mg,Mo,Mn,Sn,Ti,Sb,As,Be,Cd,Cr,Cu,Pb,Hg,Ni,Se,Ag,Tl,Zn + Hardness

NOTE:

Consider:
Flow
Temp (W+S)

X - PLACE AN "X" IN THE BOX FOR SAMPLES TO BE SUBMITTED

System Lab Number	x	Sample ID	Sample Date	Sample Time	Comp	Grab	Cl_2 Screen [ABN,Vol]	Dechlor conf limed?	Project Code	O/G (HCl)	PT (CS,S)	V (HCl)	M (N)	A (S)	BOD	TOC (HCl)	TSS	ABN	P/P	Test Required	Notes
391007	X	Outfall 020	7/19/11	1105		X	Pos / Neg	Yes / No	Cons 1	1	1	6	2	1		1	1	3		1,2,3,4	Temp = 30.7
391008	X	Equip b	7/19/11	1100		X			Cons-Metals				1							4	
391009	X	Intake	7/19/11	1300		X			Cons 1	1	1	6	2	1		1	1	3		1,2,3,4	

Relinquished by: (Signature) WGB	Date 7/20/11 Time 0810	Received by: (Signature)	Date 7/20/11 Time 0810
Relinquished by: (Signature)	Date Time	Received by: (Signature)	Date Time

Dominion Resources
Laboratory Services
11202 Old Stage Road
Chester, VA 23836

Dominion Laboratory Login Checklist

Station/Study: NA		WO#: 418571	
Thermometer Used: 61951674 or 61951693		Temp: 6.3°C	
	Type of Ice: Wet Blue None		
Chain of Custody Present	Yes	No	N/A
Chain of Custody Filled Out	Yes	No	N/A
Chain of Custody Relinquished	Yes	No	N/A
Sampler Name on COC	Yes	No	N/A
Samples Labels match COC	Yes	No	N/A
Includes date/time/ID/Analysis	Yes	No	N/A
All entries in Ink	Yes	No	N/A
Samples Arrived within Holding Time	Yes	No	N/A
Short Hold Time Analysis (<72hr)	Yes	No	N/A
Rush Turn Around Time Requested	Yes	No	N/A
Sufficient Volume	Yes	No	N/A
Correct Containers Used	Yes	No	N/A
Containers Used: (circle)	NH3	Solids	O&G
	TOC	OPO4	ABN
	IC	DRO	Phenol
	Hardness	Radioactivity	Volatiles
	Grain Size	Metals (Total or Dissolved)	
	Other:		
# of Bottles on COC correct	Yes	No	N/A
Filtered Volume received for Dissolved Tests	Yes	No	N/A
Custody Seal Intact	Yes	No	N/A
Date/Time Received: 7/20/11 @810			
Received by: TM2			
Due Date on COC match worksheet	Yes	No	N/A
Tests Required on COC match worksheet	Yes	No	N/A
Verified by: [signature]		Date: 7/20/11	

Pace Analytical®
www.pacelabs.com

Pace Analytical Services, Inc.
1638 Roseytown Road - Suites 2,3,4
Greensburg, PA 15601
(724)850-5600

July 31, 2011

Mr. Glenn Bishop
Dominion Environmental Biology
4111 Castlewood Road
Richmond, VA 23234

RE: Project: North Anna 009
Pace Project No.: 3050676

Dear Mr. Bishop:
Enclosed are the analytical results for sample(s) received by the laboratory on July 22, 2011. The results relate only to the samples included in this report. Results reported herein conform to the most current TNI standards, where applicable, unless otherwise narrated in the body of the report.

If you have any questions concerning this report, please feel free to contact me.

Sincerely,

Jacquelyn Collins

jacquelyn.collins@pacelabs.com
Project Manager

Enclosures

Pace Analytical Services, Inc.
1638 Roseytown Road - Suites 2,3,4
Greensburg, PA 15601
(724)850-5600

CERTIFICATIONS

Project: North Anna 009
Pace Project No.: 3050676

Pennsylvania Certification IDs
1638 Roseytown Road Suites 2,3&4, Greensburg, PA 15601
Alabama Certification #: 41590
Arizona Certification #: AZ0734
Arkansas Certification
California/NELAC Certification #: 04222CA
Colorado Certification
Connecticut Certification #: PH 0694
Delaware Certification
Florida/NELAC Certification #: E87683
Guam/PADEP Certification
Hawaii/PADEP Certification
Idaho Certification
Illinois/PADEP Certification
Indiana/PADEP Certification
Iowa Certification #: 391
Kansas/NELAC Certification #: E-10358
Kentucky Certification #: 90133
Louisiana/NELAC Certification #: LA080002
Louisiana/NELAC Certification #: 4086
Maine Certification #: PA0091
Maryland Certification #: 308
Massachusetts Certification #: M-PA1457
Michigan/PADEP Certification
Missouri Certification #: 235
Montana Certification #: Cert 0082
Nevada Certification
New Hampshire/NELAC Certification #: 2976
New Jersey/NELAC Certification #: PA 051
New Mexico Certification
New York/NELAC Certification #: 10888
North Carolina Certification #: 42706
Oregon/NELAC Certification #: PA200002
Pennsylvania/NELAC Certification #: 65-00282
Puerto Rico Certification #: PA01457
South Dakota Certification
Tennessee Certification #: TN2867
Texas/NELAC Certification #: T104704188-09 TX
Utah/NELAC Certification #: ANTE
Virgin Island/PADEP Certification
Virginia Certification #: 00112
Washington Certification #: C1941
West Virginia Certification #: 143
Wisconsin/PADEP Certification
Wyoming Certification #: 8TMS-Q

This report shall not be reproduced, except in full,
without the written consent of Pace Analytical Services, Inc..

Pace Analytical Services, Inc.
1638 Roseytown Road - Suites 2,3,4
Greensburg, PA 15601
(724)850-5600

SAMPLE SUMMARY

Project: North Anna 009
Pace Project No.: 3050676

Lab ID	Sample ID	Matrix	Date Collected	Date Received
3050676001	**North Anna 009**	Water	07/19/11 10:50	07/22/11 10:00

This report shall not be reproduced, except in full,
without the written consent of Pace Analytical Services, Inc..

Pace Analytical Services, Inc.
1638 Roseytown Road - Suites 2,3,4
Greensburg, PA 15601
(724)850-5600

SAMPLE ANALYTE COUNT

Project: North Anna 009
Pace Project No.: 3050676

Lab ID	Sample ID	Method	Analysts	Analytes Reported	Laboratory
3050676001	**North Anna 009**	EPA 900.0m	JC2	2	PASI-PA

This report shall not be reproduced, except in full,
without the written consent of Pace Analytical Services, Inc..

Pace Analytical Services, Inc.
1638 Roseytown Road - Suites 2,3,4
Greensburg, PA 15601
(724)850-5600

PROJECT NARRATIVE

Project: North Anna 009
Pace Project No.: 3050676

Method: **EPA 900.0m**
Description: 900.0 Gross Alpha/Beta
Client: Dominion Environmental Biology
Date: July 31, 2011

General Information:
1 sample was analyzed for EPA 900.0m. All samples were received in acceptable condition with any exceptions noted below.

Hold Time:
The samples were analyzed within the method required hold times with any exceptions noted below.

Method Blank:
All analytes were below the report limit in the method blank with any exceptions noted below.

Laboratory Control Spike:
All laboratory control spike compounds were within QC limits with any exceptions noted below.

Matrix Spikes:
All percent recoveries and relative percent differences (RPDs) were within acceptance criteria with any exceptions noted below.

Duplicate Sample:
All duplicate sample results were within method acceptance criteria with any exceptions noted below.

Additional Comments:

This data package has been reviewed for quality and completeness and is approved for release.

This report shall not be reproduced, except in full,
without the written consent of Pace Analytical Services, Inc..

Pace Analytical Services, Inc.
1638 Roseytown Road - Suites 2,3,4
Greensburg, PA 15601
(724)850-5600

ANALYTICAL RESULTS

Project: North Anna 009
Pace Project No.: 3050676

Sample: North Anna 009 **Lab ID: 3050676001** Collected: 07/19/11 10:50 Received: 07/22/11 10:00 Matrix: Water
PWS: Site ID: Sample Type:

Parameters	Method	Act ± Unc (MDC)	Units	Analyzed	CAS No.	Qual
Gross Alpha	EPA 900.0m	**0.0669 ± 0.603 (1.70)**	pCi/L	07/26/11 12:55	12587-46-1	
Gross Beta	EPA 900.0m	**1.65 ± 1.14 (2.22)**	pCi/L	07/26/11 12:55	12587-47-2	

This report shall not be reproduced, except in full,
without the written consent of Pace Analytical Services, Inc..

Pace Analytical Services, Inc.
1638 Roseytown Road - Suites 2,3,4
Greensburg, PA 15601
(724)850-5600

QUALITY CONTROL DATA

Project: North Anna 009
Pace Project No.: 3050676

QC Batch: RADC/9036
QC Batch Method: EPA 900.0m
Analysis Method: EPA 900.0m
Analysis Description: 900.0 Gross Alpha/Beta
Associated Lab Samples: 3050676001

METHOD BLANK: 324319
Matrix: Water
Associated Lab Samples: 3050676001

Parameter	Act ± Unc (MDC)	Units	Analyzed	Qualifiers
Gross Alpha	-0.164 ± 0.796 (2.25)	pCi/L	07/26/11 12:57	
Gross Beta	-0.606 ± 0.796 (2.15)	pCi/L	07/26/11 12:57	

This report shall not be reproduced, except in full,
without the written consent of Pace Analytical Services, Inc..

Pace Analytical Services, Inc.
1638 Roseytown Road - Suites 2,3,4
Greensburg, PA 15601
(724)850-5600

QUALIFIERS

Project: North Anna 009
Pace Project No.: 3050676

DEFINITIONS

DF - Dilution Factor, if reported, represents the factor applied to the reported data due to changes in sample preparation, dilution of the sample aliquot, or moisture content.

ND - Not Detected at or above adjusted reporting limit.

J - Estimated concentration above the adjusted method detection limit and below the adjusted reporting limit.

MDL - Adjusted Method Detection Limit.

S - Surrogate

1,2-Diphenylhydrazine (8270 listed analyte) decomposes to Azobenzene.

Consistent with EPA guidelines, unrounded data are displayed and have been used to calculate % recovery and RPD values.

LCS(D) - Laboratory Control Sample (Duplicate)

MS(D) - Matrix Spike (Duplicate)

DUP - Sample Duplicate

RPD - Relative Percent Difference

NC - Not Calculable.

SG - Silica Gel - Clean-Up

U - Indicates the compound was analyzed for, but not detected.

N-Nitrosodiphenylamine decomposes and cannot be separated from Diphenylamine using Method 8270. The result reported for each analyte is a combined concentration.

Act - Activity

Unc - Uncertainty

(MDC) - Minimum Detectable Concentration

Pace Analytical is TNI accredited. Contact your Pace PM for the current list of accredited analytes.

LABORATORIES

PASI-PA Pace Analytical Services - Greensburg

This report shall not be reproduced, except in full,
without the written consent of Pace Analytical Services, Inc..

Pace Analytical™
www.pacelabs.com

CHAIN-OF-CUSTODY / Analytical Request Document

The Chain-of-Custody is a LEGAL DOCUMENT. All relevant fields must be completed accurately.

Page: 1 of 1

Section A Required Client Information:

Company:	Dominion Environmental Biology
Address:	4111 Castlewood Road
	Richmond, VA 23234
Email To:	glenn.bishop@dom.com
Phone: 804-350-6918	Fax: 888-342-0629
Requested Due Date/TAT:	Normal

Section B Required Project Information:

Report To:	Glenn Bishop
Copy To:	
Purchase Order No.:	Mastercard
Project Name:	
Project Number:	

Section C Invoice Information:

Attention:	Glenn Bishop
Company Name:	Dominion
Address:	4111 Castlewood Road 23234
Pace Quote Reference:	46012743
Pace Project Manager:	
Pace Profile #:	

REGULATORY AGENCY

☐ NPDES ☐ GROUND WATER ☐ DRINKING WATER
☐ UST ☐ RCRA ☐ OTHER _____

Site Location STATE: VA

Section D Required Client Information

SAMPLE ID (A-Z, 0-9 / ,-) Sample IDs MUST BE UNIQUE

Valid Matrix Codes

MATRIX	CODE
DRINKING WATER	DW
WATER	WT
WASTE WATER	WW
PRODUCT	P
SOIL/SOLID	SL
OIL	OL
WIPE	WP
AIR	AR
OTHER	OT
TISSUE	TS

Requested Analysis Filtered (Y/N)

ITEM #	SAMPLE ID	MATRIX CODE (see valid codes to left)	SAMPLE TYPE (G=GRAB C=COMP)	COLLECTED COMPOSITE START DATE	COLLECTED COMPOSITE START TIME	COLLECTED COMPOSITE END/GRAB DATE	COLLECTED COMPOSITE END/GRAB TIME	SAMPLE TEMP AT COLLECTION	# OF CONTAINERS	Unpreserved	H_2SO_4	HNO_3	HCl	NaOH	$Na_2S_2O_3$	Methanol	Other	Analysis Test (Y/N)	Gross Alpha	Gross Beta	Strontium 90	Uranium	Tritium					Pace Project No./ Lab I.D. 30500676
1	North Anna 009		G	7/19/11		1000			1	X									X	X						001		Note: If Gross Alpha exceeds
2																												5 picocuries / liter, then analyze
3																												for Radium 226 and Radium 228
4																												
5																												
6																												
7																												
8																												
9																												
10																												
11																												
12																												

ADDITIONAL COMMENTS	RELINQUISHED BY / AFFILIATION	DATE	TIME	ACCEPTED BY / AFFILIATION	DATE	TIME	SAMPLE CONDITIONS			
	WMB	7/21/11	0900	[signature]	7/22/11	1000	NA	N	N	Y

SAMPLER NAME AND SIGNATURE			Temp in °C	Received on Ice (Y/N)
PRINT Name of SAMPLER: Glenn Bishop			Custody Sealed Cooler (Y/N)	Samples Intact (Y/N)
SIGNATURE of SAMPLER: WMB	DATE Signed (MM/DD/YY): 7/21/11			

*Important Note: By signing this form you are accepting Pace's NET 30 day payment terms and agreeing to late charges of 1.5% per month for any invoices not paid within 30 days.

Sample Condition Upon Receipt

Pace Analytical

Client Name: Dominion Env. Project # 30506076

Courier: ☐ Fed Ex ☐ UPS ☐ USPS ☐ Client ☐ Commercial ☐ Pace Other _____

Tracking #: 1Z62V9750193680245

Custody Seal on Cooler/Box Present: ☐ yes ☑ no Seals intact: ☐ yes ☐ no

Optional
Proj. Due Date:
Proj. Name:

Packing Material: ☐ Bubble Wrap ☐ Bubble Bags ☑ None ☐ Other _____

Thermometer Used 3 5 Type of Ice: Wet Blue (None) ☐ Samples on ice, cooling process has begun

Cooler Temperature NA Biological Tissue Is Frozen: Yes No

Date and Initials of person examining contents: 7/22/11 RWH

Temp should be above freezing to 6°C

Comments:

Chain of Custody Present:	☑Yes ☐No ☐N/A	1.	
Chain of Custody Filled Out:	☑Yes ☐No ☐N/A	2.	
Chain of Custody Relinquished:	☑Yes ☐No ☐N/A	3.	
Sampler Name & Signature on COC:	☑Yes ☐No ☐N/A	4.	
Samples Arrived within Hold Time:	☑Yes ☐No ☐N/A	5.	
Short Hold Time Analysis (<72hr):	☐Yes ☑No ☐N/A	6.	
Rush Turn Around Time Requested:	☐Yes ☑No ☐N/A	7.	
Sufficient Volume:	☑Yes ☐No ☐N/A	8.	
Correct Containers Used:	☑Yes ☐No ☐N/A	9.	
-Pace Containers Used:	☐Yes ☑No ☐N/A		
Containers Intact:	☑Yes ☐No ☐N/A	10.	
Filtered volume received for Dissolved tests	☐Yes ☐No ☑N/A	11.	
Sample Labels match COC:	☑Yes ☐No ☐N/A	12.	
-Includes date/time/ID/Analysis Matrix: WT			
All containers needing preservation have been checked.	☑Yes ☐No ☐N/A	13. 27 mL's HNO_3 1313 7/22/11 RWH	
All containers needing preservation are found to be in compliance with EPA recommendation.	☐Yes ☑No ☐N/A		
exceptions: VOA, coliform, TOC, O&G, WI-DRO (water)	☐Yes ☑No	Initial when completed RWH	Lot # of added preservative RH10117 4
Samples checked for dechlorination:	☐Yes ☐No ☑N/A	14.	
Headspace in VOA Vials (>6mm):	☐Yes ☐No ☑N/A	15.	
Trip Blank Present:	☐Yes ☐No ☑N/A	16.	
Trip Blank Custody Seals Present	☐Yes ☐No ☑N/A		
Pace Trip Blank Lot # (if purchased):			

Client Notification/ Resolution: Field Data Required? Y / N

Person Contacted: _____ Date/Time: _____

Comments/ Resolution: _____

Project Manager Review: [signature] **Date:** 7/25/11

Note: Whenever there is a discrepancy affecting North Carolina compliance samples, a copy of this form will be sent to the North Carolina DEHNR Certification Office (i.e out of hold, incorrect preservative, out of temp, incorrect containers)

F-ALLC003-4 23Feb2010

Primary Laboratories, Inc.

7423 Lee Davis Road • Mechanicsville, VA 23111 • Telephone (804) 559-9004 • Fax (804) 559-9306

ANALYTICAL LABORATORY REPORT

3-Aug-11

Dominion Virginia Power
Attn: Glenn Bishop
4111 Castlewood Road
Richmond, Va. 23234

Date Received: 19-Jul-11
Date Sampled: 19-Jul-11
Work Order No: 1107149-01
Client ID: **North Anna PS- Outfall 009**

Test Description	Final Result	Reporting Limit	Units of Measure	Method Numbers*	Date Analyzed	Tech. Initials
HERBICIDES						
2,4-D	<0.010	0.010	mg/L	8151 A	1-Aug-11	HV
2,4,5-TP	<0.002	0.002	mg/L	SW-846 8151A	1-Aug-11	HV

Date Sampled: 19-Jul-11
Work Order No: 1107149-01
Client ID: **North Anna PS- Outfall 009**

Test Description	Final Result	Reporting Limit	Units of Measure	Method Numbers*	Date Analyzed	Tech. Initials
Organophosphorus Pesticides						
Demeton	<1	1	ug/L	622	27-Jul-11	SC**
Malathion	<1	1	ug/L	622	27-Jul-11	SC**
Chlorpyrifos	<0.2	0.2	ug/L	622	27-Jul-11	SC**
Parathion	<1	1	ug/L	622	27-Jul-11	SC**
Guthion	<1	1	ug/L	622	27-Jul-11	SC**
Diazinon	<1	1	ug/L	622	27-Jul-11	SC**

** Analysis sub-contracted to Reed & Associates

Primary Laboratories, Inc.
Results

3-Aug-11

Date Sampled: 19-Jul-11
Work Order No: 1107149-01
Client ID: **North Anna PS- Outfall 009**

Test Description	Final Result	Reporting Limit	Units of Measure	Method Numbers*	Date Analyzed	Tech. Initials
Pesticides						
Aldrin	<0.05	0.05	ug/L	EPA 608	3-Aug-11	HV
Chlordane	<0.20	0.20	ug/L	EPA 608	3-Aug-11	HV
Dieldrin	<0.10	0.10	ug/L	EPA 608	3-Aug-11	HV
4,4-DDT	<0.10	0.10	ug/L	EPA 608	3-Aug-11	HV
4,4-DDE	<0.10	0.10	ug/L	EPA 608	3-Aug-11	HV
4,4-DDD	<0.10	0.10	ug/L	EPA 608	3-Aug-11	HV
Endosulfan sulfate	<0.10	0.10	ug/L	EPA 608	3-Aug-11	HV
Endosulfan I	<0.10	0.10	ug/L	EPA 608	3-Aug-11	HV
Endosulfan II	<0.10	0.10	ug/L	EPA 608	3-Aug-11	HV
Endrin	<0.10	0.10	ug/L	EPA 608	3-Aug-11	HV
Alpha-BHC	<0.10	0.10	ug/L	EPA 608	3-Aug-11	HV
Beta-BHC	<0.10	0.10	ug/L	EPA 608	3-Aug-11	HV
Delta-BHC	<0.10	0.10	ug/L	EPA 608	3-Aug-11	HV
Gamma-BHC (Lindane)	<0.10	0.10	ug/L	EPA 608	3-Aug-11	HV
Heptachlor	<0.05	0.05	ug/L	EPA 608	3-Aug-11	HV
Endrin Aldehyde	<0.10	0.10	ug/L	EPA 608	3-Aug-11	HV
Heptachlor Epoxide	<0.10	0.10	ug/L	EPA 608	3-Aug-11	HV
Kepone	<0.10	0.10	ug/L	EPA 608	3-Aug-11	HV
Methoxychlor	<0.10	0.10	ug/L	EPA 608	3-Aug-11	HV
Mirex	<0.10	0.10	ug/L	EPA 608	3-Aug-11	HV
PCB-1016	<1.0	1.0	ug/L	EPA 608	3-Aug-11	HV
PCB-1221	<1.0	1.0	ug/L	EPA 608	3-Aug-11	HV
PCB-1232	<1.0	1.0	ug/L	EPA 608	3-Aug-11	HV
PCB-1242	<1.0	1.0	ug/L	EPA 608	3-Aug-11	HV
PCB-1248	<1.0	1.0	ug/L	EPA 608	3-Aug-11	HV
PCB-1254	<1.0	1.0	ug/L	EPA 608	3-Aug-11	HV
PCB-1260	<1.0	1.0	ug/L	EPA 608	3-Aug-11	HV
Toxaphene	<5.0	5.0	ug/L	EPA 608	3-Aug-11	HV

Primary Laboratories, Inc.
Results

3-Aug-11

Date Sampled: 19-Jul-11
Work Order No: 1107149-01
Client ID: **North Anna PS- Outfall 009**

Test Description	Final Result	Reporting Limit	Units of Measure	Method Numbers*	Date Analyzed	Tech. Initials
Cyanide	<0.01	0.01	mg/L	4500CN E	21-Jul-11	NA
Free Cyanide	<0.01	0.01	mg/L	4500CN E	21-Jul-11	NA
BOD	<3.0	3.0	mg/L	5210 B	20-Jul-11 at 12:00	NA
Sulfide	0.08	0.05	mg/L	$4500S^{2-}E$	26-Jul-11 at 9:10	NA
Hydrogen Sulfide	<0.05	0.05	mg/L	376.1	1-Aug-11	HV
Nonylphenol	<0.01	0.01	mg/L	8270C	21-Jul-11	HV
Hexavalent Chromium	<0.005	0.005	mg/L	3500	20-Jul-11 at 9:30	NA
Bromide	1.90	0.01	mg/L	Titrimetric	2-Aug-11	PB
Color	12.0	5.0	PCU	2120 B	21-Jul-11 at 9:00	NA
MBAS	<0.01	0.01	mg/L	5540C	21-Jul-11	HV
Metals						
Chromium	<0.02	0.02	mg/L	3120 B	28-Jul-11	HV

* All methods are Standard Methods 18th Edition unless otherwise noted.

Signature: Parry L. Bragg
Laboratory Manager

Date: 8/3/11

These analytical results are based upon materials provided by the client and are intended for the exclusive use of the client. These analytical results represent the best judgement of Primary Laboratories, Inc. Primary Laboratories, Inc. assumes no responsibility, express or implied, as to the interpretation of the analytical results contained in this report. This report is not to be reproduced except with the written approval of Primary Laboratories, Inc.

Location: North Anna PS	Requested by:	Priority:
Required Date: 30 days	Phone:	Date Analysis Complete:
Comment:	Sampled by:	Date Approved Released:

Bottle Types: Cn=Cyanide, FC=Fecals, EC = E coli, H_2S = Hydrogen sulfide, Asb = Asbestos, BOD=Biological Oxygen Demand
P/P=Pesticide / PCBs, TBT = Tributyltin, R = Radioactivity, Br = Bromide, Color, Sul = sulfide, Sur = Surfactants, DS = Dioxin screen

Preservatives: HCl=Hydrochloric acid, CS=Cu Sulfate, S=Sulfuric acid, N=Nitric acid, ZA=Zinc acetate, SH=Sodium Hydroxide

Tests Required 1= Cn, Free Cn, H_2S, BOD, Pest / PCBs, *Nonylphenol*, {1,2,~~Diphenylhydrazine~~}
2 = *Cr3, Cr6*
3= [Br, Color], Sulfide, Surfactants

1107149

X - PLACE AN "X" IN THE BOX FOR SAMPLES TO BE SUBMITTED

System Lab Number	x	Sample ID	Sample Date	Sample Time	Comp	Grab	Cl_2 Screen [Cn]	Dechlor confirmed?	Sulfide Screen [Cn]	Cn + Free Cn	FC	EC	H_2S	Asb	BOD	P/P	TBT	Nonylphenol	1,2,Diphenylhydrazine	Cr3, Cr6	Br, Color	Sul	Sur	DS	Test Required	Notes
Preservative										SH			ZA,SH									ZA,SH				
		Outfall North Anna 009	7/19/11	1000		X	Pos / Neg	Yes / No	Pos / Neg	1		1	2		1	4		1		2	1	1	1		1,2,3	Do Pest / PCBs per attached list ~~For 1,2 Diphenylhydrazine, use Method 526 at QL = 0.1 ppb~~

Relinquished by: (Signature)	Date 7/19/11 Time 1750	Received by: (Signature)	Date Time
Relinquished by: (Signature)	Date Time	Received by: (Signature)	Date 7-19-11 Time 17:30

Primary Laboratories
7423 Lee Davis Road
Mechanicsville, VA 23111
804-559-9004

5.4°C

coc CPM NA 009.xlsx

DOMINION LABORATORY SERVICES

REPORT PRODUCED ON 09/15/2011

CERTIFICATE OF ANALYSIS TEST RESULTS BY SAMPLE

Location: NORTH ANNA

Submitter: GLENN BISHOP

System Laboratory Number: 391005
Description :OUTFALL 009

Sample Date: 07/19/2011

Parameter		Result	Method	Test Code	Analyst	Date Analyzed	Time Analyzed
Ammonia as N, PPM		0.03	SM18TH 4500NH3F	NH3	DAWNE01	07/28/2011	1642
Boron as B, PPM		0.02	SM18TH 4500-B B	B	DONNA13	08/03/2011	1100
COD, PPM		7.65	HACH 8000	COD	DONNA13	08/02/2011	1030
Fluoride as F, PPM		0.096	EPA 300	FIC	DAWNE01	08/04/2011	2056
NO3+NO2, PPM	<	0.01	EPA 353.2	NO3NO2	DAWNE01	07/21/2011	909
Oil and Grease, PPM	<	5.00	EPA 1664A	O&G	TANYA19	07/22/2011	930
Phenol, PPM		0.07	EPA 420.1	PHENOL	TANYA19	08/12/2011	1252
Sulfate as SO4, PPM		8.66	EPA 300	SO4IC	DAWNE01	08/04/2011	2056
TK Nitrogen as N,PPM		0.30	EPA 351.2	TKN	DONNA13	08/11/2011	1045
TOC, PPM		6.4	SM18TH 5310B	TOC	DONNA13	08/03/2011	1302
Total Phos. as P,PPM	<	0.05	SM18TH 4500-P	TP	TANYA19	08/11/2011	1325
Aluminum as Al, PPM		0.26	SM18TH 3111D	AL	DAWNE01	08/24/2011	1151
Antimony as Sb, ppb	<	1.	SM18TH 3113B	SBPPB	STEVE72	08/01/2011	951
Arsenic as As, ppb	<	3.	SM18TH 3113B	ASPPB	STEVE72	08/01/2011	844
Barium as Ba, ppb		47.	SM18TH 3113B	BAPPB	STEVE72	09/08/2011	1314
Beryllium as Be, ppb	<	0.2	SM18TH 3113B	BEPPB	STEVE72	09/13/2011	604
Cadmium as Cd, ppb	<	0.3	SM18TH 3113B	CDPPB	STEVE72	09/13/2011	1109
Chromium as Cr, ppb	<	1.	SM18TH 3113B	CRPPB	STEVE72	09/13/2011	1226
Cobalt as Co, ppb	<	0.6	SM18TH 3113B	COPPB	STEVE72	09/13/2011	618
Copper as Cu, ppb		1.	SM18TH 3113B	CUPPB	STEVE72	08/01/2011	1627
Iron as Fe, PPM		0.14	SM18TH 3111B	FE	DAWNE01	08/12/2011	957
Lead as Pb, ppb	<	1.	SM18TH 3113B	PBPPB	STEVE72	08/01/2011	1758
Magnesium as Mg, PPM		4.90	SM18TH 3111B	MG	DAWNE01	08/16/2011	1609
Manganese as Mn, PPM		0.11	SM18TH 3111B	MN	DAWNE01	08/12/2011	1046
Mercury as Hg, ppb	<	0.2	SM18TH 3112B	HGPPB	STEVE72	07/27/2011	743
Molybdenum as Mo,ppb		15.	SM18TH 3113B	MOPPB	STEVE72	09/09/2011	903
Nickel as Ni, ppb	<	5.	SM18TH 3113B	NIPPB	STEVE72	08/01/2011	1931
Selenium as Se, ppb	<	3.	SM18TH 3113B	SEPPB	STEVE72	08/01/2011	1030
Silver as Ag, ppb	<	0.1	SM18TH 3113B	AGPPB	STEVE72	09/09/2011	1034
Thallium as Tl, ppb	<	0.2	EPA 279.2	TLPPB	STEVE72	08/01/2011	1345
Tin as Sn, ppb	<	5.	SM18TH 3113B	SNPPB	STEVE72	09/06/2011	1006
Titanium as Ti, ppb	<	2.	EPA 283.2	TIPPB	STEVE72	09/13/2011	834
Zinc as Zn, PPM	<	0.010	SM18TH 3111B	ZN	DAWNE01	08/12/2011	1132
Methyl Chloride, ppb	<	1.10	EPA 624	VOA624	CHAR130	07/26/2011	1509
Methyl Bromide, ppb	<	1.40	EPA 624	VOA624	CHAR130	07/26/2011	1509
Vinyl Chloride, ppb	<	1.80	EPA 624	VOA624	CHAR130	07/26/2011	1509
Chloroethane, ppb	<	1.10	EPA 624	VOA624	CHAR130	07/26/2011	1509

DOMINION LABORATORY SERVICES

REPORT PRODUCED ON 09/15/2011

CERTIFICATE OF ANALYSIS TEST RESULTS BY SAMPLE

Location: NORTH ANNA

Submitter: GLENN BISHOP

System Laboratory Number: 391005

Sample Date: 07/19/2011

Description :OUTFALL 009

Parameter	Result	Method	Test Code	Analyst	Date Analyzed	Time Analyzed
Methylene Chloride, ppb	< 2.80	EPA 624	VOA624	CHAR130	07/26/2011	1509
Acrolein, ppb	< 10.00	EPA 624	VOA624	CHAR130	07/26/2011	1509
Acrylonitrile, ppb	< 1.50	EPA 624	VOA624	CHAR130	07/26/2011	1509
Trichlorofluoromethane, ppb	< 2.30	EPA 624	VOA624	CHAR130	07/26/2011	1509
1,1-Dichloroethylene, ppb	< 2.80	EPA 624	VOA624	CHAR130	07/26/2011	1509
1,1-Dichloroethane, ppb	< 4.70	EPA 624	VOA624	CHAR130	07/26/2011	1509
1,2-Trans-Dichloroethylene, ppb	< 1.60	EPA 624	VOA624	CHAR130	07/26/2011	1509
Chloroform, ppb	< 1.60	EPA 624	VOA624	CHAR130	07/26/2011	1509
1,2-Dichloroethane, ppb	< 2.80	EPA 624	VOA624	CHAR130	07/26/2011	1509
1,1,1-Trichloroethane, ppb	< 3.80	EPA 624	VOA624	CHAR130	07/26/2011	1509
Carbon Tetrachloride, ppb	< 2.80	EPA 624	VOA624	CHAR130	07/26/2011	1509
Dichlorobromomethane, ppb	< 2.20	EPA 624	VOA624	CHAR130	07/26/2011	1509
1,2-Dichloropropane, ppb	< 6.00	EPA 624	VOA624	CHAR130	07/26/2011	1509
Cis-1 3-Dichloropropylene, ppb	< 5.00	EPA 624	VOA624	CHAR130	07/26/2011	1509
Trans-1 3-Dichloropropylene, ppb	< 0.90	EPA 624	VOA624	CHAR130	07/26/2011	1509
Trichloroethylene, ppb	< 1.90	EPA 624	VOA624	CHAR130	07/26/2011	1509
Chlorodibromomethane, ppb	< 3.10	EPA 624	VOA624	CHAR130	07/26/2011	1509
Benzene, ppb	< 4.40	EPA 624	VOA624	CHAR130	07/26/2011	1509
1,1,2-Trichloroethane, ppb	< 5.00	EPA 624	VOA624	CHAR130	07/26/2011	1509
2-Chloroethylvinyl Ether, ppb	< 1.20	EPA 624	VOA624	CHAR130	07/26/2011	1509
Bromoform, ppb	< 4.70	EPA 624	VOA624	CHAR130	07/26/2011	1 509
1,1,2,2-Tetrachloroethane, ppb	< 6.90	EPA 624	VOA624	CHAR130	07/26/2011	1509
Tetrachloroethylene, ppb	< 4.10	EPA 624	VOA624	CHAR130	07/26/2011	1509
Toluene, ppb	< 6.00	EPA 624	VOA624	CHAR130	07/26/2011	1509
Chlorobenzene, ppb	< 6.00	EPA 624	VOA624	CHAR130	07/26/2011	1509
Ethylbenzene, ppb	< 7.20	EPA 624	VOA624	CHAR130	07/26/2011	1509
1,3 Dichlorobenzene, ppb	< 5.00	EPA 624	VOA624	CHAR130	07/26/2011	1509
1,4 Dichlorobenzene, ppb	< 5.00	EPA 624	VOA624	CHAR130	07/26/2011	1509
1,2 Dichlorobenzene, ppb	< 5.00	EPA 624	VOA624	CHAR130	07/26/2011	1509
Phenol, ppb	< 2.70	EPA 625	ACID625	CHAR130	08/08/2011	2352
2-Chlorophenol, ppb	< 3.30	EPA 625	ACID625	CHAR130	08/08/2011	2352
2-Nitrophenol, ppb	< 3.60	EPA 625	ACID625	CHAR130	08/08/2011	2352
2,4-Dimethylphenol, ppb	< 5.20	EPA 625	ACID625	CHAR130	08/08/2011	2352
2,4-Dichlorophenol, ppb	< 5.60	EPA 625	ACID625	CHAR130	08/08/2011	2352
4-Chloro-3-Methylphenol, ppb	< 7.50	EPA 625	ACID625	CHAR130	08/08/2011	2352
2,4,6-Trichlorophenol, ppb	< 2.70	EPA 625	ACID625	CHAR130	08/08/2011	2352
2,4-Dinitrophenol, ppb	< 42.00	EPA 625	ACID625	CHAR130	08/08/2011	2352

DOMINION LABORATORY SERVICES

REPORT PRODUCED ON 09/15/2011

CERTIFICATE OF ANALYSIS TEST RESULTS BY SAMPLE

Location: NORTH ANNA

Submitter: GLENN BISHOP

System Laboratory Number: 391005
Description :OUTFALL 009

Sample Date: 07/19/2011

Parameter	Result	Method	Test Code	Analyst	Date Analyzed	Time Analyzed
4-Nitrophenol, ppb	< 2.40	EPA 625	ACID625	CHAR130	08/08/2011	2352
2-Methyl-4,6-Dinitrophenol, ppb	< 24.00	EPA 625	ACID625	CHAR130	08/08/2011	2352
Pentachlorophenol, ppb	< 3.60	EPA 625	ACID625	CHAR130	08/08/2011	2352
Dis. Tl, ppb	< 0.2	EPA 279.2	TLDISPPB	STEVE72	08/01/2011	1345
Dis. Ti, ppb	< 2.	EPA 283.2	TIDISPPB	STEVE72	09/13/2011	834
Dis. Sn, ppb	< 5.	SM18TH 3113B	SNDISPPB	STEVE72	09/06/2011	1006
Dis. Se, ppb	< 3.	SM18TH 3113B	SEDISPPB	STEVE72	08/01/2011	1030
Dis. Sb, ppb	< 1.	SM18TH 3113B	SBDISPPB	STEVE72	08/01/2011	951
Dis. Pb, ppb	< 1.	SM18TH 3113B	PBDISPPB	STEVE72	08/01/2011	1758
Dis. Ni, ppb	< 5.	SM18TH 3113B	NIDISPPB	STEVE72	08/01/2011	1931
Dis. Mo, ppb	16.	SM18TH 3113B	MODISPPB	STEVE72	09/09/2011	903
Dis. Hg, ppb	< 0.2	SM18TH 3112B	HGDISPPB	STEVE72	07/27/2011	743
Dis. Cu, ppb	< 1.	SM18TH 3113B	CUDISPPB	STEVE72	08/01/2011	1627
Dis. Cr, ppb	< 1.	SM18TH 3113B	CRDISPPB	STEVE72	09/13/2011	1226
Dis. Co, ppb	< 0.6	SM18TH 3113B	CODISPPB	STEVE72	09/13/2011	618
Dis. Cd, ppb	< 0.3	SM18TH 3113B	CDDISPPB	STEVE72	09/13/2011	1109
Dis. Be, ppb	< 0.2	SM18TH 3113B	BEDISPPB	STEVE72	09/13/2011	604
Dis. Ba, ppb	45.	SM18TH 3113B	BADISPPB	STEVE72	09/08/2011	1314
Dis. As, ppb	< 3.	SM18TH 3113B	ASDISPPB	STEVE72	08/01/2011	844
Dis. Ag, ppb	< 0.1	SM18TH 3113B	AGDISPPB	STEVE72	09/09/2011	1034
Dis. Zn, PPM	< 0.010	SM18TH 3111B	ZNDIS	DAWNE01	08/12/2011	1132
Dis. Mn, PPM	0.06	SM18TH 3111B	MNDIS	DAWNE01	08/12/2011	1046
Dis. Mg, PPM	4.86	SM18TH 3111B	MGDIS	DAWNE01	08/16/2011	1609
Dis. Fe, PPM	< 0.05	SM18TH 3111B	FEDIS	DAWNE01	08/12/2011	957
Dis. Al, PPM	0.26	SM18TH 3111D	ALDIS	DAWNE01	08/24/2011	1151
T-Dis. Solids, PPM	128.5	SM18TH 2540C	TDS	TANYA19	07/21/2011	1400
Nitrate as N, PPM	< 0.01	EPA 353.2	NO3	DAWNE01	07/21/2011	909
Chloride as Cl, PPM	26.33	EPA 300	CLIC	DAWNE01	08/04/2011	2056
T-Hard. as CaCO3,PPM	44.46	SM18TH 2340C	HARD	TANYA19	07/26/2011	930
2,4-D, ppb	< 10.00	EPA 615	8151GC	HERBE31	08/01/2011	
Silvex, ppb	< 2.00	EPA 615	8151GC	HERBE31	08/01/2011	
Chlorpyrifos, ppb	< 0.2000	EPA 622	ORGPHOS	HERBE31	07/27/2011	
Demeton, ppb	< 1.0000	EPA 622	ORGPHOS	HERBE31	07/27/2011	
Diazinon, ppb	< 1.0000	EPA 622	ORGPHOS	HERBE31	07/27/2011	
Guthion, ppb	< 1.0000	EPA 622	ORGPHOS	HERBE31	07/27/2011	
Malathion, ppb	< 1.0000	EPA 622	ORGPHOS	HERBE31	07/27/2011	
Parathion, ppb	< 1.0000	EPA 622	ORGPHOS	HERBE31	07/27/2011	

DOMINION LABORATORY SERVICES

REPORT PRODUCED ON 09/15/2011

CERTIFICATE OF ANALYSIS TEST RESULTS BY SAMPLE

Location: NORTH ANNA

Submitter: GLENN BISHOP

System Laboratory Number: 391005

Sample Date: 07/19/2011

Description :OUTFALL 009

Parameter	Result	Method	Test Code	Analyst	Date Analyzed	Time Analyzed
Aldrin, ppb	< 0.050	EPA 608	608GC	HERBE31	08/03/2011	
Chlordane, ppb	< 0.200	EPA 608	608GC	HERBE31	08/03/2011	
Dieldrin, ppb	< 0.100	EPA 608	608GC	HERBE31	08/03/2011	
4,4-DDT, ppb	< 0.100	EPA 608	608GC	HERBE31	08/03/2011	
4,4-DDE, ppb	< 0.100	EPA 608	608GC	HERBE31	08/03/2011	
4,4-DDD, ppb	< 0.100	EPA 608	608GC	HERBE31	08/03/2011	
Endosulfan Sulfate, ppb	< 0.100	EPA 608	608GC	HERBE31	08/03/2011	
Endosulfan I, ppb	< 0.100	EPA 608	608GC	HERBE31	08/03/2011	
Endosulfan II, ppb	< 0.100	EPA 608	608GC	HERBE31	08/03/2011	
Endrin, ppb	< 0.100	EPA 608	608GC	HERBE31	08/03/2011	
Alpha-BHC, ppb	< 0.100	EPA 608	608GC	HERBE31	08/03/2011	
Beta-BHC, ppb	< 0.100	EPA 608	608GC	HERBE31	08/03/2011	
Delta-BHC, ppb	< 0.100	EPA 608	608GC	HERBE31	08/03/2011	
Gamma-BHC (Lindane), ppb	< 0.100	EPA 608	608GC	HERBE31	08/03/2011	
Heptachlor, ppb	< 0.050	EPA 608	608GC	HERBE31	08/03/2011	
Kepone, ppb	< 0.100	EPA 608	608GC	HERBE31	08/03/2011	
Methoxychlor, ppb	< 0.100	EPA 608	608GC	HERBE31	08/03/2011	
Mirex, ppb	< 0.100	EPA 608	608GC	HERBE31	08/03/2011	
Endrin Aldehyde, ppb	< 0.100	EPA 608	608GC	HERBE31	08/03/2011	
Heptachlor Epoxide, ppb	< 0.100	EPA 608	608GC	HERBE31	08/03/2011	
Toxaphene, ppb	< 5.000	EPA 608	608GC	HERBE31	08/03/2011	
Arochlor 1016, ppb	< 1.0	EPA 608	608PCB	HERBE31	08/03/2011	
Arochlor 1221, ppb	< 1.0	EPA 608	608PCB	HERBE31	08/03/2011	
Arochlor 1232, ppb	< 1.0	EPA 608	608PCB	HERBE31	08/03/2011	
Arochlor 1242, ppb	< 1.0	EPA 608	608PCB	HERBE31	08/03/2011	
Arochlor 1248, ppb	< 1.0	EPA 608	608PCB	HERBE31	08/03/2011	
Arochlor 1254, ppb	< 1.0	EPA 608	608PCB	HERBE31	08/03/2011	
Arochlor 1260, ppb	< 1.0	EPA 608	608PCB	HERBE31	08/03/2011	
Cyanide as CN, PPM	< 0.010	SM 4500CN E	CN	HERBE31	07/21/2011	
BOD, PPM	< 3.00	SM 5210 B	BOD	HERBE31	07/20/2011	1200
Sulfide, PPM	0.08	SM18TH 4500S 2 E	SULFID	HERBE31	07/26/2011	910
Hydrogen Sulfide, PPM	< 0.05	EPA 376.1	HYDSULF	HERBE31	08/01/2011	
Nonylphenol, ppb	< 10.0	EPA 8270C	NONYLPNL	HERBE31	07/21/2011	
Chrom. +6 as Cr6,PPM	< 0.005	SM 3500-CR D	CR6	HERBE31	07/20/2011	930
Bromide as Br, PPM	1.90	EPA 320.1	BR	HERBE31	08/20/2011	
Color, PCU	12.0	SM18TH 2120B	CLR	HERBE31	07/21/2011	900
MBAS as LAS, PPM	< 0.010	SM 5540C	SURF	HERBE31	07/21/2011	

DOMINION LABORATORY SERVICES

REPORT PRODUCED ON 09/15/2011

CERTIFICATE OF ANALYSIS TEST RESULTS BY SAMPLE

Location: NORTH ANNA

Submitter: GLENN BISHOP

System Laboratory Number: 391005
Description :OUTFALL 009

Sample Date: 07/19/2011

Parameter	Result	Method	Test Code	Analyst	Date Analyzed	Time Analyzed
Chromium as Cr, PPM	< 0.02	SM18TH 3120B	CR-ICP	HERBE31	07/28/2011	
Gross Alpha, pCi/L	< 1.700	EPA 900.0	RADIO	HERBE31	07/26/2011	1255
Gross Beta, pCi/L	< 2.220	EPA 900.0	RADIO	HERBE31	07/26/2011	1255
N-Nitrosodimethylamine, ppb	< 6.20	EPA 625	BN625	CHAR130	08/08/2011	1509
Bis(-2-Chloroethyl) ether, ppb	< 5.70	EPA 625	BN625	CHAR130	08/08/2011	1509
Bis(2-Chloroisopropyl) ether, ppb	< 5.70	EPA 625	BN625	CHAR130	08/08/2011	1509
N-nitroso-Di-n-propylamine, ppb	< 3.60	EPA 625	BN625	CHAR130	08/08/2011	1509
Hexachloroethane, ppb	< 2.40	EPA 625	BN625	CHAR130	08/08/2011	1509
Nitrobenzene, ppb	< 4.20	EPA 625	BN625	CHAR130	08/08/2011	1509
Isophorone, ppb	< 5.10	EPA 625	BN625	CHAR130	08/08/2011	1509
Bis(-2-Chloroethoxy) Methane, ppb	< 5.30	EPA 625	BN625	CHAR130	08/08/2011	1509
1,2,4-Trichlorobenzene, ppb	< 7.90	EPA 625	BN625	CHAR130	08/08/2011	1509
Naphthalene, ppb	< 3.80	EPA 625	BN625	CHAR130	08/08/2011	1509
Hexachlorobutadiene, ppb	< 1.80	EPA 625	BN625	CHAR130	08/08/2011	1509
Hexachlorocyclopentadiene, ppb	< 10.00	EPA 625	BN625	CHAR130	08/08/2011	1509
2-Chloronaphthalene, ppb	< 4.60	EPA 625	BN625	CHAR130	08/08/2011	1509
Dimethyl Phthalate, ppb	< 7.50	EPA 625	BN625	CHAR130	08/08/2011	1509
Acenaphthylene, ppb	< 3.50	EPA 625	BN625	CHAR130	08/08/2011	1509
2,6-Dinitrotoluene, ppb	< 3.40	EPA 625	BN625	CHAR130	08/08/2011	1509
Acenaphthene, ppb	< 3.00	EPA 625	BN625	CHAR130	08/08/2011	1509
2,4-Dinitrotoluene, ppb	< 5.70	EPA 625	BN625	CHAR130	08/08/2011	1509
Diethylphthalate, ppb	< 7.40	EPA 625	BN625	CHAR130	08/08/2011	1509
Fluorene, ppb	< 2.20	EPA 625	BN625	CHAR130	08/08/2011	1509
4-Chlorophenyl-phenylether, ppb	< 4.20	EPA 625	BN625	CHAR130	08/08/2011	1509
N-nitrosodiphenylamine, ppb	< 2.70	EPA 625	BN625	CHAR130	08/08/2011	1509
1,2-Diphenylhydrazine, ppb	< 8.80	EPA 625	BN625	CHAR130	08/08/2011	1509
4-Bromophenyl-phenylether, ppb	< 3.00	EPA 625	BN625	CHAR130	08/08/2011	1509
Hexachlorobenzene, ppb	< 3.10	EPA 625	BN625	CHAR130	08/08/2011	1509
Phenanthrene, ppb	< 5.40	EPA 625	BN625	CHAR130	08/08/2011	1509
Anthracene, ppb	< 1.90	EPA 625	BN625	CHAR130	08/08/2011	1509
Di-n-Butylphthalate, ppb	< 6.40	EPA 625	BN625	CHAR130	08/08/2011	1509
Fluoranthene, ppb	< 2.20	EPA 625	BN625	CHAR130	08/08/2011	1509
Benzidine, ppb	< 63.00	EPA 625	BN625	CHAR130	08/08/2011	1509
Pyrene, ppb	< 3.80	EPA 625	BN625	CHAR130	08/08/2011	1509
Butylbenzylphthalate, ppb	< 2.50	EPA 625	BN625	CHAR130	08/08/2011	1509
Chrysene, ppb	< 2.50	EPA 625	BN625	CHAR130	08/08/2011	1509
3,3'-Dichlorobenzidine, ppb	< 16.50	EPA 625	BN625	CHAR130	08/08/2011	1509

DOMINION LABORATORY SERVICES

REPORT PRODUCED ON 09/15/2011

CERTIFICATE OF ANALYSIS TEST RESULTS BY SAMPLE

Location: NORTH ANNA

Submitter: GLENN BISHOP

System Laboratory Number: 391005

Sample Date: 07/19/2011

Description :OUTFALL 009

Parameter	Result	Method	Test Code	Analyst	Date Analyzed	Time Analyzed
Benzo (a) Anthracene, ppb	< 7.80	EPA 625	BN625	CHAR130	08/08/2011	1509
Bis(2-ethylhexyl) Phthalate, ppb	< 2.50	EPA 625	BN625	CHAR130	08/08/2011	1509
Di-n-octyl Phthalate, ppb	< 2.50	EPA 625	BN625	CHAR130	08/08/2011	1509
Benzo (b) fluoranthene, ppb	< 4.80	EPA 625	BN625	CHAR130	08/08/2011	1509
Benzo (k) fluoranthene, ppb	< 2.50	EPA 625	BN625	CHAR130	08/08/2011	1509
Benzo (a) pyrene, ppb	< 2.50	EPA 625	BN625	CHAR130	08/08/2011	1509
Indeno (1 2 3-cd) pyrene, ppb	< 3.70	EPA 625	BN625	CHAR130	08/08/2011	1509
Dibenzo (a h) anthracene, ppb	< 2.50	EPA 625	BN625	CHAR130	08/08/2011	1509
Benzo (g h i) perylene, ppb	< 4.10	EPA 625	BN625	CHAR130	08/08/2011	1509

WO# 418571

Location:	North Anna PS	Requested by:	Glenn Bishop	Priority:	9
Required Date: 60 days	9/16/11	Phone:		Date Analysis Complete:	8-13-11
Comment:		Sampled by:	WGB	Date Approved Released:	8-15-11

Bottle Types: O/G=Oil and Grease, PT=Phenols Total, V=Volatiles, M=Metals, A=[Ammonia,TKN,TP,COD,NO_3/NO_2], BOD=Biological Oxygen Demand
TOC=Total Organic Carbon, TSS=[Total Suspended Solids,B,F,NO_3/NO_2,SO_4,TDS,Chloride]
ABN=Acid Base Neutrals, PP=Pesticide/PCBs

Preservatives: HCl=Hydrochloric acid, CS=Cu Sulfate, S=Sulfuric acid, N=Nitric acid, ZA=Zinc acetate, SH=Sodium Hydroxide

Consider:
Flow
Temp (W+S)

TRC

Tests Required 1= O/G, Phenol total, Volatiles, [Ammonia, TKN, TP, COD, NO_3/NO_2], TOC
2= [TDS, B, F, NO_3/NO_2, Nitrate N, Chlorides, SO_4]
3= ABN
4= TR and Diss Metals Al,Ba,Co,Fe,Mg,Mo,Mn,Sn,Ti,Sb,As,Be,Cd,Cr,Cu,Pb,Hg,Ni,Se,Ag,Tl,Zn + Hardness

NOTE:

X - PLACE AN "X" IN THE BOX FOR SAMPLES TO BE SUBMITTED

System Lab Number	x	Sample ID	Sample Date	Sample Time	Comp	Grab	Cl_2 Screen [ABN,Vol]	Dechlor confirmed?	Regent code			O/G	PT	V	M	A	BOD				TOC	TSS	ABN	P/P		Test Required	Notes
Preservative												HCl	CS,S	HCl	N	S					HCl						
391005	X	Outfall 009	7/19/11	1000		X	Pos / Neg	Yes / No	Cons1			1	1	6	2	1					1	1	3			1,2,3,4	Temp = 30.6 TRC = <0.1

Relinquished by: (Signature)	WHB	Date 7/20/11	Time 0810	Received by: (Signature)	Date 7/20/11 Time 0810
Relinquished by: (Signature)		Date	Time	Received by: (Signature)	Date Time

Dominion Resources
Laboratory Services
11202 Old Stage Road
Chester, VA 23836

Dominion Laboratory Login Checklist

Station/Study: NA		WO#: 48571	
Thermometer Used: 61951674 or 61951693		Temp: 6.3°C	
	Type of Ice: Wet Blue None		
Chain of Custody Present	Yes	No	N/A
Chain of Custody Filled Out	Yes	No	N/A
Chain of Custody Relinquished	Yes	No	N/A
Sampler Name on COC	Yes	No	N/A
Samples Labels match COC	Yes	No	N/A
Includes date/time/ID/Analysis	Yes	No	N/A
All entries in Ink	Yes	No	N/A
Samples Arrived within Holding Time	Yes	No	N/A
Short Hold Time Analysis (<72hr)	Yes	No	N/A
Rush Turn Around Time Requested	Yes	No	N/A
Sufficient Volume	Yes	No	N/A
Correct Containers Used	Yes	No	N/A
Containers Used: (circle)	NH3	Solids	O&G
	TOC	OPO4	ABN
	IC	DRO	Phenol
	Hardness	Radioactivity	Volatiles
	Grain Size	Metals (Total or Dissolved)	
	Other:		
# of Bottles on COC correct	Yes	No	N/A
Filtered Volume received for Dissolved Tests	Yes	No	N/A
Custody Seal Intact	Yes	No	N/A
Date/Time Received: 7/20/11 @810			
Received by: TMZ			
Due Date on COC match worksheet	Yes	No	N/A
Tests Required on COC match worksheet	Yes	No	N/A
Verified by: [signature]		Date: 7/20/11	

Pace Analytical®
www.pacelabs.com

Pace Analytical Services, Inc.
1638 Roseytown Road - Suites 2,3,4
Greensburg, PA 15601
(724)850-5600

July 31, 2011

Mr. Glenn Bishop
Dominion Environmental Biology
4111 Castlewood Road
Richmond, VA 23234

RE: Project: North Anna Intake
Pace Project No.: 3050679

Dear Mr. Bishop:
Enclosed are the analytical results for sample(s) received by the laboratory on July 22, 2011. The results relate only to the samples included in this report. Results reported herein conform to the most current TNI standards, where applicable, unless otherwise narrated in the body of the report.

If you have any questions concerning this report, please feel free to contact me.

Sincerely,

Jacquelyn Collins

jacquelyn.collins@pacelabs.com
Project Manager

Enclosures

Pace Analytical Services, Inc.
1638 Roseytown Road - Suites 2,3,4
Greensburg, PA 15601
(724)850-5600

CERTIFICATIONS

Project: North Anna Intake
Pace Project No.: 3050679

Pennsylvania Certification IDs
1638 Roseytown Road Suites 2,3&4, Greensburg, PA 15601
Alabama Certification #: 41590
Arizona Certification #: AZ0734
Arkansas Certification
California/NELAC Certification #: 04222CA
Colorado Certification
Connecticut Certification #: PH 0694
Delaware Certification
Florida/NELAC Certification #: E87683
Guam/PADEP Certification
Hawaii/PADEP Certification
Idaho Certification
Illinois/PADEP Certification
Indiana/PADEP Certification
Iowa Certification #: 391
Kansas/NELAC Certification #: E-10358
Kentucky Certification #: 90133
Louisiana/NELAC Certification #: LA080002
Louisiana/NELAC Certification #: 4086
Maine Certification #: PA0091
Maryland Certification #: 308
Massachusetts Certification #: M-PA1457
Michigan/PADEP Certification
Missouri Certification #: 235
Montana Certification #: Cert 0082
Nevada Certification
New Hampshire/NELAC Certification #: 2976
New Jersey/NELAC Certification #: PA 051
New Mexico Certification
New York/NELAC Certification #: 10888
North Carolina Certification #: 42706
Oregon/NELAC Certification #: PA200002
Pennsylvania/NELAC Certification #: 65-00282
Puerto Rico Certification #: PA01457
South Dakota Certification
Tennessee Certification #: TN2867
Texas/NELAC Certification #: T104704188-09 TX
Utah/NELAC Certification #: ANTE
Virgin Island/PADEP Certification
Virginia Certification #: 00112
Washington Certification #: C1941
West Virginia Certification #: 143
Wisconsin/PADEP Certification
Wyoming Certification #: 8TMS-Q

This report shall not be reproduced, except in full,
without the written consent of Pace Analytical Services, Inc..

Pace Analytical Services, Inc.
1638 Roseytown Road - Suites 2,3,4
Greensburg, PA 15601
(724)850-5600

SAMPLE SUMMARY

Project: North Anna Intake
Pace Project No.: 3050679

Lab ID	Sample ID	Matrix	Date Collected	Date Received
3050679001	**North Anna Intake**	Water	07/19/11 13:00	07/22/11 10:00

This report shall not be reproduced, except in full,
without the written consent of Pace Analytical Services, Inc..

Pace Analytical Services, Inc.
1638 Roseytown Road - Suites 2,3,4
Greensburg, PA 15601
(724)850-5600

SAMPLE ANALYTE COUNT

Project: North Anna Intake
Pace Project No.: 3050679

Lab ID	Sample ID	Method	Analysts	Analytes Reported	Laboratory
3050679001	**North Anna Intake**	EPA 900.0m	JC2	2	PASI-PA

This report shall not be reproduced, except in full,
without the written consent of Pace Analytical Services, Inc..

Pace Analytical Services, Inc.
1638 Roseytown Road - Suites 2,3,4
Greensburg, PA 15601
(724)850-5600

PROJECT NARRATIVE

Project: North Anna Intake
Pace Project No.: 3050679

Method: **EPA 900.0m**
Description: 900.0 Gross Alpha/Beta
Client: Dominion Environmental Biology
Date: July 31, 2011

General Information:
1 sample was analyzed for EPA 900.0m. All samples were received in acceptable condition with any exceptions noted below.

Hold Time:
The samples were analyzed within the method required hold times with any exceptions noted below.

Method Blank:
All analytes were below the report limit in the method blank with any exceptions noted below.

Laboratory Control Spike:
All laboratory control spike compounds were within QC limits with any exceptions noted below.

Matrix Spikes:
All percent recoveries and relative percent differences (RPDs) were within acceptance criteria with any exceptions noted below.

Duplicate Sample:
All duplicate sample results were within method acceptance criteria with any exceptions noted below.

Additional Comments:

This data package has been reviewed for quality and completeness and is approved for release.

This report shall not be reproduced, except in full,
without the written consent of Pace Analytical Services, Inc..

Pace Analytical Services, Inc.
1638 Roseytown Road - Suites 2,3,4
Greensburg, PA 15601
(724)850-5600

ANALYTICAL RESULTS

Project: North Anna Intake
Pace Project No.: 3050679

Sample: North Anna Intake **Lab ID: 3050679001** Collected: 07/19/11 13:00 Received: 07/22/11 10:00 Matrix: Water
PWS: Site ID: Sample Type:

Parameters	Method	Act ± Unc (MDC)	Units	Analyzed	CAS No.	Qual
Gross Alpha	EPA 900.0m	**0.293 ± 0.675 (1.61)**	pCi/L	07/26/11 12:55	12587-46-1	
Gross Beta	EPA 900.0m	**2.79 ± 1.35 (2.29)**	pCi/L	07/26/11 12:55	12587-47-2	

This report shall not be reproduced, except in full,
without the written consent of Pace Analytical Services, Inc..

Pace Analytical Services, Inc.
1638 Roseytown Road - Suites 2,3,4
Greensburg, PA 15601
(724)850-5600

QUALITY CONTROL DATA

Project: North Anna Intake
Pace Project No.: 3050679

QC Batch: RADC/9036
QC Batch Method: EPA 900.0m
Analysis Method: EPA 900.0m
Analysis Description: 900.0 Gross Alpha/Beta
Associated Lab Samples: 3050679001

METHOD BLANK: 324319
Matrix: Water
Associated Lab Samples: 3050679001

Parameter	Act ± Unc (MDC)	Units	Analyzed	Qualifiers
Gross Alpha	-0.164 ± 0.796 (2.25)	pCi/L	07/26/11 12:57	
Gross Beta	-0.606 ± 0.796 (2.15)	pCi/L	07/26/11 12:57	

This report shall not be reproduced, except in full,
without the written consent of Pace Analytical Services, Inc..

Pace Analytical Services, Inc.
1638 Roseytown Road - Suites 2,3,4
Greensburg, PA 15601
(724)850-5600

QUALIFIERS

Project: North Anna Intake
Pace Project No.: 3050679

DEFINITIONS

DF - Dilution Factor, if reported, represents the factor applied to the reported data due to changes in sample preparation, dilution of the sample aliquot, or moisture content.

ND - Not Detected at or above adjusted reporting limit.

J - Estimated concentration above the adjusted method detection limit and below the adjusted reporting limit.

MDL - Adjusted Method Detection Limit.

S - Surrogate

1,2-Diphenylhydrazine (8270 listed analyte) decomposes to Azobenzene.

Consistent with EPA guidelines, unrounded data are displayed and have been used to calculate % recovery and RPD values.

LCS(D) - Laboratory Control Sample (Duplicate)

MS(D) - Matrix Spike (Duplicate)

DUP - Sample Duplicate

RPD - Relative Percent Difference

NC - Not Calculable.

SG - Silica Gel - Clean-Up

U - Indicates the compound was analyzed for, but not detected.

N-Nitrosodiphenylamine decomposes and cannot be separated from Diphenylamine using Method 8270. The result reported for each analyte is a combined concentration.

Act - Activity

Unc - Uncertainty

(MDC) - Minimum Detectable Concentration

Pace Analytical is TNI accredited. Contact your Pace PM for the current list of accredited analytes.

LABORATORIES

PASI-PA Pace Analytical Services - Greensburg

This report shall not be reproduced, except in full,
without the written consent of Pace Analytical Services, Inc..

Pace Analytical™
www.pacelabs.com

CHAIN-OF-CUSTODY / Analytical Request Document

The Chain-of-Custody is a LEGAL DOCUMENT. All relevant fields must be completed accurately.

Page: 1 of 1

Section A Required Client Information:

Company:	Dominion Environmental Biology
Address:	4111 Castlewood Road
	Richmond, VA 23234
Email To:	glenn.bishop@dom.com
Phone: 804-350-6918	Fax: 888-342-0629
Requested Due Date/TAT:	Normal

Section B Required Project Information:

Report To:	Glenn Bishop
Copy To:	
Purchase Order No.:	Mastercard
Project Name:	
Project Number:	

Section C Invoice Information:

Attention:	Glenn Bishop
Company Name:	Dominion
Address:	4111 Castlewood Road 23234
Pace Quote Reference:	46012743
Pace Project Manager:	
Pace Profile #:	

REGULATORY AGENCY

☐ NPDES ☐ GROUND WATER ☐ DRINKING WATER
☐ UST ☐ RCRA ☐ OTHER _____

Site Location STATE: VA

Requested Analysis Filtered (Y/N)

Section D Required Client Information

Valid Matrix Codes

MATRIX	CODE
DRINKING WATER	DW
WATER	WT
WASTE WATER	WW
PRODUCT	P
SOIL/SOLID	SL
OIL	OL
WIPE	WP
AIR	AR
OTHER	OT
TISSUE	TS

SAMPLE ID (A-Z, 0-9 / ,-) Sample IDs MUST BE UNIQUE

ITEM #	SAMPLE ID	MATRIX CODE (see valid codes to left)	SAMPLE TYPE (G=GRAB C=COMP)	COLLECTED COMPOSITE START DATE	COLLECTED COMPOSITE START TIME	COLLECTED COMPOSITE END/GRAB DATE	COLLECTED COMPOSITE END/GRAB TIME	SAMPLE TEMP AT COLLECTION	# OF CONTAINERS	Unpreserved	H_2SO_4	HNO_3	HCl	NaOH	$Na_2S_2O_3$	Methanol	Other	Analysis Test Y/N	Gross Alpha	Gross Beta	Strontium 90	Uranium	Tritium	Pace Project No./ Lab I.D.
1	North Anna Intake		G	7/19/11		1300			1	X									X	X				3050679
2																								Note: If Gross Alpha exceeds
3																								5 picocuries / liter, then analyze
4																								for Radium 226 and Radium 228
5																								
6																								
7																								
8																								
9																								
10																								
11																								
12																								

ADDITIONAL COMMENTS	RELINQUISHED BY / AFFILIATION	DATE	TIME	ACCEPTED BY / AFFILIATION	DATE	TIME	SAMPLE CONDITIONS			
	[signature]	7/21/11	0900	[signature]	7/22/11	1000	N/A	N	N	Y

SAMPLER NAME AND SIGNATURE			Temp in °C	Received on Ice (Y/N)	Custody Sealed Cooler (Y/N)	Samples Intact (Y/N)
PRINT Name of SAMPLER: Glenn Bishop						
SIGNATURE of SAMPLER: [signature]	DATE Signed (MM/DD/YY): 7/21/11					

*Important Note: By signing this form you are accepting Pace's NET 30 day payment terms and agreeing to late charges of 1.5% per month for any invoices not paid within 30 days.

Sample Condition Upon Receipt

Pace Analytical

Client Name: Dominion Project # 30501679

Courier: ☐ Fed Ex ☐ UPS ☐ USPS ☐ Client ☐ Commercial ☐ Pace Other _____

Tracking #: 12 62V 97501 9373 3232

Custody Seal on Cooler/Box Present: ☐ yes ☑ no Seals intact: ☐ yes ☐ no

Optional
Proj. Due Date:
Proj. Name:

Packing Material: ☐ Bubble Wrap ☐ Bubble Bags ☑ None ☐ Other _____

Thermometer Used 3 5 Type of Ice: Wet Blue None ☐ Samples on ice, cooling process has begun

Cooler Temperature NA Biological Tissue is Frozen: Yes No

Date and Initials of person examining contents: 7/22/11 RMJ

Temp should be above freezing to 6°C

		Comments:
Chain of Custody Present:	☑Yes ☐No ☐N/A	1.
Chain of Custody Filled Out:	☑Yes ☐No ☐N/A	2.
Chain of Custody Relinquished:	☑Yes ☐No ☐N/A	3.
Sampler Name & Signature on COC:	☑Yes ☐No ☐N/A	4.
Samples Arrived within Hold Time:	☑Yes ☐No ☐N/A	5.
Short Hold Time Analysis (<72hr):	☐Yes ☑No ☐N/A	6.
Rush Turn Around Time Requested:	☐Yes ☑No ☐N/A	7.
Sufficient Volume:	☑Yes ☐No ☐N/A	8.
Correct Containers Used:	☑Yes ☐No ☐N/A	9.
-Pace Containers Used:	☐Yes ☑No ☐N/A	
Containers Intact:	☑Yes ☐No ☐N/A	10.
Filtered volume received for Dissolved tests	☐Yes ☐No ☑N/A	11.
Sample Labels match COC:	☑Yes ☐No ☐N/A	12.
-Includes date/time/ID/Analysis Matrix: WT		
All containers needing preservation have been checked.	☑Yes ☐No ☐N/A	13. 30ml's HNO3 1322 7/22/11 RMJ
All containers needing preservation are found to be in compliance with EPA recommendation.	☐Yes ☑No ☐N/A	
exceptions: VOA, coliform, TOC, O&G, WI-DRO (water)	☐Yes ☑No	Initial when completed RMJ Lot # of added preservative PF11 01174
Samples checked for dechlorination:	☐Yes ☐No ☑N/A	14.
Headspace in VOA Vials (>6mm):	☐Yes ☐No ☑N/A	15.
Trip Blank Present:	☐Yes ☐No ☑N/A	16.
Trip Blank Custody Seals Present	☐Yes ☐No ☑N/A	
Pace Trip Blank Lot # (if purchased): _____		

Client Notification/ Resolution: Field Data Required? Y / N

Person Contacted: _____ Date/Time: _____

Comments/ Resolution: _____

Project Manager Review: [signature] **Date:** 7/25/11

Note: Whenever there is a discrepancy affecting North Carolina compliance samples, a copy of this form will be sent to the North Carolina DEHNR Certification Office (i.e out of hold, incorrect preservative, out of temp, incorrect containers)

F-ALLC003-4 23Feb2010

DOMINION LABORATORY SERVICES

REPORT PRODUCED ON 09/15/2011

CERTIFICATE OF ANALYSIS TEST RESULTS BY SAMPLE

Location: NORTH ANNA

Submitter: GLENN BISHOP

System Laboratory Number: 391009
Description :INTAKE

Sample Date: 07/19/2011

Parameter		Result	Method	Test Code	Analyst	Date Analyzed	Time Analyzed
Ammonia as N, PPM		0.05	SM18TH 4500NH3F	NH3	DAWNE01	07/28/2011	1642
Boron as B, PPM		0.07	SM18TH 4500-B B	B	DONNA13	08/03/2011	1100
COD, PPM		7.31	HACH 8000	COD	DONNA13	08/02/2011	1030
Fluoride as F, PPM		0.073	EPA 300	FIC	DAWNE01	08/04/2011	2056
NO3+NO2, PPM		0.03	EPA 353.2	NO3NO2	DAWNE01	07/21/2011	909
Oil and Grease, PPM	<	5.00	EPA 1664A	O&G	TANYA19	07/22/2011	930
Phenol, PPM	<	0.01	EPA 420.1	PHENOL	TANYA19	08/12/2011	1252
Sulfate as SO4, PPM		6.19	EPA 300	SO4IC	DAWNE01	08/04/2011	2056
TK Nitrogen as N,PPM	<	0.30	EPA 351.2	TKN	DONNA13	08/11/2011	1045
TOC, PPM		3.7	SM18TH 5310B	TOC	DONNA13	08/03/2011	1302
Total Phos. as P,PPM	<	0.05	SM18TH 4500-P	TP	TANYA19	08/11/2011	1325
Aluminum as Al, PPM		0.36	SM18TH 3111D	AL	DAWNE01	08/24/2011	1151
Antimony as Sb, ppb	<	1.	SM18TH 3113B	SBPPB	STEVE72	08/01/2011	951
Arsenic as As, ppb	<	3.	SM18TH 3113B	ASPPB	STEVE72	08/01/2011	844
Barium as Ba, ppb		19.	SM18TH 3113B	BAPPB	STEVE72	09/08/2011	1314
Beryllium as Be, ppb	<	0.2	SM18TH 3113B	BEPPB	STEVE72	09/13/2011	604
Cadmium as Cd, ppb	<	0.3	SM18TH 3113B	CDPPB	STEVE72	09/13/2011	1109
Chromium as Cr, ppb	<	1.	SM18TH 3113B	CRPPB	STEVE72	09/13/2011	1226
Cobalt as Co, ppb	<	0.6	SM18TH 3113B	COPPB	STEVE72	09/13/2011	618
Copper as Cu, ppb		2.	SM18TH 3113B	CUPPB	STEVE72	08/01/2011	1627
Iron as Fe, PPM		0.39	SM18TH 3111B	FE	DAWNE01	08/12/2011	957
Lead as Pb, ppb	<	1.	SM18TH 3113B	PBPPB	STEVE72	08/01/2011	1758
Magnesium as Mg, PPM		2.39	SM18TH 3111B	MG	DAWNE01	08/16/2011	1609
Manganese as Mn, PPM		0.10	SM18TH 3111B	MN	DAWNE01	08/12/2011	1046
Mercury as Hg, ppb	<	0.2	SM18TH 3112B	HGPPB	STEVE72	07/27/2011	743
Molybdenum as Mo,ppb		7.	SM18TH 3113B	MOPPB	STEVE72	09/09/2011	903
Nickel as Ni, ppb	<	5.	SM18TH 3113B	NIPPB	STEVE72	08/01/2011	1931
Selenium as Se, ppb	<	3.	SM18TH 3113B	SEPPB	STEVE72	08/01/2011	1030
Silver as Ag, ppb	<	0.1	SM18TH 3113B	AGPPB	STEVE72	09/09/2011	1034
Thallium as Tl, ppb	<	0.2	EPA 279.2	TLPPB	STEVE72	08/01/2011	1345
Tin as Sn, ppb	<	5.	SM18TH 3113B	SNPPB	STEVE72	09/06/2011	1006
Titanium as Ti, ppb	<	2.	EPA 283.2	TIPPB	STEVE72	09/13/2011	834
Zinc as Zn, PPM	<	0.010	SM18TH 3111B	ZN	DAWNE01	08/12/2011	1132
Methyl Chloride, ppb	<	1.10	EPA 624	VOA624	CHAR130	07/26/2011	1857
Methyl Bromide, ppb	<	1.40	EPA 624	VOA624	CHAR130	07/26/2011	1857
Vinyl Chloride, ppb	<	1.80	EPA 624	VOA624	CHAR130	07/26/2011	1857
Chloroethane, ppb	<	1.10	EPA 624	VOA624	CHAR130	07/26/2011	1857

DOMINION LABORATORY SERVICES
==========
REPORT PRODUCED ON 09/15/2011

CERTIFICATE OF ANALYSIS TEST RESULTS BY SAMPLE

Location: NORTH ANNA

Submitter: GLENN BISHOP

System Laboratory Number: 391009
Description :INTAKE

Sample Date: 07/19/2011

Parameter	Result	Method	Test Code	Analyst	Date Analyzed	Time Analyzed
Methylene Chloride, ppb	< 2.80	EPA 624	VOA624	CHAR130	07/26/2011	1857
Acrolein, ppb	< 10.00	EPA 624	VOA624	CHAR130	07/26/2011	1857
Acrylonitrile, ppb	< 1.50	EPA 624	VOA624	CHAR130	07/26/2011	1857
Trichlorofluoromethane, ppb	< 2.30	EPA 624	VOA624	CHAR130	07/26/2011	1857
1,1-Dichloroethylene, ppb	< 2.80	EPA 624	VOA624	CHAR130	07/26/2011	1857
1,1-Dichloroethane, ppb	< 4.70	EPA 624	VOA624	CHAR130	07/26/2011	1857
1,2-Trans-Dichloroethylene, ppb	< 1.60	EPA 624	VOA624	CHAR130	07/26/2011	1857
Chloroform, ppb	< 1.60	EPA 624	VOA624	CHAR130	07/26/2011	1857
1,2-Dichloroethane, ppb	< 2.80	EPA 624	VOA624	CHAR130	07/26/2011	1857
1,1,1-Trichloroethane, ppb	< 3.80	EPA 624	VOA624	CHAR130	07/26/2011	1857
Carbon Tetrachloride, ppb	< 2.80	EPA 624	VOA624	CHAR130	07/26/2011	1857
Dichlorobromomethane, ppb	< 2.20	EPA 624	VOA624	CHAR130	07/26/2011	1857
1,2-Dichloropropane, ppb	< 6.00	EPA 624	VOA624	CHAR130	07/26/2011	1857
Cis-1 3-Dichloropropylene, ppb	< 5.00	EPA 624	VOA624	CHAR130	07/26/2011	1857
Trans-1 3-Dichloropropylene, ppb	< 0.90	EPA 624	VOA624	CHAR130	07/26/2011	1857
Trichloroethylene, ppb	< 1.90	EPA 624	VOA624	CHAR130	07/26/2011	1857
Chlorodibromomethane, ppb	< 3.10	EPA 624	VOA624	CHAR130	07/26/2011	1857
Benzene, ppb	< 4.40	EPA 624	VOA624	CHAR130	07/26/2011	1857
1,1,2-Trichloroethane, ppb	< 5.00	EPA 624	VOA624	CHAR130	07/26/2011	1857
2-Chloroethylvinyl Ether, ppb	< 1.20	EPA 624	VOA624	CHAR130	07/26/2011	1857
Bromoform, ppb	< 4.70	EPA 624	VOA624	CHAR130	07/26/2011	1 857
1,1,2,2-Tetrachloroethane, ppb	< 6.90	EPA 624	VOA624	CHAR130	07/26/2011	1857
Tetrachloroethylene, ppb	< 4.10	EPA 624	VOA624	CHAR130	07/26/2011	1857
Toluene, ppb	< 6.00	EPA 624	VOA624	CHAR130	07/26/2011	1857
Chlorobenzene, ppb	< 6.00	EPA 624	VOA624	CHAR130	07/26/2011	1857
Ethylbenzene, ppb	< 7.20	EPA 624	VOA624	CHAR130	07/26/2011	1857
1,3 Dichlorobenzene, ppb	< 5.00	EPA 624	VOA624	CHAR130	07/26/2011	1857
1,4 Dichlorobenzene, ppb	< 5.00	EPA 624	VOA624	CHAR130	07/26/2011	1857
1,2 Dichlorobenzene, ppb	< 5.00	EPA 624	VOA624	CHAR130	07/26/2011	1857
Phenol, ppb	< 2.70	EPA 625	ACID625	CHAR130	08/09/2011	159
2-Chlorophenol, ppb	< 3.30	EPA 625	ACID625	CHAR130	08/09/2011	159
2-Nitrophenol, ppb	< 3.60	EPA 625	ACID625	CHAR130	08/09/2011	159
2,4-Dimethylphenol, ppb	< 5.20	EPA 625	ACID625	CHAR130	08/09/2011	159
2,4-Dichlorophenol, ppb	< 5.60	EPA 625	ACID625	CHAR130	08/09/2011	159
4-Chloro-3-Methylphenol, ppb	< 7.50	EPA 625	ACID625	CHAR130	08/09/2011	159
2,4,6-Trichlorophenol, ppb	< 2.70	EPA 625	ACID625	CHAR130	08/09/2011	159
2,4-Dinitrophenol, ppb	< 42.00	EPA 625	ACID625	CHAR130	08/09/2011	159

DOMINION LABORATORY SERVICES

REPORT PRODUCED ON 09/15/2011

CERTIFICATE OF ANALYSIS TEST RESULTS BY SAMPLE

Location: NORTH ANNA

Submitter: GLENN BISHOP

System Laboratory Number: 391009
Description :INTAKE

Sample Date: 07/19/2011

Parameter		Result	Method	Test Code	Analyst	Date Analyzed	Time Analyzed
4-Nitrophenol, ppb	<	2.40	EPA 625	ACID625	CHAR130	08/09/2011	159
2-Methyl-4,6-Dinitrophenol, ppb	<	24.00	EPA 625	ACID625	CHAR130	08/09/2011	159
Pentachlorophenol, ppb	<	3.60	EPA 625	ACID625	CHAR130	08/09/2011	159
Dis. Tl, ppb	<	0.2	EPA 279.2	TLDISPPB	STEVE72	08/01/2011	1345
Dis. Ti, ppb	<	2.	EPA 283.2	TIDISPPB	STEVE72	09/13/2011	834
Dis. Sn, ppb	<	5.	SM18TH 3113B	SNDISPPB	STEVE72	09/06/2011	1006
Dis. Se, ppb	<	3.	SM18TH 3113B	SEDISPPB	STEVE72	08/01/2011	1030
Dis. Sb, ppb	<	1.	SM18TH 3113B	SBDISPPB	STEVE72	08/01/2011	951
Dis. Pb, ppb	<	1.	SM18TH 3113B	PBDISPPB	STEVE72	08/01/2011	1758
Dis. Ni, ppb	<	5.	SM18TH 3113B	NIDISPPB	STEVE72	08/01/2011	1931
Dis. Mo, ppb		3.	SM18TH 3113B	MODISPPB	STEVE72	09/09/2011	903
Dis. Hg, ppb	<	0.2	SM18TH 3112B	HGDISPPB	STEVE72	07/27/2011	743
Dis. Cu, ppb		1.	SM18TH 3113B	CUDISPPB	STEVE72	08/01/2011	1627
Dis. Cr, ppb	<	1.	SM18TH 3113B	CRDISPPB	STEVE72	09/13/2011	1226
Dis. Co, ppb	<	0.6	SM18TH 3113B	CODISPPB	STEVE72	09/13/2011	618
Dis. Cd, ppb	<	0.3	SM18TH 3113B	CDDISPPB	STEVE72	09/13/2011	1109
Dis. Be, ppb	<	0.2	SM18TH 3113B	BEDISPPB	STEVE72	09/13/2011	604
Dis. Ba, ppb		18.	SM18TH 3113B	BADISPPB	STEVE72	09/08/2011	1314
Dis. As, ppb	<	3.	SM18TH 3113B	ASDISPPB	STEVE72	08/01/2011	844
Dis. Ag, ppb	<	0.1	SM18TH 3113B	AGDISPPB	STEVE72	09/09/2011	1034
Dis. Zn, PPM	<	0.010	SM18TH 3111B	ZNDIS	DAWNE01	08/12/2011	1132
Dis. Mn, PPM		0.02	SM18TH 3111B	MNDIS	DAWNE01	08/12/2011	1046
Dis. Mg, PPM		2.25	SM18TH 3111B	MGDIS	DAWNE01	08/16/2011	1609
Dis. Fe, PPM		0.10	SM18TH 3111B	FEDIS	DAWNE01	08/12/2011	957
Dis. Al, PPM		0.15	SM18TH 3111D	ALDIS	DAWNE01	08/24/2011	1151
T-Dis. Solids, PPM		61.0	SM18TH 2540C	TDS	TANYA19	07/21/2011	1400
Nitrate as N, PPM	<	0.01	EPA 353.2	NO3	DAWNE01	07/21/2011	909
Chloride as Cl, PPM		5.64	EPA 300	CLIC	DAWNE01	08/04/2011	2056
T-Hard. as CaCO3,PPM		32.49	SM18TH 2340C	HARD	TANYA19	07/26/2011	930
Gross Alpha, pCi/L	<	1.610	EPA 900.0	RADIO	HERBE31	07/26/2011	1255
Gross Beta, pCi/L		2.790	EPA 900.0	RADIO	HERBE31	07/26/2011	1255
N-Nitrosodimethylamine, ppb	<	6.20	EPA 625	BN625	CHAR130	08/08/2011	1857
Bis(-2-Chloroethyl) ether, ppb	<	5.70	EPA 625	BN625	CHAR130	08/08/2011	1857
Bis(2-Chloroisopropyl) ether, ppb	<	5.70	EPA 625	BN625	CHAR130	08/08/2011	1857
N-nitroso-Di-n-propylamine, ppb	<	3.60	EPA 625	BN625	CHAR130	08/08/2011	1857
Hexachloroethane, ppb	<	2.40	EPA 625	BN625	CHAR130	08/08/2011	1857
Nitrobenzene, ppb	<	4.20	EPA 625	BN625	CHAR130	08/08/2011	1857

DOMINION LABORATORY SERVICES

REPORT PRODUCED ON 09/15/2011

CERTIFICATE OF ANALYSIS TEST RESULTS BY SAMPLE

Location: NORTH ANNA

Submitter: GLENN BISHOP

System Laboratory Number: 391009
Description :INTAKE

Sample Date: 07/19/2011

Parameter		Result	Method	Test Code	Analyst	Date Analyzed	Time Analyzed
Isophorone, ppb	<	5.10	EPA 625	BN625	CHAR130	08/08/2011	1857
Bis(-2-Chloroethoxy) Methane, ppb	<	5.30	EPA 625	BN625	CHAR130	08/08/2011	1857
1,2,4-Trichlorobenzene, ppb	<	7.90	EPA 625	BN625	CHAR130	08/08/2011	1857
Naphthalene, ppb	<	3.80	EPA 625	BN625	CHAR130	08/08/2011	1857
Hexachlorobutadiene, ppb	<	1.80	EPA 625	BN625	CHAR130	08/08/2011	1857
Hexachlorocyclopentadiene, ppb	<	10.00	EPA 625	BN625	CHAR130	08/08/2011	1857
2-Chloronaphthalene, ppb	<	4.60	EPA 625	BN625	CHAR130	08/08/2011	1857
Dimethyl Phthalate, ppb	<	7.50	EPA 625	BN625	CHAR130	08/08/2011	1857
Acenaphthylene, ppb	<	3.50	EPA 625	BN625	CHAR130	08/08/2011	1857
2,6-Dinitrotoluene, ppb	<	3.40	EPA 625	BN625	CHAR130	08/08/2011	1857
Acenaphthene, ppb	<	3.00	EPA 625	BN625	CHAR130	08/08/2011	1857
2,4-Dinitrotoluene, ppb	<	5.70	EPA 625	BN625	CHAR130	08/08/2011	1857
Diethylphthalate, ppb	<	7.40	EPA 625	BN625	CHAR130	08/08/2011	1857
Fluorene, ppb	<	2.20	EPA 625	BN625	CHAR130	08/08/2011	1857
4-Chlorophenyl-phenylether, ppb	<	4.20	EPA 625	BN625	CHAR130	08/08/2011	1857
N-nitrosodiphenylamine, ppb	<	2.70	EPA 625	BN625	CHAR130	08/08/2011	1857
1,2-Diphenylhydrazine, ppb	<	8.80	EPA 625	BN625	CHAR130	08/08/2011	1857
4-Bromophenyl-phenylether, ppb	<	3.00	EPA 625	BN625	CHAR130	08/08/2011	1857
Hexachlorobenzene, ppb	<	3.10	EPA 625	BN625	CHAR130	08/08/2011	1857
Phenanthrene, ppb	<	5.40	EPA 625	BN625	CHAR130	08/08/2011	1857
Anthracene, ppb	<	1.90	EPA 625	BN625	CHAR130	08/08/2011	1857
Di-n-Butylphthalate, ppb	<	6.40	EPA 625	BN625	CHAR130	08/08/2011	1857
Fluoranthene, ppb	<	2.20	EPA 625	BN625	CHAR130	08/08/2011	1857
Benzidine, ppb	<	63.00	EPA 625	BN625	CHAR130	08/08/2011	1857
Pyrene, ppb	<	3.80	EPA 625	BN625	CHAR130	08/08/2011	1857
Butylbenzylphthalate, ppb	<	2.50	EPA 625	BN625	CHAR130	08/08/2011	1857
Chrysene, ppb	<	2.50	EPA 625	BN625	CHAR130	08/08/2011	1857
3,3'-Dichlorobenzidine, ppb	<	16.50	EPA 625	BN625	CHAR130	08/08/2011	1857
Benzo (a) Anthracene, ppb	<	7.80	EPA 625	BN625	CHAR130	08/08/2011	1857
Bis(2-ethylhexyl) Phthalate, ppb	<	2.50	EPA 625	BN625	CHAR130	08/08/2011	1857
Di-n-octyl Phthalate, ppb	<	2.50	EPA 625	BN625	CHAR130	08/08/2011	1857
Benzo (b) fluoranthene, ppb	<	4.80	EPA 625	BN625	CHAR130	08/08/2011	1857
Benzo (k) fluoranthene, ppb	<	2.50	EPA 625	BN625	CHAR130	08/08/2011	1857
Benzo (a) pyrene, ppb	<	2.50	EPA 625	BN625	CHAR130	08/08/2011	1857
Indeno (1 2 3-cd) pyrene, ppb	<	3.70	EPA 625	BN625	CHAR130	08/08/2011	1857
Dibenzo (a h) anthracene, ppb	<	2.50	EPA 625	BN625	CHAR130	08/08/2011	1857
Benzo (g h i) perylene, ppb	<	4.10	EPA 625	BN625	CHAR130	08/08/2011	1857

Primary Laboratories, Inc.

7423 Lee Davis Road • Mechanicsville, VA 23111 • Telephone (804) 559-9004 • Fax (804) 559-9306

ANALYTICAL LABORATORY REPORT

12-Aug-11

Dominion Virginia Power
Attn: Glenn Bishop
4111 Castlewood Road
Richmond, Va. 23234

Date Received: 19-Jul-11
Date Sampled: 19-Jul-11
Work Order No: 1107153-01
Client ID: **North Anna PS** 391009

	Test Description	Final Result	Reporting Limit	Units of Measure	Method Numbers*	Date Analyzed	Tech. Initials
DLJ	~~O&G~~	<5.0	5.0	mg/L	EPA 1664 A	29-Jul-11 at 10:30	HV
DLJ	Phenol	0.06	0.04	mg/L	5530B C	8-Aug-11 at 12:00	NA
DLJ	Ammonia	0.02	0.01	mg/L	4500NH$_3$ F	28-Jul-11 at 9:30	NA
DLJ	TKN	<0.20	0.20	mg/L	4500-N$_{org}$ C	29-Jul-11 at 9:30	NA
DLJ	Total Phosphorus	0.04	0.01	mg/L	4500P E	29-Jul-11 at 11:00	NA
DLJ	COD	20.2	2.0	mg/L	5220 C	8-Aug-11 at 15:00	NA
DLJ	Nitrate/Nitrite	0.03	0.01	mg/L	4500 NO$_3^-$ E	22-Jul-11 at 15:00	NA
DLJ	TOC	<1.00	1.00	mg/L	SW-846 9060	22-Jul-11 at 9:30	PB
DLJ	TSS	2.7	1.0	mg/L	2540 D	22-Jul-11 at 10:30	HV
DLJ	TDS	114	10	mg/L	2540 C	27-Jul-11 at 9:00	HV
DLJ	Fluoride	0.09	0.01	mg/L	4500F C	27-Jul-11 at 9:30	NA
DLJ	Nitrate	0.03	0.01	mg/L	4500 NO$_3^-$E	21-Jul-11 at 14:30	NA

Primary Laboratories, Inc.
Results

12-Aug-11

Date Sampled: 19-Jul-11
Work Order No: 1107153-01
Client ID: **North Anna PS**

Test Description	Final Result	Reporting Limit	Units of Measure	Method Numbers*	Date Analyzed	Tech. Initials
Cyanide	<0.005	0.005	mg/L	4500CN E	21-Jul-11 at 8:30	HV
Chloride	6.4	0.1	mg/L	4500CL B	2-Aug-11 at 16:00	NA
Sulfate	5.4	2.0	mg/L	$4500SO_4^2E$	27-Jul-11 at 15:00	NA
Hardness	23.7	0.1	mg/L as $CaCO_3$	2340 C	1-Aug-11 at 10:30	NA

Method Numbers*: EPA 625
Date Analyzed: 21-Jul-11
Technician: HV
Units of Measure: ug/L
Date Sampled: 19-Jul-11
Work Order No: 1107153-01
Client ID: **North Anna PS**

Test Description	Final Result	Detection Limit
Acenaphthene	<5.0	5.0
Acenaphthylene	<5.0	5.0
Anthracene	<5.0	5.0
Benzidine	<5.0	5.0
Benzo(a) anthracene	<5.0	5.0
Benzo(b) fluoranthene	<5.0	5.0
Benzo(k) fluoranthene	<5.0	5.0
Benzo(g,h,i) perylene	<5.0	5.0
Benzo(a)pyrene	<5.0	5.0
bis-(2-Chloroethoxy)methane	<5.0	5.0
bis-(2-Chloroethyl)ether	<5.0	5.0
bis-(2-Chloroisopropyl)ether	<5.0	5.0
bis-(2-Ethylhexyl)phthalate	<5.0	5.0
4-Bromophenyl phenyl ether	<5.0	5.0
Butyl benzyl phthalate	<5.0	5.0
2-Chloronaphthalene	<5.0	5.0
4-Chloro-3-methylphenol	<5.0	5.0
2-Chlorophenol	<5.0	5.0
4-Chlorophenyl phenyl ether	<5.0	5.0
Chrysene	<5.0	5.0

Primary Laboratories, Inc.
Results

10-Aug-11

Method Numbers*:	EPA 625
Date Analyzed:	21-Jul-11
Technician:	HV
Units of Measure:	ug/L
Date Sampled:	19-Jul-11
Work Order No:	1107153-01
Client ID:	**North Anna PS**

Test Description	Final Result	Detection Limit
Dibenzo(a,h)anthracene	<5.0	5.0
Di-n-butyl phthalate	<5.0	5.0
1,2-Dichlorobenzene	<5.0	5.0
1,3-Dichlorobenzene	<5.0	5.0
1,4-Dichlorobenzene	<5.0	5.0
3,3-Dichlorobenzidine	<5.0	5.0
2,4-Dichlorophenol	<5.0	5.0
Diethyl phthalate	<5.0	5.0
2,4-Dimethylphenol	<5.0	5.0
Dimethyl phthalate	<5.0	5.0
4,6-Dinitro-2-methylphenol	<5.0	5.0
2,4-Dinitrophenol	<5.0	5.0
2,4-Dinitrotoluene	<5.0	5.0
2,6-Dinitrotoluene	<5.0	5.0
Di-n-octylphthalate	<5.0	5.0
1,2-Diphenylhydrazine	<5.0	5.0
Fluoranthene	<5.0	5.0
Fluorene	<5.0	5.0
Hexachlorobenzene	<5.0	5.0
Hexachlorobutadiene	<5.0	5.0
Hexachlorocyclopentadiene	<5.0	5.0
Hexachloroethane	<5.0	5.0
Indeno(1,2,3-cd) pyrene	<5.0	5.0
Isophorone	<5.0	5.0
Naphthalene	<5.0	5.0
Nitrobenzene	<5.0	5.0
2-Nitrophenol	<5.0	5.0
4-Nitrophenol	<5.0	5.0
N-Nitrosodimethylamine	<5.0	5.0
N-Nitrosodiphenylamine	<5.0	5.0

Primary Laboratories, Inc.
Results

10-Aug-11

Method Numbers*:	EPA 625
Date Analyzed:	21-Jul-11
Technician:	HV
Units of Measure:	ug/L
Date Sampled:	19-Jul-11
Work Order No:	1107153-01
Client ID:	**North Anna PS**

Test Description	Final Result	Detection Limit
N-Nitrosodi-n-propylamine	<5.0	5.0
Pentachlorophenol	<5.0	5.0
Phenanthrene	<5.0	5.0
Phenol	<5.0	5.0
Pyrene	<5.0	5.0
TCDD (Dioxin Screen)	<5.0	5.0
1,2,4-Trichlorobenzene	<5.0	5.0
2,4,6-Trichlorophenol	<5.0	5.0

Primary Laboratories, Inc.
Results

28-Jul-11

Method Numbers*:	EPA 624
Date Analyzed:	2-Aug-11
Technician:	UL *
Units of Measure:	ug/L
Date Sampled:	19-Jul-11
Work Order No:	1107153-01
Client ID:	**North Anna PS**

Test Description	Final Result	Reporting Limit
Acrolein	<5	5
Acrylonitrile	<5	5
Benzene	<1	1
Bromodichloromethane	<1	1
Bromoform	<1	1
Bromomethane	<1	1
Carbon tetrachloride	<1	1
Chlorobenzene	<1	1
Chloroethane	<1	1
2-Chloroethylvinyl ether	<10	10
Chloroform	<1	1
Chloromethane	<1	1
Dibromochloromethane	<1	1
1,2-Dichlorobenzene	<1	1
1,3-Dichlorobenzene	<1	1
1,4-Dichlorobenzene	<1	1
1,1-Dichloroethane	<1	1
1,2-Dichloroethane	<1	1
1,1-Dichloroethene	<1	1
trans-1,2-Dichloroethene	<1	1
1,2-Dichloropropane	<1	1
cis-1,3-Dichloropropene	<1	1
trans-1,3-Dichloropropene	<1	1
Ethylbenzene	<1	1
Methylene Chloride	<10	10
1,1,2,2-Tetrachloroethane	<1	1
Tetrachloroethene	<1	1
Toluene	<1	1
1,1,1-Trichloroethane	<1	1
1,1,2-Trichloroethane	<1	1
Trichloroethene	<1	1
Trichlorofluoromethane	<1	1
Vinyl Chloride	<1	1

* Analysis sub-contracted

Primary Laboratories, Inc.
Results

12-Aug-11

Date Sampled: 19-Jul-11
Work Order No: 1107153-01
Client ID: **North Anna PS**

Test Description	Final Result	Reporting Limit	Units of Measure	Method Numbers*	Date Analyzed	Tech. Initials
Metals, ICP Scan						
Aluminum	0.243	0.050	mg/L	SW-846 3020/6010B	3-Aug-11	HV
Antimony	<0.100	0.100	mg/L	SW-846 3020/6010B	3-Aug-11	HV
Arsenic	<0.050	0.050	mg/L	SW-846 3020/6010B	3-Aug-11	HV
Barium	<0.020	0.020	mg/L	SW-846 3020/6010B	3-Aug-11	HV
Beryllium	<0.010	0.010	mg/L	SW-846 3020/6010B	3-Aug-11	HV
Boron	<1.0	1.0	mg/L	SW-846 3020/6010B	3-Aug-11	HV
Cadmium	<0.010	0.010	mg/L	SW-846 3020/6010B	3-Aug-11	HV
Calcium	2.00	0.020	mg/L	SW-846 3020/6010B	3-Aug-11	HV
Chromium	<0.020	0.020	mg/L	SW-846 3020/6010B	3-Aug-11	HV
Cobalt	<0.020	0.020	mg/L	SW-846 3020/6010B	3-Aug-11	HV
Copper	<0.020	0.020	mg/L	SW-846 3020/6010B	3-Aug-11	HV
Iron	0.323	0.050	mg/L	SW-846 3020/6010B	3-Aug-11	HV
Lead	<0.050	0.050	mg/L	SW-846 3020/6010B	3-Aug-11	HV
Magnesium	2.08	0.020	mg/L	SW-846 3020/6010B	3-Aug-11	HV
Manganese	0.068	0.020	mg/L	SW-846 3020/6010B	3-Aug-11	HV
Mercury	<0.020	0.020	mg/L	SW-846 3112B	2-Aug-11	HV
Molybdenum	0.020	0.020	mg/L	SW-846 3020/6010B	3-Aug-11 at 8:30	HV

Primary Laboratories, Inc.
Results

12-Aug-11

Date Sampled: 19-Jul-11
Work Order No: 1107153-01
Client ID: **North Anna PS**

Test Description	Final Result	Reporting Limit	Units of Measure	Method Numbers*	Date Analyzed	Tech. Initials
Metals, ICP Scan				SW-846		
Nickel	<0.020	0.020	mg/L	3020/6010B	3-Aug-11	HV
				SW-846		
Potassium	2.31	10	mg/L	3020/6010B	3-Aug-11	HV
				SW-846		
Selenium	<0.050	0.050	mg/L	3020/6010B	3-Aug-11	HV
				SW-846		
Silver	<0.020	0.020	mg/L	3020/6010B	3-Aug-11	HV
				SW-846		
Silica	2.96	0.05	mg/L	3020/6010B	3-Aug-11	HV
				SW-846		
Sodium	3.87	10	mg/L	3020/6010B	3-Aug-11	HV
				SW-846		
Tin	<0.020	0.020	mg/L	3020/6010B	3-Aug-11	HV
				SW-846		
Titanium	<10	10	mg/L	3020/6010B	3-Aug-11	HV
				SW-846		
Vanadium	<0.020	0.020	mg/L	3020/6010B	3-Aug-11	HV
				SW-846		
Zinc	<0.010	0.010	mg/L	3020/6010B	3-Aug-11	HV

Primary Laboratories, Inc.
Results

12-Aug-11

Date Sampled: 19-Jul-11
Work Order No: 1107153-01
Client ID: **North Anna PS**

Test Description	Final Result	Reporting Limit	Units of Measure	Method Numbers*	Date Analyzed	Tech. Initials
Diss. Metals, ICP Scan						
Aluminum	<0.050	0.050	mg/L	SW-846 3020/6010B	3-Aug-11	HV
Antimony	<0.100	0.100	mg/L	SW-846 3020/6010B	3-Aug-11	HV
Arsenic	<0.050	0.050	mg/L	SW-846 3020/6010B	3-Aug-11	HV
Barium	<0.020	0.020	mg/L	SW-846 3020/6010B	3-Aug-11	HV
Beryllium	<0.010	0.010	mg/L	SW-846 3020/6010B	3-Aug-11	HV
Cadmium	<0.010	0.010	mg/L	SW-846 3020/6010B	3-Aug-11	HV
Calcium	2.04	0.020	mg/L	SW-846 3020/6010B	3-Aug-11	HV
Chromium	<0.020	0.020	mg/L	SW-846 3020/6010B	3-Aug-11	HV
Cobalt	<0.020	0.020	mg/L	SW-846 3020/6010B	3-Aug-11	HV
Copper	<0.020	0.020	mg/L	SW-846 3020/6010B	3-Aug-11	HV
Iron	<0.050	0.050	mg/L	SW-846 3020/6010B	3-Aug-11	HV
Lead	<0.050	0.050	mg/L	SW-846 3020/6010B	3-Aug-11	HV
Magnesium	2.02	0.020	mg/L	SW-846 3020/6010B	3-Aug-11	HV
Manganese	<0.020	0.020	mg/L	SW-846 3020/6010B	3-Aug-11	HV
Mercury	<0.0005	0.0005	mg/L	SW-846 3020/6010B	2-Aug-11	HV
Molybdenum	<0.020	0.020	mg/L	SW-846 3020/6010B	3-Aug-11 at 8:30	HV

Primary Laboratories, Inc.
Results

12-Aug-11

Date Sampled: 19-Jul-11
Work Order No: 1107153-01
Client ID: **North Anna PS**

Test Description	Final Result	Reporting Limit	Units of Measure	Method Numbers*	Date Analyzed	Tech. Initials
Diss. Metals, ICP Scan						
Nickel	<0.020	0.020	mg/L	SW-846 3020/6010B	3-Aug-11	HV
Potassium	2.40	10	mg/L	SW-846 3020/6010B	3-Aug-11	HV
Selenium	<0.050	0.050	mg/L	SW-846 3020/6010B	3-Aug-11	HV
Silver	<0.020	0.020	mg/L	SW-846 3020/6010B	3-Aug-11	HV
Silica	2.91	0.020	mg/L	SW-846 3020/6010B	3-Aug-11	HV
Sodium	3.87	10	mg/L	SW-846 3020/6010B	3-Aug-11	HV
Tin	<0.020	0.020	mg/L	SW-846 3020/6010B	3-Aug-11	HV
Titanium	<10	10	mg/L	SW-846 3020/6010B	3-Aug-11	HV
Vanadium	<0.020	0.020	mg/L	SW-846 3020/6010B	3-Aug-11	HV
Zinc	<0.010	0.010	mg/L	SW-846 3020/6010B	3-Aug-11	HV

* All methods are Standard Methods 18th Edition unless otherwise noted.

Signature: _____ Date: 8/12/11
Parry L. Bragg
Laboratory Manager

These analytical results are based upon materials provided by the client and are intended for the exclusive use of the client. These analytical results represent the best judgement of Primary Laboratories, Inc. Primary Laboratories, Inc. assumes no responsibility, express or implied, as to the interpretation of the analytical results contained in this report. This report is not to be reproduced except with the written approval of Primary Laboratories, Inc.

Location: North Anna PS	Requested by:	Priority:	
Required Date: 60 days	Phone:	Date Analysis Complete:	
Comment:	Sampled by: WGB	Date Approved Released:	

Bottle Types: O/G=Oil and Grease, PT=Phenols Total, V=Volatiles, M=Metals, A=[Ammonia,TKN,TP,COD,NO_2/NO_3], BOD=Biological Oxygen Demand
TOC=Total Organic Carbon, TSS=[Total Suspended Solids,B,F,NO_2/NO_3,SO_4,TDS,Chloride]
ABN=Acid Base Neutrals, PP=Pesticide/PCBs

Preservatives: HCl=Hydrochloric acid, CS=Cu Sulfate, S=Sulfuric acid, N=Nitric acid, ZA=Zinc acetate, SH=Sodium Hydroxide

Tests Required 1= O/G, Phenol total, Volatiles, [Ammonia, TKN, TP, COD, NO_2/NO_3] , TOC
2= [TSS, *TDS*, B, F, NO_2/NO_3, *Nitrite N, Chlorides*, SO_4]
3= ABN
4= TR and Diss Metals Al,Ba,Co,Fe,Mg,Mo,Mn,Sn,Ti,Sb,As,Be,Cd,Cr,Cu,Pb,Hg,Ni,Se,Ag,Tl,Zn + Hardness

NOTE

Consider:
Flow
Temp (W+S)
pH
TRC

1107153

X - PLACE AN "X" IN THE BOX FOR SAMPLES TO BE SUBMITTED

System Lab Number	X	Sample ID	Sample Date	Sample Time	Comp	Grab	Cl_2 Screen [ABN,Vol]	Dechlor conf timed?	O/G (HCl)	PT (CS S)	V (HCl)	M (N)	A (S)	BOD	TOC (HCl)	TSS	ABN	P/P	Test Required	Notes
		Intake	7/6/11	1300		X	Pos / Neg	Yes / No	1	1	6	2	1		1	1	3		1,2,3,4	Temp =
																				pH =
																				TRC =

Relinquished by: (Signature) [signature]	Date 7/6/11 Time 1730	Received by: (Signature)	Date Time
Relinquished by: (Signature)	Date Time	Received by: (Signature) [signature]	Date 7-19-11 Time 11:00

Dominion Resources
Laboratory Services
11202 Old Stage Road
Chester, VA 23836

5.4°C

coc CPM NA Intake.xlsx

Primary Laboratories, Inc.

7423 Lee Davis Road • Mechanicsville, VA 23111 • Telephone (804) 559-9004 • Fax (804) 559-9306

ANALYTICAL LABORATORY REPORT

10-Oct-11

Dominion Virginia Power
Attn: Glenn Bishop
4111 Castlewood Road
Richmond, Va. 23234

Date Received: 20-Sep-11
Date Sampled: 20-Sep-11
Work Order No: 1109177-01
Client ID: **North Anna Intake**

Test Description	Final Result	Reporting Limit	Units of Measure	Method Numbers*	Date Analyzed	Tech. Initials
HERBICIDES						
2,4-D	<0.010	0.010	mg/L	8151 A	10-Oct-11	HV
2,4,5-TP	<0.002	0.002	mg/L	SW-846 8151A	10-Oct-11	HV

Date Sampled: 20-Sep-11
Work Order No: 1109177-01
Client ID: **North Anna Intake**

Test Description	Final Result	Reporting Limit	Units of Measure	Method Numbers*	Date Analyzed	Tech. Initials
Organophosphorus Pesticides						
Demeton	<1	1	ug/L	622	23-Sep-11	SC**
Malathion	<1	1	ug/L	622	23-Sep-11	SC**
Chlorpyrifos	<0.2	0.2	ug/L	622	23-Sep-11	SC**
Parathion	<1	1	ug/L	622	23-Sep-11	SC**
Guthion	<1	1	ug/L	622	23-Sep-11	SC**
Diazinon	<1	1	ug/L	622	23-Sep-11	SC**

** Analysis sub-contracted to Reed & Associates

Primary Laboratories, Inc.
Results

10-Oct-11

Date Sampled: 20-Sep-11
Work Order No: 1109177-01
Client ID: **North Anna Intake**

Test Description	Final Result	Reporting Limit	Units of Measure	Method Numbers*	Date Analyzed	Tech. Initials
Pesticides						
Aldrin	<0.05	0.05	ug/L	EPA 608	5-Oct-11	HV
Chlordane	<0.20	0.20	ug/L	EPA 608	5-Oct-11	HV
Dieldrin	<0.10	0.10	ug/L	EPA 608	5-Oct-11	HV
4,4-DDT	<0.10	0.10	ug/L	EPA 608	5-Oct-11	HV
4,4-DDE	<0.10	0.10	ug/L	EPA 608	5-Oct-11	HV
4,4-DDD	<0.10	0.10	ug/L	EPA 608	5-Oct-11	HV
Endosulfan sulfate	<0.10	0.10	ug/L	EPA 608	5-Oct-11	HV
Endosulfan I	<0.10	0.10	ug/L	EPA 608	5-Oct-11	HV
Endosulfan II	<0.10	0.10	ug/L	EPA 608	5-Oct-11	HV
Endrin	<0.10	0.10	ug/L	EPA 608	5-Oct-11	HV
Alpha-BHC	<0.10	0.10	ug/L	EPA 608	5-Oct-11	HV
Beta-BHC	<0.10	0.10	ug/L	EPA 608	5-Oct-11	HV
Delta-BHC	<0.10	0.10	ug/L	EPA 608	5-Oct-11	HV
Gamma-BHC (Lindane)	<0.10	0.10	ug/L	EPA 608	5-Oct-11	HV
Heptachlor	<0.05	0.05	ug/L	EPA 608	5-Oct-11	HV
Endrin Aldehyde	<0.10	0.10	ug/L	EPA 608	5-Oct-11	HV
Heptachlor Epoxide	<0.10	0.10	ug/L	EPA 608	5-Oct-11	HV
Kepone	<0.10	0.10	ug/L	EPA 608	5-Oct-11	HV
Methoxychlor	<0.10	0.10	ug/L	EPA 608	5-Oct-11	HV
Mirex	<0.10	0.10	ug/L	EPA 608	5-Oct-11	HV
PCB-1016	<1.0	1.0	ug/L	EPA 608	5-Oct-11	HV
PCB-1221	<1.0	1.0	ug/L	EPA 608	5-Oct-11	HV
PCB-1232	<1.0	1.0	ug/L	EPA 608	5-Oct-11	HV
PCB-1242	<1.0	1.0	ug/L	EPA 608	5-Oct-11	HV
PCB-1248	<1.0	1.0	ug/L	EPA 608	5-Oct-11	HV
PCB-1254	<1.0	1.0	ug/L	EPA 608	5-Oct-11	HV
PCB-1260	<1.0	1.0	ug/L	EPA 608	5-Oct-11	HV
Toxaphene	<5.0	5.0	ug/L	EPA 608	5-Oct-11	HV

Primary Laboratories, Inc.
Results

10-Oct-11

Date Sampled: 20-Sep-11
Work Order No: 1109177-01
Client ID: **North Anna Intake**

Test Description	Final Result	Reporting Limit	Units of Measure	Method Numbers*	Date Analyzed	Tech. Initials
Cyanide	<0.01	0.01	mg/L	4500CN E	28-Sep-11	NA
BOD	4.1	3.0	mg/L	5210 B	21-Sep-11 at 8:00	NA
Sulfide	<0.05	0.05	mg/L	$4500S^{2-}E$	21-Sep-11 at 7:30	NA
Hydrogen Sulfide	<0.05	0.05	mg/L	376.1	28-Sep-11	HV
Nonylphenol	<0.01	0.01	mg/L	8270C	10-Oct-11	HV
Hexavalent Chromium	<0.005	0.005	mg/L	3500	21-Sep-11 at 8:30	NA
Bromide	4.9	0.1	mg/L	Titrimetric	28-Sep-11	PB
Color	8.0	5.0	PCU	2120 B	21-Sep-11 at 10:30	NA
MBAS	<0.01	0.01	mg/L	5540C	19-Sep-11	HV
Metals						
Chromium III	<0.02	0.02	mg/L	3120 B	26-Sep-11	HV

Date Sampled: 20-Sep-11
Work Order No: 1109177-01
Client ID: **Outfall North Anna 111**

Test Description	Final Result	Reporting Limit	Units of Measure	Method Numbers*	Date Analyzed	Tech. Initials
Fecal Coliform	<2	2	MPN/100ml	9221E	20-Sep-11 at 14:30	MS

* All methods are Standard Methods 18th Edition unless otherwise noted.

Signature: _____ Date: 10/11/11

Parry L. Bragg
Laboratory Manager

These analytical results are based upon materials provided by the client and are intended for the exclusive use of the client. These analytical results represent the best judgement of Primary Laboratories, Inc. Primary Laboratories, Inc. assumes no responsibility, express or implied, as to the interpretation of the analytical results contained in this report. This report is not to be reproduced except with the written approval of Primary Laboratories, Inc.

Note: 2-1 sample for STP Fecals

1109177

Location:	North Anna PS	Requested by:	Priority
Required Date: 30 days		Phone:	Date Analysis Complete
Comment:		Sampled by:	Date Approved Released:

Bottle Types: Cn=Cyanide, FC=Fecals, EC = E coli, H_2S = Hydrogen sulfide, Asb = Asbestos, BOD=Biological Oxygen Demand
P/P=Pesticide / PCBs, TBT = Tributyltin, R = Radioactivity, Br = Bromide, Color, Sul = Sulfate, Sur = Surfactants, DS = Dioxin screen

Preservatives: HCl=Hydrochloric acid, CS=Cu Sulfate, S=Sulfuric acid, N=Nitric acid, ZA=Zinc acetate, SH=Sodium Hydroxide

Tests Required 1= Cn, Free Cn, H_2S, BOD, Pest / PCBs, Nonylphenol [1,2-Diphenylhydrazine]
2 = Cd, Cu
3= [Br, Color], Sulfide, Surfactants
4= Fecal coliform

X - PLACE AN "X" IN THE BOX FOR SAMPLES TO BE SUBMITTED

System Lab Number	x	Sample ID	Sample Date	Sample Time	Comp	Grab	Cd Screen [Cu]	Dioxin screen [Cu]	Sulfide Screen [Cu]	Cn + Free Cn	FC	EC	H_2S	Asb	BOD	P/P	TBT	Nonylphenol	1,2-Diphenylhydrazine	Cd, Cu	Br, Color	Sul	Sur	DS	Test Required	Notes
										SH			ZA,SH									ZA,SH				
		North Anna Intake	7/8/11	11:50		X	~~Pest / Neg~~	~~Y / Neg~~	Pest / Neg	1			2		1	4		1		2	1	1	1		1,2,3	Do Pest / PCBs per attached list ~~For 1,2-Diphenylhydrazine, use Method 526 at QL = 0.4 ppb~~
		~~Intake~~																								Temp 23.7 pH 7.5 TRC 2.0
		Outfall North Anna 111	7/8/11	11:50		X					1														4	Temp = 25.6

Relinquished by: (Signature)	Date 7/8/11 Time 15:30	Received by: (Signature)	Date Time
Relinquished by: (Signature)	Date Time	Received by: (Signature)	Date 7/12/11 Time 13:35

Primary Laboratories
7423 Lee Davis Road
Mechanicsville, VA 23111
804-550-9004

Note:

coc CPM NA Intake.xlsx

Primary Laboratories, Inc.

7423 Lee Davis Road • Mechanicsville, VA 23111 • Telephone (804) 559-9004 • Fax (804) 559-9306

ANALYTICAL LABORATORY REPORT

10-Oct-11

Dominion Virginia Power
Attn: Glenn Bishop
4111 Castlewood Road
Richmond, Va. 23234

Date Received: 7-Oct-11
Date Sampled: 7-Oct-11
Work Order No: 1110073-01
Client ID: **Outfall North Anna 111**

Test Description	Final Result	Reporting Limit	Units of Measure	Method Numbers*	Date Analyzed	Time Analyzed	Tech. Initials
Fecal Coliform	<2	2	MPN/100ml	9221E	7-Oct-11	10:00	MS

*All methods are from Standard Methods 18th Edition, unless otherwise noted.

Signature: _____ Date: 10/10/11
Parry L. Bragg
Laboratory Manager

These analytical results are based upon materials provided by the client and are intended for the exclusive use of the client. These analytical results represent the best judgement of Primary Laboratories, Inc. Primary Laboratories, Inc. assumes no responsibility, express or implied, as to the interpretation of the analytical results contained in this report. This report is not to be reproduced except with the written approval of Primary Laboratories, Inc.

Note: 3rd sample for STP Recycle

Location: North Anna PS	Requested by:	Priority:	
Required Date: 30 days	Phone:	Date Analysis Complete:	
Comment:	Sampled by:	Date Approved Released:	

Bottle Types: Cn=Cyanide, FC=Fecals, EC = E coli, H_2S = Hydrogen sulfide, Asb = Asbestos, BOD=Biological Oxygen Demand
P/P=Pesticide / PCBs, TBT = Tributyltin, R = Radioactivity, Br = Bromide, Color, Sul = sulfide, Sur = Surfactants, DS = Dioxin screen

Preservatives: HCl=Hydrochloric acid, CS=Cu Sulfate, S=Sulfuric acid, N=Nitric acid, ZA=Zinc acetate, SH=Sodium Hydroxide

Tests Required 1= Fecal coliforms

1110073

X - PLACE AN "X" IN THE BOX FOR SAMPLES TO BE SUBMITTED

System Lab Number	x	Sample ID	Sample Date	Sample Time	Comp	Grab	Cl_2 Screen (Cn, ABN,Vol)	Dechlor cont immed?	Sulfide Screen (Cn)	Cn	FC	EC	H_2S	Asb	BOD	P/P	TBT	Nonylphenol	1,2 Diphenylhydrazine	Cr3, Cr6	Br, Color	Sul	Sur	DS	Test Required	Notes
Preservative										SH			ZA,SH									ZA,SH				
		Outfall North Anna 111	10/7/11	3:19pm		x					1															Temp = 21.0

Relinquished by: (Signature) [signature]	Date 10/7/11	Time 1:22	Received by: (Signature) [signature]
Relinquished by: (Signature)	Date	Time	Received by: (Signature)

Received by: (Signature) [signature]	Date 10/7/11	Time 1000
Received by: (Signature)	Date	Time

Primary Laboratories
7423 Lee Davis Road
Mechanicsville, VA 23111
804-559-9004

Primary Laboratories, Inc.

7423 Lee Davis Road • Mechanicsville, VA 23111 • Telephone (804) 559-9004 • Fax (804) 559-9306

ANALYTICAL LABORATORY REPORT

8-Aug-11

Dominion Virginia Power
Attn: Glenn Bishop
4111 Castlewood Road
Richmond, Va. 23234

Date Received: 4-Aug-11
Date Sampled: 4-Aug-11
Work Order No: 1108053-01
Client ID: **Outfall North Anna 001**

Test Description	Final Result	Reporting Limit	Units of Measure	Method Numbers*	Date Analyzed	Tech. Initials
E Coli	1.0	1.0	MPN/100ml	Colilert	4-Aug-11 at 16:55	MS

Date Sampled: 4-Aug-11
Work Order No: 1108053-02
Client ID: **Outfall North Anna 009**

Test Description	Final Result	Reporting Limit	Units of Measure	Method Numbers*	Date Analyzed	Tech. Initials
E Coli	1.0	1.0	MPN/100ml	Colilert	4-Aug-11 at 16:55	MS

Date Sampled: 4-Aug-11
Work Order No: 1108053-03
Client ID: **Outfall North Anna 020**

Test Description	Final Result	Reporting Limit	Units of Measure	Method Numbers*	Date Analyzed	Tech. Initials
E Coli	1.0	1.0	MPN/100ml	Colilert	4-Aug-11 at 16:55	MS

Primary Laboratories, Inc.
Results

8-Aug-11

Date Sampled: 4-Aug-11
Work Order No: 1108053-04
Client ID: **Outfalll North Anna 104**

Test Description	Final Result	Reporting Limit	Units of Measure	Method Numbers*	Date Analyzed	Tech. Initials
E Coli	7.4	1.0	MPN/100ml	Colilert	4-Aug-11 at 16:55	MS

Date Sampled: 4-Aug-11
Work Order No: 1108053-05
Client ID: **Outfall North Anna Intake**

Test Description	Final Result	Reporting Limit	Units of Measure	Method Numbers*	Date Analyzed	Tech. Initials
E Coli	1.0	1.0	MPN/100ml	Colilert	4-Aug-11 at 16:55	MS

Date Sampled: 4-Aug-11
Work Order No: 1108053-06
Client ID: **Outfall North Anna 111**

Test Description	Final Result	Reporting Limit	Units of Measure	Method Numbers*	Date Analyzed	Tech. Initials
Fecal Coliform	1600	2	MPN/100ml	9221E	4-Aug-11 at 16:45	MS

* All methods are Standard Methods 18th Edition unless otherwise noted.

Signature: Parry L. Bragg Date: 8/8/11
Parry L. Bragg
Laboratory Manager

These analytical results are based upon materials provided by the client and are intended for the exclusive use of the client. These analytical results represent the best judgement of Primary Laboratories, Inc. Primary Laboratories, Inc. assumes no responsibility, express or implied, as to the interpretation of the analytical results contained in this report. This report is not to be reproduced except with the written approval of Primary Laboratories, Inc.

Location: North Anna	Requested by:	Priority:
Required Date: 30 days	Phone:	Date Analysis Complete:
Comment:	Sampled by: WGB	Date Approved Released:

Bottle Types: Cn=Cyanide, FC=Fecals, EC = E coli, H_2S = Hydrogen sulfide, Asb = Asbestos, BOD=Biological Oxygen Demand
P/P=Pesticide / PCBs, TBT = Tributyltin, R = Radioactivity, Br = Bromide, Color, Sul = sulfide, Sur = Surfactants, DS = Dioxin screen

Preservatives: HCl=Hydrochloric acid, CS=Cu Sulfate, S=Sulfuric acid, N=Nitric acid, ZA=Zinc acetate, SH=Sodium Hydroxide

Tests Required 1= E coli
2 = Fecals

1108053

X - PLACE AN "X" IN THE BOX FOR SAMPLES TO BE SUBMITTED

System Lab Number	x	Sample ID	Sample Date	Sample Time	Comp	Grab	Cl_2 Screen (Cn)	Oxidizer confirmed?	Sulfide Screen (Cn)	Free Cn	FC	EC	H_2S	Asb	BOD	P/P	TBT	Nonylphenol	1,2,Diphenylhydrazine	Cr3, Cr6	Br, Color	Sul	Sur	DS	Test Required	Notes
Preservative										3H			ZA,SH									ZA,SH				
		Outall North Anna 001	8/4/11	1525		x						1													1	~~For 1,2 Diphenylhydrazine, use Method 526 at QL = 0.1 ppb~~
		Outall North Anna 009		1415		x						1													1	
		Outall North Anna 020		1405		x						1													1	
		Outall North Anna 104		1410		x						1													1	
		Outall North Anna Intake		1400		x						1													1	
		Outall North Anna 111		1360		x					1														2	Temp = ~~30.7~~ 5.2°C

Relinquished by: (Signature) WHG	Date 8/4/11 Time 1635	Received by: (Signature)	Date Time
Relinquished by: (Signature)	Date Time	Received by: (Signature) Rachel Burruss	Date 8-4-11 Time 16:35

Primary Laboratories
7423 Lee Davis Road
Mechanicsville, VA 23111
804-559-9004

coc CPM NA 001,9,20,104,Intake,ecoli.xlsx

DOMINION LABORATORY SERVICES

REPORT PRODUCED ON 10/18/2011

CERTIFICATE OF ANALYSIS TEST RESULTS BY SAMPLE

Location: NORTH ANNA

Submitter: GLENN BISHOP

System Laboratory Number: 392679
Description :OUTFALL 14S

Sample Date: 09/06/2011

Parameter		Result	Method	Test Code	Analyst	Date Analyzed	Time Analyzed
Ammonia as N, PPM		0.06	SM18TH 4500NH3F	NH3	DAWNE01	09/30/2011	1632
Boron as B, PPM	<	0.02	SM18TH 4500-B B	B	DONNA13	09/27/2011	1330
Bromide as Br, PPM		4.00	EPA 320.1	BR	HERBE31	09/28/2011	
COD, PPM		7.65	HACH 8000	COD	DONNA13	09/13/2011	1145
Color		20.	SM18TH 2120B	CLR	HERBE31	09/08/2011	1730
Fluoride as F, PPM		0.051	EPA 300	FIC	DAWNE01	09/30/2011	1452
MBAS as LAS, PPM	<	0.010	SM 5540C	SURF	HERBE31	09/08/2011	
NO3+NO2, PPM		0.38	EPA 353.2	NO3NO2	DONNA13	09/08/2011	1303
Oil and Grease, PPM	<	5.00	EPA 1664A	O&G	TANYA19	09/27/2011	930
Sulfate as SO4, PPM		2.46	EPA 300	SO4IC	DAWNE01	09/30/2011	1452
TK Nitrogen as N,PPM	<	0.30	EPA 351.2	TKN	DONNA13	09/15/2011	1234
TSS, PPM		19.8	SM18TH 2540D	TSS	TANYA19	09/12/2011	1030
Total Phos. as P,PPM		0.53	SM18TH 4500-P	TP	TANYA19	09/15/2011	1330
Aluminum as Al, PPM		0.40	SM18TH 3111D	AL	DAWNE01	10/12/2011	1616
Antimony as Sb, ppb	<	1.	SM18TH 3113B	SBPPB	STEVE72	10/10/2011	1048
Arsenic as As, ppb	<	3.	SM18TH 3113B	ASPPB	STEVE72	09/21/2011	1738
Barium as Ba, ppb		9.	SM18TH 3113B	BAPPB	STEVE72	10/11/2011	833
Beryllium as Be, ppb	<	0.2	SM18TH 3113B	BEPPB	STEVE72	10/10/2011	2152
Cadmium as Cd, ppb	<	0.3	SM18TH 3113B	CDPPB	STEVE72	10/10/2011	1601
Chromium as Cr, ppb		1.	SM18TH 3113B	CRPPB	STEVE72	09/15/2011	1021
Cobalt as Co, ppb	<	0.6	SM18TH 3113B	COPPB	STEVE72	10/10/2011	1855
Copper as Cu, ppb		10.	SM18TH 3113B	CUPPB	STEVE72	10/10/2011	1829
Iron as Fe, PPM		0.54	SM18TH 3111B	FE	DAWNE01	10/12/2011	1523
Lead as Pb, ppb	<	1.	SM18TH 3113B	PBPPB	STEVE72	10/10/2011	1431
Magnesium as Mg, PPM		0.49	SM18TH 3111B	MG	DAWNE01	10/12/2011	1253
Manganese as Mn, PPM		0.02	SM18TH 3111B	MN	DAWNE01	10/12/2011	1213
Mercury as Hg, ppb	<	0.2	SM18TH 3112B	HGPPB	STEVE72	09/15/2011	1015
Molybdenum as Mo,ppb		1.	SM18TH 3113B	MOPPB	STEVE72	10/06/2011	1222
Nickel as Ni, ppb	<	5.	SM18TH 3113B	NIPPB	STEVE72	10/10/2011	1951
Selenium as Se, ppb	<	3.	SM18TH 3113B	SEPPB	STEVE72	09/21/2011	1413
Silver as Ag, ppb	<	0.1	SM18TH 3113B	AGPPB	STEVE72	09/22/2011	841
Thallium as Tl, ppb		0.3	EPA 279.2	TLPPB	STEVE72	10/10/2011	1546
Tin as Sn, ppb	<	5.	SM18TH 3113B	SNPPB	STEVE72	10/06/2011	1002
Titanium as Ti, ppb		32.	EPA 283.2	TIPPB	STEVE72	10/11/2011	833
Zinc as Zn, PPM		0.269	SM18TH 3111B	ZN	DAWNE01	10/12/2011	1124
BOD, PPM	<	3.00	SM 5210 B	BOD	HERBE31	09/09/2011	900
T-Hard. as CaCO3,PPM		17.10	SM18TH 2340C	HARD	TANYA19	09/21/2011	900

Samples received past holding time for nitrates, BOD, color and MBAS.

DOMINION LABORATORY SERVICES

REPORT PRODUCED ON 10/18/2011

CERTIFICATE OF ANALYSIS TEST RESULTS BY SAMPLE

Location: NORTH ANNA

Submitter: GLENN BISHOP

System Laboratory Number: 392679
Description :OUTFALL 14S

Sample Date: 09/06/2011

Parameter	Result	Method	Test Code	Analyst	Date Analyzed	Time Analyzed
Nitrate as N, PPM	0.38	EPA 353.2	NO3	DONNA13	09/08/2011	1303

Samples received past holding time for nitrates, BOD, color and MBAS.

DOMINION LABORATORY SERVICES

REPORT PRODUCED ON 10/18/2011

CERTIFICATE OF ANALYSIS TEST RESULTS BY SAMPLE

Location: NORTH ANNA

Submitter: GLENN BISHOP

System Laboratory Number: 392680
Description :OUTFALL 022S

Sample Date: 09/06/2011

Parameter		Result	Method	Test Code	Analyst	Date Analyzed	Time Analyzed
Ammonia as N, PPM		0.03	SM18TH 4500NH3F	NH3	DAWNE01	09/30/2011	1632
BOD, PPM	<	3.00	SM 5210 B	BOD	HERBE31	09/09/2011	900
Boron as B, PPM	<	0.02	SM18TH 4500-B B	B	DONNA13	09/27/2011	1330
Bromide as Br, PPM		5.20	EPA 320.1	BR	HERBE31	09/28/2011	
COD, PPM		9.71	HACH 8000	COD	DONNA13	09/13/2011	1145
Color		73.	SM18TH 2120B	CLR	HERBE31	09/08/2011	1730
Fluoride as F, PPM		0.060	EPA 300	FIC	DAWNE01	09/30/2011	1452
MBAS as LAS, PPM,	<	0.010	SM 5540C	SURF	HERBE31	09/08/2011	
NO3+NO2, PPM		0.72	EPA 353.2	NO3NO2	DONNA13	09/08/2011	1303
Oil and Grease, PPM	<	5.00	EPA 1664A	O&G	TANYA19	09/27/2011	930
Sulfate as SO4, PPM		6.62	EPA 300	SO4IC	DAWNE01	09/30/2011	1452
TK Nitrogen as N,PPM	<	0.30	EPA 351.2	TKN	DONNA13	09/15/2011	1234
TSS, PPM		35.1	SM18TH 2540D	TSS	TANYA19	09/12/2011	1030
Total Phos. as P,PPM		0.19	SM18TH 4500-P	TP	TANYA19	09/15/2011	1330
Aluminum as Al, PPM		0.73	SM18TH 3111D	AL	DAWNE01	10/12/2011	1616
Antimony as Sb, ppb		6.	SM18TH 3113B	SBPPB	STEVE72	10/10/2011	1048
Arsenic as As, ppb		3.	SM18TH 3113B	ASPPB	STEVE72	09/21/2011	1738
Barium as Ba, ppb		26.	SM18TH 3113B	BAPPB	STEVE72	10/11/2011	833
Beryllium as Be, ppb	<	0.2	SM18TH 3113B	BEPPB	STEVE72	10/10/2011	2152
Cadmium as Cd, ppb	<	0.3	SM18TH 3113B	CDPPB	STEVE72	10/10/2011	1601
Chromium as Cr, ppb		2.	SM18TH 3113B	CRPPB	STEVE72	09/15/2011	1021
Cobalt as Co, ppb	<	0.6	SM18TH 3113B	COPPB	STEVE72	10/10/2011	1855
Copper as Cu, ppb		6.	SM18TH 3113B	CUPPB	STEVE72	10/10/2011	1829
Iron as Fe, PPM		1.23	SM18TH 3111B	FE	DAWNE01	10/12/2011	1523
Lead as Pb, ppb		6.	SM18TH 3113B	PBPPB	STEVE72	10/10/2011	1431
Magnesium as Mg, PPM		1.61	SM18TH 3111B	MG	DAWNE01	10/12/2011	1253
Manganese as Mn, PPM		0.05	SM18TH 3111B	MN	DAWNE01	10/12/2011	1213
Mercury as Hg, ppb	<	0.2	SM18TH 3112B	HGPPB	STEVE72	09/15/2011	1015
Molybdenum as Mo,ppb		2.	SM18TH 3113B	MOPPB	STEVE72	10/06/2011	1222
Nickel as Ni, ppb	<	5.	SM18TH 3113B	NIPPB	STEVE72	10/10/2011	1951
Selenium as Se, ppb	<	3.	SM18TH 3113B	SEPPB	STEVE72	09/21/2011	1413
Silver as Ag, ppb	<	0.1	SM18TH 3113B	AGPPB	STEVE72	09/22/2011	841
Thallium as Tl, ppb		0.4	EPA 279.2	TLPPB	STEVE72	10/10/2011	1546
Tin as Sn, ppb	<	5.	SM18TH 3113B	SNPPB	STEVE72	10/06/2011	1002
Titanium as Ti, ppb		24.	EPA 283.2	TIPPB	STEVE72	10/11/2011	833
Zinc as Zn, PPM		0.054	SM18TH 3111B	ZN	DAWNE01	10/12/2011	1124
T-Hard. as CaCO3,PPM		34.20	SM18TH 2340C	HARD	TANYA19	09/21/2011	900

Samples received past holding time for nitrates, BOD, color and MBAS.

DOMINION LABORATORY SERVICES

REPORT PRODUCED ON 10/18/2011

CERTIFICATE OF ANALYSIS TEST RESULTS BY SAMPLE

Location: NORTH ANNA

Submitter: GLENN BISHOP

System Laboratory Number: 392680
Description :OUTFALL 022S

Sample Date: 09/06/2011

Parameter	Result	Method	Test Code	Analyst	Date Analyzed	Time Analyzed
Nitrate as N, PPM	0.72	EPA 353.2	NO3	DONNA13	09/08/2011	1303

Samples received past holding time for nitrates, BOD, color and MBAS.

DOMINION LABORATORY SERVICES

REPORT PRODUCED ON 10/18/2011

CERTIFICATE OF ANALYSIS TEST RESULTS BY SAMPLE

Location: NORTH ANNA

Submitter: GLENN BISHOP

System Laboratory Number: 392682
Description :OUTFALL 024S

Sample Date: 09/06/2011

Parameter	Result	Method	Test Code	Analyst	Date Analyzed	Time Analyzed
Ammonia as N, PPM	0.02	SM18TH 4500NH3F	NH3	DAWNE01	09/30/2011	1632
BOD, PPM	< 3.00	SM 5210 B	BOD	HERBE31	09/09/2011	900
Boron as B, PPM	< 0.02	SM18TH 4500-B B	B	DONNA13	09/27/2011	1330
Bromide as Br, PPM	5.30	EPA 320.1	BR	HERBE31	09/28/2011	
COD, PPM	51.83	HACH 8000	COD	DONNA13	09/13/2011	1145
Color	120.	SM18TH 2120B	CLR	HERBE31	09/08/2011	1730
Fluoride as F, PPM	0.040	EPA 300	FIC	DAWNE01	09/30/2011	1452
MBAS as LAS, PPM	< 0.010	SM 5540C	SURF	HERBE31	09/08/2011	
NO3+NO2, PPM	0.11	EPA 353.2	NO3NO2	DONNA13	09/08/2011	1303
Oil and Grease, PPM	< 5.00	EPA 1664A	O&G	TANYA19	09/27/2011	930
Sulfate as SO4, PPM	2.10	EPA 300	SO4IC	DAWNE01	09/30/2011	1452
TK Nitrogen as N,PPM	1.01	EPA 351.2	TKN	DONNA13	09/15/2011	1234
TSS, PPM	1.3	SM18TH 2540D	TSS	TANYA19	09/12/2011	1030
Total Phos. as P,PPM	0.12	SM18TH 4500-P	TP	TANYA19	09/15/2011	1330
Aluminum as Al, PPM	0.27	SM18TH 3111D	AL	DAWNE01	10/12/2011	1616
Antimony as Sb, ppb	< 1.	SM18TH 3113B	SBPPB	STEVE72	10/10/2011	1048
Arsenic as As, ppb	< 3.	SM18TH 3113B	ASPPB	STEVE72	09/21/2011	1738
Barium as Ba, ppb	16.	SM18TH 3113B	BAPPB	STEVE72	10/11/2011	833
Beryllium as Be, ppb	< 0.2	SM18TH 3113B	BEPPB	STEVE72	10/10/2011	2152
Cadmium as Cd, ppb	< 0.3	SM18TH 3113B	CDPPB	STEVE72	10/10/2011	1601
Chromium as Cr, ppb	< 1.	SM18TH 3113B	CRPPB	STEVE72	09/15/2011	1021
Cobalt as Co, ppb	< 0.6	SM18TH 3113B	COPPB	STEVE72	10/10/2011	1855
Copper as Cu, ppb	9.	SM18TH 3113B	CUPPB	STEVE72	10/10/2011	1829
Iron as Fe, PPM	0.42	SM18TH 3111B	FE	DAWNE01	10/12/2011	1523
Lead as Pb, ppb	< 1.	SM18TH 3113B	PBPPB	STEVE72	10/10/2011	1431
Magnesium as Mg, PPM	0.87	SM18TH 3111B	MG	DAWNE01	10/12/2011	1253
Manganese as Mn, PPM	< 0.02	SM18TH 3111B	MN	DAWNE01	10/12/2011	1213
Mercury as Hg, ppb	< 0.2	SM18TH 3112B	HGPPB	STEVE72	09/15/2011	1015
Molybdenum as Mo,ppb	2.	SM18TH 3113B	MOPPB	STEVE72	10/06/2011	1222
Nickel as Ni, ppb	< 5.	SM18TH 3113B	NIPPB	STEVE72	10/10/2011	1951
Selenium as Se, ppb	< 3.	SM18TH 3113B	SEPPB	STEVE72	09/21/2011	1413
Silver as Ag, ppb	< 0.1	SM18TH 3113B	AGPPB	STEVE72	09/22/2011	841
Thallium as Tl, ppb	0.4	EPA 279.2	TLPPB	STEVE72	10/10/2011	1546
Tin as Sn, ppb	< 5.	SM18TH 3113B	SNPPB	STEVE72	10/06/2011	1002
Titanium as Ti, ppb	14.	EPA 283.2	TIPPB	STEVE72	10/11/2011	833
Zinc as Zn, PPM	0.123	SM18TH 3111B	ZN	DAWNE01	10/12/2011	1124
T-Hard. as CaCO3,PPM	30.78	SM18TH 2340C	HARD	TANYA19	09/21/2011	900

Samples received past holding time for nitrates, BOD, color and MBAS.

DOMINION LABORATORY SERVICES

REPORT PRODUCED ON 10/18/2011

CERTIFICATE OF ANALYSIS TEST RESULTS BY SAMPLE

Location: NORTH ANNA

Submitter: GLENN BISHOP

System Laboratory Number: 392682
Description :OUTFALL 024S

Sample Date: 09/06/2011

Parameter	Result	Method	Test Code	Analyst	Date Analyzed	Time Analyzed
Nitrate as N, PPM	0.13	EPA 353.2	NO3	DONNA13	09/08/2011	1303

Samples received past holding time for nitrates, BOD, color and MBAS.

DOMINION LABORATORY SERVICES
==========
REPORT PRODUCED ON 10/18/2011

CERTIFICATE OF ANALYSIS TEST RESULTS BY SAMPLE

Location: NORTH ANNA

Submitter: GLENN BISHOP

System Laboratory Number: 392683
Description :OUTFALL 025S

Sample Date: 09/06/2011

Parameter		Result	Method	Test Code	Analyst	Date Analyzed	Time Analyzed
Ammonia as N, PPM		0.02	SM18TH 4500NH3F	NH3	DAWNE01	09/30/2011	1632
Boron as B, PPM		0.02	SM18TH 4500-B B	B	DONNA13	09/27/2011	1330
COD, PPM		25.46	HACH 8000	COD	DONNA13	09/13/2011	1145
Fluoride as F, PPM		0.088	EPA 300	FIC	DAWNE01	09/30/2011	1452
NO3+NO2, PPM		1.31	EPA 353.2	NO3NO2	DONNA13	09/08/2011	1303
Oil and Grease, PPM	<	5.00	EPA 1664A	O&G	TANYA19	09/27/2011	930
Sulfate as SO4, PPM		44.31	EPA 300	SO4IC	DAWNE01	09/30/2011	1452
TK Nitrogen as N,PPM		0.36	EPA 351.2	TKN	DONNA13	09/15/2011	1234
TSS, PPM		34.6	SM18TH 2540D	TSS	TANYA19	09/12/2011	1030
Total Phos. as P,PPM		0.34	SM18TH 4500-P	TP	TANYA19	09/15/2011	1330
Aluminum as Al, PPM		0.61	SM18TH 3111D	AL	DAWNE01	10/12/2011	1616
Antimony as Sb, ppb	<	1.	SM18TH 3113B	SBPPB	STEVE72	10/10/2011	1048
Arsenic as As, ppb	<	3.	SM18TH 3113B	ASPPB	STEVE72	09/21/2011	1738
Barium as Ba, ppb		47.	SM18TH 3113B	BAPPB	STEVE72	10/11/2011	833
Beryllium as Be, ppb	<	0.2	SM18TH 3113B	BEPPB	STEVE72	10/10/2011	2152
Cadmium as Cd, ppb	<	0.3	SM18TH 3113B	CDPPB	STEVE72	10/10/2011	1601
Chromium as Cr, ppb		1.	SM18TH 3113B	CRPPB	STEVE72	09/15/2011	1021
Cobalt as Co, ppb	<	0.6	SM18TH 3113B	COPPB	STEVE72	10/10/2011	1855
Copper as Cu, ppb		6.	SM18TH 3113B	CUPPB	STEVE72	10/10/2011	1829
Iron as Fe, PPM		0.90	SM18TH 3111B	FE	DAWNE01	10/12/2011	1523
Lead as Pb, ppb	<	1.	SM18TH 3113B	PBPPB	STEVE72	10/10/2011	1431
Magnesium as Mg, PPM		3.41	SM18TH 3111B	MG	DAWNE01	10/12/2011	1253
Manganese as Mn, PPM		0.03	SM18TH 3111B	MN	DAWNE01	10/12/2011	1213
Mercury as Hg, ppb	<	0.2	SM18TH 3112B	HGPPB	STEVE72	09/15/2011	1015
Molybdenum as Mo,ppb		55.	SM18TH 3113B	MOPPB	STEVE72	10/06/2011	1222
Nickel as Ni, ppb	<	5.	SM18TH 3113B	NIPPB	STEVE72	10/10/2011	1951
Selenium as Se, ppb	<	3.	SM18TH 3113B	SEPPB	STEVE72	09/21/2011	1413
Silver as Ag, ppb	<	0.1	SM18TH 3113B	AGPPB	STEVE72	09/22/2011	841
Thallium as Tl, ppb		0.4	EPA 279.2	TLPPB	STEVE72	10/10/2011	1546
Tin as Sn, ppb	<	5.	SM18TH 3113B	SNPPB	STEVE72	10/06/2011	1002
Titanium as Ti, ppb		23.	EPA 283.2	TIPPB	STEVE72	10/11/2011	833
Zinc as Zn, PPM		0.076	SM18TH 3111B	ZN	DAWNE01	10/12/2011	1124
T-Hard. as CaCO3,PPM		68.40	SM18TH 2340C	HARD	TANYA19	09/21/2011	900
Nitrate as N, PPM		1.30	EPA 353.2	NO3	DONNA13	09/08/2011	1303
BOD, PPM		5.60	SM 5210 B	BOD	HERBE31	09/09/2011	900
MBAS as LAS, PPM	<	0.010	SM 5540 C	MBAS	HERBE31	09/08/2011	
Bromide as Br, PPM		5.90	EPA 320.1	BR	HERBE31	09/28/2011	

Samples received past holding time for nitrates, BOD, color and MBAS.

DOMINION LABORATORY SERVICES

REPORT PRODUCED ON 10/18/2011

CERTIFICATE OF ANALYSIS TEST RESULTS BY SAMPLE

Location: NORTH ANNA

Submitter: GLENN BISHOP

System Laboratory Number: 392683
Description :OUTFALL 025S

Sample Date: 09/06/2011

Parameter	Result	Method	Test Code	Analyst	Date Analyzed	Time Analyzed
Color, PCU	64.0	SM18TH 2120B	CLR	HERBE31	09/08/2011	1730

Samples received past holding time for nitrates, BOD, color and MBAS.

418825

Location: North Anna PS	Requested by: Glenn Bishop	Priority: 8	
Required Date: 60 days 11-7-11	Phone: 7-771-5375	Date Analysis Complete: 10/14/11	
Comment:	Sampled by: Randy Markey	Date Approved Released: 10/18/11	

Bottle Types: O/G=Oil and Grease, PT=Phenols Total, V=Volatiles, M=Metals, A=[Ammonia,TKN,TP,COD,NO_3/NO_2], BOD=Biological Oxygen Demand
TOC=Total Organic Carbon, TSS=[Total Suspended Solids,B,F,NO_3/NO_2,SO_4,~~TDS,Chloride~~]
ABN=Acid Base Neutrals, PP=Pesticide/PCBs

Preservatives: HCl=Hydrochloric acid, CS=Cu Sulfate, S=Sulfuric acid, N=Nitric acid, ZA=Zinc acetate, SH=Sodium Hydroxide

Tests Required 1= O/G, [Ammonia, TKN, TP, COD, NO_3/NO_2]
2= {TSS, B, F, NO_3/NO_2, *Nitrate N*, SO_4}
4= TR Metals Al,Ba,Co,Fe,Mg,Mo,Mn,Sn,Ti,Sb,As,Be,Cd,Cr,Cu,Pb,Hg,Ni,Se,Ag,Tl,Zn + Hardness

NOTE:

Consider:
Flow
pH
FAC
TRC
Temp

X - PLACE AN "X" IN THE BOX FOR SAMPLES TO BE SUBMITTED

System Lab Number	x	Sample ID	Sample Date	Sample Time	Comp	Grab	Cl_2 Screen [ABN,Vol]	Dechlor confirmed?	Project Code	O/G (HCl)	PT	V (HCl-N)	M	A (S)	BOD	TOC (HCl)	TSS	ABN	P/P	Test Required	Notes
382679	X	Outfall 014s	9-6-11	1055		x			CW Compl 9-9-11	1			1	1			1			1,2,4	
									Cons												

Relinquished by: (Signature) Jerry [illegible]	Date 9-8-11 Time 0835	Received by: (Signature) R Barnes	Date 9/8/11 Time 0835
Relinquished by: (Signature) R Barnes	Date 9/8/11 Time 1030	Received by: (Signature) [illegible]	Date 9/8/11 Time 1030

Dominion Resources
Laboratory Services
11202 Old Stage Road
Chester, VA 23836

coc CPM NA 014s.xlsx

418825

Location:	North Anna PS	Requested by:	Glenn Bishop	Priority:	5
Required Date: 60 days	11-7-11	Phone:	8-331-5575	Date Analysis Complete:	10/12/11
Comment:		Sampled by:	Randy Markey	Date Approved Released:	10/13/11

Bottle Types: O/G=Oil and Grease, PT=Phenols Total, V=Volatiles, M=Metals, A=[Ammonia,TKN,TP,COD,NO_3/NO_2], BOD=Biological Oxygen Demand
TOC=Total Organic Carbon, TSS=[Total Suspended Solids,B,F,NO_3/NO_2,SO_4,TDS,Chloride]
ABN=Acid Base Neutrals, PP=Pesticide/PCBs

Preservatives: HCl=Hydrochloric acid, CS=Cu Sulfate, S=Sulfuric acid, N=Nitric acid, ZA=Zinc acetate, SH=Sodium Hydroxide

Tests Required 1= O/G, [Ammonia, TKN, TP, COD, NO_3/NO_2]
2= [TSS, B, F, NO_3/NO_2, *Nitrate N*, SO_4]

4= TR Metals Al,Ba,Co,Fe,Mg,Mo,Mn,Sn,Ti,Sb,As,Be,Cd,Cr,Cu,Pb,Hg,Ni,Se,Ag,Tl,Zn + Hardness

NOTE:

Consider:
Flow
pH
FAC
TRC
Temp

X - PLACE AN "X" IN THE BOX FOR SAMPLES TO BE SUBMITTED

System Lab Number	x	Sample ID	Sample Date	Sample Time	Comp	Grab	Cl_2 Screen [ABN,Vol]	Declor confirmed?	Preservative / Chlorine Check			O/G	PT	V	M	A	BOD				TOC	TSS	ABN	P/P		Test Required	Notes
												HCl	CS,S	HCl	N	S					HCl						
392680	X	Outfall 022s	9-6-11	1025		x			CH 9-8-11			1			1	1						1				1,2,4	

Relinquished by: (Signature)	[signature]	Date 9-8-11	Time 0875	Received by: (Signature) R. Barnes	Date 9/8/11 Time 0835
Relinquished by: (Signature) R. Barnes		Date 9/8/11	Time 1030	Received by: (Signature) [signature]	Date 9/8/11 Time 1030

Dominion Resources
Laboratory Services
11202 Old Stage Road
Chester, VA 23836

coc CPM NA 022s.xlsx

4 18825

Location:	North Anna PS	Requested by:	Glenn Bishop	Priority:	8
Required Date:	60 days 10-7-11	Phone:	8-781-5375	Date Analysis Complete:	10/12/11
Comment:		Sampled by:	Randy MacKey	Date Approved Released:	10/18/11

Bottle Types: O/G=Oil and Grease, PT=Phenols Total, V=Volatiles, M=Metals, A=[Ammonia,TKN,TP,COD,NO_3/NO_2], BOD=Biological Oxygen Demand
TOC=Total Organic Carbon, TSS=[Total Suspended Solids,B,F,NO_3/NO_2,SO_4,TDS,Chloride]
ABN=Acid Base Neutrals, PP=Pesticide/PCBs

Preservatives: HCl=Hydrochloric acid, CS=Cu Sulfate, S=Sulfuric acid, N=Nitric acid, ZA=Zinc acetate, SH=Sodium Hydroxide

Tests Required 1= O/G, [Ammonia, TKN, TP, COD, NO_3/NO_2]
2= [TSS, B, F, NO_3/NO_2, Nitrate N, SO_4]

4= TR Metals Al,Ba,Co,Fe,Mg,Mo,Mn,Sn,Ti,Sb,As,Be,Cd,Cr,Cu,Pb,Hg,Ni,Se,Ag,Tl,Zn + Hardness

NOTE:

Consider:
Flow
pH
FAC
TRC
Temp

X - PLACE AN "X" IN THE BOX FOR SAMPLES TO BE SUBMITTED

System Lab Number	x	Sample ID	Sample Date	Sample Time	Comp	Grab	Cl_2 Screen [ABN,Vol]	Dechlor confirmed?	Project Calc	O/G	PT	V	M	A	BOD	TOC	TSS	ABN	P/P	Test Required	Notes
Preservative										HCl	CS,S	HCl	N	S		HCl					
2972682	X	Outfall 024s	9-6-11	0750		X				1			1	1			1			1,2,4	

Relinquished by: (Signature)	[signature]	Date 9-8-11	Time 0835	Received by: (Signature) R Barnes	Date 9/8/11 Time 0835
Relinquished by: (Signature) R Barnes		Date 9/8/11	Time 1030	Received by: (Signature) [signature]	Date 9-9-11 Time 1030

Dominion Resources
Laboratory Services
11202 Old Stage Road
Chester, VA 23836

coc CPM NA 024s.xlsx

418825

Location:	North Anna PS	Requested by:	Glenn Bishop	Priority:	8
Required Date:	60 days 11-7-11	Phone:	540-721-5775	Date Analysis Complete:	10/11/11
Comment:		Sampled by:	Randy Markey	Date Approved Released:	10/11/11

Bottle Types: O/G=Oil and Grease, PT=Phenols Total, V=Volatiles, M=Metals, A=[Ammonia,TKN,TP,COD,NO_3/NO_2], BOD=Biological Oxygen Demand
TOC=Total Organic Carbon, TSS=[Total Suspended Solids,B,F,NO_3/NO_2,SO_4,TDS,Chloride]
ABN=Acid Base Neutrals, PP=Pesticide/PCBs

Preservatives: HCl=Hydrochloric acid, CS=Cu Sulfate, S=Sulfuric acid, N=Nitric acid, ZA=Zinc acetate, SH=Sodium Hydroxide

Tests Required 1= O/G, [Ammonia, TKN, TP, COD, NO_3/NO_2]
2= [TSS, B, F, NO_3/NO_2, Nitrate N, SO_4]

NOTE:

4= TR Metals Al,Ba,Co,Fe,Mg,Mo,Mn,Sn,Ti,Sb,As,Be,Cd,Cr,Cu,Pb,Hg,Ni,Se,Ag,Tl,Zn + Hardness

Consider:
Flow
pH
FAC
TRC
Temp

X - PLACE AN "X" IN THE BOX FOR SAMPLES TO BE SUBMITTED

System Lab Number	x	Sample ID	Sample Date	Sample Time	Comp	Grab	Cl_2 Screen (ABN,Vol)	Dechlor confirmed?	Project Code	O/G	PT	V	M	A	BOD	TOC	TSS	ABN	P/P	Test Required	Notes
Preservative										HCl	CS,S	HCl	N	S		HCl					
392683	X	Outfall 025a	9-6-11	1040		x			~~Grab~~ Comp	1			1	1			1			1,2,4	

Relinquished by: (Signature)	[illegible]	Date 9-8-11	Time 0835	Received by: (Signature) R Banner	Date 9/8/11 Time 0835
Relinquished by: (Signature) R Banner		Date 9/8/11	Time 1030	Received by: (Signature) [illegible]	Date 9-8-11 Time 1030

Dominion Resources
Laboratory Services
11202 Old Stage Road
Chester, VA 23836

coc CPM NA 025s.xlsx

Dominion Laboratory Login Checklist

Station/Study: NORTH ANNA / STORM		WO#: 418825	
Thermometer Used: 61951674 or 61951693		Temp: 1.9 °C	
	Type of Ice: Wet	Blue	None
Chain of Custody Present	Yes	No	N/A
Chain of Custody Filled Out	Yes	No	N/A
Chain of Custody Relinquished	Yes	No	N/A
Sampler Name on COC	Yes	No	N/A
Samples Labels match COC	Yes	No	N/A
Includes date/time/ID/Analysis	Yes	No	N/A
All entries in Ink	Yes	No	N/A
Samples Arrived within Holding Time	Yes	No	N/A
Short Hold Time Analysis (<72hr)	Yes	No	N/A
Rush Turn Around Time Requested	Yes	No	N/A
Sufficient Volume	Yes	No	N/A
Correct Containers Used	Yes	No	N/A
Containers Used: (circle)	NH3	Solids	O&G
	TOC	OPO4	ABN
	IC	DRO	Phenol
	Hardness	Radioactivity	Volatiles
	Grain Size	Metals (Total or Dissolved)	
	Other:		
# of Bottles on COC correct	Yes	No	N/A
Filtered Volume received for Dissolved Tests	Yes	No	N/A
Custody Seal Intact	Yes	No	N/A
Date/Time Received: 9-8-2011 / 1030			
Received by: [illegible]			
Due Date on COC match worksheet	Yes	No	N/A
Tests Required on COC match worksheet	Yes	No	N/A
Verified by: TL		Date: 9/8/11	

Nitrate as N

Primary Laboratories, Inc.

7423 Lee Davis Road • Mechanicsville, VA 23111 • Telephone (804) 559-9004 • Fax (804) 559-9306

ANALYTICAL LABORATORY REPORT

28-Sep-11

Dominion Virginia Power
Attn: Glenn Bishop
4111 Castlewood Road
Richmond, Virginia 23234

Date Received: 8-Sep-11
Date Sampled: 6-Sep-11
Work Order No: 1109071-01
Client ID: **North Anna 014s** LSH 392679

Test Description	Final Result	Reporting Limit	Units of Measure	Method Numbers*	Date Analyzed	Tech. Initials
BOD**	<3.0	3.0	mg/L	5210 B	9-Sep-11 at 9:00	NA
MBAS**	<0.01	0.01	mg/L	5540C	8-Sep-11	HV
Bromide	4.0	0.1	mg/L	EPA 320.1	28-Sep-11	PB
Color**	20.0	5	PCU	2120 B	8-Sep-11 at 17:30	NA

*All methods are from Standard Methods 18th Edition, unless otherwise noted.
** Note: Samples received out of EPA-mandated holding time.

Signature: Parry Bragg Date: 9/28/11
Parry L. Bragg
Laboratory Manager

These analytical results are based upon materials provided by the client and are intended for the exclusive use of the client. These analytical results represent the best judgement of Primary Laboratories, Inc. Primary Laboratories, Inc. assumes no responsibility, express or implied, as to the interpretation of the analytical results contained in this report. This report is not to be reproduced except with the written approval of Primary Laboratories, Inc.

Location: North Anna	Requested by: Glenn Bishop	Priority:
Required Date: 30 days	Phone: (804) 271-5275	Date Analysis Complete:
Comment:	Sampled by: Randy Markey	Date Approved Released:

Bottle Types: Cn=Cyanide, FC=Fecals, EC = E coli, H_2S = Hydrogen sulfide, Asb = Asbestos, BOD=Biological Oxygen Demand
P/P=Pesticide / PCBs, TBT = Tributyltin, R = Radioactivity, Br = Bromide, Color, Sul = sulfide, Sur = Surfactants, DS = Dozen screen

Preservatives: HCl=Hydrochloric acid, CS=Cu Sulfate, S=Sulfuric acid, N=Nitric acid, ZA=Zinc acetate, SH=Sodium Hydroxide

Tests Required 1= BOD, [~~1,2,Diphenylhydrazine~~]

3= [Br, Color], Surfactants

71
110906~~05~~

X - PLACE AN "X" IN THE BOX FOR SAMPLES TO BE SUBMITTED

System Lab Number	x	Sample ID	Sample Date	Sample Time	Comp	Grab	Cl_2 Screen [Cn]	Oechlor confirmed?	Sulfide Screen [Cn]	Free Cl	FC	EC	H_2S	Asb	BOD	P/P	TBT	Nonyphenol	1,2,Diphenylhydrazine	Cr3, Cr6	Br, Color	Sul	Sur	DS	Test Required	Notes
										SH			ZA,SH									ZA,SH				
		Outfall North Anna 014s	7-6-11	1055		x									1						1		1		1,3	~~For 1,2 Diphenylhydrazine, use Method 625 at QL - 0.1 ppb~~

Relinquished by: (Signature) [signature]	Date 7-8-11 Time 0835	Received by: (Signature) R Burnett	Date 7/8/11 Time 0835
Relinquished by: (Signature) R Burnett	Date 7-8-11 Time 0950	Received by: (Signature) R Burnett	Date 7-8-11 Time 950

Primary Laboratories
7423 Lee Davis Road
Mechanicsville, VA 23111
804-559-9004

1.8°C

coc CPM NA 014s.xlsx

Primary Laboratories, Inc.

7423 Lee Davis Road • Mechanicsville, VA 23111 • Telephone (804) 559-9004 • Fax (804) 559-9306

ANALYTICAL LABORATORY REPORT

28-Sep-11

Dominion Virginia Power
Attn: Glenn Bishop
4111 Castlewood Road
Richmond, Virginia 23234

Date Received: 8-Sep-11
Date Sampled: 6-Sep-11
Work Order No: 1109072-01
Client ID: **North Anna 022s** LJH 392680

Test Description	Final Result	Reporting Limit	Units of Measure	Method Numbers*	Date Analyzed	Tech. Initials
BOD**	<3.0	3.0	mg/L	5210 B	9-Sep-11 at 9:00	NA
MBAS**	<0.01	0.01	mg/L	5540C	8-Sep-11	HV
Bromide	5.2	0.1	mg/L	EPA 320.1	28-Sep-11	PB
Color**	73.0	5.0	PCU	2120 B	8-Sep-11 at 17:30	NA

*All methods are from Standard Methods 18th Edition, unless otherwise noted.
** Note: Samples received out of EPA-mandated holding time.

Signature: Perry L. Bragg Date: 9/28/11
Perry L. Bragg
Laboratory Manager

These analytical results are based upon materials provided by the client and are intended for the exclusive use of the client. These analytical results represent the best judgement of Primary Laboratories, Inc. Primary Laboratories, Inc. assumes no responsibility, express or implied, as to the interpretation of the analytical results contained in this report. This report is not to be reproduced except with the written approval of Primary Laboratories, Inc.

Location: North Anna	Requested by: Glenn Bishop	Priority:	
Required Date: 30 days	Phone: (804) 271-5375	Date Analysis Complete:	
Comment:	Sampled by: Randy Morrey	Date Approved Released:	

Bottle Types: Cn=Cyanide, FC=Fecals, EC = E coli, H_2S = Hydrogen sulfide, Asb = Asbestos, BOD=Biological Oxygen Demand
P/P=Pesticide / PCBs, TBT = Tributyltin, R = Radioactivity, Br = Bromide, Color, Sul = sulfide, Sur = Surfactants, DS = Dissolved Solids

Preservatives: HCl=Hydrochloric acid, CS=Cu Sulfate, S=Sulfuric acid, N=Nitric acid, ZA=Zinc acetate, SH=Sodium Hydroxide

Tests Required 1= BOD, [1,2-Diphenylhydrazine]

3= [Br, Color], Surfactants

72
11 0 9 0 ~~7.4~~

X - PLACE AN "X" IN THE BOX FOR SAMPLES TO BE SUBMITTED

System Lab Number	x	Sample ID	Sample Date	Sample Time	Comp	Grab	Cl_2 Screen (Cn)	Dechlor conf limed?	Sulfide Screen (Cn)	Free Cn	FC	EC	H_2S	Asb	BOD	P/P	TBT	Nonylphenol	1,2 Diphenylhydrazine	Cr3, Cr6	Br, Color	Sul	Sur	DS	Test Required	Notes
Preservative										SH			ZA,SH									ZA,SH				
		Outfall				x									1						1		1		1,3	
		North Anna 022s	9-6-11	1025																						~~For 1,2 Diphenylhydrazine, use Method 626 at QL = 0.1 ppb~~

Relinquished by: (Signature) [illegible]	Date 9-6-11 Time 0815	Received by: (Signature) R Burnett	Date 9/8/11 Time 0835
Relinquished by: (Signature) R Burnett	Date 9/8/11 Time 0950	Received by: (Signature) R. Burnett	Date 9-8-11 Time 9:50

Primary Laboratories:
7423 Lee Davis Road
Mechanicsville, VA 23111
804-559-9004

1.8°C

coc CPM NA 022s.xlsx

Primary Laboratories, Inc.

7423 Lee Davis Road • Mechanicsville, VA 23111 • Telephone (804) 559-9004 • Fax (804) 559-9306

ANALYTICAL LABORATORY REPORT

28-Sep-11

Dominion Virginia Power
Attn: Glenn Bishop
4111 Castlewood Road
Richmond, Virginia 23234

Date Received: 8-Sep-11
Date Sampled: 6-Sep-11
Work Order No: 1109066-01
Client ID: **North Anna 024s** L4392L82

Test Description	Final Result	Reporting Limit	Units of Measure	Method Numbers*	Date Analyzed	Tech. Initials
BOD**	<3.0	3.0	mg/L	5210 B	9-Sep-11 at 9:00	NA
MBAS**	<0.01	0.01	mg/L	5540C	8-Sep-11	HV
Bromide	5.3	0.1	mg/L	EPA 320.1	28-Sep-11	PB
Color**	120.0	5.0	PCU	2120 B	8-Sep-11 at 17:30	NA

*All methods are from Standard Methods 18th Edition, unless otherwise noted.
** Note: Samples received out of EPA-mandated holding time.

Signature: Parry L. Bragg Date: 9/28/11
Parry L. Bragg
Laboratory Manager

These analytical results are based upon materials provided by the client and are intended for the exclusive use of the client. These analytical results represent the best judgement of Primary Laboratories, Inc. Primary Laboratories, Inc. assumes no responsibility, express or implied, as to the interpretation of the analytical results contained in this report. This report is not to be reproduced except with the written approval of Primary Laboratories, Inc.

Location: North Anna	Requested by: Glenn Bishop	Priority:
Required Date: 30 days	Phone: (804) 271-5313	Date Analysis Complete:
Comment:	Sampled by: Randy MacKenzie	Date Approved Released:

Bottle Types: Cn=Cyanide, FC=Fecals, EC = E coli, H_2S = Hydrogen sulfide, Asb = Asbestos, BOD=Biological Oxygen Demand
P/P=Pesticide / PCBs, TBT = Tributyltin, R = Radioactivity, Br = Bromide, Color, Sul = sulfide, Sur = Surfactants, DS = Dioxin screen

Preservatives: HCl=Hydrochloric acid, CS=Cu Sulfate, S=Sulfuric acid, N=Nitric acid, ZA=Zinc acetate, SH=Sodium Hydroxide

Tests Required 1= BOD, [1,2,Diphenylhydrazine]

3= [Br, Color], Surfactants

Non potable

X - PLACE AN "X" IN THE BOX FOR SAMPLES TO BE SUBMITTED

System Lab Number	x	Sample ID	Sample Date	Sample Time	Comp	Grab	Cl_2 Screen [Cn]	Dechlorinated?	Sulfide Screen [Cn]	Free Cn	FC	EC	H_2S	Asb	BOD	P/P	TBT	Nonylphenol	1,2,Diphenylhydrazine	Cr3, Cr6	Br, Color	Sul	Sur	DS	Test Required	Notes
Preservative										SH			ZA,SH									ZA,SH				
		Outfall North Anna 024s	9-6-11	0950		x									1						1		1		1,2,3	~~For 1,2 Diphenylhydrazine, use Method 626 at QL = 0.1 ppb~~

Relinquished by: (Signature) [illegible]	Date 9-6-11 Time 0835	Received by: (Signature) R Barnes	Date 9/6/11 Time 0835	Primary Laboratories 7423 Lee Davis Road Mechanicsville, VA 23111 804-559-9004
Relinquished by: (Signature) R Barnes	Date 9/6/11 Time 0950	Received by: (Signature) R Barnes	Date 9-6-11 Time 9:50	

1.8°C

coc CPM NA 024s.xlsx

Primary Laboratories, Inc.

7423 Lee Davis Road • Mechanicsville, VA 23111 • Telephone (804) 559-9004 • Fax (804) 559-9306

ANALYTICAL LABORATORY REPORT

28-Sep-11

Dominion Virginia Power
Attn: Glenn Bishop
4111 Castlewood Road
Richmond, Virginia 23234

Date Received: 8-Sep-11
Date Sampled: 6-Sep-11
Work Order No: 1109068-01
Client ID: **North Anna 025s** LJH 392673

Test Description	Final Result	Reporting Limit	Units of Measure	Method Numbers*	Date Analyzed	Tech. Initials
BOD**	5.6	2.0	mg/L	5210 B	9-Sep-11 at 9:00	NA
MBAS**	<0.01	0.01	mg/L	5540C	8-Sep-11	HV
Bromide	5.9	0.1	mg/L	EPA 320.1	28-Sep-11	PB
Color**	64.0	5.0	PCU	2120 B	8-Sep-11 at 17:30	NA

*All methods are from Standard Methods 18th Edition, unless otherwise noted.
** Note: Samples received out of EPA-mandated holding time.

Signature: Larry Bragg Date: 9/28/11
Larry L. Bragg
Laboratory Manager

These analytical results are based upon materials provided by the client and are intended for the exclusive use of the client. These analytical results represent the best judgement of Primary Laboratories, Inc. Primary Laboratories, Inc. assumes no responsibility, express or implied, as to the interpretation of the analytical results contained in this report. This report is not to be reproduced except with the written approval of Primary Laboratories, Inc.

Location: North Anna	Requested by: Glenn Bishop	Priority:	
Required Date: 30 days	Phone: (804) 271-5375	Date Analysis Complete:	
Comment:	Sampled by: Randy Morkin	Date Approved Released:	

Bottle Types: Cn=Cyanide, FC=Fecals, EC = E coli, H_2S = Hydrogen sulfide, Asb = Asbestos, BOD=Biological Oxygen Demand
P/P=Pesticide / PCBs, TBT = Tributyltin, R = Radioactivity, Br = Bromide, Color, Sul = sulfide, Sur = Surfactants, DS = Dioxin screen

Preservatives: HCl=Hydrochloric acid, CS=Cu Sulfate, S=Sulfuric acid, N=Nitric acid, ZA=Zinc acetate, SH=Sodium Hydroxide

Tests Required 1= BOD, [~~1,2,Diphenylhydrazine~~]

3= [Br, Color], Surfactants

11 of 6 8

X - PLACE AN "X" IN THE BOX FOR SAMPLES TO BE SUBMITTED

System Lab Number	x	Sample ID	Sample Date	Sample Time	Comp	Grab	Cl_2 Screen [Cn]	Dechlor conf limed?	Sulfide Screen [Cn]	Free Cn	FC	EC	H_2S	Asb	BOD	P/P	TBT	Nonylphenol	1,2,Diphenylhydrazine	Cr3, Cr6	Br, Color	Sul	Sur	DS	Test Required	Notes
Preservative										SH			ZA,SH									ZA,SH				
		Outall				x									1						1		1		1,3	
		North Anna 025s	9-6-11	10:10																						~~For 1,2 Diphenylhydrazine, use Method 526 at QL = 0.1 ppb~~

Relinquished by: (Signature) [signature]	Date 9-8-11 Time 0835	Received by: (Signature) R Burnett	Date 9/8/11 Time 0835
Relinquished by: (Signature) R Burnett	Date 9/8/11 Time 0950	Received by: (Signature) R Burnett	Date 9-8-11 Time 9:50

Primary Laboratories
7423 Lee Davis Road
Mechanicsville, VA 23111
804-559-9004

1.8°C

coc CPM NA 025s.xlsx

Attachment E

Site Drainage Maps

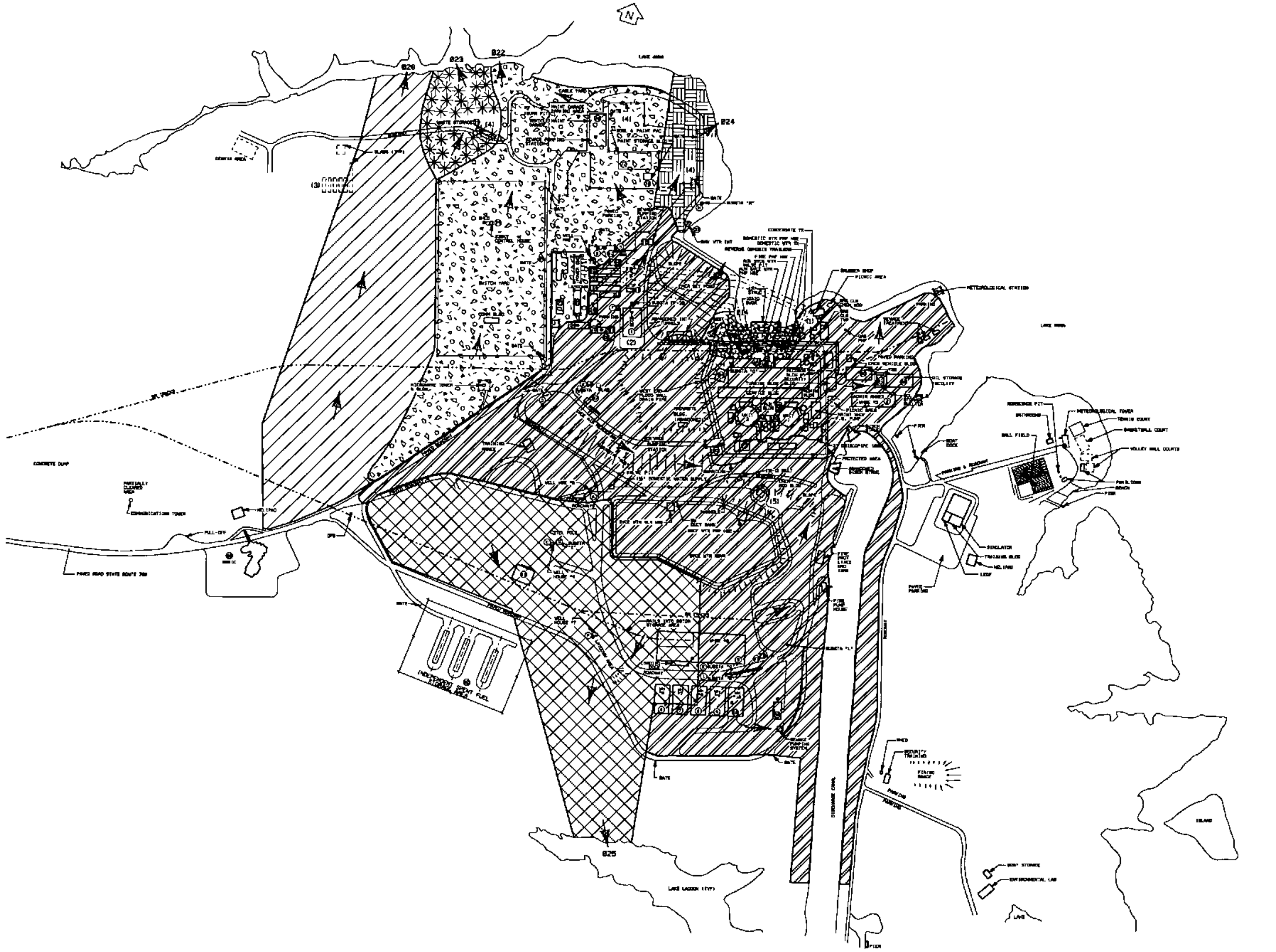

CHEMICAL / MATERIAL STORAGE		
STORAGE TANK TYPE	STORAGE CAPACITY (GALLONS)	SECONDARY CONTAINMENT (GALLONS)
SODIUM HYPOCHLORITE MAP KEY (1)	330 GALLON TOTE	TOTE SETS ON SECONDARY CONTAINMENT AND UNDER A CANOPY. TOTES ARE REPLACED AS NEEDED.
ACTI-BROM 1318 MAP KEY (1)	400 GALLON TOTE	TOTE SETS ON SECONDARY CONTAINMENT AND UNDER A CANOPY. TOTES ARE REPLACED AS NEEDED.
SAND (MAP KEY (2)	VARIES	STORED UNDER ROOF WITH THREE WALL AND A TARP OVER THE FRONT. UNLOADED IN FRONT OF THE BAY VIA DUMP-TRUCK. RESIDUE IS SWEPT INTO A PILE.
SALT MAP KEY (2)	VARIES	STORED UNDER ROOF WITH THREE WALL AND A TARP OVER THE FRONT. UNLOADED IN FRONT OF THE BAY VIA DUMP-TRUCK. RESIDUE IS SWEPT INTO A PILE.
LAYDOWN AREA MAP KEY (3)	VARIES	GRADED FLAT.
GENERAL REFUSE MAP KEY (4)	VARIOUS SIZE CONTAINERS	SMALLER 'TRASH CANS' ARE EQUIPPED WITH LIDS. LARGER DUMPSTERS ARE STRATEGICALLY POSITIONED IN AREAS THAT MINIMIZE SHEET-FLOW TRANSPORT TO STORM WATER CONVEYANCES.

CHEMICAL CONTAINING EQUIPMENT		
STORAGE TANK TYPE	STORAGE CAPACITY (GALLONS)	STRUCTURAL BMPs SECONDARY CONTAINMENT (GALLONS)
BEARING COOLING TOWER: - H130 - BIOCIDE - ACTI-BROM 1318 - SODIUM HYPOCHLORITE - DIANODIC DN2472 MAP KEY (1)	25,000 GPM	CONCRETE BASIN.

CHEMICAL & MATERIAL UNLOADING & TRANSFER FACILITIES		
UNLOADING / TRANSFER FACILITY NAME, NUMBER	SPILL POTENTIAL (SOURCE)	STRUCTURAL BMPs SECONDARY CONTAINMENT (GALLONS)
H-130 BIOCIDE MAP KEY (5)	1200 GALLON TANKER TRUCK LOADS	FACILITY PERSONNEL ARE REQUIRED TO BE PRESENT DURING TRANSFER OPERATIONS. CATCH PANS ARE USED UNDER LINE CONNECTIONS.
H901G MAP KEY (5)	500 LB BAGS OR 50 LB BUCKETS	DELIVERED IN BAGS AND UNLOADED INSIDE THE BUILDING.
3D TRASAR 3DT177 (CORROSION INHIBITOR) MAP KEY (5)	200 GALLON TRUCK DELIVERIES	FACILITY PERSONNEL ARE REQUIRED TO BE PRESENT DURING TRANSFER OPERATIONS. CATCH PANS ARE USED UNDER LINE CONNECTIONS.
3D TRASAR 3DT180 (CORROSION INHIBITOR) MAP KEY (5)	200 GALLON TRUCK DELIVERIES	FACILITY PERSONNEL ARE REQUIRED TO BE PRESENT DURING TRANSFER OPERATIONS. CATCH PANS ARE USED UNDER LINE CONNECTIONS.

SYMBOLS AND LEGEND

- 014 OUTFALL
- 022 OUTFALL
- 023 OUTFALL
- 024 OUTFALL
- 025 OUTFALL
- 026 OUTFALL
- PROCESS / WASTE WATER
- DRAINAGE PATH

Dominion

NUCLEAR ENGINEERING
RICHMOND, VIRGINIA

SWPPP SITE DRAINAGE
NORTH ANNA POWER STATION

REVISION DESCRIPTION (SIGNATURES ON FILE)	CAD NO: NADRAIN621.DGN	
REVISED 4-19-10	DRAWING NO: NA-0-SP-STA-621	REV 2
DSGN ESM	SCALE: NONE UNLESS OTHERWISE NOTED	SH 1 OF 1

PC=MF1 & MP1

PRIOR TO USING FOR DESIGN WORK CHECK OMIS FOR WORK PENDING

DRAWING NO. 11715-FB-1A REV. 35

MATCH LINE FB-18

PLAN

PART-PLAN TUNNEL DRAINAGE

27-27

DETAIL "B"

15-15

PART PLAN

PLAN

PART PLAN "A"

NOTES:

1. SCALE: 1"=30'-0" EXCEPT AS NOTED.
2. ALL PIPE ELEVATIONS GIVEN ARE INVERT ELEVATIONS.
3. PIPING NOT DIMENSIONED TO BE LOCATED IN FIELD.
4. BLASTING OF ROCK FOR PIPE & MH INSTALLATION TO BE COMPLETED BEFORE POURING CONCRETE.
5. TOP OF GRATING COVER:

EL. 282.08'	IB NO 8
EL. 285.83'	MH NO 25
EL. 267.30'	MH NO 66
EL. 267.49'	MH NO 72
EL. 267.47'	MH NO 71
EL. 267.58'	MH NO 74 & IB NO 19, 20
EL. 257.91'	MH NO 73
EL. 266.33'	MH NO 67
EL. 258.42'	MH NO 26
EL. 258.48'	MH NO 70
EL. 258.49'	MH NO 29A
EL. 258.58'	MH NO 22, 23, 25, 27, 29, 30
EL. 258.08'	MH NO 36
EL. 256.61'	IB NO 3
EL. 260.64'	MH NO 76
EL. 260.95'	IB NO 10
EL. 260.69'	MH NO 37
EL. 260.75'	MH NO 24,28,31 & IB NO 2,4,7
EL. 260.88'	IB NO 13
EL. 260.92'	IB NO 21
EL. 269.86'	IB NO 8
EL. 269.19'	MH NO 35
EL. 264.22'	MH NO 69
EL. 269.49'	IB NO 15
EL. 269.65'	MH NO 68
EL. 269.83'	MH NO 1,3,6,9,10,13 & CB NO 1 & IB NO 5,16
EL. 269.89'	IB NO 14
EL. 270.17'	MH NO 2,4,7,11,15,17,20,21 & CB NO 3,4
EL. 276.26'	IB NO 17
EL. 278.33'	IB NO 18 & CB NO 5A
EL. (BY FIELD)	MH NO 8,11,12,16,18,32,33 & CB NO 2,5 IB NO 18,6

6. YARD STORM & SANITARY SYSTEM BMS 86
7. FOR LOCATION AND DETAILS OF BURIED SHORING WHICH IS ABANDONED-IN-PLACE IN THE VICINITY OF THE SERVICE WATER LINES AND ELECTRICAL DUCTS IN THE UNIT 1 ALLEYWAY, SEE SHORING DRAWINGS IN DCP 91-889. FOR LOCATION AND DETAILS OF BURIED SHORING WHICH IS ABANDONED-IN-PLACE IN THE VICINITY OF THE AUXILIARY SERVICE WATER LINES, SEE SHORING DRAWINGS IN DCP 91-811. FOR LOCATION AND DETAILS OF BURIED SHORING WHICH IS ABANDONED IN PLACE IN THE VICINITY OF THE SERVICE WATER LINES AND STORM DRAINS IN THE UNIT 2 ALLEYWAY, SEE SHORING DRAWINGS IN DCP 91-818.

REFERENCE DWGS:

PLOT PLAN	FY-1A
DETAIL, SH-2 RAILROAD	FY-6G
YARD STORM SEWERS	12188-FB-1A
FINISH GRADING ROADS & PARKING AREAS SH-3	FY-4A
GRADING PLAN & PROFILE-SERV WTR LINES	12188-FC-1K
SUBSURFACE DRAINAGE-PLAN & PROFILE	12188-FY-12F

LEGEND:

S & W STD MB 3A & B SUPERSEDED BY STD MEP-1881 & STD-MEB-1881-2

———	SAN SEWER
—FD—	SAW SEWER
—/—/—	CONTAMINATED DRAIN
T OF P	TOP OF PAVEMENT
HPP	HIGH POINT OF PAVEMENT
FD	FLOOR DRAIN
RD	ROOF DRAIN
FD	FLOOR DRAIN
IS	INLET STRUCTURE
T	TOP

Dominion

NUCLEAR ENGINEERING
RICHMOND, VIRGINIA

YARD
STORM & SANITARY SEWER SH-1
NORTH ANNA POWER STATION

REVISION DESCRIPTION (SIGNATURES ON FILE): REVISED PER DCP 87-188/DCR 2888-8591 THIS DWG SUPERSEDES REV 34

CAD NO: N188IA1.DGN

DRAWING NO: 11715-FB-1A REV 35

DSGN ANN SCALE: NONE UNLESS OTHERWISE NOTED SH 1 OF 1

PRIOR TO USING FOR DESIGN WORK CHECK DHIS FOR WORK PENDING

sdn=015
08-AUG-2008 10:38
N188IA1.DGN

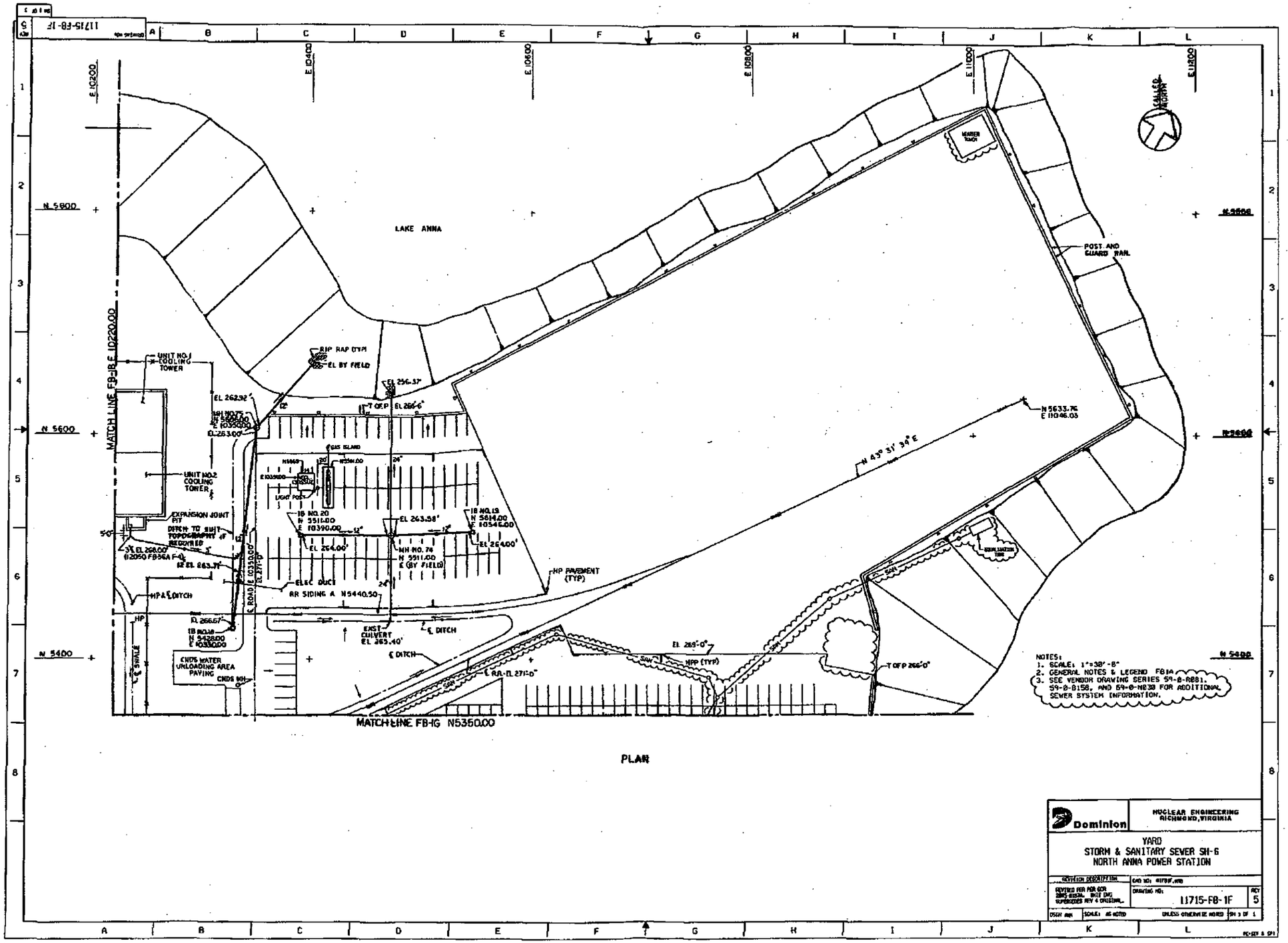

NOTES:
1. SCALE: 1"=38'-8"
2. GENERAL NOTES & LEGEND FB1A
3. SEE VENDOR DRAWING SERIES 59-8-R881, 59-8-B158, AND 59-0-N830 FOR ADDITIONAL SEWER SYSTEM INFORMATION.

PLAN

Dominion

NUCLEAR ENGINEERING
RICHMOND, VIRGINIA

YARD
STORM & SANITARY SEWER SH-6
NORTH ANNA POWER STATION

REVISION DESCRIPTION: REVISED PER PER OCR 2005-0103A. ONLY DWG SUPERSEDES REV 4 ORIGINAL.

CAD NO: 11715F.MPB

DRAWING NO: 11715-FB-1F

REV 5

DSGN ANN | SCALE: AS NOTED | UNLESS OTHERWISE NOTED | SH 3 OF 1

PRIOR TO USING FOR DESIGN WORK CHECK DWG FOR WORK PENDING

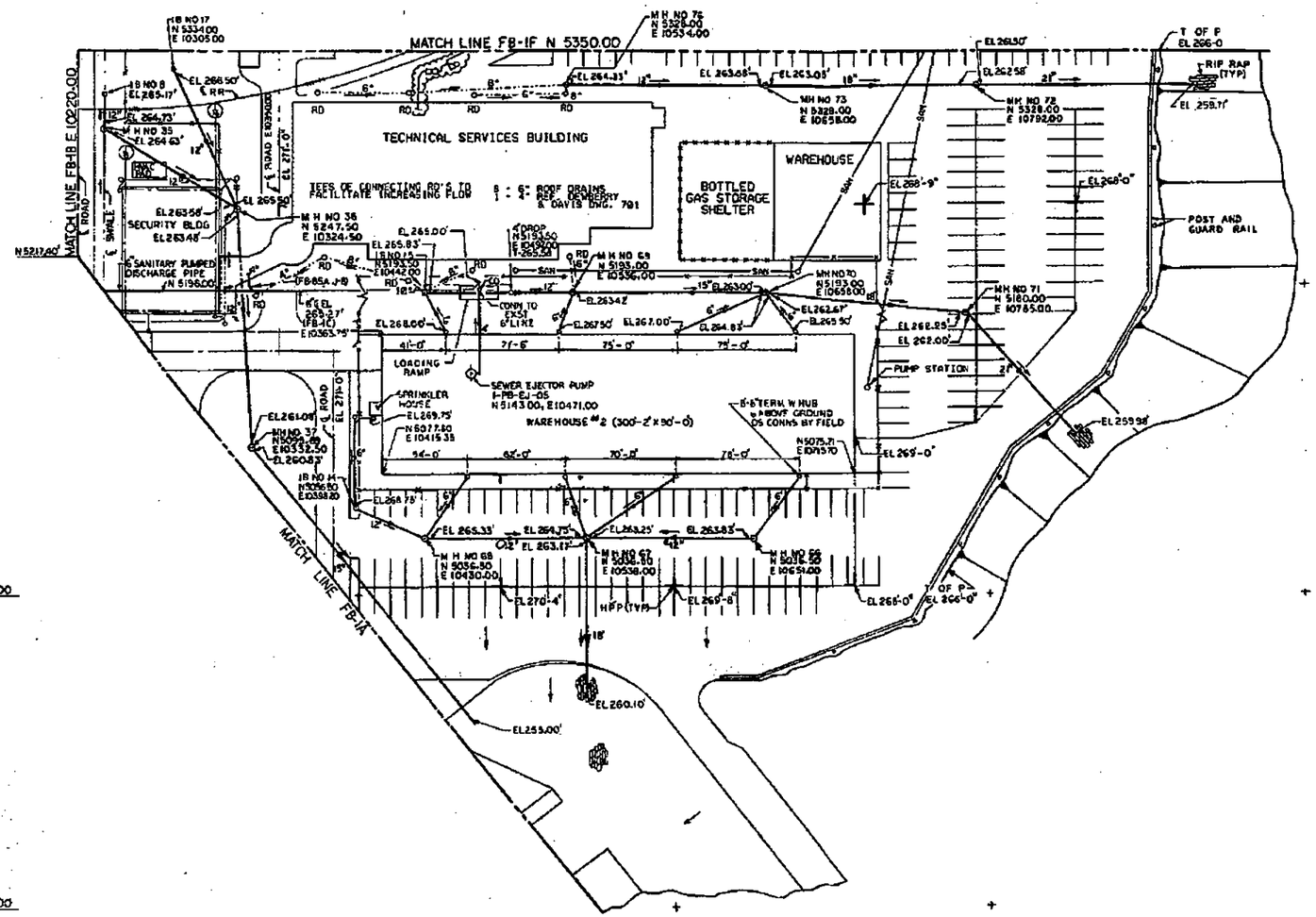

PLAN

NOTES:
1. SCALE: 1"=30'-0"
2. GENERAL NOTES & LEGEND FB1A
3. FINISHED GRADING, ROADS & PARKING AREAS SH-3 FY-4H
4. SEE VENDOR DRAWING SERIES 59-0-R881, 59-0-B158, AND 59-0-N938 FOR ADDITIONAL SEWER SYSTEM INFORMATION.

Dominion — NUCLEAR ENGINEERING RICHMOND, VIRGINIA

YARD
STORM & SANITARY SEWER SH-7
NORTH ANNA POWER STATION

DRAWING NO: 11715-FB-1G REV 7

PRIOR TO USING FOR DESIGN WORK CHECK DMIS FOR WORK PENDING

Attachment F

Sections 4, 5, and 6 of the Stormwater Pollution Prevention Plan (SWPPP)

4.0 POTENTIAL POLLUTANT SOURCES

VA0052451, Part I, F.1.2. Facility-Specific Storm Water Management Conditions (SWPPP Cross Reference #4)
VA0052451, Part I, F.3.2. Description of Potential Pollutant Sources. (SWPPP Cross Reference #12)

A SWPPP evaluation and associated SPCC Plan identified the following areas and equipment as potentials to impact storm water runoff. The likelihood is low and is primarily associated with storm water drainage areas and equipment / operations within those drainage areas. Please refer to Appendix C for general equipment locations, drainage patterns, and directions relevant to each storm water outfall.

The following areas where evaluated on whether storm water comes into direct contact with the material identified and whether the runoff has Best Management Practices (BMPs) to minimize direct discharges from Storm Water Outfalls.

4.1 SUMMARY OF POTENTIAL POLLUTANT SOURCES

VA0052451, Part I, F.3.2.(e) Risk Identification and Summary of Potential Pollutant Sources (SWPPP Cross Reference #16)

Facility Area	Activity	Pollutant(s) or Pollutant Parameter(s)
Bearing Cooling Tower: - H130 – Biocide - Acti Brom 1318 - Sodium Hyper chlorite - Dianodic DN2472 Corrosion Inhibitor	Unloading / Storage	POLLUTANT: Chemicals DIRECT EXPOSURE: No POTENTIAL TO DISCHARGE: Low
Chemical Addition Building: - H901G - H-130 Biocide - 3D Trasar 3DT177 - 3D Trasar 3DT180	Unloading	POLLUTANT: Chemicals DIRECT EXPOSURE: No POTENTIAL TO DISCHARGE: Low
Bulk Petroleum Storage Facility	Unloading / Storage	POLLUTANT: Petroleum DIRECT EXPOSURE: No POTENTIAL TO DISCHARGE: Low
Salt Storage	Unloading / Storage	POLLUTANT: Salt DIRECT EXPOSURE: No POTENTIAL TO DISCHARGE: Low
Laydown Areas	Storage	POLLUTANT: Metals DIRECT EXPOSURE: Yes POTENTIAL TO DISCHARGE: Mid
General Refuse Containers	Unloading / Storage	POLLUTANT: Various Pollutants DIRECT EXPOSURE: Yes POTENTIAL TO DISCHARGE: Mid
		POLLUTANT: DIRECT EXPOSURE: POTENTIAL TO DISCHARGE:

		POLLUTANT: DIRECT EXPOSURE: POTENTIAL TO DISCHARGE:
		POLLUTANT: DIRECT EXPOSURE: POTENTIAL TO DISCHARGE:
		POLLUTANT: DIRECT EXPOSURE: POTENTIAL TO DISCHARGE:
		POLLUTANT: DIRECT EXPOSURE: POTENTIAL TO DISCHARGE:

4.2 EPCRA § 313 Potential

VA0052451, Part I, F.3.4.e. Special Pollution Prevention Plan Requirements (SWPPP Cross Reference #26)

Toxic Release Inventory (TRI) Applicability and Reporting as it relates to North Anna Power Plant

As stated in 40 CFR 372.22, a facility must meet all 3 of the established threshold criteria before being subject to the TRI requirements. One of the 3 criteria includes SIC Code 4911 of which North Anna can best be classified. *But* 40 CFR 372.22 further states that SIC Code 4911 must produce electricity from coal and/or oil combustion. Therefore, North Anna does not meet all 3 of the threshold requirements and is not subject to EPCRA 313 (i.e., TRI).

3 threshold criteria needed to be met to be subject to TRI:

- 10 or more full-time employees (>20,000 hrs/year), including contractors
- Facility under a covered SIC code to include: 20 - 39, 10 (except 1011, 1081, 1094), 12 (except 1241), 4911 (with coal and/or oil combustion), 4931 (with coal and/or oil combustion), 4939 (with coal and/or oil combustion), 4953 (RCRA facilities only), 7389 (contracted solvent recovery), 5169, 5171
- MPOU (Manufactured, Processed, and Otherwise Used) Criteria (Note: Combustion is viewed as coincidentally manufacturing)
  - Manufactured or Processed a TRI chemical >25,000 lbs or Otherwise Used a TRI chemical >10,000 lbs.
  - Manufactured or Processed or Otherwise Used a Persistent, Bio-accumulative, Toxic chemical >100 lbs.
  - Manufactured or Processed or Otherwise Used a Persistent, Bio-accumulative, Toxic chemical >10 lbs.

EPCRA § 313 Potential Spills or Leaks That Can Impact Storm Water and Drainage Points		
Equipment or Unloading / Transfer Area	**Spill Likelihood and Predicted Quantity**	**Drainage Point**

4.3 Site Bulk Chemicals/ Materials

VA0052451, Part I, F.3.2.(b) Inventory of Exposed Materials. (SWPPP Cross Reference #13)

Chemical / Material Storage		
Storage Tank Type	**Storage Capacity (Gallons)**	**Secondary Containment (Gallons)**
Sodium Hypo chlorite **Map Key (1)**	330 Gallon Tote	Tote sets on Secondary Containment and under a canopy. Totes are replaced as needed.
Acti – Brom 1318 **Map Key (1)**	400 Gallon Tote	Tote sets on Secondary Containment and under a canopy. Totes are replaced as needed.
Sand **Map Key (2)**	Varies	Stored under roof with three walls and a tarp over the front. Unloaded in front of the bay via dump-truck, residue is swept into the pile.
Salt **Map Key (2)**	Varies	Stored under roof with three walls and a tarp over the front. Unloaded in front of the bay via dump-truck, residue is swept into the pile.
Laydown Area **Map Key (3)**	Varies	Graded Flat.
General Refuse **Map Key (4)**	Various Size Containers	Smaller "Trash Cans" are equipped with lids; larger dumpsters are strategically positioned in areas that minimize sheet-flow transport to storm water conveyances.
Dianodic DN2472 **Map Key (1)**	300 Gallon Tote	Tote sets on Secondary Containment and under a canopy. Totes are replaced as needed.

Chemical Containing Equipment		
Storage Tank Type	**Storage Capacity (Gallons)**	**Structural BMPs Secondary Containment (Gallons)**
Bearing Cooling Tower: - H130 – Biocide - Acti Brom 1318 - Sodium Hypo chlorite - Dianodic DN2472 **Map Key (1)**	25,000 GPM	Concrete Basin.

Chemical & Material Unloading & Transfer Facilities		
Unloading/Transfer Facility Name, Number	**Spill Potential (Source)**	**Structural BMPs Secondary Containment (Gallons)**
H-130 Biocide **Map Key (5)**	1,200 Gallon Tanker Truck Loads	Facility Personnel are required to be present during transfer operations. Catch pans are used under line connections.
H901G **Map Key(5)**	500 lb bags or 50lbs buckets	Delivered in bags and unloaded inside the building.
3D Trasar 3DT177 (Corrosion Inhibitor) **Map Key (5)**	200 Gallon Truck Deliveries	Facility Personnel are required to be present during transfer operations. Catch pans are used under line connections.
3D Trasar 3DT180 (Corrosion Inhibitor) **Map Key (5)**	200 Gallon Truck Deliveries	Facility Personnel are required to be present during transfer operations. Catch pans are used under line connections.

4.4 Site Bulk Oil

The Station's petroleum storage and handling equipment is managed in accordance with the applicable SPCC regulations. For specifics on storage, unloading and relevant secondary containment, please refer to the Station's SPCC/VA ODCP Plan, which is in a separate plan and available upon request.

4.5 Sediment & Erosion

VA0052451, Part I, F.1.2.(g) Sediment and Erosion Control. (SWPPP Cross Reference #23)

This Section describes the both routine and construction project run-off management.

4.5.1 Sediment and Erosion Control

VA0083402, PART I, D. 3. b. (6)(b)(ii): Structural BMPs: i.- Sediment and Erosion Control: (SWPPP Cross Reference #11)
VA0052451, Part I, F.3.3.(h) Management of Runoff (SWPPP Cross Reference #24)

The Station utilizes curbs, concrete ditches, rocks, silt fence and grates/inlets to control storm water runoff. Approximately 35% of the property is impervious surfaces such as roof tops and paved parking lots and roads. The other 65% are vegetated woodlands, grassy areas, ponds, and graveled areas. No evidence of serve erosion is currently present. Silt fence is utilized around the base of earthen material stockpiles. Corrective Action: Issues noted by station personnel are entered into the Station's Corrective Action System (CAS), where the item can be tracked.

4.5.2 Construction Erosion & Sediment Control

VA0052451, Part I, F.1.3.a.2. Measures That Require Construction. (SWPPP Cross Reference # 8)

In the event of construction activities, Appendix H is reserved for the Construction Project's Erosion Control and Sediment Plan. Such plans are required for Construction Storm Water Permits and developed with a specific focus on site topography, drainage patterns, soils, ground cover, and adjacent runoff areas.

5.0 STORM WATER CONTROLS

VA0052451, Part I, F.3.3. Measures and Controls. (SWPPP Cross Reference #17)

Storm water management controls appropriate for the Station can be summarized as follows:

UNIT OR AREA NAME	APPROPRIATE STORM WATER MANAGEMENT CONTROLS
Switchyard Area	Silt Fence, Concrete Ditches, Gravel, Bermed Containment
Main Station Area	Concrete Ditches, Drop Inlets, Concrete Retention Boxes, Rip-rap
Discharge Canal	Rip-Rap, Vegetation
ISFSI	Retention Pond, Gravel, Rip-rap
Maintenance / Laydown Area	Rip-rap, Gravel, Flat Grade Surface, Silt Fence

5.1 Structural BMPs

(SWPPP Cross Reference #)

Refer to Section 4.3 & 4.4 for structural BMPs in place at this Station.

5.2 Non-Structural BMPs

The Station has Operating Procedures (OP) that are related to storm water contact management. They reduce the potential for storm water contact due to equipment failure or operational losses. The associated OPs are listed in section 5.2.1:

5.2.1 Employee Training

VA0052451, Part I, F.1.2. (3) Employee Training. (SWPPP Cross Reference #7)
VA0052451, Part I, F.3.3.(e) Employee Training (SWPPP Cross Reference #21)

The positions noted in the Pollution Prevention Team with (2) are responsible for providing the storm water training. The Station has the following training that encompasses storm water management:

- New Employee Plant Access Training (PAT)
- Inspections
- Hazard Communication Program
- Annual Storm Water Pollution Prevention

The following table represents the Operational Procedures (OP) associated with storm water and used as training. Copies of the OPs are maintained in the Station's files and available upon request.

OP Number	Operating Procedure Name
VPAP – 2202	Control of Chemical & Hazardous Substances
VPAP - 2203	Oil Spill Prevention Control, And Countermeasures (SPCC) Plan
1-PT-9.3	Erosion Control Inspection – Station Site
0-AP-23	Oil or Hazardous Substance Spill Response
0-OP-53.4	Draining of 1-DB-TK-2A and 1-DB-TK-2B 300 Gallon Fuel Oil Drain Collection Tanks
1-ICP-SW-F-117	Supply Header Number 1 SW Discharge Flow Calibration (1-SW-F-117)
2-ICP-SW-F-217	Supply Header Number 2 SW Discharge Flow Calibration (2-SW-F-217)
1-OP-41.12	Waste Oil Collection System
0-GOP-12.4	Pumping Down SW Bladder Tank
0-GOP-53.0	Lube Oil and Fuel Oil Storage Tank Weekly Checks
0-MOP-49.08	Removing No.1 Supply (A) and No.4 Return (A) Headers from Service and Returning to Service
0-MOP-49.09	Removing No.2 Supply (B) and No.3 Return (B) Headers from Service and Returning to Service
0-OP-22.17	Discharging SW to Lake Anna via the Liquid Waste System
1/2-OP-7.8	Refueling Water Chemical Addition Tank
CH-32.926	BC Tower Chemical Addition System
CH-32.928	BC Tower Chemical Addition System: Chemical Tote Change-out and Pump Venting
CH-32.940	SW System: Aquashade Addition
0-MOP-53.30	Filling and Draining 1-EG-TK-2A EDG Storage Tank
0-MOP-53.31	Filling and Draining 1-EG-TK-2B EDG Storage Tank
0-OP-41.7	Transfer of Used Oil to Disposal Truck and Receipt of New Oil From a Tanker Truck
1-OP-53.1	EDG Fuel Oil Storage And Transfer System
1-OP-53.3	AGFOS and Transfer System
CH-32.933	Service Water System – Adding Chemicals to Chemical Addition Tanks
CH-32.939	Service Water Chemical Addition System ; Operation
CY-AA-CTL-510	Chemical Control

Material Safety Data Sheets (MSDS) are also utilized as part of training to ensure that employees understand the nature of materials that could cause equipment leaks. Refer to Station's files for copies of the MSDS.

5.2.2 Good Housekeeping

(SWPPP Cross Reference #)

For details on the Sector Specific Good Housekeeping, please refer to Section 6.0 of this plan.

5.2.3 Minimizing Exposure

(SWPPP Cross Reference #)

The Station minimizes exposure by use of housekeeping procedures, structural & non-structural BMPs.

5.2.4 Routine Facility Inspections

(SWPPP Cross Reference #)

Routine facility inspections are comprehensive in scope. Refer to Appendix E. The inspections include:

- Storm Water: Quarterly Inspection and Annual Evaluation
- SPCC Plan Inspections

5.2.5 Spill Prevention and Response Procedures

(SWPPP Cross Reference #)

For petroleum spills, please refer to the SPCC/VA OCDP Plan, which is under separate cover and all other spills should reference the Facility's Procedures 0-AP-23.

5.3 BMP Maintenance

VA0052451, Part I, F.3.3. (b) Preventive Maintenance. (SWPPP Cross Reference #18)
VA0052451, Part I, F.3.3.(c) Spill Prevention and Response Procedures. (SWPPP Cross Reference #19)

The Facility inspects the BMPs in accordance with applicable Station Procedure listed in the above table in Section 5.2.1.

5.4 Existing BMPs

Based upon facility evaluation, Section 4.0 (Potential Pollutant Sources) identified those types and locations of equipment that can potential impact storm water as a result of operational or equipment failure or human error. The continuing structural or non-structural Best Management Practices (BMPs) that are currently utilized, and will continue to be utilized, until planned BMP feasibility studies are completed for possible future construction and/or implementation. Refer also to Section 5.5.

5.5 BMPs Planned for Consideration

BMPs planned for consideration at this facility are limited to those identified during periodic evaluations. Before structural BMPs can be implemented, the suggested BMP normally requires review from Engineering and a Feasibility Study conducted. The following table is providing to track the progress of suggested BMPs. Refer to Appendix D, Annual Compliance Evaluation for the most recent BMP recommendations.

New BMP Candidates Since the Last Site Evaluation:	Responsible Person	Status

5.5.1 Feasibility Study

Refer to Action Items Implementation Schedule in Section 7.5 below.

6.0 GOOD HOUSEKEEPING MEASURES

VA0052451, Part I, F.1.2.b. Measures and Controls. (SWPPP Cross Reference #5)

6.1 Fugitive Dust Emissions

There is no coal handling areas on site. The Paint Shop utilizes a ventilation filtration system to control sand blasting dust.

6.2 Delivery Vehicles

Bulk chemicals are delivered in closed container trucks and are unloaded in accordance with station procedures 1/2-OP-7.8, CH-32.933, CH-32.926 and CH-32.939 which are designed to minimize spillage. The delivery of petroleum products are handled in accordance with the Station's SPCC/VA ODCP Plan.

6.3 Fuel Oil Unloading Areas

Measures to prevent or minimize contamination of storm water runoff from fuel oil unloading areas are described in the Facility's SPCC/VA ODCP Plan.

6.4 Chemical Loading/Unloading Areas

Station procedures are used for unloading tankers to minimize accidents/spillage. Facility personnel trained in spill response procedures is required to be present during unloading activities.

6.5 Miscellaneous Loading/Unloading Areas

Miscellaneous materials are handled at the "Loading Dock" which is under cover.

6.6 Small Liquid Storage Tanks

All aboveground storage tanks have containments designed to hold the entire contents of tanks and storm water. The integrity of the tanks are routinely inspected.

6.7 Large Bulk Fuel Storage Tanks

Refer to Section 4.4 of this plan and the Facility's SPCC/VA ODCP Plan, which is maintained under separate cover.

6.8 Spill Reduction Measures

Refer to Section 5.0 of this plan and the Facility's SPCC/VA ODCP Plan, which is maintained under separate cover.

6.9 Oil Bearing Equipment in Switchyards

The Oil Bearing equipment in the Facility's switchyard is maintained in accordance with SPCC guidelines and included in the Transmission / Distribution's SPCC plan, which maintained under separate cover.

6.10 Residue Hauling Vehicles

The Facility does not conduct routine hauling activities that are suspected to generate residue.

6.11 Ash Loading Areas

This Facility does not generate ash.

6.12 Areas Adjacent to Disposal Ponds or Landfills

This Facility does not utilize disposal ponds and/or landfills. The ponds located at this facility are used as various water treatments.

6.13 Landfills, Scrap Yards, Surface Impoundments, Open Dumps, General Refuse Sites

There no active landfills or open dumps on this Facility's property. A contractor handles general refuse (solid waste) disposal. The area is graded such that runoff is directed to the settling ponds. The "Settling Ponds' berms are inspected in accordance with dam safety regulations.

6.14 Maintenance Activities

6.14.1 Vehicle and Equipment Storage Areas

Vehicle repair is performed indoors. Transformers are repaired onsite and any contaminated soil/gravel is removed.

6.14.2 Fueling Areas

Measures to prevent or minimize contamination of storm water runoff from fueling areas are described in the Facility's SPCC/VA ODCP Plan, which is maintained under separate cover.

6.14.3 Material Storage Areas / Universal Waste Storage Areas

Materials are stored in a covered building.

6.14.4 Vehicle and Equipment Cleaning Areas

All wash-water from the Maintenance Shop is directed to the sewage treatment plant.

6.14.5 Vehicle and Equipment Maintenance Areas

Vehicle maintenance is performed indoors at the Maintenance Shop.

6.15 Material Storage Areas

Materials are either stored under roof or in areas that the drain to the Facility's Waste Water system.

6.16 Salt Storage

VA0052451, Part I, F.3.4.e.2. Additional Requirements for Salt Storage. (SWPPP Cross Reference #27)

This Facility maintains a salt storage pile under the outside walkway of the SCOBN building, any runoff is routed to the settling ponds, which is discharges in accordance with the VPDES permit requirements.

State Change History

Submit	Draft 8/20/2008 16:33:29	Submit	Supervisor Review 8/20/2008 16:33:42 Owner :	Complete	CRT Review 8/20/2008 17:03:11 Owner :	To O/R	O/R Review 8/21/2008 10:26:27 Owner :

Section 1

Applicable to site: NANN
Record #: CR106570
Revision Number: 0 **Submitter:**

Submitter Dept.: NANN - Licensing
Submitter Phone Number: 2856
Submitter Pager Number: 3280
One-Line Description: Observed clear water flowing from storm water outfall: 022 during dry weather.
Description: While performing an annual comprehensive dry inspection of the station storm water outfalls, observed a continuous discharge of water (approx. 5 to 10 gpm) coming from storm water outfall # 022. The water was cold,clear, and did not have an odor. Since there has not been any appreciable rainfall for over a week, there should not have been any discharge coming from this outfall. No discharges were observed at the other storm water outfalls.
Discovery Date: 8/20/2008 **Discovery Time:** 14:00:00
Method of Discovery: OBS (Observation / Walkdown)
Literal 1: **If this CR is associated with the BACC Program, please ensure that the CR Description contains sufficient information to ensure the ability to quickly locate the component, which will ensure ALARA.**
Associated with Boric Acid?: No
Applicable to unit: None **Associated w/ Equipment Location?:** No
Equipment(s): N/A
Equipment Location Display: **Equipment Location - Critical Component - PRA Flag - Quality Classification - Component Description**

Equipment Location Links:
Initial Actions: (FIN Team), Domestic Water Engineer, and Shift Manager informed of observation.
Additional C/A processes req'd?: Other
Text Question 1: **Provide details for any Additional C/A processes needed:**
Text Answer 1: Determine source of water.
C/As Initiated (REA, WR, ETC): None.
Tag Hung: No
Tag Number: N/A
Additional Contacts:
Supervisor - CR Review:
Question G: **Is this CR an Operability/Reportability Issue Requiring O/R Review?**
Yes/No G: No
Question H: **Does this CR affect personnel safety?**
Yes/No H: No
Question I: **Does this CR affect plant safety?**
Yes/No I: No
Question J: **Does this CR involve plant equipment?**
Yes/No J: No
Question K: **Is this CR an environmental concern?**
Yes/No K: No
Literal 2: **Unit Conditions:**
Unit 1% Pwr:
Unit 2% Pwr:
Unit 3% Pwr: NA
Unit 1 Mode: (None)
Unit 2 Mode: (None)
Unit 3 Mode: NA
OP-AA-102 Review Req'd?: (None)
Is a TS SSC Affected?: (None)

TS SSC Operability Assessment:	(None)
Text Question 2:	Basis for operability:
Text Answer 2:	
Question L:	Is an Operability Assessment req'd for an SSC, which is Functional for its TRM function, to demonstrate operability for its TS function?
Yes / No L:	(None)
Literal 4:	The basis for establishing IOD can be documented in the "Basis for Operability" field. An IOD assignment does not necessarily need to be created.
Is an IOD Assignment Required?:	(None)
LCO entered:	(None)
Applicable LCO:	
Non-TS SSC Functionality Assessment.:	(None)
Literal 5:	NOTE: If a RAS is to be assigned to determine the answer to the next question, select "TBD" (to be determined) for the answer to the next question.
Does it impact a TS SSC?:	(None)
Literal 6:	The basis for establishing Non-TS SSC Functionality may be documented in the "Basis for Operability" field. A RAS assignment does not necessarily need to be created in these instances.
Is a RAS Assignment Needed?:	(None)
Literal 7:	If this Condition Report is addressing an SSC, document the qualification status of the SSC in the following field. Otherwise select N/A. NOTE: An SSC can be Operable or Functional and still not be Fully Qualified.
SSC Qualification Status:	(None)
Reportable condition?:	(None)
Text Question 3:	Reportability Comments:
Text Answer 3:	
Can IOD be established?:	(None)
Literal 3:	If this CR is associated with any system leakage, provide answers to the following:
Leakage Category:	(None) Leakage Severity: (None)
O/R Comments:	
Significance:	(None) Deficiency Type: (None)
Potential Repeat:	(None)
Previous Issues (PIs, CRs):	
CR FLAGS:	(None)
CRT Report Section(s):	(None)
License Renewal Flags:	(None) Affected Department: (None)
CRT Comments:	Per CRT discussion, as this CR appears to involve potential environmental release issues, it should be reviewed for possible Reportability concerns.
Comments:	8/20/2008 17:03:11 - : DW System Engineer is currently investigating source of water.- Entered by from [CR] [Supervisor Review]
Old Record #:	

Section 2

Process Code:	(None)	Activity Codes:	(None)
Human Error Types:	(None)	Process Related Failure:	(None)
Org. & Mgmt Failure mode:	(None)	HU Failure modes:	(None)
Equipment Failure Modes:	(None)	Primary INPO criteria:	(None)
Secondary INPO criteria:	(None)	Operations Hot Buttons:	(None)
Engineering Hot Buttons:	(None)	Maintenance Hot Buttons:	(None)
RP Hot Buttons:	(None)	Chemistry Hot Buttons:	(None)
EP Hot Buttons:	(None)	Training Hot Buttons:	(None)
Security Hot Buttons:	(None)	OR Hot Buttons:	(None)
O&P Hot Buttons:	(None)	NSS Hot Buttons:	(None)
Supply Chain Hot Buttons:	(None)	Other Hot Buttons:	(None)

Section 3

Work Order Number(s):
Status Description:
Status Date:
Actual Finish Date:
Work Performed Description:

Section 5

CR Completed Date: **CR Printed Date:**
CR Validated Date: **CR Who Validated:** (None)
RM Attachment Links:

nge History

8/20/2008 16:33:42 by
Owner Changed From I
Secondary Owner Char

Last Modified Date Changed From 8/20/2008 16:33:29 To 8/20/2008 16:33:42
Last State Change Date Changed From 8/20/2008 16:33:29 To 8/20/2008 16:33:42
State Changed From Draft To Supervisor Review Via Transition: Submit
Parent CR Changed From (None) To CR106570: NANN - Observed clear water flowing from storm water outfall: 022 during dry weather.

8/20/2008 17:03:11 by
Yes/No G Changed From Yes To No
Yes/No H Changed From Yes To No
Yes/No I Changed From Yes To No
Yes/No J Changed From Yes To No
Yes/No K Changed From Yes To No
Comments Changed From " To '[Appended:] DW System Engineer is currently investigating source of water.- Entered by from [CR] [Supervisor Review]'
Owner Changed From
Secondary Owner Changed From ,

Last Modified Date Changed From 8/20/2008 16:33:42 To 8/20/2008 17:03:11
Last Modifier Changed From To
Last State Change Date Changed From 8/20/2008 16:33:42 To 8/20/2008 17:03:11
Last State Changer Changed From
State Changed From Supervisor Review To CRT Review Via Transition: Complete
NewCR Changed From Yes To No

8/21/2008 10:26:27 by
CRT Comments Changed From " To 'Per CRT discussion, as this CR appears to involve potential environmental release issues, it should be reviewed for possible Reportability concerns.'
Last Modified Date Changed From 8/20/2008 17:03:11 To 8/21/2008 10:26:27
Last Modifier Changed From
Last State Change Date Changed From 8/20/2008 17:03:11 To 8/21/2008 10:26:27
Last State Changer Changed From
State Changed From CRT Review To O/R Review Via Transition: To O/R

/Services/6/Dom To

cc

08/22/2008 01:02 PM

bcc

Subject Fw: North Anna

History This message has been forwarded

Just as I expected, DEQ is just requesting us to keep them updated.

FYI - was conducting his Storm Water Dry Weather Evaluation and found SW Outfall 022 was discharging with an estimated flow of 5 gpm. The water appears clean is suspected to be from a nearby domestic line or groundwater (both of which are listed in the VPDES as Allowable Non-Storm Water). The station will be testing both the SW water and the domestic water for comparison and characterization.

Thanks,

Dominion Generation (EES)
Environmental Specialist III
(804) 273-2991
tie 8-730-2991

----- Forwarded by Rick Woolard/Services/6/Dom on 08/22/2008 12:58 PM -----

"Mackert,Susan" <sdmackert@deq.virginia.gov>

08/22/2008 12:51 PM

To <Rick.Woolard@dom.com>

cc

Subject North Anna

Hi Rick,

I got your message concerning North Anna. Thanks for the heads up & keep me posted.

Thanks,
Susan

Susan Mackert

Water Permit Writer

DEQ-NVRO

13901 Crown Court

Woodbridge, VA 22193

Submit	Draft 8/20/2008 16:33:29 Owner :	Submit	Supervisor Review 8/20/2008 16:33:42	Complete	CRT Review 8/20/2008 17:03:11 Owner :	To O/R	O/R Review 8/21/2008 10:26:27 Owner :
Return	Supervisor Review 8/21/2008 17:36:13	Return	Draft 8/22/2008 10:01:30 Owner :	Submit	Supervisor Review 8/22/2008 10:22:58	Complete	O/R Review 8/22/2008 16:42:03 Owner :
Complete	CRT Review 8/22/2008 16:47:29	CA	CRT Assignment Creation 8/25/2008 11:18:06		Assignments Pending 8/25/2008 11:22:36 Owner :		

Section 1

Applicable to site: NANN
Record #: CR106570
Revision Number: 0
Submitter:
Submitter Dept.: NANN - Licensing
Submitter Phone Number: 2856
Submitter Pager Number: 3280
Line Description: Observed clear water flowing from storm water outfall: 022 during dry weather.
Description: While performing an annual comprehensive dry inspection of the station storm water outfalls, observed a continuous discharge of water (approx. 5 to 10 gpm) coming from storm water outfall # 022. The water was cold,clear, and did not have an odor. Since there has not been any appreciable rainfall for over a week, there should not have been any discharge coming from this outfall. No discharges were observed at the other storm water outfalls.
Discovery Date: 8/20/2008
Discovery Time: 14:00:00
Method of Discovery: OBS (Observation / Walkdown)
Literal 1: If this CR is associated with the BACC Program, please ensure that the CR Description contains sufficient information to ensure the ability to quickly locate the component, which will ensure ALARA.
Associated with Boric Acid?: No
Applicable to unit: None
System(s): N/A
Associated w/ Equipment Location?: No
Equipment Location Display: Equipment Location - Critical Component - PRA Flag - Quality Classification - Component Description
Equipment Location Links:
Initial Actions: (FIN Team), Domestic Water Engineer, and Shift Manager informed of observation.
Additional C/A processes req'd?: Other
Text Question 1: Provide details for any Additional C/A processes needed:
Text Answer 1: Determine source of water.
C/As Initiated (REA, WR, ETC): None.
Tag Hung: No
Tag Number: N/A
Additional Contacts:
Supervisor - CR Review:
Question G: Is this CR an Operability/Reportability Issue Requiring O/R Review?
Yes/No G: No
Question H: Does this CR affect personnel safety?
Yes/No H: No
Question I: Does this CR affect plant safety?

Rick Woolard /Services/6/Dom

11/17/2008 02:54 PM

To Randy Markey/Generation/3/Dom@VANCPOWER, Rick Willis/Services/6/Dom@VANCPOWER

cc Karen K Canody/Services/6/Dom@VANCPOWER, "Mackert,Susan" <sdmackert@deq.virginia.gov>

bcc

Subject Fw: North Anna Special Sampling for Storm Water Outfall 022

Randy,
The attached email contains the results of our water quality comparison between North Anna Power Station's Storm Water Outfall 022 and the nearby groundwater well. Please note, the water from Outfall 022 is better than the groundwater collected. The groundwater analysis appears to be influenced by the Total Dissolved Solids (TDS) (GW - 4 x higher), when setting the TDS equal, the detections between the SW Outfall and GW appear to be similar. Storm Water Outfall 022's analyticals do not exceed the Facility's Water Quality Criteria / Waste Load Allocations limits, no major concerns with the continues discharge from this outfall.

Please print the results along with the isotopic results and place in the Station's SWPPP for documentation.

Sincerely,

Rick Woolard
Dominion Generation (EES)
Environmental Specialist III
(804) 273-2991
tie 8-730-2991

----- Forwarded by Rick Woolard/Services/6/Dom on 11/17/2008 01:10 PM -----

David Yaworsky/Services/6/Dom

11/17/2008 12:53 PM

To Rick Woolard/Services/6/Dom@VANCPOWER

cc

Subject North Anna Special Sampling

[attachment "0153_001.pdf" deleted by Randy Markey/Generation/3/Dom]

MISCELLANEOUS ACTIVITY DETERMINATION

SAMPLE DATE: 10-14-08 SAMPLE TIME: 1045 & 1115

SAMPLE IDENTIFICATION: Groundwater Well and Outfall 022 Samples

REASON FOR SAMPLE: Isotopic Analysis

REQUESTED BY: R. Markey @ EXT. 2856

Beeper: N/A

SAMPLE RESULTS - SEE ATTACHED

NUCLIDE	µCi/ml	COMMENTS
	N.D.	

REPORTED BY: W. Amarow

RECEIVED BY: R. Markey Via Telephone

NOTE: Supervisory Review is required if analysis is for unrestricted release of Bulk Material. (i.e. Oil, Water, Soil)

SUPERVISORY REVIEW: [signature]

DISPOSITION/REMARKS:

(Page 1 of 1)

Attachment 3

LIQUID TRITIUM COUNTING WORKSHEET - BECKMAN LS-6000SC

Equations: Net cpm= Gross cpm- Background cpm

$\mu Ci\ Sample = \frac{Net\ cpm \times 4.5\ E\text{-}7}{Efficiency,\ cpm/dpm}$

$Liquid\ Sample\ \mu Ci/mL = \frac{\mu Ci\ Sample}{Sample\ volume\ counted,\ mL}$

Sample ID No.	Gross CPM	Bkg. CPM	Net CPM	Efficiency CPM/DPM	µCi Sample	Liquid Sample Data Vol. Cntd. mL	Liquid Sample Data Sample µCi/mL	Date Counted	Calculated By Initials
Outfall 022	14.60	14.70	N.D.	0.372	N.D.	3.0	N.D.	10-14-08	WA
Groundwater Well	14.90	14.70	0.20	0.372	<MDA	3.0	<MDA	10-14-08	WA

EQUATIONS

$MDC(cpm) = (4.66)\sqrt{\frac{BKG\ (cpm)}{Count\ time\ (min)}} + BKG(cpm)$

$LLD(\mu Ci/ml) = (4.66)\frac{\sqrt{\frac{BKG\ (cpm)}{Count\ time\ (min)}}}{(Counter\ eff)\ (vol)\ (2.22E{+}6\ dpm/\mu Ci)\ (e^{-\lambda t})}$

MDC CALCULATION

$MDC(\_\_\_\_\_)\ Gross\ cpm = (4.66)\sqrt{\frac{(\_\_\_\_\_)BKG\ (cpm)}{(\_\_\_\_\_)Count\ time\ (min)}} + (\_\_\_\_\_)\ BKG(cpm)$

LLD CALCULATION

$LLD(\_\_\_\_\_)(\mu Ci/ml) = (4.66)\frac{\sqrt{\frac{(\_\_\_\_\_)\ BKG\ (cpm)}{(\_\_\_\_\_)Count\ time\ (min)}}}{(\_\_\_\_\_Counter\ eff)\ (\_\_\_\_\_vol)\ (2.22E{+}6\ dpm/\mu Ci)\ (\_\_\_\_\_e^{-\lambda t})*}$

$* e^{-\lambda t}$ **Calculation:** Document performance of this calculation here and insert results into LLD Calculation above

$e^{\left(\frac{-0.693}{\_\_\_\_\_half\ life\ (min)}\right)(\_\_\_\_\_time\ (min))}$

NOTE: LLDs for liquid and gaseous samples will not be the same since they have different volumes.
NOTE: IF the sample is counted within 15 days there is no need to decay correct results, e.g., $(e^{-\lambda t}) = 1.0$

Reviewed By (Signature)	Date
George R. [illegible]	10/20/08

North Anna Power Station

Analysis Report generated 14/Oct/2008 13:46:39 Spectrum Filename: An17F4.An1

Sample Description: OUTFALL 022 LIQUID SAMPLE

Sample Date/Time:	14/Nov/2008 10:45:00	Sample Size:	1.000E+003
Detector Number:	1	Concentration Units:	uCi/mls
Acquire Date/Time:	14/Oct/2008 13:26:30	Dead Time:	0.05 %
Elapsed Live Time:	1200.00 Seconds	Library Used:	MasterKR85.lib
Elapsed Real Time:	1200.60 Seconds	Calibration File:	det1liquidmarinelli.Clb

SUMMARY OF NUCLIDES IN SAMPLE

Nuclide	Time Corrected Activity uCi/mls	Total Uncertainty 2 Sigma %	Nuclide Origin
K-40	7.21E-007	53.83	Natural
PB-214		34.69	Natural
BI-214		36.45	Natural

Spectrum Filename: An17F4.An1 14/Oct/2008 13:46:39 Page 1

IDENTIFIED PEAK SUMMARY

Nuclide	Half Life	t	Peak Channel	Centroid Energy	Background Counts	Net Area Counts	Uncertainty 2Sigma%	FWHM keV	Peak Code
PB-214	26.8	m	1,179.51	295.22	26.77	33.23	56.1	0.96	D
PB-214	26.8	m	1,405.96	351.90	21.60	57.40	40.5	0.86	
BI-214	19.9	m	2,434.93	609.46	9.50	51.50	36.3	1.57	s
BI-214	19.9	m	3,069.73	768.36	2.49	13.39	64.0	1.34	D
BI-214	19.9	m	4,475.52	1,120.28	1.13	13.52	58.8	1.59	D
K-40	1,281,040,630.9	y	5,835.47	1,460.75	5.72	21.28	53.8	1.81	D
BI-214	19.9	m	7,050.00	1,764.84	0.00	10.00	63.2	0.63	s

Peak Code Legend: s = Peak fails shape tests.
D = Peak area deconvoluted.
A = Derived Average Activity.

UNIDENTIFIED PEAK SUMMARY

Peak Channel	Centroid Energy	Background Counts	Net Area Counts	Intensity Cts/Sec	Uncertainty Sigma%	FWHM keV	Suspected Nuclide	Code

Peak Code Legend: s = Peak fails shape tests.
D = Peak area deconvoluted.

North Anna Power Station

Analysis Report generated 14/Oct/2008 13:46:45 Spectrum Filename: An199D.An1

Sample Description: GROUNDWATER WELL LIQUID SAMPLE

Sample Date/Time:	14/Oct/2008 11:15:00	Sample Size:	1.000E+003
Detector Number:	2	Concentration Units:	uCi/mls
Acquire Date/Time:	14/Oct/2008 13:26:35	Dead Time:	0.07 %
Elapsed Live Time:	1200.00 Seconds	Library Used:	MasterKR85.lib
Elapsed Real Time:	1200.88 Seconds	Calibration File:	det2liquidmarinelli.Clb

SUMMARY OF NUCLIDES IN SAMPLE

Nuclide	Time Corrected Activity uCi/mls	Total Uncertainty 2 Sigma %	Nuclide Origin
PB-214	1.41E-005	21.10	Natural
BI-214	4.38E-005	24.75	Natural

Spectrum Filename: An199D.An1 14/Oct/2008 13:46:45 Page 1

IDENTIFIED PEAK SUMMARY

Nuclide	Half Life	t	Peak Channel	Centroid Energy	Background Counts	Net Area Counts	Uncertainty 2Sigma%	FWHM keV	Peak Code
PB-214	26.8	m	1,209.79	295.36	27.20	66.80	37.1	0.91	
PB-214	26.8	m	1,441.81	351.99	6.46	102.54	21.0	1.04	D
BI-214	19.9	m	2,496.04	609.32	4.58	74.08	24.6	1.26	D
BI-214	19.9	m	3,826.34	934.05	6.62	3.53	5.2	1.52	D
BI-214	19.9	m	5,073.69	1,238.55	0.00	15.00	51.6	0.79	s

Peak Code Legend: s = Peak fails shape tests.
D = Peak area deconvoluted.
A = Derived Average Activity.

UNIDENTIFIED PEAK SUMMARY

Peak Channel	Centroid Energy	Background Counts	Net Area Counts	Intensity Cts/Sec	Uncertainty Sigma%	FWHM keV	Suspected Nuclide	Code

Peak Code Legend: s = Peak fails shape tests.
D = Peak area deconvoluted.

DOMINION LABORATORY SERVICES

REPORT PRODUCED ON 11/17/2008

WATER SAMPLE TESTING - NONROUTINE PROJECTS.

Location: NORTH ANNA

Submitter: RICK WOOLARD

Lab Number	358222	358223
Description	022	WASH PAD
Sample Date	10/14/08	10/14/08
Time	1048	1115
Antimony as Sb, ppb	< 1.	< 1.
Arsenic as As, ppb	< 3.	< 3.
Barium as Ba, ppb	183.	849.
Beryllium as Be, ppb	< 0.2	< 0.2
Cadmium as Cd, ppb	< 0.3	< 0.3
Chromium as Cr, ppb	3.	2.
Cobalt as Co, ppb	< 3.	72.
Copper as Cu, ppb	< 1.	16.
Dis. Ag, ppb	< 0.1	< 0.1
Dis. As, ppb	< 3.	< 3.
Dis. Ba, ppb	133.	813.
Dis. Be, ppb	< 0.2	< 0.2
Dis. Cd, ppb	< 0.3	< 0.3
Dis. Co, ppb	< 3.	8.
Dis. Cr, ppb	1.	< 1.
Dis. Cu, ppb	< 1.	4.
Dis. Ni, ppb	< 5.	< 5.
Dis. Pb, ppb	< 1.	< 1.
Dis. Sb, ppb	< 1.	< 1.

DOMINION LABORATORY SERVICES

REPORT PRODUCED ON 11/17/2008

WATER SAMPLE TESTING - NONROUTINE PROJECTS.

Location: NORTH ANNA Submitter: RICK WOOLARD

Lab Number	358222	358223
Description	022	WASH PAD
Sample Date	10/14/08	10/14/08
Time	1048	1115
Dis. Se, ppb	< 3.	< 3.
Dis. Tl, ppb	< 0.2	< 0.2
Dis. V, ppb	< 1.	2.
Dis. Zn, PPM	0.058	0.043
Lead as Pb, ppb	< 1.	4.
Nickel as Ni, ppb	< 5.	17.
Oil and Grease, PPM	< 5.00	< 5.00
Selenium as Se, ppb	< 3.	< 3.
Silver as Ag, ppb	< 0.1	< 0.1
T-Dis. Solids, PPM	126.8	403.5
Thallium as Tl, ppb	< 0.2	< 0.2
TSS, PPM	2.6	513.5
Vanadium as V, ppb	< 1.	5.
Zinc as Zn, PPM	0.062	0.043

Attachment G

Additional Clean Water Act Requirements For NPDES Permit Applications

§122.21(r) Requirements

At 72 FR 37109, July 9, 2007, §122.21(r)(1)(ii) and (r)(5) were suspended.

§125.95(b) Requirements

At 72 FR 37109, July 9, 2007, §125.95 was suspended.

Additional Information

In accordance with the 2007 VPDES Permit, Part I.E.16, the Impingement Mortality Characterization Study for North Anna Power Station was submitted to the DEQ – Northern Regional Office on October 16, 2008.

North Anna Power Station currently operates under a Clean Water Act (CWA) §316(a) thermal variance. See Attachment H for additional information.

Attachment H

Permit Requests

Substantially Identical Outfalls

Part I.A.3, 14, 16, 17, and 18 contain a statement regarding substantially identical outfalls: Discharge data from Outfall [number] shall be used to represent Outfall [number]. As written, these special conditions require that effluent from one outfall be reported for another outfall (i.e. sampling and reporting effluent data from the actual outfall is not allowed). While Dominion wishes to continue utilizing substantially identical outfalls, we request that these Special conditions be written to allow additional flexibility with respect to analytical samples; such flexibility is needed, for example, in the event that the representative outfall is either unavailable, or not discharging, when the other outfall is discharging. Potential permit language below has been included for your consideration: Outfall XXX is substantially identical to Outfall YYY; discharge data from Outfall XXX may be used to represent Outfall YYY.

Continuance of 316(a) Variance

North Anna Power Station currently operates under a Clean Water Act (CWA) §316(a) thermal variance. Previously, the State Water Control Board determined that effluent limitations more stringent that the thermal limitations include in the existing permit were not necessary to assure the projection and propagation of a balanced indigenous community of shellfish, fish, and wildlife in Lake Anna and the North Anna River downstream of the lake. The facility operations have not significantly increased heat input, and the station's thermal loading to the lake from Units 1 and 2 is not expected to increase. Additionally, the annual biological reports, submitted under Part I.E.15, indicate that Lake Anna and the Lower North Anna River continue to support a well-balanced ecological community. Accordingly, Dominion believes that the data generated during our §316(a) demonstration studies remain representative for Lake Anna and the North Anna River and for our station operations; we therefore, request continuance of this variance.

Removal of Stormwater Outfalls 023 and 026

Dominion requests that stormwater Outfalls 023 and 026 be removed from the VPDES permit. While the stormwater in these drainage areas is initially directed into grassy ditches, the flow transitions from a point source flow into sheet flow prior to leaving the Dominion property (i.e. by the time the stormwater flows from these ditches reaches Lake Anna, it is no longer flowing in a ditch or visible outfall but rather is sheet drainage from the adjacent field.) As stormwater non-point sheet flow is not addressed in VPDES permits, we would like to remove these outfalls. All other regulated storm water outfalls enter the lake or WHTF from a distinct ditch or discharge point.

Post 316(a) Monitoring Report (Part I.E.15)

Permit special condition E.15 requires an annual report on the 316(a) monitoring to be submitted by March 31st for the previous year's activities. Dominion requests that this report date be revised to allow additional time for data analysis and the report compilation and suggest May 31st for the revised date.