UNITED STATES MARINE CORPS
MARINE CORPS INSTALLATIONS NATIONAL CAPITAL REGION
MARINE CORPS BASE QUANTICO
3250 CATLIN AVENUE
QUANTICO VIRGINIA 22134 5001

IN REPLY REFER TO:
5090
B 046
24 SEP 2015

VA DEPARTMENT OF ENVIRONMENTAL QUALITY
NORTHERN
SEP 28 2015
REGIONAL OFFICE
WOODBRIDGE, VA

Ms. Anna Westernik
Department of Environmental Quality
13901 Crown Ct.
Woodbridge, VA 22193

Dear Ms. Westernik:

SUBJECT: CAMP UPSHUR SEWAGE TREATMENT PLANT, VA0028371, PERMIT RE-APPLICATION

In accordance with our permit, Part II, M., please find enclosed MCB Quantico's re-application package for a new permit for the Camp Upshur Sewage Treatment Plant, Permit# VA0028371. With this submittal, we request a new permit be issued for the subject system.

If you have any questions regarding the enclosed package, please contact Mr. Jonmark Sullivan at (703) 432-0539.

Sincerely,

J. M. MURRAY
Colonel, U.S. Marine Corps
Commander

Enclosures:
1. Form 2A
2. VPDES Application Addendum
3. Sludge Application

FACILITY NAME AND PERMIT NUMBER:
Camp Upshur Sewage Treatment Plant, VA0028371

Form Approved 1/14/99
OMB Number 2040-0086

BASIC APPLICATION INFORMATION

PART A. BASIC APPLICATION INFORMATION FOR ALL APPLICANTS:

All treatment works must complete questions A.1 through A.8 of this Basic Application Information packet.

A.1. Facility Information.

Facility name: Camp Upshur Sewage Treatment Plant

Mailing Address: Commander, MCB Quantico - ATTN: Amy Denn, Head NREA Branch (B046)
3250 Catlin Avenue, Quantico, VA 22134

Contact person: Jonmark Sullivan

Title: Water Program Manager

Telephone number: (703) 432-0539

Facility Address (not P.O. Box): MCB Quantico - Camp Upshur
Prince William County, VA 22134

A.2. Applicant information. If the applicant is different from the above, provide the following:

Applicant name: J. M. Murray, Colonel, US Marine Corps

Mailing Address: Commander, MCB Quantico (B042)
3250 Catlin Avenue, Suite 235, Quantico, VA 22134

Contact person: Jonmark Sullivan

Title: Water Program Manager

Telephone number: (703) 432-0539

Is the applicant the owner or operator (or both) of the treatment works?

✓ owner ✓ operator

Indicate whether correspondence regarding this permit should be directed to the facility or the applicant.

✓ facility ____ applicant

A.3. Existing Environmental Permits. Provide the permit number of any existing environmental permits that have been issued to the treatment works (include state-issued permits).

NPDES: VA0028371
UIC: ____
RCRA: ____
PSD: ____
Other: Petroleum Registration Site - ID# 3021353
Other: ____

A.4. Collection System Information. Provide information on municipalities and areas served by the facility. Provide the name and population of each entity and, if known, provide information on the type of collection system (combined vs. separate) and its ownership (municipal, private, etc.).

Name	Population Served	Type of Collection System	Ownership
Camp upshur	50-1000	Seperate Sanitary	Federal

Total population served 50-1000

A.5. Indian Country.

a. Is the treatment works located in Indian Country?

_____ Yes ✓ No

b. Does the treatment works discharge to a receiving water that is either in Indian Country or that is upstream from (and eventually flows through) Indian Country?

_____ Yes ✓ No

A.6. Flow. Indicate the design flow rate of the treatment plant (i.e., the wastewater flow rate that the plant was built to handle). Also provide the average daily flow rate and maximum daily flow rate for each of the last three years. Each year's data must be based on a 12-month time period with the 12th month of "this year" occurring no more than three months prior to this application submittal.

a. Design flow rate 0.14 mgd

	Two Years Ago	Last Year	This Year	
b. Annual average daily flow rate	0.02 (old plant)	0.013 (old plant)	0.02 (old plant)	mgd
c. Maximum daily flow rate	0.097 (old plant)	0.112 (old plant)	0.105 (old plant)	mgd

A.7. Collection System. Indicate the type(s) of collection system(s) used by the treatment plant. Check all that apply. Also estimate the percent contribution (by miles) of each.

✓ Separate sanitary sewer 100 %

_____ Combined storm and sanitary sewer _____ %

A.8. Discharges and Other Disposal Methods.

a. Does the treatment works discharge effluent to waters of the U.S.? ✓ Yes _____ No

If yes, list how many of each of the following types of discharge points the treatment works uses:

i. Discharges of treated effluent 1

ii. Discharges of untreated or partially treated effluent _____

iii. Combined sewer overflow points _____

iv. Constructed emergency overflows (prior to the headworks) _____

v. Other _____ _____

b. Does the treatment works discharge effluent to basins, ponds, or other surface impoundments that do not have outlets for discharge to waters of the U.S.? _____ Yes ✓ No

If yes, provide the following for each surface impoundment:

Location: _____

Annual average daily volume discharged to surface impoundment(s) _____ mgd

Is discharge _____ continuous or _____ intermittent?

c. Does the treatment works land-apply treated wastewater? _____ Yes ✓ No

If yes, provide the following for each land application site:

Location: _____

Number of acres: _____

Annual average daily volume applied to site: _____ Mgd

Is land application _____ continuous or _____ intermittent?

d. Does the treatment works discharge or transport treated or untreated wastewater to another treatment works? _____ Yes ✓ No

If yes, describe the mean(s) by which the wastewater from the treatment works is discharged or transported to the other treatment works (e.g., tank truck, pipe).

_____

If transport is by a party other than the applicant, provide:

Transporter name: _____

Mailing Address: _____

_____

Contact person: _____

Title: _____

Telephone number: _____

For each treatment works that receives this discharge, provide the following:

Name: _____

Mailing Address: _____

_____

Contact person: _____

Title: _____

Telephone number: _____

If known, provide the NPDES permit number of the treatment works that receives this discharge. _____

Provide the average daily flow rate from the treatment works into the receiving facility. _____ mgd

e. Does the treatment works discharge or dispose of its wastewater in a manner not included in A.8.a through A.8.d above (e.g., underground percolation, well injection)? _____ Yes ✓ No

If yes, provide the following for each disposal method:

Description of method (including location and size of site(s) if applicable):

_____

Annual daily volume disposed of by this method: _____

Is disposal through this method _____ continuous or _____ intermittent?

FACILITY NAME AND PERMIT NUMBER:
Camp Upshur Sewage Treatment Plant, VA0028371

Form Approved 1/14/99
OMB Number 2040-0086

WASTEWATER DISCHARGES:

If you answered "yes" to question A.8.a, complete questions A.9 through A.12 **once for each outfall** (including bypass points) through which effluent is discharged. Do not include information on combined sewer overflows in this section. **If you answered "no" to question A.8.a**, go to Part B, "Additional Application Information for Applicants with a Design Flow Greater than or Equal to 0.1 mgd."

A.9. Description of Outfall.

a. Outfall number: 001

b. Location: Quantico (City or town, if applicable); 22134 (Zip Code)
Prince William (County); VA (State)
38 37' 23" N (Latitude); 77 31' 45" W (Longitude)

c. Distance from shore (if applicable): N/A ft.

d. Depth below surface (if applicable): N/A ft.

e. Average daily flow rate: 0.0124 mgd

f. Does this outfall have either an intermittent or a periodic discharge? ✓ Yes ____ No (go to A.9.g.)

If yes, provide the following information:

Number of times per year discharge occurs: 126 (old plant)

Average duration of each discharge: 5 hours (old plant)

Average flow per discharge: 0.0124 (old plant) mgd

Months in which discharge occurs: All 12 months of the year

g. Is outfall equipped with a diffuser? ____ Yes ✓ No

A.10. Description of Receiving Waters.

a. Name of receiving water: Abandoned water withdrawal canal on Cedar Run

b. Name of watershed (if known): Lower Cedar Run/Town Run

United States Soil Conservation Service 14-digit watershed code (if known): ____

c. Name of State Management/River Basin (if known): Potomac River

United States Geological Survey 8-digit hydrologic cataloging unit code (if known): 02070010

d. Critical low flow of receiving stream (if applicable):
acute 0 cfs chronic 0 cfs

e. Total hardness of receiving stream at critical low flow (if applicable): N/A mg/l of $CaCO_3$

FACILITY NAME AND PERMIT NUMBER:
Camp Upshur Sewage Treatment Plant, VA0028371

Form Approved 1/14/99
OMB Number 2040-0086

A.11. Description of Treatment.

a. What levels of treatment are provided? Check all that apply.

✓ Primary ✓ Secondary
✓ Advanced ____ Other. Describe: ____

b. Indicate the following removal rates (as applicable):

Design BOD_5 removal or Design $CBOD_5$ removal	95.69%, 98.8%	%
Design SS removal	96.92%, 98.91%	%
Design P removal	91.99%, 88.94%	%
Design N removal	85.77%, 80.35%	%
Other ____	____	%

c. What type of disinfection is used for the effluent from this outfall? If disinfection varies by season, please describe.

UV disinfection

If disinfection is by chlorination, is dechlorination used for this outfall? ____ Yes ____ No

d. Does the treatment plant have post aeration? ✓ Yes ____ No

A.12. Effluent Testing Information. All Applicants that discharge to waters of the US must provide effluent testing data for the following parameters. Provide the indicated effluent testing required by the permitting authority for each outfall through which effluent is discharged. Do not include information on combined sewer overflows in this section. All information reported must be based on data collected through analysis conducted using 40 CFR Part 136 methods. In addition, this data must comply with QA/QC requirements of 40 CFR Part 136 and other appropriate QA/QC requirements for standard methods for analytes not addressed by 40 CFR Part 136. At a minimum, effluent testing data must be based on at least three samples and must be no more than four and one-half years apart.

Outfall number: 001 (New Plant, no data yet)

PARAMETER	MAXIMUM DAILY VALUE		AVERAGE DAILY VALUE		
	Value	Units	Value	Units	Number of Samples
pH (Minimum)		s.u.			
pH (Maximum)		s.u.			
Flow Rate					
Temperature (Winter)					
Temperature (Summer)					

* For pH please report a minimum and a maximum daily value

POLLUTANT		MAXIMUM DAILY DISCHARGE		AVERAGE DAILY DISCHARGE			ANALYTICAL METHOD	ML / MDL
		Conc.	Units	Conc.	Units	Number of Samples		
CONVENTIONAL AND NONCONVENTIONAL COMPOUNDS.								
BIOCHEMICAL OXYGEN	BOD-5							
DEMAND (Report one)	CBOD-5							
FECAL COLIFORM								
TOTAL SUSPENDED SOLIDS (TSS)								

END OF PART A.
REFER TO THE APPLICATION OVERVIEW TO DETERMINE WHICH OTHER PARTS OF FORM 2A YOU MUST COMPLETE

FACILITY NAME AND PERMIT NUMBER:
Camp Upshur Sewage Treatment Plant, VA0028371

Form Approved 1/14/99
OMB Number 2040-0086

BASIC APPLICATION INFORMATION

PART B. ADDITIONAL APPLICATION INFORMATION FOR APPLICANTS WITH A DESIGN FLOW GREATER THAN OR EQUAL TO 0.1 MGD (100,000 gallons per day).

All applicants with a design flow rate ≥ 0.1 mgd must answer questions B.1 through B.6. All others go to Part C (Certification).

B.1. Inflow and Infiltration. Estimate the average number of gallons per day that flow into the treatment works from inflow and/or infiltration.

< 100 gpd

Briefly explain any steps underway or planned to minimize inflow and infiltration.

I&I at Camp Upshur should be minimal since the Camp Upshur plant is brand new

B.2. Topographic Map. Attach to this application a topographic map of the area extending at least one mile beyond facility property boundaries. This map must show the outline of the facility and the following information. (You may submit more than one map if one map does not show the entire area.)

a. The area surrounding the treatment plant, including all unit processes.

b. The major pipes or other structures through which wastewater enters the treatment works and the pipes or other structures through which treated wastewater is discharged from the treatment plant. Include outfalls from bypass piping, if applicable.

c. Each well where wastewater from the treatment plant is injected underground.

d. Wells, springs, other surface water bodies, and drinking water wells that are: 1) within 1/4 mile of the property boundaries of the treatment works, and 2) listed in public record or otherwise known to the applicant.

e. Any areas where the sewage sludge produced by the treatment works is stored, treated, or disposed.

f. If the treatment works receives waste that is classified as hazardous under the Resource Conservation and Recovery Act (RCRA) by truck, rail, or special pipe, show on the map where that hazardous waste enters the treatment works and where it is treated, stored, and/or disposed.

B.3. Process Flow Diagram or Schematic. Provide a diagram showing the processes of the treatment plant, including all bypass piping and all backup power sources or redundancy in the system. Also provide a water balance showing all treatment units, including disinfection (e.g, chlorination and dechlorination). The water balance must show daily average flow rates at influent and discharge points and approximate daily flow rates between treatment units. Include a brief narrative description of the diagram.

B.4. Operation/Maintenance Performed by Contractor(s).

Are any operational or maintenance aspects (related to wastewater treatment and effluent quality) of the treatment works the responsibility of a contractor? ____Yes ✓ No

If yes, list the name, address, telephone number, and status of each contractor and describe the contractor's responsibilities (attach additional pages if necessary).

Name: _____

Mailing Address: _____

Telephone Number: _____

Responsibilities of Contractor: _____

B.5. Scheduled Improvements and Schedules of Implementation. Provide information on any uncompleted implementation schedule or uncompleted plans for improvements that will affect the wastewater treatment, effluent quality, or design capacity of the treatment works. If the treatment works has several different implementation schedules or is planning several improvements, submit separate responses to question B.5 for each. (If none, go to question B.6.)

a. List the outfall number (assigned in question A.9) for each outfall that is covered by this implementation schedule.

001

b. Indicate whether the planned improvements or implementation schedule are required by local, State, or Federal agencies.

____Yes ✓ No

c If the answer to B.5.b is "Yes," briefly describe, including new maximum daily inflow rate (if applicable).

_____

d. Provide dates imposed by any compliance schedule or any actual dates of completion for the implementation steps listed below, as applicable. For improvements planned independently of local, State, or Federal agencies, indicate planned or actual completion dates, as applicable. Indicate dates as accurately as possible.

Implementation Stage	Schedule MM / DD / YYYY	Actual Completion MM / DD / YYYY
– Begin construction	___/___/_____	03 / 01 / 2013
– End construction	___/___/_____	08 / 26 / 2015
– Begin discharge	___/___/_____	___/___/_____
– Attain operational level	___/___/_____	___/___/_____

e. Have appropriate permits/clearances concerning other Federal/State requirements been obtained? ____Yes ✓ No

Describe briefly: waiting on CTO

B.6. EFFLUENT TESTING DATA (GREATER THAN 0.1 MGD ONLY).

Applicants that discharge to waters of the US must provide effluent testing data for the following parameters. Provide the indicated effluent testing required by the permitting authority for each outfall through which effluent is discharged. Do not include information on combined sewer overflows in this section. All information reported must be based on data collected through analysis conducted using 40 CFR Part 136 methods. In addition, this data must comply with QA/QC requirements of 40 CFR Part 136 and other appropriate QA/QC requirements for standard methods for analytes not addressed by 40 CFR Part 136. At a minimum, effluent testing data must be based on at least three pollutant scans and must be no more than four and one-half years old.

Outfall Number: 001 (New Plant)

POLLUTANT	MAXIMUM DAILY DISCHARGE		AVERAGE DAILY DISCHARGE			ANALYTICAL METHOD	ML / MDL
	Conc.	Units	Conc.	Units	Number of Samples		
CONVENTIONAL AND NONCONVENTIONAL COMPOUNDS.							
AMMONIA (as N)							
CHLORINE (TOTAL RESIDUAL, TRC)							
DISSOLVED OXYGEN							
TOTAL KJELDAHL NITROGEN (TKN)							
NITRATE PLUS NITRITE NITROGEN							
OIL and GREASE							
PHOSPHORUS (Total)							
TOTAL DISSOLVED SOLIDS (TDS)							
OTHER							

END OF PART B.
REFER TO THE APPLICATION OVERVIEW TO DETERMINE WHICH OTHER PARTS OF FORM 2A YOU MUST COMPLETE

FACILITY NAME AND PERMIT NUMBER:

Camp Upshur Sewage Treatment Plant, VA0028371

Form Approved 1/14/99
OMB Number 2040-0086

BASIC APPLICATION INFORMATION

PART C. CERTIFICATION

All applicants must complete the Certification Section. Refer to instructions to determine who is an officer for the purposes of this certification. All applicants must complete all applicable sections of Form 2A, as explained in the Application Overview. Indicate below which parts of Form 2A you have completed and are submitting. By signing this certification statement, applicants confirm that they have reviewed Form 2A and have completed all sections that apply to the facility for which this application is submitted.

Indicate which parts of Form 2A you have completed and are submitting:

✓ Basic Application Information packet

Supplemental Application Information packet:

_____ Part D (Expanded Effluent Testing Data)

_____ Part E (Toxicity Testing: Biomonitoring Data)

_____ Part F (Industrial User Discharges and RCRA/CERCLA Wastes)

_____ Part G (Combined Sewer Systems)

ALL APPLICANTS MUST COMPLETE THE FOLLOWING CERTIFICATION.

I certify under penalty of law that this document and all attachments were prepared under my direction or supervision in accordance with a system designed to assure that qualified personnel properly gather and evaluate the information submitted. Based on my inquiry of the person or persons who manage the system or those persons directly responsible for gathering the information, the information is, to the best of my knowledge and belief, true, accurate, and complete. I am aware that there are significant penalties for submitting false information, including the possibility of fine and imprisonment for knowing violations.

Name and official title: J. M. Murray, Colonel, US Marine Corps, Commander MCB Quantico

Signature: J. Murray

Telephone number: 703-432-0539

Date signed: 24 SEP 2015

Upon request of the permitting authority, you must submit any other information necessary to assess wastewater treatment practices at the treatment works or identify appropriate permitting requirements.

SEND COMPLETED FORMS TO:

VPDES Sewage Sludge Permit Application for Permit Reissuance

Instructions

WHO MUST SUBMIT THE APPLICATION - All facilities with a current VPDES Permit that authorizes the discharge of treated sewage wastewater that are applying for reissuance must complete and submit this application.
Part 1 is general information to be provided by all facilities.
Part 2 must be completed by all facilities that generate Class A or Class B biosolids that are land applied.
Part 3 must be completed by all facilities that land apply Class B biosolids.

Part 1 – Sludge Disposal Management (To be completed by all facilities)

Facility Name: Camp Upshur Sewage Treatment Plant **VPDES Permit No:** VA0028371

1. **Shipment Off Site for Treatment or Blending**

   Is sewage sludge from your facility sent to another facility that provides treatment or blending? ☒ Yes ☐ No

   If you send sewage sludge to more than one facility, attach additional sheets as necessary.

   Shipment off site is: ☒ The primary method of sludge disposal ☐ A back up method of sludge disposal

   a. Receiving Facility Name MCB Quantico - Mainside Sewage Treatment Plant
   b. Receiving Facility VPDES Permit No. VA0028363
   c. Include an acceptance letter from the Receiving Facility.
   d. Receiving Facility's ultimate disposal method for sewage sludge King George Co., VA Landfill

2. **Disposal in a Municipal Solid Waste Landfill**

   Is sewage sludge from your facility placed in a municipal solid waste landfill? ☐ Yes ☒ No

   If sewage sludge is placed on more than one municipal solid waste landfill, attach additional pages as necessary.

   Landfilling is: ☐ The primary method of sludge disposal ☐ A back up method of sludge disposal

   a. Landfill Name _____
   b. Landfill Permit No. _____
   c. Include an acceptance letter from the landfill.

3. **Incineration**

   Is sewage sludge from your facility fired in a sewage sludge incinerator? ☐ Yes ☒ No

   Incineration is: ☐ The primary method of sludge disposal ☐ A back up method of sludge disposal

   a. Do you own or operate all sewage sludge incinerators in which sewage sludge from your facility is fired? ☐ Yes ☐ No
      If yes, provide the Air Registration No. _____
      If no, complete items b - d for each incinerator that you do not own or operate.
   b. Facility Name _____
   c. Air Registration No. _____
   d. Include an acceptance letter from the Incinerator.

4. **Class A Biosolids**

   Do you produce Class A biosolids for land application or distribution and marketing? If yes, complete Part 2. ☐ Yes ☒ No

   Are Class A biosolids from your facility land applied in bulk? ☐ Yes ☐ No

   Do you sell or give away Class A biosolids in a bag or other container for application to the land? If yes, provide the VDACS certification number? _____ ☐ Yes ☐ No

5. **Class B Biosolids**

   Do you produce Class B biosolids? If yes, complete Part 2. ☐ *Yes* ☒ *No*

   Are Class B biosolids from your facility land applied land applied under the authorization of this VPDES Permit? If yes, complete Part 3. ☐ *Yes* ☐ *No*

6. **Land Application Under a Separate Permit**

   Are biosolids from your facility land applied under the authorization of a permit other than your VPDES Permit? ☐ Yes ☒ No

   Biosolids are land applied under the authorization of a ☐ VPA permit ☐ Another VPDES Permit ☐ Out of State

   Complete items a - c for each VPA permit authorized to land apply biosolids from your facility.

   a. Permittee Name _____ b. Permit No. _____
   c. Include copy of any information you provide to the Receiving VPDES or VPA Permittee to comply with the "notice and necessary information" requirement of 9VAC25-31-530 F.

VPDES Sewage Sludge Permit Application for Permit Reissuance

Part 2 – Biosolids Characterization (To be completed by all facilities that generate biosolids that are land applied.)

1. Have there been changes to sludge treatment processes or storage facilities since the previous permit issuance/reissuance? ☐ Yes ☐ No
2. Do the biosolids generated under this permit that will be land applied meet one of the Class A pathogen requirements in 9VAC25-31-710 A 3 through A 8 or Class B pathogen requirements in 9VAC25-31-710 B 1 through B 4? ☐ Yes ☐ No

   Identify the pathogen reduction option utilized to demonstrate compliance with the pathogen reductions requirements and provide the data that demonstrate compliance with the applicable alternative. _____
3. Do the biosolids generated under this permit that will be land applied meet one of the vector attraction reduction requirements in 9VAC25-31-720 B 1 through B 10? ☐ Yes ☐ No

   Identify the vector attraction reduction option utilized to demonstrate compliance with the vector attraction reductions requirements and provide the data that demonstrate compliance with the applicable alternative. _____
4. Do the biosolids to be land applied meet the ceiling/pollutant concentrations in 9VAC25-31-540 B? ☐ Yes ☐ No
5. Has data from the most recent 3 samples for pH (S.U.), Percent Solids (%), Ammonium Nitrogen (mg/kg), Nitrate Nitrogen (mg/kg), Total Kjeldahl Nitrogen (mg/kg), Total Phosphorus (mg/kg), Total Potassium (mg/kg), Alkalinity as $CaCO_3$ (mg/kg), Arsenic (mg/kg), Cadmium (mg/kg), Copper (mg/kg), Lead (mg/kg), Mercury (mg/kg), Nickel (mg/kg), Selenium (mg/kg), Zinc (mg/kg) been submitted to DEQ? The samples shall be no more than 4½ years old and each sampling date shall be at least 1 month apart. ☐ Yes ☐ No

   If no, provide the data with this application.

Part 3 – Land Application of Class B Biosolids (To be completed by all facilities that land apply Class B biosolids.)

1. Provide to DEQ and to each locality in which biosolids are to be land applied, written evidence of financial responsibility. Evidence of financial responsibility shall be provided in accordance with 9VAC25-31-100 P 9.
2. For each site, provide a properly completed landowner agreement for each landowner, using the most current Land Application Agreement - Biosolids Form (VPDES Sewage Sludge Permit Application Form – Attachment to Section C).
3. Are any new land application fields proposed at this reissuance? ☐ Yes ☐ No

   If yes, contact the DEQ Regional Office for additional submittal requirements.
4. For the currently permitted land application fields, are the previously submitted site booklets, maps and acreage accurate. ☐ Yes ☐ No

   If no, contact the DEQ Regional Office for additional submittal requirements.
5. Does the facility's Biosolids Management Plan on file with DEQ include the following minimum information? ☐ Yes ☐ No
   a. An odor control plan that addresses the abatement of odors resulting from the storage and/or land application of biosolids.
   b. A description of the transport vehicles to be used.
   c. Procedures for biosolids offloading at the land application site including spill prevention, cleanup (including vehicle cleaning), field reclamation, and emergency notification and cleanup measures.
   d. A description of the land application equipment including procedures for calibrating equipment to ensure uniform distribution and appropriate loading rates.
   e. Procedures used to ensure that land application activities address notification requirements, signage requirements, slope restrictions, operation limitations during periods of inclement weather, soil pH requirements, buffer zone requirements, and site restrictions.
   f. Any other information necessary to ensure compliance with the requirements of the Biosolids Program of the VPDES Permit Regulation (9VAC25-31-420 through 720).

Certification

I certify under penalty of law that this document and all attachments were prepared under my direction or supervision in accordance with a system designed to assure that qualified personnel properly gather and evaluate the information submitted. Based on my inquiry of the person or persons who manage the system or those persons directly responsible for gathering the information, the information is, to the best of my knowledge and belief, true, accurate, and complete. I am aware that there are significant penalties for submitting false information, including the possibility of fine and imprisonment for knowing violations.

Name and Official Title J. M. Murray, Colonel, U.S. Marine Corps, Commander MCB Quantico

Signature J. Murray

Telephone number / Email (703) 432-0539 / johnmark.sullivan@usmc.mil

Date signed 24 SEP 2015

(Based on a review of this information, it may be necessary to submit additional information to meet other legal or technical review requirements.)

VPDES PERMIT APPLICATION ADDENDUM

1. **Entity to whom the permit is to be issued:** U.S. Marine Corps - Quantico
   Who will be legally responsible for the wastewater treatment facilities and compliance with the permit? This may or may not be the facility or property owner.

2. **Is this facility located within city or town boundaries?** Yes (No)

3. **Please provide the tax map parcel number for the land where the discharge is located:** 7890-15-0951

4. **For the facility to be covered by this permit, how many acres will be disturbed during the next five years due to new construction activities?** N/A

5. **What is the design average flow of this facility in million gallons per day (MGD)?** 0.14 **(MGD) For industrial facilities, provide the maximum 30-day average production level, include units:** N/A

6. **In addition to the design flow or production level, should the permit be written with limits for any other discharge flow tiers or production levels?** Yes No
   If yes, please identify the other flow tiers in MGD: 0.14
   Please consider the following as you answer the questions in #5 above for both the flow tiers and the production levels (if applicable): Do you plan to expand operations during the next five years? Is your facility's design flow considerably greater than your current flow?

7. **Nature of operations generating wastewater:** US Marine Training Facility

   100 % of flow from domestic connections/sources

   Number of private residences to be served by the treatment works: N/A

   0 % of flow from non-domestic connections/sources

8. **Mode of discharge:** _____ Continuous XX Intermittent _____ Seasonal

   Describe frequency and duration of intermittent and seasonal discharges: _____

   High flow during summer months, low flow for remainder of the year

9. **Identify the characteristics of the receiving stream at the point just above the facility's discharge point(s):**

Stream Characteristic	Outfall Number						
	001						
Permanent stream, never dry							
Intermittent stream, usually flowing, sometimes dry							
Ephemeral stream, wet-weather flow, often dry							
Effluent-dependent stream, usually or always dry							
Lake or pond at or below discharge point							
Other: Class III (non-tidal waters)	XX						

10. **Approval date(s), if applicable:**

O & M Manual _____ **Sludge/Solids Management Plan** _____

Have there been changes in your operation or procedures since the above approval dates? Yes No

11. **Privately Owned Treatment Works:** If this application is for a privately owned treatment works serving, or designed to serve, 50 or more residences, you must include with your application notification from the State Corporation Commission that you are incorporated in the Commonwealth and verification from the SCC that you are in compliance with all regulations and relevant orders of the State Corporation Commission. Incorporated also includes Limited Liability Companies (LLCs), Limited Partnerships (LPs) and certificates of authority.

12. **Please provide a list of Materials stored at the facility. Please complete the table below or attach another page if more room is necessary.**

Material Storage		
Materials Description	Volume Stored	Spill/Stormwater Prevention Measures
Hydrated Lime	three-four 50 lb bags	stored in shed
Dechlorination tablets	one or two buckets	stored in plant
Sodium Hypochlorite (15%)	fifty gallons	double wall container in plant
HTH	twenty lbs.	Stored in Chlorine room

13. **Please provide the name and email addresses for personnel who will be involved with the reissuance of the VPDES permit:**

Name	Title	E-mail Address
Jonmark Sullivan	Water Programs Mgr.	johnmark.sullivan@usmc.mil

14. **Consent to receive Electronic Mail**

The Department of Environmental Quality (DEQ) may deliver permits and certifications (this includes permit issuances, reissuances, modifications, revocation and reissuances, terminations and denials) to recipients, including applicants or permittees, by electronically certified mail where the recipients notify DEQ of their consent to receive mail electronically (§ 10.1-1183). Check *only one* of the following to consent to or decline receipt of electronic mail from DEQ as follows:

☒ Applicant or permittee agrees to receive by electronic mail the permit that may be issued for the proposed pollutant management activity, and to certify receipt of such electronic mail when requested by the DEQ.

If yes, provide email: johnmark.sullivan@usmc.mil, amy.denn@usmc.mil

☐ Applicant or permittee declines to receive by electronic mail the permit that may be issued for the proposed pollutant management activity.

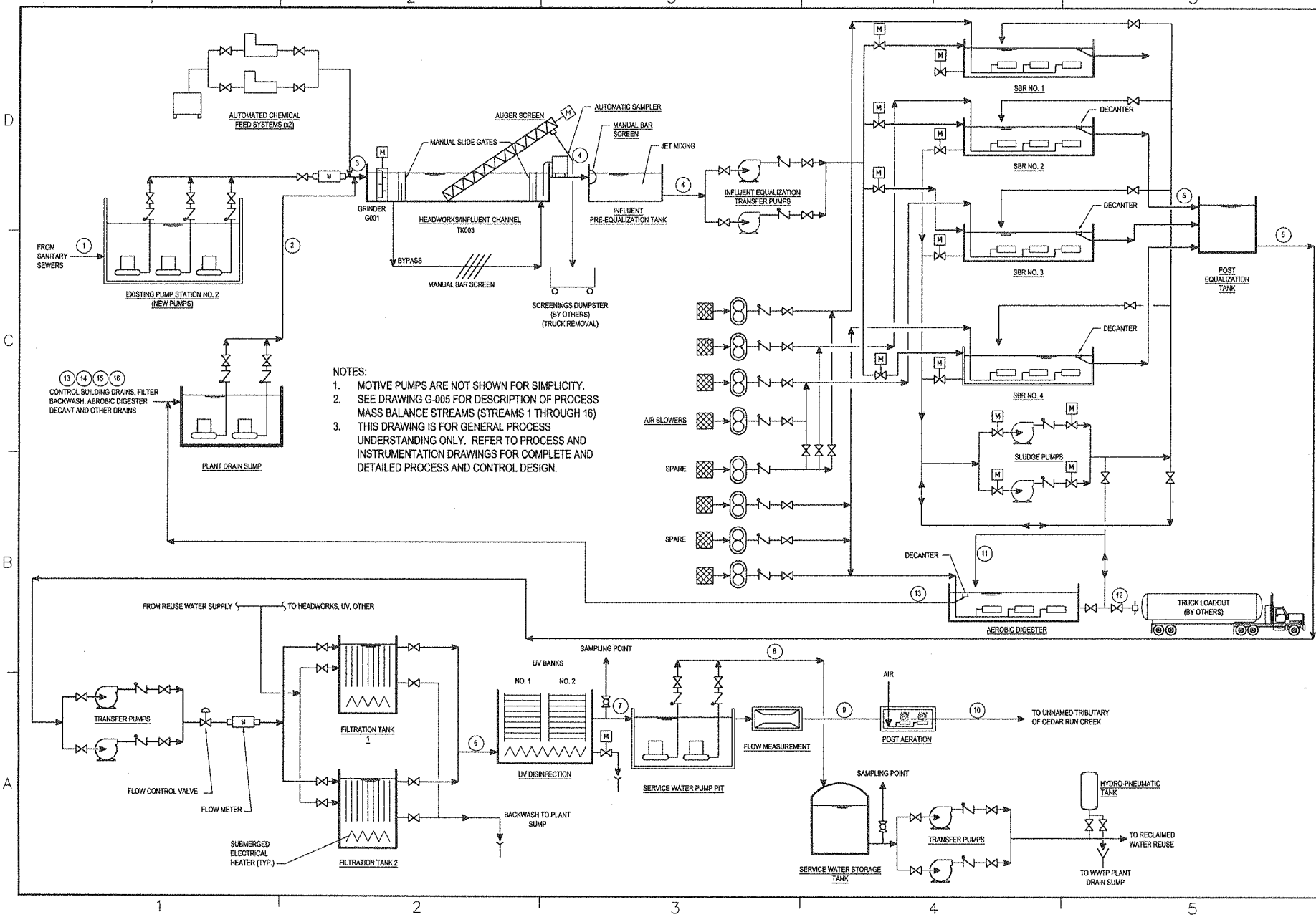

NOTES:

1. MOTIVE PUMPS ARE NOT SHOWN FOR SIMPLICITY.
2. SEE DRAWING G-005 FOR DESCRIPTION OF PROCESS MASS BALANCE STREAMS (STREAMS 1 THROUGH 16)
3. THIS DRAWING IS FOR GENERAL PROCESS UNDERSTANDING ONLY. REFER TO PROCESS AND INSTRUMENTATION DRAWINGS FOR COMPLETE AND DETAILED PROCESS AND CONTROL DESIGN.

NAVFAC

JACOBS
1100 NORTH GLEBE ROAD
SUITE 500
ARLINGTON, VIRGINIA 22201
571.218.1000
FAX: 571.218.1000

DES AD DRW JJW CHK RJR
NBC

DEPARTMENT OF THE NAVY
NAVAL FACILITIES ENGINEERING COMMAND
NAVAL FACILITIES ENGINEERING COMMAND - WASHINGTON
MARINE CORPS BASE QUANTICO
QUANTICO, VIRGINIA
P-543 WASTEWATER TREATMENT PLANT
CAMP UPSHUR
GENERAL PROCESS FLOW DIAGRAM

SCALE: AS NOTED
PROJECT NO.: 653500
CONSTR. CONTR. NO.: N40080-11-0-0491
NAVFAC DRAWING NO.: 13049222
SHEET 3 OF 184
G-003

The information contained in this map is for reference only and is not certified to be absolutely complete or correct.

0 1 2 4 Miles

January 7, 2016 RMS

DEQ
Virginia Department of Environmental Quality