ALEXANDRIA renew ENTERPRISES

FORMERLY ALEXANDRIA SANITATION AUTHORITY

BOARD OF DIRECTORS
John Hill, Chair
Thomas Van Wagner, Vice Chair
William Dickinson, Sec'y-Treas.
Edward Semonian
Matt Ries

CHIEF EXECUTIVE OFFICER
Karen L. Pallansch, P.E., BCEE

GENERAL COUNSEL
McGuire Woods LLP

November 1, 2013

Mr. Douglas Frazier
VPDES Permit Writer, Senior II
Department of Environmental Quality
Northern Virginia Regional Office
13901 Crown Court
Woodbridge, Virginia 22193-1453

Subject: Alexandria Renew Enterprises VPDES #VA0025160 Reapplication Package

Dear Mr. Frazier:

Please find enclosed for your review the original version of our reapplication package for VPDES #VA0025160. A Water Reclamation and Reuse Addendum Application is included with this package. We anticipate that construction of the water reclamation system will be complete in December 2014, following reissuance of our existing VPDES permit, which expires on May 31, 2014.

Should you have any questions or need additional information, please contact me via email at Karen.Pallansch@alexrenew.com or phone at (703) 549-3381 ext. 2202.

Sincerely,

Karen L. Pallansch
Chief Executive Officer
Alexandria Renew Enterprises

VA DEPARTMENT OF ENVIRONMENTAL QUALITY
NORTHERN
NOV 04 2013
REGIONAL OFFICE
WOODBRIDGE, VA

1500 EISENHOWER AVE, ALEXANDRIA, VA 22314
www.alexrenew.com | 703-549-3381
Environment and People – the best of both!

FACILITY NAME AND PERMIT NUMBER:
Alexandria Renew Enterprises VA0025160

Form Approved 1/14/99
OMB Number 2040-0086

BASIC APPLICATION INFORMATION

PART A. BASIC APPLICATION INFORMATION FOR ALL APPLICANTS:

All treatment works must complete questions A.1 through A.8 of this Basic Application Information packet.

A.1. Facility Information.

Facility name: Alexandria Renew Enterprises Water Resources Recovery Facility

Mailing Address: 1500 Eisenhower Avenue, Alexandria, Virginia 22314

Contact person: Adrienne Fancher

Title: Chief Operating Officer

Telephone number: (703) 549-3381

Facility Address (not P.O. Box): 1500 Eisenhower Avenue, Alexandria, Virginia 22314

A.2. Applicant Information. If the applicant is different from the above, provide the following:

Applicant name: City of Alexandria, Virginia, Sanitation Authority, d/b/a Alexandria Renew Enterprises

Mailing Address: Same as above A.1.

Contact person: Same as above A.1.

Title: Same as above A.1.

Telephone number: (703) 549-3381

Is the applicant the owner or operator (or both) of the treatment works?

✓ owner ✓ operator

Indicate whether correspondence regarding this permit should be directed to the facility or the applicant.

✓ facility ____ applicant

A.3. Existing Environmental Permits. Provide the permit number of any existing environmental permits that have been issued to the treatment works (include state-issued permits).

NPDES	VA0025160, VAN010059, VAR051503	PSD	N/A
UIC	N/A	Other	Air Registration: 70701
RCRA	N/A	Other	City of Hopewell, Virginia, Indirect Wastewater Discharge Permit: 6300

A.4. Collection System Information. Provide information on municipalities and areas served by the facility. Provide the name and population of each entity and, if known, provide information on the type of collection system (combined vs. separate) and its ownership (municipal, private, etc.).

Name	Population Served	Type of Collection System	Ownership
Fairfax County	169,000	Separate	Municipal
City of Alexandria	146,000	Separate and Combined	Municipal
Total population served	315,000		

A.5. Indian Country.

a. Is the treatment works located in Indian Country?

_____ Yes ✓ No

b. Does the treatment works discharge to a receiving water that is either in Indian Country or that is upstream from (and eventually flows through) Indian Country?

_____ Yes ✓ No

A.6. Flow. Indicate the design flow rate of the treatment plant (i.e., the wastewater flow rate that the plant was built to handle). Also provide the average daily flow rate and maximum daily flow rate for each of the last three years. Each year's data must be based on a 12-month time period with the 12th month of "this year" occurring no more than three months prior to this application submittal.

a. Design flow rate 54.0 mgd See Additional Information

	Two Years Ago	Last Year	This Year	
b. Annual average daily flow rate	33.3	34.8	35.6	mgd
c. Maximum daily flow rate	75.7	104.5	79.7	mgd

A.7. Collection System. Indicate the type(s) of collection system(s) used by the treatment plant. Check all that apply. Also estimate the percent contribution (by miles) of each. See Additional Information

✓ Separate sanitary sewer 85 %

✓ Combined storm and sanitary sewer 15 %

A.8. Discharges and Other Disposal Methods.

a. Does the treatment works discharge effluent to waters of the U.S.? ✓ Yes _____ No

If yes, list how many of each of the following types of discharge points the treatment works uses:

i. Discharges of treated effluent 2

ii. Discharges of untreated or partially treated effluent 0

iii. Combined sewer overflow points 0

iv. Constructed emergency overflows (prior to the headworks) 2

v. Other _____ 0

b. Does the treatment works discharge effluent to basins, ponds, or other surface impoundments that do not have outlets for discharge to waters of the U.S.? _____ Yes ✓ No

If yes, provide the following for each surface impoundment:

Location: N/A

Annual average daily volume discharged to surface impoundment(s) N/A mgd

Is discharge _____ continuous or _____ intermittent?

c. Does the treatment works land-apply treated wastewater? _____ Yes ✓ No

If yes, provide the following for each land application site:

Location: N/A

Number of acres: N/A

Annual average daily volume applied to site: N/A Mgd

Is land application _____ continuous or _____ intermittent? N/A

d. Does the treatment works discharge or transport treated or untreated wastewater to another treatment works? _____ Yes ✓ No

If yes, describe the mean(s) by which the wastewater from the treatment works is discharged or transported to the other treatment works (e.g., tank truck, pipe).

N/A

If transport is by a party other than the applicant, provide:

Transporter name: N/A

Mailing Address: N/A

Contact person: N/A

Title: N/A

Telephone number:

For each treatment works that receives this discharge, provide the following:

Name: N/A

Mailing Address: N/A

Contact person: N/A

Title: N/A

Telephone number:

If known, provide the NPDES permit number of the treatment works that receives this discharge. N/A

Provide the average daily flow rate from the treatment works into the receiving facility. N/A mgd

e. Does the treatment works discharge or dispose of its wastewater in a manner not included in A.8.a through A.8.d above (e.g., underground percolation, well injection)? ____ Yes ✓ No

If yes, provide the following for each disposal method:

Description of method (including location and size of site(s) if applicable):

N/A

Annual daily volume disposed of by this method: N/A

Is disposal through this method ____ continuous or ____ intermittent? N/A

FACILITY NAME AND PERMIT NUMBER:
Alexandria Renew Enterprises VA0025160

Form Approved 1/14/99
OMB Number 2040-0086

WASTEWATER DISCHARGES:

If you answered "yes" to question A.8.a, complete questions A.9 through A.12 **once for each outfall** (including bypass points) through which effluent is discharged. Do not include information on combined sewer overflows in this section. **If you answered "no" to question A.8.a**, go to Part B, "Additional Application Information for Applicants with a Design Flow Greater than or Equal to 0.1 mgd."

A.9. Description of Outfall.

a. Outfall number 001

b. Location
Alexandria (City or town, if applicable) — 22314 (Zip Code)
N/A (County) — Virginia (State)
N 38 Degrees 47 Minutes 37 Seconds (Latitude) — W 77 Degrees 3 Minutes 26 Seconds (Longitude)

c. Distance from shore (if applicable) 0 ft.

d. Depth below surface (if applicable) N/A ft.

e. Average daily flow rate 34.6 mgd
See Additional Information

f. Does this outfall have either an intermittent or a periodic discharge? ____ Yes ✓ No (go to A.9.g.)

If yes, provide the following information:

Number of times per year discharge occurs: N/A

Average duration of each discharge: N/A

Average flow per discharge: N/A mgd

Months in which discharge occurs: N/A

g. Is outfall equipped with a diffuser? ____ Yes ____ No N/A

A.10. Description of Receiving Waters.

a. Name of receiving water Hunting Creek, then the Potomac River, then into the Chesapeake Bay.

b. Name of watershed (if known) Middle Potomac-Anacostia-Occoquan

United States Soil Conservation Service 14-digit watershed code (if known): 020700100302

c. Name of State Management/River Basin (if known): Potomac River

United States Geological Survey 8-digit hydrologic cataloging unit code (if known): 02070010

d. Critical low flow of receiving stream (if applicable):
acute Tidal cfs chronic Tidal cfs

e. Total hardness of receiving stream at critical low flow (if applicable): N/A mg/l of $CaCO_3$
See Additional Information

FACILITY NAME AND PERMIT NUMBER:
Alexandria Renew Enterprises VA0025160

Form Approved 1/14/99
OMB Number 2040-0086

A.11. Description of Treatment.

a. What levels of treatment are provided? Check all that apply.

✓ Primary ✓ Secondary
✓ Advanced _____ Other. Describe: Enhanced Nutrient Removal

b. Indicate the following removal rates (as applicable):

Design BOD_5 removal or Design $CBOD_5$ removal	97	%
Design SS removal	98	%
Design P removal	97	%
Design N removal	91	%
Other NH3-N	95	%

c. What type of disinfection is used for the effluent from this outfall? If disinfection varies by season, please describe.

Ultraviolet Disinfection

If disinfection is by chlorination, is dechlorination used for this outfall? _____ Yes _____ No N/A

d. Does the treatment plant have post aeration? ✓ Yes _____ No

A.12. Effluent Testing Information. All Applicants that discharge to waters of the US must provide effluent testing data for the following parameters. Provide the indicated effluent testing required by the permitting authority for each outfall through which effluent is discharged. Do not include information on combined sewer overflows in this section. All information reported must be based on data collected through analysis conducted using 40 CFR Part 136 methods. In addition, this data must comply with QA/QC requirements of 40 CFR Part 136 and other appropriate QA/QC requirements for standard methods for analytes not addressed by 40 CFR Part 136. At a minimum, effluent testing data must be based on at least three samples and must be no more than four and one-half years apart.

Outfall number: 001 (See Additional Information)

PARAMETER	MAXIMUM DAILY VALUE		AVERAGE DAILY VALUE		
	Value	Units	Value	Units	Number of Samples
pH (Minimum)	6.5	s.u.			
pH (Maximum)	7.4	s.u.			
Flow Rate	79.7	mgd	33.3	mgd	366
Temperature (Winter)	67	F.	63	F.	89
Temperature (Summer)	85	F.	79	F.	94

* For pH please report a minimum and a maximum daily value

POLLUTANT		MAXIMUM DAILY DISCHARGE		AVERAGE DAILY DISCHARGE			ANALYTICAL METHOD	ML / MDL
		Conc.	Units	Conc.	Units	Number of Samples		
CONVENTIONAL AND NONCONVENTIONAL COMPOUNDS.								
BIOCHEMICAL OXYGEN	BOD-5	N/A	N/A	N/A	N/A	N/A	N/A	N/A
DEMAND (Report one)	CBOD-5	4	mg/L	0	mg/L	366	SM 5210 B	2 mg/L
FECAL COLIFORM		127	#/100 ml	2.2	#/100 ml	366	Colilert-18	1/100 ml
TOTAL SUSPENDED SOLIDS (TSS)		2.1	mg/L	0.7	mg/L	366	SM 2540 D	1 mg/L

END OF PART A.
REFER TO THE APPLICATION OVERVIEW TO DETERMINE WHICH OTHER PARTS OF FORM 2A YOU MUST COMPLETE

FACILITY NAME AND PERMIT NUMBER:
Alexandria Renew Enterprises VA0025160

Form Approved 1/14/99
OMB Number 2040-0086

WASTEWATER DISCHARGES:

If you answered "yes" to question A.8.a, complete questions A.9 through A.12 **once for each outfall** (including bypass points) through which effluent is discharged. Do not include information on combined sewer overflows in this section. **If you answered "no" to question A.8.a**, go to Part B, "Additional Application Information for Applicants with a Design Flow Greater than or Equal to 0.1 mgd."

A.9. Description of Outfall.

a. Outfall number: 002

b. Location: Alexandria (City or town, if applicable); 22314 (Zip Code)
N/A (County); Virginia (State)
N 38 Degrees 47 Minutes 49 Seconds (Latitude); W 77 Degrees 3 Minutes 36 Seconds (Longitude)

c. Distance from shore (if applicable): 0 ft.

d. Depth below surface (if applicable): N/A ft.

e. Average daily flow rate: 0 mgd

f. Does this outfall have either an intermittent or a periodic discharge? ✓ Yes ____ No (go to A.9.g.)

If yes, provide the following information:

Number of times per year discharge occurs: 0 Times - Emergency Use Only

Average duration of each discharge: N/A

Average flow per discharge: N/A mgd

Months in which discharge occurs: N/A

g. Is outfall equipped with a diffuser? ____ Yes ✓ No

A.10. Description of Receiving Waters.

a. Name of receiving water: Hooff's Run, then Hunting Creek, then the Potomac River, then into the Chesapeake Bay.

b. Name of watershed (if known): Middle Potomac-Anacostia-Occoquan

United States Soil Conservation Service 14-digit watershed code (if known): 020700100302

c. Name of State Management/River Basin (if known): Potomac River

United States Geological Survey 8-digit hydrologic cataloging unit code (if known): 02070010

d. Critical low flow of receiving stream (if applicable):
acute Tidal cfs chronic Tidal cfs

e. Total hardness of receiving stream at critical low flow (if applicable): N/A mg/l of $CaCO_3$
See Additional Information

FACILITY NAME AND PERMIT NUMBER:
Alexandria Renew Enterprises VA0025160

Form Approved 1/14/99
OMB Number 2040-0086

A.11. Description of Treatment.

a. What levels of treatment are provided? Check all that apply.

✓ Primary ✓ Secondary
✓ Advanced ____ Other. Describe: Enhanced Nutrient Removal

b. Indicate the following removal rates (as applicable):

Design BOD_5 removal or Design $CBOD_5$ removal	97	%
Design SS removal	98	%
Design P removal	97	%
Design N removal	91	%
Other NH3-N	95	%

c. What type of disinfection is used for the effluent from this outfall? If disinfection varies by season, please describe.

Temporary Chlorination/Dechlorination would be used. No disinfection at this time.

If disinfection is by chlorination, is dechlorination used for this outfall? ✓ Yes ____ No

d. Does the treatment plant have post aeration? ____ Yes ✓ No

A.12. Effluent Testing Information. All Applicants that discharge to waters of the US must provide effluent testing data for the following parameters. Provide the indicated effluent testing required by the permitting authority for each outfall through which effluent is discharged. Do not include information on combined sewer overflows in this section. All information reported must be based on data collected through analysis conducted using 40 CFR Part 136 methods. In addition, this data must comply with QA/QC requirements of 40 CFR Part 136 and other appropriate QA/QC requirements for standard methods for analytes not addressed by 40 CFR Part 136. At a minimum, effluent testing data must be based on at least three samples and must be no more than four and one-half years apart.

Outfall number: 002 (See Additional Information)

PARAMETER	MAXIMUM DAILY VALUE		AVERAGE DAILY VALUE		
	Value	Units	Value	Units	Number of Samples
pH (Minimum)	N/A	s.u.			
pH (Maximum)	N/A	s.u.			
Flow Rate	N/A	N/A	N/A	N/A	N/A
Temperature (Winter)	N/A	N/A	N/A	N/A	N/A
Temperature (Summer)	N/A	N/A	N/A	N/A	N/A

* For pH please report a minimum and a maximum daily value

POLLUTANT		MAXIMUM DAILY DISCHARGE		AVERAGE DAILY DISCHARGE			ANALYTICAL METHOD	ML / MDL
		Conc.	Units	Conc.	Units	Number of Samples		
CONVENTIONAL AND NONCONVENTIONAL COMPOUNDS.								
BIOCHEMICAL OXYGEN	BOD-5	N/A	N/A	N/A	N/A	N/A	N/A	N/A
DEMAND (Report one)	CBOD-5	N/A	N/A	N/A	N/A	N/A	N/A	N/A
FECAL COLIFORM		N/A	N/A	N/A	N/A	N/A	N/A	N/A
TOTAL SUSPENDED SOLIDS (TSS)		N/A	N/A	N/A	N/A	N/A	N/A	N/A

END OF PART A.
REFER TO THE APPLICATION OVERVIEW TO DETERMINE WHICH OTHER PARTS OF FORM 2A YOU MUST COMPLETE

FACILITY NAME AND PERMIT NUMBER:
Alexandria Renew Enterprises VA0025160

Form Approved 1/14/99
OMB Number 2040-0086

WASTEWATER DISCHARGES:

If you answered "yes" to question A.8.a, complete questions A.9 through A.12 **once for each outfall** (including bypass points) through which effluent is discharged. Do not include information on combined sewer overflows in this section. **If you answered "no" to question A.8.a**, go to Part B, "Additional Application Information for Applicants with a Design Flow Greater than or Equal to 0.1 mgd."

A.9. Description of Outfall.

a. Outfall number 016

b. Location
Alexandria (City or town, if applicable) — 22314 (Zip Code)
N/A (County) — Virginia (State)
N 38 Degrees 47 Minutes 51 Seconds (Latitude) — W 77 Degrees 3 Minutes 40 Seconds (Longitude)

c. Distance from shore (if applicable) 2 ft.

d. Depth below surface (if applicable) N/A ft.

e. Average daily flow rate N/A mgd

f. Does this outfall have either an intermittent or a periodic discharge? ✓ Yes ____ No (go to A.9.g.)

If yes, provide the following information:

Number of times per year discharge occurs: (See Additional Information)

Average duration of each discharge: (See Additional Information)

Average flow per discharge: (See Additional Information) mgd

Months in which discharge occurs: (See Additional Information)

g. Is outfall equipped with a diffuser? ____ Yes ✓ No

A.10. Description of Receiving Waters.

a. Name of receiving water Hooff's Run, then Hunting Creek, then the Potomac River, then into the Chesapeake Bay.

b. Name of watershed (if known) Middle Potomac-Anacostia-Occoquan

United States Soil Conservation Service 14-digit watershed code (if known): 020700100302

c. Name of State Management/River Basin (if known): Potomac River

United States Geological Survey 8-digit hydrologic cataloging unit code (if known): 02070010

d. Critical low flow of receiving stream (if applicable):
acute Tidal cfs chronic Tidal cfs

e. Total hardness of receiving stream at critical low flow (if applicable): N/A mg/l of $CaCO_3$

FACILITY NAME AND PERMIT NUMBER:
Alexandria Renew Enterprises VA0025160

Form Approved 1/14/99
OMB Number 2040-0086

A.11. Description of Treatment.

a. What levels of treatment are provided? Check all that apply.

_____ Primary _____ Secondary

_____ Advanced ✓ Other. Describe: None - Constructed emergency overflow prior to plant

b. Indicate the following removal rates (as applicable):

Design BOD_5 removal or Design $CBOD_5$ removal N/A %

Design SS removal N/A %

Design P removal N/A %

Design N removal N/A %

Other NH3-N N/A %

c. What type of disinfection is used for the effluent from this outfall? If disinfection varies by season, please describe.

N/A

If disinfection is by chlorination, is dechlorination used for this outfall? _____ Yes _____ No **N/A**

d. Does the treatment plant have post aeration? _____ Yes _____ No **N/A**

A.12. Effluent Testing Information. All Applicants that discharge to waters of the US must provide effluent testing data for the following parameters. Provide the indicated effluent testing required by the permitting authority for each outfall through which effluent is discharged. Do not include information on combined sewer overflows in this section. All information reported must be based on data collected through analysis conducted using 40 CFR Part 136 methods. In addition, this data must comply with QA/QC requirements of 40 CFR Part 136 and other appropriate QA/QC requirements for standard methods for analytes not addressed by 40 CFR Part 136. At a minimum, effluent testing data must be based on at least three samples and must be no more than four and one-half years apart.

Outfall number: 016 (See Additional Information)

PARAMETER	MAXIMUM DAILY VALUE		AVERAGE DAILY VALUE		
	Value	Units	Value	Units	Number of Samples
pH (Minimum)	N/A	s.u.			
pH (Maximum)	N/A	s.u.			
Flow Rate	N/A	N/A	N/A	N/A	N/A
Temperature (Winter)	N/A	N/A	N/A	N/A	N/A
Temperature (Summer)	N/A	N/A	N/A	N/A	N/A

* For pH please report a minimum and a maximum daily value

POLLUTANT		MAXIMUM DAILY DISCHARGE		AVERAGE DAILY DISCHARGE			ANALYTICAL METHOD	ML / MDL
		Conc.	Units	Conc.	Units	Number of Samples		
CONVENTIONAL AND NONCONVENTIONAL COMPOUNDS.								
BIOCHEMICAL OXYGEN	BOD-5	N/A	N/A	N/A	N/A	N/A	N/A	N/A
DEMAND (Report one)	CBOD-5	N/A	N/A	N/A	N/A	N/A	N/A	N/A
FECAL COLIFORM		N/A	N/A	N/A	N/A	N/A	N/A	N/A
TOTAL SUSPENDED SOLIDS (TSS)		N/A	N/A	N/A	N/A	N/A	N/A	N/A

END OF PART A.
REFER TO THE APPLICATION OVERVIEW TO DETERMINE WHICH OTHER PARTS OF FORM 2A YOU MUST COMPLETE

FACILITY NAME AND PERMIT NUMBER:
Alexandria Renew Enterprises VA0025160

Form Approved 1/14/99
OMB Number 2040-0086

WASTEWATER DISCHARGES:

If you answered "yes" to question A.8.a, complete questions A.9 through A.12 **once for each outfall** (including bypass points) through which effluent is discharged. Do not include information on combined sewer overflows in this section. **If you answered "no" to question A.8.a**, go to Part B, "Additional Application Information for Applicants with a Design Flow Greater than or Equal to 0.1 mgd."

A.9. Description of Outfall.

a. Outfall number 017

b. Location
Alexandria (City or town, if applicable) — 22314 (Zip Code)
N/A (County) — Virginia (State)
N 38 Degrees 50 Minutes 28 Seconds (Latitude) — W 77 Degrees 3 Minutes 21 Seconds (Longitude)

c. Distance from shore (if applicable) 0 ft.

d. Depth below surface (if applicable) 0 ft.

e. Average daily flow rate N/A mgd

f. Does this outfall have either an intermittent or a periodic discharge? ✓ Yes ____ No (go to A.9.g.)

If yes, provide the following information:

Number of times per year discharge occurs: (See Additional Information)

Average duration of each discharge: (See Additional Information)

Average flow per discharge: (See Additional Information) mgd

Months in which discharge occurs: (See Additional Information)

g. Is outfall equipped with a diffuser? ____ Yes ✓ No

A.10. Description of Receiving Waters.

a. Name of receiving water Four Mile Run, then the Potomac River, then into the Chesapeake Bay

b. Name of watershed (if known) Middle Potomac-Anacostia-Occoquan

United States Soil Conservation Service 14-digit watershed code (if known): 020700100302

c. Name of State Management/River Basin (if known): Potomac River

United States Geological Survey 8-digit hydrologic cataloging unit code (if known): 02070010

d. Critical low flow of receiving stream (if applicable):
acute Unknown cfs chronic Unknown cfs

e. Total hardness of receiving stream at critical low flow (if applicable): N/A mg/l of $CaCO_3$

FACILITY NAME AND PERMIT NUMBER:
Alexandria Renew Enterprises VA0025160

Form Approved 1/14/99
OMB Number 2040-0086

A.11. Description of Treatment.

a. What levels of treatment are provided? Check all that apply.

_____ Primary _____ Secondary

_____ Advanced ✓ Other. Describe: (See Additional Information)

b. Indicate the following removal rates (as applicable):

Design BOD_5 removal or Design $CBOD_5$ removal N/A %

Design SS removal N/A %

Design P removal N/A %

Design N removal N/A %

Other NH3-N N/A %

c. What type of disinfection is used for the effluent from this outfall? If disinfection varies by season, please describe.

N/A

If disinfection is by chlorination, is dechlorination used for this outfall? _____ Yes _____ No N/A

d. Does the treatment plant have post aeration? _____ Yes _____ No N/A

A.12. Effluent Testing Information. All Applicants that discharge to waters of the US must provide effluent testing data for the following parameters. Provide the indicated effluent testing required by the permitting authority for each outfall through which effluent is discharged. Do not include information on combined sewer overflows in this section. All information reported must be based on data collected through analysis conducted using 40 CFR Part 136 methods. In addition, this data must comply with QA/QC requirements of 40 CFR Part 136 and other appropriate QA/QC requirements for standard methods for analytes not addressed by 40 CFR Part 136. At a minimum, effluent testing data must be based on at least three samples and must be no more than four and one-half years apart.

Outfall number: 017 (See Additional Information)

PARAMETER	MAXIMUM DAILY VALUE		AVERAGE DAILY VALUE		
	Value	Units	Value	Units	Number of Samples
pH (Minimum)	N/A	s.u.			
pH (Maximum)	N/A	s.u.			
Flow Rate	N/A	N/A	N/A	N/A	N/A
Temperature (Winter)	N/A	N/A	N/A	N/A	N/A
Temperature (Summer)	N/A	N/A	N/A	N/A	N/A

* For pH please report a minimum and a maximum daily value

POLLUTANT		MAXIMUM DAILY DISCHARGE		AVERAGE DAILY DISCHARGE			ANALYTICAL METHOD	ML / MDL
		Conc.	Units	Conc.	Units	Number of Samples		
CONVENTIONAL AND NONCONVENTIONAL COMPOUNDS.								
BIOCHEMICAL OXYGEN	BOD-5	N/A	N/A	N/A	N/A	N/A	N/A	N/A
DEMAND (Report one)	CBOD-5	N/A	N/A	N/A	N/A	N/A	N/A	N/A
FECAL COLIFORM		N/A	N/A	N/A	N/A	N/A	N/A	N/A
TOTAL SUSPENDED SOLIDS (TSS)		N/A	N/A	N/A	N/A	N/A	N/A	N/A

END OF PART A.
REFER TO THE APPLICATION OVERVIEW TO DETERMINE WHICH OTHER PARTS OF FORM 2A YOU MUST COMPLETE

BASIC APPLICATION INFORMATION

PART B. ADDITIONAL APPLICATION INFORMATION FOR APPLICANTS WITH A DESIGN FLOW GREATER THAN OR EQUAL TO 0.1 MGD (100,000 gallons per day).

All applicants with a design flow rate ≥ 0.1 mgd must answer questions B.1 through B.6. All others go to Part C (Certification).

B.1. Inflow and Infiltration. Estimate the average number of gallons per day that flow into the treatment works from inflow and/or infiltration.

3,000,000 gpd

Briefly explain any steps underway or planned to minimize inflow and infiltration.

City and County have existing collection system programs focusing on rehabilitation and reducing I/I.

B.2. Topographic Map. Attach to this application a topographic map of the area extending at least one mile beyond facility property boundaries. This map must show the outline of the facility and the following information. (You may submit more than one map if one map does not show the entire area.)

a. The area surrounding the treatment plant, including all unit processes.

b. The major pipes or other structures through which wastewater enters the treatment works and the pipes or other structures through which treated wastewater is discharged from the treatment plant. Include outfalls from bypass piping, if applicable.

c. Each well where wastewater from the treatment plant is injected underground.

d. Wells, springs, other surface water bodies, and drinking water wells that are: 1) within 1/4 mile of the property boundaries of the treatment works, and 2) listed in public record or otherwise known to the applicant.

e. Any areas where the sewage sludge produced by the treatment works is stored, treated, or disposed.

f. If the treatment works receives waste that is classified as hazardous under the Resource Conservation and Recovery Act (RCRA) by truck, rail, or special pipe, show on the map where that hazardous waste enters the treatment works and where it is treated, stored, and/or disposed.

B.3. Process Flow Diagram or Schematic. Provide a diagram showing the processes of the treatment plant, including all bypass piping and all backup power sources or redundancy in the system. Also provide a water balance showing all treatment units, including disinfection (e.g, chlorination and dechlorination). The water balance must show daily average flow rates at influent and discharge points and approximate daily flow rates between treatment units. Include a brief narrative description of the diagram.

B.4. Operation/Maintenance Performed by Contractor(s).

Are any operational or maintenance aspects (related to wastewater treatment and effluent quality) of the treatment works the responsibility of a contractor? ____Yes ✓ No

If yes, list the name, address, telephone number, and status of each contractor and describe the contractor's responsibilities (attach additional pages if necessary).

Name: N/A

Mailing Address: N/A

Telephone Number: N/A

Responsibilities of Contractor: N/A

B.5. Scheduled Improvements and Schedules of Implementation. Provide information on any uncompleted implementation schedule or uncompleted plans for improvements that will affect the wastewater treatment, effluent quality, or design capacity of the treatment works. If the treatment works has several different implementation schedules or is planning several improvements, submit separate responses to question B.5 for each. (If none, go to question B.6.)

a. List the outfall number (assigned in question A.9) for each outfall that is covered by this implementation schedule.

001, 002

b. Indicate whether the planned improvements or implementation schedule are required by local, State, or Federal agencies.

____Yes ✓ No

c If the answer to B.5.b is "Yes," briefly describe, including new maximum daily inflow rate (if applicable).

Design and construction to meet annual average TN discharge concentration of 3.0 mg/L.

d. Provide dates imposed by any compliance schedule or any actual dates of completion for the implementation steps listed below, as applicable. For improvements planned independently of local, State, or Federal agencies, indicate planned or actual completion dates, as applicable. Indicate dates as accurately as possible.

Implementation Stage	Schedule MM / DD / YYYY	Actual Completion MM / DD / YYYY
– Begin construction	08 / __ / 2010	08 / __ / 2010
– End construction	10 / __ / 2014	__ / __ / ____
– Begin discharge	__ / __ / N/A	__ / __ / ____
– Attain operational level	11 / __ / 2014	__ / __ / ____

e. Have appropriate permits/clearances concerning other Federal/State requirements been obtained? ✓ Yes ___ No

Describe briefly: General permit for nutrient discharges in place. General permit for stormwater discharges from Industrial Facilities.

B.6. EFFLUENT TESTING DATA (GREATER THAN 0.1 MGD ONLY).

Applicants that discharge to waters of the US must provide effluent testing data for the following parameters. Provide the indicated effluent testing required by the permitting authority for each outfall through which effluent is discharged. Do not include information on combined sewer overflows in this section. All information reported must be based on data collected through analysis conducted using 40 CFR Part 136 methods. In addition, this data must comply with QA/QC requirements of 40 CFR Part 136 and other appropriate QA/QC requirements for standard methods for analytes not addressed by 40 CFR Part 136. At a minimum, effluent testing data must be based on at least three pollutant scans and must be no more than four and one-half years old.

Outfall Number: 001 (See Additional Information)

POLLUTANT	MAXIMUM DAILY DISCHARGE		AVERAGE DAILY DISCHARGE			ANALYTICAL METHOD	ML / MDL
	Conc.	Units	Conc.	Units	Number of Samples		
CONVENTIONAL AND NONCONVENTIONAL COMPOUNDS.							
AMMONIA (as N)	1.7	mg/L	0.1	mg/L	366	EPA 350.1	0.01 mg/L
CHLORINE (TOTAL RESIDUAL, TRC)	N/A	N/A	N/A	N/A	N/A	N/A	N/A
DISSOLVED OXYGEN	10.3	mg/L	8.8	mg/L	366	SM 4500- O G	0.2 mg/L
TOTAL KJELDAHL NITROGEN (TKN)	3.0	mg/L	1.1	mg/L	366	EPA 351.2	0.057 mg/L
NITRATE PLUS NITRITE NITROGEN	7.5	mg/L	2.8	mg/L	366	EPA 353.2	0.01 mg/L
OIL and GREASE	10	mg/L	<5.3	mg/L	26	EPA 1664A	5.0 mg/L
PHOSPHORUS (Total)	0.19	mg/L	<0.07	mg/L	366	EPA 365.4	0.01 mg/L
TOTAL DISSOLVED SOLIDS (TDS)	321	mg/L	304	mg/L	3	SM 2540C	5.0 mg/L
OTHER	N/A	N/A	N/A	N/A	N/A	N/A	N/A

END OF PART B.
REFER TO THE APPLICATION OVERVIEW TO DETERMINE WHICH OTHER PARTS OF FORM 2A YOU MUST COMPLETE

FACILITY NAME AND PERMIT NUMBER:

Alexandria Renew Enterprises VA0025160

Form Approved 1/14/99
OMB Number 2040-0086

BASIC APPLICATION INFORMATION

PART C. CERTIFICATION

All applicants must complete the Certification Section. Refer to instructions to determine who is an officer for the purposes of this certification. All applicants must complete all applicable sections of Form 2A, as explained in the Application Overview. Indicate below which parts of Form 2A you have completed and are submitting. By signing this certification statement, applicants confirm that they have reviewed Form 2A and have completed all sections that apply to the facility for which this application is submitted.

Indicate which parts of Form 2A you have completed and are submitting:

✓ Basic Application Information packet

Supplemental Application Information packet:

✓ Part D (Expanded Effluent Testing Data)

✓ Part E (Toxicity Testing: Biomonitoring Data)

✓ Part F (Industrial User Discharges and RCRA/CERCLA Wastes)

✓ Part G (Combined Sewer Systems)

ALL APPLICANTS MUST COMPLETE THE FOLLOWING CERTIFICATION.

I certify under penalty of law that this document and all attachments were prepared under my direction or supervision in accordance with a system designed to assure that qualified personnel properly gather and evaluate the information submitted. Based on my inquiry of the person or persons who manage the system or those persons directly responsible for gathering the information, the information is, to the best of my knowledge and belief, true, accurate, and complete. I am aware that there are significant penalties for submitting false information, including the possibility of fine and imprisonment for knowing violations.

Name and official title: Karen L Pallansch, Chief Executive Officer

Signature: Karen Pallansch

Telephone number: (703) 549-3381

Date signed: 11·1·13

Upon request of the permitting authority, you must submit any other information necessary to assess wastewater treatment practices at the treatment works or identify appropriate permitting requirements.

SEND COMPLETED FORMS TO:

FACILITY NAME AND PERMIT NUMBER:
Alexandria Renew Enterprises VA0025160

Form Approved 1/14/99
OMB Number 2040-0086

SUPPLEMENTAL APPLICATION INFORMATION

PART D. EXPANDED EFFLUENT TESTING DATA

Refer to the directions on the cover page to determine whether this section applies to the treatment works.

Effluent Testing: 1.0 mgd and Pretreatment Treatment Works. If the treatment works has a design flow greater than or equal to 1.0 mgd or it has (or is required to have) a pretreatment program, or is otherwise required by the permitting authority to provide the data, then provide effluent testing data for the following pollutants. Provide the indicated effluent testing information and any other information required by the permitting authority for each outfall through which effluent is discharged. Do not include information on combined sewer overflows in this section. All information reported must be based on data collected through analyses conducted using 40 CFR Part 136 methods. In addition, these data must comply with QA/QC requirements of 40 CFR Part 136 and other appropriate QA/QC requirements for standard methods for analytes not addressed by 40 CFR Part 136. Indicate in the blank rows provided below any data you may have on pollutants not specifically listed in this form. At a minimum, effluent testing data must be based on at least three pollutant scans and must be no more than four and one-half years old.

Outfall number: 001 See Additional Information (Complete once for each outfall discharging effluent to waters of the United States.)

POLLUTANT	MAXIMUM DAILY DISCHARGE				AVERAGE DAILY DISCHARGE					ANALYTICAL METHOD	ML/ MDL
	Conc.	Units	Mass	Units	Conc.	Units	Mass	Units	Number of Samples		
METALS (TOTAL RECOVERABLE), CYANIDE, PHENOLS, AND HARDNESS.											
ANTIMONY	<5	ug/L	N/A	N/A	<5	ug/L	N/A	N/A	17	See Add. Info.	5 ug/L
ARSENIC	<5	ug/L	N/A	N/A	<5	ug/L	N/A	N/A	17	See Add. Info.	5 ug/L
BERYLLIUM	<0.5	ug/L	N/A	N/A	<0.5	ug/L	N/A	N/A	17	See Add. Info.	<0.5 ug/L
CADMIUM	<0.5	ug/L	N/A	N/A	<0.5	ug/L	N/A	N/A	17	See Add. Info.	<0.5 ug/L
CHROMIUM	<2	ug/L	N/A	N/A	<1.8	ug/L	N/A	N/A	17	See Add. Info	2 ug/L
COPPER	21	ug/L	N/A	N/A	8	ug/L	N/A	N/A	17	See Add. Info	2 ug/L
LEAD	<5	ug/L	N/A	N/A	<2.5	ug/L	N/A	N/A	17	See Add. Info	5 ug/L
MERCURY	<0.5	ug/L	N/A	N/A	<0.45	ug/L	N/A	N/A	17	See Add. Info	0.5 ug/L
NICKEL	<5	ug/L	N/A	N/A	<3	ug/L	N/A	N/A	17	See Add. Info	5 ug/L
SELENIUM	<5	ug/L	N/A	N/A	<5	ug/L	N/A	N/A	17	See Add. Info	5 ug/L
SILVER	<1	ug/L	N/A	N/A	<1	ug/L	N/A	N/A	17	See Add. Info	1 ug/L
THALLIUM	<5	ug/L	N/A	N/A	<2.5	ug/L	N/A	N/A	17	See Add. Info	5 ug/L
ZINC	160	ug/L	N/A	N/A	42	ug/L	N/A	N/A	17	See Add. Info	10 ug/L
CYANIDE	<5	ug/L	N/A	N/A	<5	ug/L	N/A	N/A	19	See Add. Info	5 ug/L
TOTAL PHENOLIC COMPOUNDS	20	ug/L	N/A	N/A	<12	ug/L	N/A	N/A	19	EPA 420.4	20 ug/L
HARDNESS (AS $CaCO_3$)	530	mg/L	N/A	N/A	119	mg/L	N/A	N/A	305	See Add. Info	10 mg/L
Use this space (or a separate sheet) to provide information on other metals requested by the permit writer.											

FACILITY NAME AND PERMIT NUMBER:
Alexandria Renew Enterprises VA0025160

Form Approved 1/14/99
OMB Number 2040-0086

Outfall number: 001 (Complete once for each outfall discharging effluent to waters of the United States.)

POLLUTANT	MAXIMUM DAILY DISCHARGE				AVERAGE DAILY DISCHARGE					ANALYTICAL METHOD	ML/ MDL
	Conc.	Units	Mass	Units	Conc.	Units	Mass	Units	Number of Samples		
VOLATILE ORGANIC COMPOUNDS.											
ACROLEIN	<50	ug/L	N/A	N/A	<34	ug/L	N/A	N/A	5	EPA 624	50 ug/L
ACRYLONITRILE	<50	ug/L	N/A	N/A	<34	ug/L	N/A	N/A	5	EPA 624	50 ug/L
BENZENE	<5	ug/L	N/A	N/A	<5	ug/L	N/A	N/A	5	EPA 624	5 ug/L
BROMOFORM	<5	ug/L	N/A	N/A	<5	ug/L	N/A	N/A	5	EPA 624	5 ug/L
CARBON TETRACHLORIDE	<5	ug/L	N/A	N/A	<5	ug/L	N/A	N/A	5	EPA 624	5 ug/L
CLOROBENZENE	<5	ug/L	N/A	N/A	<5	ug/L	N/A	N/A	5	EPA 624	5 ug/L
CHLORODIBROMO-METHANE	<5	ug/L	N/A	N/A	<5	ug/L	N/A	N/A	5	EPA 624	5 ug/L
CHLOROETHANE	<5	ug/L	N/A	N/A	<5	ug/L	N/A	N/A	5	EPA 624	5 ug/L
2-CHLORO-ETHYLVINYL ETHER	<5	ug/L	N/A	N/A	<5	ug/L	N/A	N/A	5	EPA 624	10 ug/L
CHLOROFORM	<5	ug/L	N/A	N/A	<5	ug/L	N/A	N/A	5	EPA 624	5 ug/L
DICHLOROBROMO-METHANE	<5	ug/L	N/A	N/A	<5	ug/L	N/A	N/A	5	EPA 624	5 ug/L
1,1-DICHLOROETHANE	<5	ug/L	N/A	N/A	<5	ug/L	N/A	N/A	5	EPA 624	5 ug/L
1,2-DICHLOROETHANE	<5	ug/L	N/A	N/A	<5	ug/L	N/A	N/A	5	EPA 624	5 ug/L
TRANS-1,2-DICHLORO-ETHYLENE	<5	ug/L	N/A	N/A	<5	ug/L	N/A	N/A	5	EPA 624	5 ug/L
1,1-DICHLOROETHYLENE	<5	ug/L	N/A	N/A	<5	ug/L	N/A	N/A	5	EPA 624	5 ug/L
1,2-DICHLOROPROPANE	<5	ug/L	N/A	N/A	<5	ug/L	N/A	N/A	5	EPA 624	5 ug/L
1,3-DICHLORO-PROPYLENE	<5	ug/L	N/A	N/A	<5	ug/L	N/A	N/A	5	EPA 624	5 ug/L
ETHYLBENZENE	<5	ug/L	N/A	N/A	<5	ug/L	N/A	N/A	5	EPA 624	5 ug/L
METHYL BROMIDE	<5	ug/L	N/A	N/A	<5	ug/L	N/A	N/A	5	EPA 624	5 ug/L
METHYL CHLORIDE	<5	ug/L	N/A	N/A	<5	ug/L	N/A	N/A	5	EPA 624	5 ug/L
METHYLENE CHLORIDE	<5	ug/L	N/A	N/A	<5	ug/L	N/A	N/A	5	EPA 624	5 ug/L
1,1,2,2-TETRACHLORO-ETHANE	<5	ug/L	N/A	N/A	<5	ug/L	N/A	N/A	5	EPA 624	5 ug/L
TETRACHLORO-ETHYLENE	<5	ug/L	N/A	N/A	<5	ug/L	N/A	N/A	5	EPA 624	5 ug/L
TOLUENE	<5	ug/L	N/A	N/A	<5	ug/L	N/A	N/A	5	EPA 624	5 ug/L

FACILITY NAME AND PERMIT NUMBER:
Alexandria Renew Enterprises VA0025160

Form Approved 1/14/99
OMB Number 2040-0086

Outfall number: 001 (Complete once for each outfall discharging effluent to waters of the United States.)

POLLUTANT	MAXIMUM DAILY DISCHARGE				AVERAGE DAILY DISCHARGE					ANALYTICAL METHOD	ML/ MDL
	Conc.	Units	Mass	Units	Conc.	Units	Mass	Units	Number of Samples		
1,1,1-TRICHLOROETHANE	<5	ug/L	N/A	N/A	<5	ug/L	N/A	N/A	5	EPA 624	5 ug/L
1,1,2-TRICHLOROETHANE	<5	ug/L	N/A	N/A	<5	ug/L	N/A	N/A	5	EPA 624	5 ug/L
TRICHLORETHYLENE	<5	ug/L	N/A	N/A	<5	ug/L	N/A	N/A	5	EPA 624	5 ug/L
VINYL CHLORIDE	<5	ug/L	N/A	N/A	<5	ug/L	N/A	N/A	5	EPA 624	5 ug/L
Use this space (or a separate sheet) to provide information on other volatile organic compounds requested by the permit writer.											
ACID-EXTRACTABLE COMPOUNDS											
P-CHLORO-M-CRESOL	<5.1	ug/L	N/A	N/A	<5.0	ug/L	N/A	N/A	5	EPA 625	5.1 ug/L
2-CHLOROPHENOL	<5.1	ug/L	N/A	N/A	<5.0	ug/L	N/A	N/A	5	EPA 625	5.1 ug/L
2,4-DICHLOROPHENOL	<5.1	ug/L	N/A	N/A	<5.0	ug/L	N/A	N/A	5	EPA 625	5.1 ug/L
2,4-DIMETHYLPHENOL	<5.1	ug/L	N/A	N/A	<5.0	ug/L	N/A	N/A	5	EPA 625	5.1 ug/L
4,6-DINITRO-O-CRESOL	<10.2	ug/L	N/A	N/A	<7.1	ug/L	N/A	N/A	5	EPA 625	10.2 ug/L
2,4-DINITROPHENOL	<20	ug/L	N/A	N/A	<14	ug/L	N/A	N/A	5	EPA 625	20 ug/L
2-NITROPHENOL	<5.1	ug/L	N/A	N/A	<5.0	ug/L	N/A	N/A	5	EPA 625	5.1 ug/L
4-NITROPHENOL	<5.1	ug/L	N/A	N/A	<5.0	ug/L	N/A	N/A	5	EPA 625	5.1 ug/L
PENTACHLOROPHENOL	<10.2	ug/L	N/A	N/A	<10.1	ug/L	N/A	N/A	5	EPA 625	10.2 ug/L
PHENOL	<5.1	ug/L	N/A	N/A	<5.0	ug/L	N/A	N/A	5	EPA 625	5.1 ug/L
2,4,6-TRICHLOROPHENOL	<5.1	ug/L	N/A	N/A	<5.0	ug/L	N/A	N/A	5	EPA 625	5.1 ug/L
Use this space (or a separate sheet) to provide information on other acid-extractable compounds requested by the permit writer.											
BASE-NEUTRAL COMPOUNDS.											
ACENAPHTHENE	<5.1	ug/L	N/A	N/A	<5.0	ug/L	N/A	N/A	5	EPA 625	5.1 ug/L
ACENAPHTHYLENE	<5.1	ug/L	N/A	N/A	<5.0	ug/L	N/A	N/A	5	EPA 625	5.1 ug/L
ANTHRACENE	<5.1	ug/L	N/A	N/A	<5.0	ug/L	N/A	N/A	5	EPA 625	5.1 ug/L
BENZIDINE	<5.1	ug/L	N/A	N/A	<5.0	ug/L	N/A	N/A	5	EPA 625	5.1 ug/L
BENZO(A)ANTHRACENE	<5.1	ug/L	N/A	N/A	<5.0	ug/L	N/A	N/A	5	EPA 625	5.1 ug/L
BENZO(A)PYRENE	<5.1	ug/L	N/A	N/A	<5.0	ug/L	N/A	N/A	5	EPA 625	5.1 ug/L

FACILITY NAME AND PERMIT NUMBER:
Alexandria Renew Enterprises VA0025160

Form Approved 1/14/99
OMB Number 2040-0086

Outfall number: 001 (Complete once for each outfall discharging effluent to waters of the United States.)

POLLUTANT	MAXIMUM DAILY DISCHARGE				AVERAGE DAILY DISCHARGE					ANALYTICAL METHOD	ML/ MDL
	Conc.	Units	Mass	Units	Conc.	Units	Mass	Units	Number of Samples		
3,4 BENZO-FLUORANTHENE	<5.1	ug/L	N/A	N/A	<5.0	ug/L	N/A	N/A	5	EPA 625	5.1 ug/L
BENZO(GHI)PERYLENE	<5.1	ug/L	N/A	N/A	<5.0	ug/L	N/A	N/A	5	EPA 625	5.1 ug/L
BENZO(K)FLUORANTHENE	<5.1	ug/L	N/A	N/A	<5.0	ug/L	N/A	N/A	5	EPA 625	5.1 ug/L
BIS (2-CHLOROETHOXY) METHANE	<5.1	ug/L	N/A	N/A	<5.0	ug/L	N/A	N/A	5	EPA 625	5.1 ug/L
BIS (2-CHLOROETHYL)-ETHER	<5.1	ug/L	N/A	N/A	<5.0	ug/L	N/A	N/A	5	EPA 625	5.1 ug/L
BIS (2-CHLOROISO-PROPYL) ETHER	<5.1	ug/L	N/A	N/A	<5.0	ug/L	N/A	N/A	5	EPA 625	5.1 ug/L
BIS (2-ETHYLHEXYL) PHTHALATE	<5.1	ug/L	N/A	N/A	<5.0	ug/L	N/A	N/A	5	EPA 625	5.1 ug/L
4-BROMOPHENYL PHENYL ETHER	<5.1	ug/L	N/A	N/A	<5.0	ug/L	N/A	N/A	5	EPA 625	5.1 ug/L
BUTYL BENZYL PHTHALATE	<5.1	ug/L	N/A	N/A	<5.0	ug/L	N/A	N/A	5	EPA 625	5.1 ug/L
2-CHLORONAPHTHALENE	<5.1	ug/L	N/A	N/A	<5.0	ug/L	N/A	N/A	5	EPA 625	5.1 ug/L
4-CHLORPHENYL PHENYL ETHER	<5.1	ug/L	N/A	N/A	<5.0	ug/L	N/A	N/A	5	EPA 625	5.1 ug/L
CHRYSENE	<5.1	ug/L	N/A	N/A	<5.0	ug/L	N/A	N/A	5	EPA 625	5.1 ug/L
DI-N-BUTYL PHTHALATE	<5.1	ug/L	N/A	N/A	<5.0	ug/L	N/A	N/A	5	EPA 625	5.1 ug/L
DI-N-OCTYL PHTHALATE	<5.1	ug/L	N/A	N/A	<5.0	ug/L	N/A	N/A	5	EPA 625	5.1 ug/L
DIBENZO(A,H) ANTHRACENE	<5.1	ug/L	N/A	N/A	<5.0	ug/L	N/A	N/A	5	EPA 625	5.1 ug/L
1,2-DICHLOROBENZENE	<5.1	ug/L	N/A	N/A	<5.0	ug/L	N/A	N/A	5	See Add. Info	5.1 ug/L
1,3-DICHLOROBENZENE	<5.1	ug/L	N/A	N/A	<5.0	ug/L	N/A	N/A	5	See Add. Info	5.1 ug/L
1,4-DICHLOROBENZENE	<5.1	ug/L	N/A	N/A	<5.0	ug/L	N/A	N/A	5	See Add. Info	5.1 ug/L
3,3-DICHLOROBENZIDINE	<5.1	ug/L	N/A	N/A	<5.0	ug/L	N/A	N/A	5	EPA 625	5.1 ug/L
DIETHYL PHTHALATE	<5.1	ug/L	N/A	N/A	<5.0	ug/L	N/A	N/A	5	EPA 625	5.1 ug/L
DIMETHYL PHTHALATE	<5.1	ug/L	N/A	N/A	<5.0	ug/L	N/A	N/A	5	EPA 625	5.1 ug/L
2,4-DINITROTOLUENE	<5.1	ug/L	N/A	N/A	<5.0	ug/L	N/A	N/A	5	EPA 625	5.1 ug/L
2,6-DINITROTOLUENE	<5.1	ug/L	N/A	N/A	<5.0	ug/L	N/A	N/A	5	EPA 625	5.1 ug/L
1,2-DIPHENYLHYDRAZINE	<5.1	ug/L	N/A	N/A	<5.0	ug/L	N/A	N/A	5	EPA 625	5.1 ug/L

FACILITY NAME AND PERMIT NUMBER:
Alexandria Renew Enterprises VA0025160

Form Approved 1/14/99
OMB Number 2040-0086

Outfall number: 001 (Complete once for each outfall discharging effluent to waters of the United States.)

POLLUTANT	MAXIMUM DAILY DISCHARGE				AVERAGE DAILY DISCHARGE					ANALYTICAL METHOD	ML/ MDL
	Conc.	Units	Mass	Units	Conc.	Units	Mass	Units	Number of Samples		
FLUORANTHENE	<5.1	ug/L	N/A	N/A	<5.0	ug/L	N/A	N/A	5	EPA 625	5.1 ug/L
FLUORENE	<5.1	ug/L	N/A	N/A	<5.0	ug/L	N/A	N/A	5	EPA 625	5.1 ug/L
HEXACHLOROBENZENE	<5.1	ug/L	N/A	N/A	<5.0	ug/L	N/A	N/A	5	EPA 625	5.1 ug/L
HEXACHLOROBUTADIENE	<5.1	ug/L	N/A	N/A	<5.0	ug/L	N/A	N/A	5	EPA 625	5.1 ug/L
HEXACHLOROCYCLO-PENTADIENE	<5.1	ug/L	N/A	N/A	<5.0	ug/L	N/A	N/A	5	EPA 625	5.1 ug/L
HEXACHLOROETHANE	<5.1	ug/L	N/A	N/A	<5.0	ug/L	N/A	N/A	5	EPA 625	5.1 ug/L
INDENO(1,2,3-CD)PYRENE	<5.1	ug/L	N/A	N/A	<5.0	ug/L	N/A	N/A	5	EPA 625	5.1 ug/L
ISOPHORONE	<5.1	ug/L	N/A	N/A	<5.0	ug/L	N/A	N/A	5	EPA 625	5.1 ug/L
NAPHTHALENE	<5.1	ug/L	N/A	N/A	<5.0	ug/L	N/A	N/A	5	EPA 625	5.1 ug/L
NITROBENZENE	<5.1	ug/L	N/A	N/A	<5.0	ug/L	N/A	N/A	5	EPA 625	5.1 ug/L
N-NITROSODI-N-PROPYLAMINE	<5.1	ug/L	N/A	N/A	<5.0	ug/L	N/A	N/A	5	EPA 625	5.1 ug/L
N-NITROSODI- METHYLAMINE	<5.1	ug/L	N/A	N/A	<5.0	ug/L	N/A	N/A	5	EPA 625	5.1 ug/L
N-NITROSODI-PHENYLAMINE	<5.1	ug/L	N/A	N/A	<5.0	ug/L	N/A	N/A	5	EPA 625	5.1 ug/L
PHENANTHRENE	<5.1	ug/L	N/A	N/A	<5.0	ug/L	N/A	N/A	5	EPA 625	5.1 ug/L
PYRENE	<5.1	ug/L	N/A	N/A	<5.0	ug/L	N/A	N/A	5	EPA 625	5.1 ug/L
1,2,4-TRICHLOROBENZENE	<5.1	ug/L	N/A	N/A	<5.0	ug/L	N/A	N/A	5	EPA 625	5.1 ug/L
Use this space (or a separate sheet) to provide information on other base-neutral compounds requested by the permit writer.											
Use this space (or a separate sheet) to provide information on other pollutants (e.g., pesticides) requested by the permit writer.											

END OF PART D.
REFER TO THE APPLICATION OVERVIEW TO DETERMINE WHICH OTHER PARTS OF FORM 2A YOU MUST COMPLETE

FACILITY NAME AND PERMIT NUMBER:
Alexandria Renew Enterprises VA0025160

Form Approved 1/14/99
OMB Number 2040-0086

SUPPLEMENTAL APPLICATION INFORMATION

PART E. TOXICITY TESTING DATA

POTWs meeting one or more of the following criteria must provide the results of whole effluent toxicity tests for acute or chronic toxicity for each of the facility's discharge points: 1) POTWs with a design flow rate greater than or equal to 1.0 mgd; 2) POTWs with a pretreatment program (or those that are required to have one under 40 CFR Part 403); or 3) POTWs required by the permitting authority to submit data for these parameters.

- At a minimum, these results must include quarterly testing for a 12-month period within the past 1 year using multiple species (minimum of two species), or the results from four tests performed at least annually in the four and one-half years prior to the application, provided the results show no appreciable toxicity, and testing for acute and/or chronic toxicity, depending on the range of receiving water dilution. Do not include information on combined sewer overflows in this section. All information reported must be based on data collected through analysis conducted using 40 CFR Part 136 methods. In addition, this data must comply with QA/QC requirements of 40 CFR Part 136 and other appropriate QA/QC requirements for standard methods for analytes not addressed by 40 CFR Part 136.
- In addition, submit the results of any other whole effluent toxicity tests from the past four and one-half years. If a whole effluent toxicity test conducted during the past four and one-half years revealed toxicity, provide any information on the cause of the toxicity or any results of a toxicity reduction evaluation, if one was conducted.
- If you have already submitted any of the information requested in Part E, you need not submit it again. Rather, provide the information requested in question E.4 for previously submitted information. If EPA methods were not used, report the reasons for using alternate methods. If test summaries are available that contain all of the information requested below, they may be submitted in place of Part E.

If no biomonitoring data is required, do not complete Part E. Refer to the Application Overview for directions on which other sections of the form to complete.

E.1. Required Tests.

Indicate the number of whole effluent toxicity tests conducted in the past four and one-half years.

5 chronic ____ acute

E.2. Individual Test Data. Complete the following chart for each whole effluent toxicity test conducted in the last four and one-half years. Allow one column per test (where each species constitutes a test). Copy this page if more than three tests are being reported.

	Test number: 1 (2009)	Test number: 2 (2010)	Test number: 3 (2011)
a. Test information.			
Test species & test method number	Pimephales promelas, 1000.0 Ceriodaphnia dubia, 1002.0	Pimephales promelas, 1000.0 Ceriodaphnia dubia, 1002.0	Pimephales promelas, 1000.0 Ceriodaphnia dubia, 1002.0
Age at initiation of test	<24 Hours	<24 Hours	<24 Hours
Outfall number	001	001	001
Dates sample collected	May 31-June 1, June 2-3, June 4-5, 2009	16 - 17, 18 - 19, 20 - 21, May 2010 and 15 - 16, 17 - 18, 20 - 21 June 2010. Data reported on the last three sample dates.	April 3-4, 5-6, 7-8, 26-27, 28-29, May 1-2, 2011
Date test started	June 16, 2009	June 17, 2010	April 28, 2011
Duration	7 Days	7 Days	7 Days
b. Give toxicity test methods followed.			
Manual title	Short-term Methods for Estimating the Chronic Toxicity of Effluent and Receiving waters to Freshwater Organisms	Short-term Methods for Estimating the Chronic Toxicity of Effluent and Receiving waters to Freshwater Organisms	Short-term Methods for Estimating the Chronic Toxicity of Effluent and Receiving waters to Freshwater Organisms
Edition number and year of publication	4th Edition, 2002	4th Edition, 2002	4th Edition, 2002
Page number(s)	53-140 and 141-196	53-140 and 141-196	53-140 and 141-196
c. Give the sample collection method(s) used. For multiple grab samples, indicate the number of grab samples used.			
24-Hour composite	Yes	Yes	Yes
Grab	No	No	No
d. Indicate where the sample was taken in relation to disinfection. (Check all that apply for each)			
Before disinfection	No	No	No
After disinfection	Yes	Yes	Yes
After dechlorination	N/A	N/A	N/A

FACILITY NAME AND PERMIT NUMBER:
Alexandria Renew Enterprises VA0025160

Form Approved 1/14/99
OMB Number 2040-0086

	Test number: 1 (2009)	Test number: 2 (2010)	Test number: 3 (2011)
e. Describe the point in the treatment process at which the sample was collected.			
Sample was collected:	At outfall after post-aeration	At outfall after post-aeration	At outfall after post-aearation
f. For each test, include whether the test was intended to assess chronic toxicity, acute toxicity, or both.			
Chronic toxicity	Yes	Yes	Yes
Acute toxicity	No	No	No
g. Provide the type of test performed.			
Static	No	No	No
Static-renewal	Yes	Yes	Yes
Flow-through	No	No	No
h. Source of dilution water. If laboratory water, specify type; if receiving water, specify source.			
Laboratory water	Moderately hard synthetic fresh water	Moderately hard synthetic fresh water	Moderately hard synthetic fresh water
Receiving water	N/A	N/A	N/A
i. Type of dilution water. If salt water, specify "natural" or type of artificial sea salts or brine used.			
Fresh water	Yes	Yes	Yes
Salt water	N/A	N/A	N/A
j. Give the percentage effluent used for all concentrations in the test series.			
	11.4 %, 22.8 %, 45.5 %, 91%, and 100%	11.4 %, 22.8 %, 45.5 %, 91%, and 100%	11.4 %, 22.8 %, 45.5 %, 91%, and 100%
	N/A	N/A	N/A
	N/A	N/A	N/A
k. Parameters measured during the test. (State whether parameter meets test method specifications)			
pH	Yes	Yes	Yes
Salinity	No	No	No
Temperature	Yes	Yes	Yes
Ammonia	Yes	Yes	Yes
Dissolved oxygen	Yes	Yes	Yes
l. Test Results.			
Acute:			
Percent survival in 100% effluent	N/A %	N/A %	N/A %
LC_{50}	N/A	N/A	N/A
95% C.I.	N/A %	N/A %	N/A %
Control percent survival	N/A %	N/A %	N/A %
Other (describe)	N/A	N/A	N/A

FACILITY NAME AND PERMIT NUMBER:
Alexandria Renew Enterprises VA0025160

Form Approved 1/14/99
OMB Number 2040-0086

Chronic:			
NOEC	Ceriodaphnia dubia: 100 Pimephales promelas: 100 %	Ceriodaphnia dubia: 100 Pimephales promelas: 100 %	Ceriodaphnia dubia: 100 Pimephales promelas: 100 %
IC_{25}	Ceriodaphnia dubia: >100 Pimephales promelas: >100 %	Ceriodaphnia dubia: >100 Pimephales promelas: >100 %	Ceriodaphnia dubia: >100 Pimephales promelas: >100 %
Control percent survival	Ceriodaphnia dubia: 100 Pimephales promelas: 100 %	Ceriodaphnia dubia: 90 Pimephales promelas: 93 %	Ceriodaphnia dubia: 100 Pimephales promelas: 95 %
Other (describe)	N/A	N/A	N/A

m. Quality Control/Quality Assurance.

Is reference toxicant data available?	Yes	Yes	Yes
Was reference toxicant test within acceptable bounds?	Yes	Yes	
What date was reference toxicant test run (MM/DD/YYYY)?	6/16/09	6/15/10 and 5/10/10	4/5/11 and 4/12/11
Other (describe)	N/A	N/A	N/A

E.3. Toxicity Reduction Evaluation. Is the treatment works involved in a Toxicity Reduction Evaluation?

____Yes ✓ No If yes, describe: _____

E.4. Summary of Submitted Biomonitoring Test Information. If you have submitted biomonitoring test information, or information regarding the cause of toxicity, within the past four and one-half years, provide the dates the information was submitted to the permitting authority and a summary of the results.

Date submitted: _____ (MM/DD/YYYY) Test data was submitted to the Virginia Department of Environmental Quality on July 27, 2009 (for 2009 test data), July 28, 2010 (2010 data), June 7, 2011 (2011 data), June 14, 2012 (2012 data) and August 6, 2013 (2013 data).

Summary of results: (see instructions)

The result of the chronic toxicity tests indicate that the effluent samples were neither acutely nor chronically toxic at the IWC of 91% effluent. The NOEC values for the C.dubia and P.promelas chronic toxicity test are 100% effluent (TUc=1.0).

END OF PART E.
REFER TO THE APPLICATION OVERVIEW TO DETERMINE WHICH OTHER PARTS OF FORM 2A YOU MUST COMPLETE.

FACILITY NAME AND PERMIT NUMBER:
Alexandria Renew Enterprises VA0025160

Form Approved 1/14/99
OMB Number 2040-0086

SUPPLEMENTAL APPLICATION INFORMATION

PART E. TOXICITY TESTING DATA

POTWs meeting one or more of the following criteria must provide the results of whole effluent toxicity tests for acute or chronic toxicity for each of the facility's discharge points: 1) POTWs with a design flow rate greater than or equal to 1.0 mgd; 2) POTWs with a pretreatment program (or those that are required to have one under 40 CFR Part 403); or 3) POTWs required by the permitting authority to submit data for these parameters.

- At a minimum, these results must include quarterly testing for a 12-month period within the past 1 year using multiple species (minimum of two species), or the results from four tests performed at least annually in the four and one-half years prior to the application, provided the results show no appreciable toxicity, and testing for acute and/or chronic toxicity, depending on the range of receiving water dilution. Do not include information on combined sewer overflows in this section. All information reported must be based on data collected through analysis conducted using 40 CFR Part 136 methods. In addition, this data must comply with QA/QC requirements of 40 CFR Part 136 and other appropriate QA/QC requirements for standard methods for analytes not addressed by 40 CFR Part 136.
- In addition, submit the results of any other whole effluent toxicity tests from the past four and one-half years. If a whole effluent toxicity test conducted during the past four and one-half years revealed toxicity, provide any information on the cause of the toxicity or any results of a toxicity reduction evaluation, if one was conducted.
- If you have already submitted any of the information requested in Part E, you need not submit it again. Rather, provide the information requested in question E.4 for previously submitted information. If EPA methods were not used, report the reasons for using alternate methods. If test summaries are available that contain all of the information requested below, they may be submitted in place of Part E.

If no biomonitoring data is required, do not complete Part E. Refer to the Application Overview for directions on which other sections of the form to complete.

E.1. Required Tests.

Indicate the number of whole effluent toxicity tests conducted in the past four and one-half years.

5 chronic ____ acute

E.2. Individual Test Data. Complete the following chart for each whole effluent toxicity test conducted in the last four and one-half years. Allow one column per test (where each species constitutes a test). Copy this page if more than three tests are being reported.

	Test number: 4 (2012)	Test number: 5 (2013)	Test number: _____
a. Test information.			
Test species & test method number	Pimephales promelas, 1000.0 Ceriodaphnia dubia, 1002.0	Pimephales promelas, 1000.0 Ceriodaphnia dubia, 1002.0	
Age at initiation of test	<24 Hours	<24 Hours	
Outfall number	001	001	
Dates sample collected	May 6-7, 8-9, 10-11, 2012	June 23-24, 25-26, 27-28, 2013	
Date test started	May 8, 2012	June 25, 2013	
Duration	7 Days	7 Days	
b. Give toxicity test methods followed.			
Manual title	Short-term Methods for Estimating the Chronic Toxicity of Effluent and Receiving waters to Freshwater Organisms	Short-term Methods for Estimating the Chronic Toxicity of Effluent and Receiving waters to Freshwater Organisms	
Edition number and year of publication	4th Edition, 2002	4th Edition, 2002	
Page number(s)	53-140 and 141-196	53-140 and 141-196	
c. Give the sample collection method(s) used. For multiple grab samples, indicate the number of grab samples used.			
24-Hour composite	Yes	Yes	
Grab	No	No	
d. Indicate where the sample was taken in relation to disinfection. (Check all that apply for each)			
Before disinfection	No	No	
After disinfection	Yes	Yes	
After dechlorination	N/A	N/A	

FACILITY NAME AND PERMIT NUMBER:
Alexandria Renew Enterprises VA0025160

Form Approved 1/14/99
OMB Number 2040-0086

	Test number: 4 (2012)	Test number: 5 (2013)	Test number:
e. Describe the point in the treatment process at which the sample was collected.			
Sample was collected:	At outfall after post-aeration	At outfall after post-aeration	
f. For each test, include whether the test was intended to assess chronic toxicity, acute toxicity, or both.			
Chronic toxicity	Yes	Yes	
Acute toxicity	No	No	
g. Provide the type of test performed.			
Static	No	No	
Static-renewal	Yes	Yes	
Flow-through	No	No	
h. Source of dilution water. If laboratory water, specify type; if receiving water, specify source.			
Laboratory water	Moderately hard synthetic fresh water	Moderately hard synthetic fresh water	
Receiving water	N/A	N/A	
i. Type of dilution water. It salt water, specify "natural" or type of artificial sea salts or brine used.			
Fresh water	Yes	Yes	
Salt water	N/A	N/A	
j. Give the percentage effluent used for all concentrations in the test series.			
	11.4 %, 22.8 %, 45.5 %, 91%, and 100%	11.4 %, 22.8 %, 45.5 %, 91%, and 100%	
	N/A	N/A	
	N/A	N/A	
k. Parameters measured during the test. (State whether parameter meets test method specifications)			
pH	Yes	Yes	
Salinity	No	No	
Temperature	Yes	Yes	
Ammonia	Yes	Yes	
Dissolved oxygen	Yes	Yes	
l. Test Results.			
Acute:			
Percent survival in 100% effluent	N/A %	N/A %	%
LC_{50}	N/A	N/A	
95% C.I.	N/A %	N/A %	%
Control percent survival	N/A %	N/A %	%
Other (describe)	N/A	N/A	

Chronic:					
NOEC	Ceriodaphnia dubia: 100 Pimephales promelas: 100	%	Ceriodaphnia dubia: 100 Pimephales promelas: 100	%	%
IC_{25}	Ceriodaphnia dubia: >100 Pimephales promelas: >100	%	Ceriodaphnia dubia: >100 Pimephales promelas: >100	%	%
Control percent survival	Ceriodaphnia dubia: 100 Pimephales promelas: 98	%	Ceriodaphnia dubia: 100 Pimephales promelas: 98	%	%
Other (describe)	N/A		N/A		

m. Quality Control/Quality Assurance.

Is reference toxicant data available?	Yes	Yes	
Was reference toxicant test within acceptable bounds?	Yes	Yes	
What date was reference toxicant test run (MM/DD/YYYY)?	5/8/12	6/12/13	
Other (describe)	N/A	N/A	

E.3. Toxicity Reduction Evaluation. Is the treatment works involved in a Toxicity Reduction Evaluation?

___Yes ✓ No If yes, describe: _____

E.4. Summary of Submitted Biomonitoring Test Information. If you have submitted biomonitoring test information, or information regarding the cause of toxicity, within the past four and one-half years, provide the dates the information was submitted to the permitting authority and a summary of the results.

Date submitted: _____ (MM/DD/YYYY) Test data was submitted to the Virginia Department of Environmental Quality on July 27, 2009 (for 2009 test data), July 28, 2010 (2010 data), June 7, 2011 (2011 data), June 14, 2012 (2012 data) and August 6, 2013 (2013 data).

Summary of results: (see instructions)

The result of the chronic toxicity tests indicate that the effluent samples were neither acutely nor chronically toxic at the IWC of 91% effluent. The NOEC values for the C.dubia and P.promelas chronic toxicity test are 100% effluent (TUc=1.0).

END OF PART E.
REFER TO THE APPLICATION OVERVIEW TO DETERMINE WHICH OTHER PARTS OF FORM 2A YOU MUST COMPLETE.

FACILITY NAME AND PERMIT NUMBER:
Alexandria Renew Enterprises VA0025160

Form Approved 1/14/99
OMB Number 2040-0086

SUPPLEMENTAL APPLICATION INFORMATION

PART F. INDUSTRIAL USER DISCHARGES AND RCRA/CERCLA WASTES

All treatment works receiving discharges from significant industrial users or which receive RCRA, CERCLA, or other remedial wastes must complete Part F.

GENERAL INFORMATION:

F.1. Pretreatment Program. Does the treatment works have, or is it subject to, an approved pretreatment program?

✓ Yes ___ No

F.2. Number of Significant Industrial Users (SIUs) and Categorical Industrial Users (CIUs). Provide the number of each of the following types of industrial users that discharge to the treatment works.

a. Number of non-categorical SIUs. 6

b. Number of CIUs. 1

SIGNIFICANT INDUSTRIAL USER INFORMATION:

Supply the following information for each SIU. If more than one SIU discharges to the treatment works, copy questions F.3 through F.8 and provide the information requested for each SIU.

F.3. Significant Industrial User Information. Provide the name and address of each SIU discharging to the treatment works. Submit additional pages as necessary.

Name: Delta Electronics (Fairfax County pretreatment permit)

Mailing Address: 5730 General Washington Drive, Alexandria, VA 22312

F.4. Industrial Processes. Describe all of the industrial processes that affect or contribute to the SIU's discharge.

Chromate conversion coating, painting, aluminum chassis, wire harness and pc board assembly.

F.5. Principal Product(s) and Raw Material(s). Describe all of the principal processes and raw materials that affect or contribute to the SIU's discharge.

Principal product(s): N/A

Raw material(s): N/A

F.6. Flow Rate.

a. Process wastewater flow rate. Indicate the average daily volume of process wastewater discharged into the collection system in gallons per day (gpd) and whether the discharge is continuous or intermittent.

2,000 gpd (___ continuous or ✓ intermittent)

b. Non-process wastewater flow rate. Indicate the average daily volume of non-process wastewater flow discharged into the collection system in gallons per day (gpd) and whether the discharge is continuous or intermittent.

N/A gpd (___ continuous or ___ intermittent)

F.7. Pretreatment Standards. Indicate whether the SIU is subject to the following:

a. Local limits ✓ Yes ___ No

b. Categorical pretreatment standards ✓ Yes ___ No

If subject to categorical pretreatment standards, which category and subcategory?

N/A

F.8. Problems at the Treatment Works Attributed to Waste Discharged by the SIU. Has the SIU caused or contributed to any problems (e.g., upsets, interference) at the treatment works in the past three years?

____Yes ✓ No If yes, describe each episode.

RCRA HAZARDOUS WASTE RECEIVED BY TRUCK, RAIL, OR DEDICATED PIPELINE:

F.9. RCRA Waste. Does the treatment works receive or has it in the past three years received RCRA hazardous waste by truck, rail, or dedicated pipe? ____Yes ✓ No (go to F.12.)

F.10. Waste Transport. Method by which RCRA waste is received (check all that apply):

_____Truck _____Rail _____Dedicated Pipe

F.11. Waste Description. Give EPA hazardous waste number and amount (volume or mass, specify units).

EPA Hazardous Waste Number	Amount	Units
N/A		

CERCLA (SUPERFUND) WASTEWATER, RCRA REMEDIATION/CORRECTIVE ACTION WASTEWATER, AND OTHER REMEDIAL ACTIVITY WASTEWATER:

F.12. Remediation Waste. Does the treatment works currently (or has it been notified that it will) receive waste from remedial activities?

____Yes (complete F.13 through F.15.) ✓ No

Provide a list of sites and the requested information (F.13 - F.15.) for each current and future site.

F.13. Waste Origin. Describe the site and type of facility at which the CERCLA/RCRA/or other remedial waste originates (or is expected to originate in the next five years).

N/A

F.14. Pollutants. List the hazardous constituents that are received (or are expected to be received). Include data on volume and concentration, if known. (Attach additional sheets if necessary).

N/A

F.15. Waste Treatment.

a. Is this waste treated (or will it be treated) prior to entering the treatment works?

____Yes ____No

If yes, describe the treatment (provide information about the removal efficiency):

N/A

b. Is the discharge (or will the discharge be) continuous or intermittent?

____Continuous ____Intermittent If intermittent, describe discharge schedule.

END OF PART F.
REFER TO THE APPLICATION OVERVIEW TO DETERMINE WHICH OTHER PARTS OF FORM 2A YOU MUST COMPLETE

FACILITY NAME AND PERMIT NUMBER:
Alexandria Renew Enterprises VA0025160

Form Approved 1/14/99
OMB Number 2040-0086

SUPPLEMENTAL APPLICATION INFORMATION

PART F. INDUSTRIAL USER DISCHARGES AND RCRA/CERCLA WASTES

All treatment works receiving discharges from significant industrial users or which receive RCRA, CERCLA, or other remedial wastes must complete Part F.

GENERAL INFORMATION:

F.1. Pretreatment Program. Does the treatment works have, or is it subject to, an approved pretreatment program?

✓ Yes ___ No

F.2. Number of Significant Industrial Users (SIUs) and Categorical Industrial Users (CIUs). Provide the number of each of the following types of industrial users that discharge to the treatment works.

a. Number of non-categorical SIUs. 6

b. Number of CIUs. 1

SIGNIFICANT INDUSTRIAL USER INFORMATION:

Supply the following information for each SIU. If more than one SIU discharges to the treatment works, copy questions F.3 through F.8 and provide the information requested for each SIU.

F.3. Significant Industrial User Information. Provide the name and address of each SIU discharging to the treatment works. Submit additional pages as necessary.

Name: INOVA Fairfax Hospital (Fairfax County pretreatment permit)

Mailing Address: 5730 General Washington Drive, Alexandria, VA 22312

F.4. Industrial Processes. Describe all of the industrial processes that affect or contribute to the SIU's discharge.

833 bed tertiary care hospital

F.5. Principal Product(s) and Raw Material(s). Describe all of the principal processes and raw materials that affect or contribute to the SIU's discharge.

Principal product(s): N/A

Raw material(s): N/A

F.6. Flow Rate.

a. Process wastewater flow rate. Indicate the average daily volume of process wastewater discharged into the collection system in gallons per day (gpd) and whether the discharge is continuous or intermittent.

156,000 gpd (✓ continuous or ___ intermittent)

b. Non-process wastewater flow rate. Indicate the average daily volume of non-process wastewater flow discharged into the collection system in gallons per day (gpd) and whether the discharge is continuous or intermittent.

N/A gpd (___ continuous or ___ intermittent)

F.7. Pretreatment Standards. Indicate whether the SIU is subject to the following:

a. Local limits ✓ Yes ___ No

b. Categorical pretreatment standards ___ Yes ✓ No

If subject to categorical pretreatment standards, which category and subcategory?

N/A

FACILITY NAME AND PERMIT NUMBER:
Alexandria Renew Enterprises VA0025160

Form Approved 1/14/99
OMB Number 2040-0086

F.8. Problems at the Treatment Works Attributed to Waste Discharged by the SIU. Has the SIU caused or contributed to any problems (e.g., upsets, interference) at the treatment works in the past three years?

____Yes ✓ No If yes, describe each episode.

RCRA HAZARDOUS WASTE RECEIVED BY TRUCK, RAIL, OR DEDICATED PIPELINE:

F.9. RCRA Waste. Does the treatment works receive or has it in the past three years received RCRA hazardous waste by truck, rail, or dedicated pipe? ____Yes ✓ No (go to F.12.)

F.10. Waste Transport. Method by which RCRA waste is received (check all that apply):

_____Truck _____Rail _____Dedicated Pipe

F.11. Waste Description. Give EPA hazardous waste number and amount (volume or mass, specify units).

EPA Hazardous Waste Number	Amount	Units
N/A		

CERCLA (SUPERFUND) WASTEWATER, RCRA REMEDIATION/CORRECTIVE ACTION WASTEWATER, AND OTHER REMEDIAL ACTIVITY WASTEWATER:

F.12. Remediation Waste. Does the treatment works currently (or has it been notified that it will) receive waste from remedial activities?

____Yes (complete F.13 through F.15.) ✓ No

Provide a list of sites and the requested information (F.13 - F.15.) for each current and future site.

F.13. Waste Origin. Describe the site and type of facility at which the CERCLA/RCRA/or other remedial waste originates (or is expected to originate in the next five years).

N/A

F.14. Pollutants. List the hazardous constituents that are received (or are expected to be received). Include data on volume and concentration, if known. (Attach additional sheets if necessary).

N/A

F.15. Waste Treatment.

a. Is this waste treated (or will it be treated) prior to entering the treatment works?

____Yes ____No

If yes, describe the treatment (provide information about the removal efficiency):

N/A

b. Is the discharge (or will the discharge be) continuous or intermittent?

____Continuous ____Intermittent If intermittent, describe discharge schedule.

END OF PART F.
REFER TO THE APPLICATION OVERVIEW TO DETERMINE WHICH OTHER PARTS OF FORM 2A YOU MUST COMPLETE

FACILITY NAME AND PERMIT NUMBER:
Alexandria Renew Enterprises VA0025160

Form Approved 1/14/99
OMB Number 2040-0086

SUPPLEMENTAL APPLICATION INFORMATION

PART F. INDUSTRIAL USER DISCHARGES AND RCRA/CERCLA WASTES

All treatment works receiving discharges from significant industrial users or which receive RCRA, CERCLA, or other remedial wastes must complete Part F.

GENERAL INFORMATION:

F.1. Pretreatment Program. Does the treatment works have, or is it subject to, an approved pretreatment program?

✓ Yes ___ No

F.2. Number of Significant Industrial Users (SIUs) and Categorical Industrial Users (CIUs). Provide the number of each of the following types of industrial users that discharge to the treatment works.

a. Number of non-categorical SIUs. 6

b. Number of CIUs. 1

SIGNIFICANT INDUSTRIAL USER INFORMATION:

Supply the following information for each SIU. If more than one SIU discharges to the treatment works, copy questions F.3 through F.8 and provide the information requested for each SIU.

F.3. Significant Industrial User Information. Provide the name and address of each SIU discharging to the treatment works. Submit additional pages as necessary.

Name: Gannett Publishing Services (Fairfax County pretreatment permit)

Mailing Address: 6885 Commercial Drive, Springfield, VA 22159

F.4. Industrial Processes. Describe all of the industrial processes that affect or contribute to the SIU's discharge.

Publish daily newspaper.

F.5. Principal Product(s) and Raw Material(s). Describe all of the principal processes and raw materials that affect or contribute to the SIU's discharge.

Principal product(s): Newspaper

Raw material(s): N/A

F.6. Flow Rate.

a. Process wastewater flow rate. Indicate the average daily volume of process wastewater discharged into the collection system in gallons per day (gpd) and whether the discharge is continuous or intermittent.

12,200 gpd (✓ continuous or ___ intermittent)

b. Non-process wastewater flow rate. Indicate the average daily volume of non-process wastewater flow discharged into the collection system in gallons per day (gpd) and whether the discharge is continuous or intermittent.

N/A gpd (___ continuous or ___ intermittent)

F.7. Pretreatment Standards. Indicate whether the SIU is subject to the following:

a. Local limits ✓ Yes ___ No

b. Categorical pretreatment standards ___ Yes ✓ No

If subject to categorical pretreatment standards, which category and subcategory?

N/A

EPA Form 3510-2A (Rev. 1-99). Replaces EPA forms 7550-6 & 7550-22.

F.8. Problems at the Treatment Works Attributed to Waste Discharged by the SIU. Has the SIU caused or contributed to any problems (e.g., upsets, interference) at the treatment works in the past three years?

____Yes ✓ No If yes, describe each episode.

RCRA HAZARDOUS WASTE RECEIVED BY TRUCK, RAIL, OR DEDICATED PIPELINE:

F.9. RCRA Waste. Does the treatment works receive or has it in the past three years received RCRA hazardous waste by truck, rail, or dedicated pipe? ____Yes ✓ No (go to F.12.)

F.10. Waste Transport. Method by which RCRA waste is received (check all that apply):

_____Truck _____Rail _____Dedicated Pipe

F.11. Waste Description. Give EPA hazardous waste number and amount (volume or mass, specify units).

EPA Hazardous Waste Number	Amount	Units
N/A		

CERCLA (SUPERFUND) WASTEWATER, RCRA REMEDIATION/CORRECTIVE ACTION WASTEWATER, AND OTHER REMEDIAL ACTIVITY WASTEWATER:

F.12. Remediation Waste. Does the treatment works currently (or has it been notified that it will) receive waste from remedial activities?

____Yes (complete F.13 through F.15.) ✓ No

Provide a list of sites and the requested information (F.13 - F.15.) for each current and future site.

F.13. Waste Origin. Describe the site and type of facility at which the CERCLA/RCRA/or other remedial waste originates (or is expected to originate in the next five years).

N/A

F.14. Pollutants. List the hazardous constituents that are received (or are expected to be received). Include data on volume and concentration, if known. (Attach additional sheets if necessary).

N/A

F.15. Waste Treatment.

a. Is this waste treated (or will it be treated) prior to entering the treatment works?

____Yes ____No

If yes, describe the treatment (provide information about the removal efficiency):

N/A

b. Is the discharge (or will the discharge be) continuous or intermittent?

____Continuous ____Intermittent If intermittent, describe discharge schedule.

END OF PART F.
REFER TO THE APPLICATION OVERVIEW TO DETERMINE WHICH OTHER PARTS OF FORM 2A YOU MUST COMPLETE

FACILITY NAME AND PERMIT NUMBER:
Alexandria Renew Enterprises VA0025160

Form Approved 1/14/99
OMB Number 2040-0086

SUPPLEMENTAL APPLICATION INFORMATION

PART F. INDUSTRIAL USER DISCHARGES AND RCRA/CERCLA WASTES

All treatment works receiving discharges from significant industrial users or which receive RCRA, CERCLA, or other remedial wastes must complete Part F.

GENERAL INFORMATION:

F.1. Pretreatment Program. Does the treatment works have, or is it subject to, an approved pretreatment program?

✓ Yes ___ No

F.2. Number of Significant Industrial Users (SIUs) and Categorical Industrial Users (CIUs). Provide the number of each of the following types of industrial users that discharge to the treatment works.

a. Number of non-categorical SIUs. 6

b. Number of CIUs. 1

SIGNIFICANT INDUSTRIAL USER INFORMATION:

Supply the following information for each SIU. If more than one SIU discharges to the treatment works, copy questions F.3 through F.8 and provide the information requested for each SIU.

F.3. Significant Industrial User Information. Provide the name and address of each SIU discharging to the treatment works. Submit additional pages as necessary.

Name: Washington Post (Fairfax County pretreatment permit)

Mailing Address: 7171 Wimsatt Road, Springfield, VA 22151

F.4. Industrial Processes. Describe all of the industrial processes that affect or contribute to the SIU's discharge.

Publish daily newspaper.

F.5. Principal Product(s) and Raw Material(s). Describe all of the principal processes and raw materials that affect or contribute to the SIU's discharge.

Principal product(s): Newspaper

Raw material(s): N/A

F.6. Flow Rate.

a. Process wastewater flow rate. Indicate the average daily volume of process wastewater discharged into the collection system in gallons per day (gpd) and whether the discharge is continuous or intermittent.

12,000 gpd (___ continuous or ✓ intermittent)

b. Non-process wastewater flow rate. Indicate the average daily volume of non-process wastewater flow discharged into the collection system in gallons per day (gpd) and whether the discharge is continuous or intermittent.

N/A gpd (___ continuous or ___ intermittent)

F.7. Pretreatment Standards. Indicate whether the SIU is subject to the following:

a. Local limits ✓ Yes ___ No

b. Categorical pretreatment standards ___ Yes ✓ No

If subject to categorical pretreatment standards, which category and subcategory?

N/A

EPA Form 3510-2A (Rev. 1-99). Replaces EPA forms 7550-6 & 7550-22.

F.8. Problems at the Treatment Works Attributed to Waste Discharged by the SIU. Has the SIU caused or contributed to any problems (e.g., upsets, interference) at the treatment works in the past three years?

____Yes ✓ No If yes, describe each episode.

RCRA HAZARDOUS WASTE RECEIVED BY TRUCK, RAIL, OR DEDICATED PIPELINE:

F.9. RCRA Waste. Does the treatment works receive or has it in the past three years received RCRA hazardous waste by truck, rail, or dedicated pipe? ____Yes ✓ No (go to F.12.)

F.10. Waste Transport. Method by which RCRA waste is received (check all that apply):

_____Truck _____Rail _____Dedicated Pipe

F.11. Waste Description. Give EPA hazardous waste number and amount (volume or mass, specify units).

EPA Hazardous Waste Number	Amount	Units
N/A		

CERCLA (SUPERFUND) WASTEWATER, RCRA REMEDIATION/CORRECTIVE ACTION WASTEWATER, AND OTHER REMEDIAL ACTIVITY WASTEWATER:

F.12. Remediation Waste. Does the treatment works currently (or has it been notified that it will) receive waste from remedial activities?

____Yes (complete F.13 through F.15.) ✓ No

Provide a list of sites and the requested information (F.13 - F.15.) for each current and future site.

F.13. Waste Origin. Describe the site and type of facility at which the CERCLA/RCRA/or other remedial waste originates (or is expected to originate in the next five years).

N/A

F.14. Pollutants. List the hazardous constituents that are received (or are expected to be received). Include data on volume and concentration, if known. (Attach additional sheets if necessary).

N/A

F.15. Waste Treatment.

a. Is this waste treated (or will it be treated) prior to entering the treatment works?

____Yes ____No

If yes, describe the treatment (provide information about the removal efficiency):

N/A

b. Is the discharge (or will the discharge be) continuous or intermittent?

____Continuous ____Intermittent If intermittent, describe discharge schedule.

END OF PART F.
REFER TO THE APPLICATION OVERVIEW TO DETERMINE WHICH OTHER PARTS OF FORM 2A YOU MUST COMPLETE

FACILITY NAME AND PERMIT NUMBER:
Alexandria Renew Enterprises VA0025160

Form Approved 1/14/99
OMB Number 2040-0086

SUPPLEMENTAL APPLICATION INFORMATION

PART F. INDUSTRIAL USER DISCHARGES AND RCRA/CERCLA WASTES

All treatment works receiving discharges from significant industrial users or which receive RCRA, CERCLA, or other remedial wastes must complete Part F.

GENERAL INFORMATION:

F.1. **Pretreatment Program.** Does the treatment works have, or is it subject to, an approved pretreatment program?

✓ Yes ___ No

F.2. **Number of Significant Industrial Users (SIUs) and Categorical Industrial Users (CIUs).** Provide the number of each of the following types of industrial users that discharge to the treatment works.

a. Number of non-categorical SIUs. 6

b. Number of CIUs. 1

SIGNIFICANT INDUSTRIAL USER INFORMATION:

Supply the following information for each SIU. If more than one SIU discharges to the treatment works, copy questions F.3 through F.8 and provide the information requested for each SIU.

F.3. **Significant Industrial User Information.** Provide the name and address of each SIU discharging to the treatment works. Submit additional pages as necessary.

Name: Alsco, Inc

Mailing Address: 720 South Pickett Street, Alexandria, VA 22304

F.4. **Industrial Processes.** Describe all of the industrial processes that affect or contribute to the SIU's discharge.

Linen & Uniform Service

F.5. **Principal Product(s) and Raw Material(s).** Describe all of the principal processes and raw materials that affect or contribute to the SIU's discharge.

Principal product(s): Laundry that provides linen and uniforms to restaurants, hotels and healthcare

Raw material(s): N/A

F.6. **Flow Rate.**

a. Process wastewater flow rate. Indicate the average daily volume of process wastewater discharged into the collection system in gallons per day (gpd) and whether the discharge is continuous or intermittent.

80,000 gpd (✓ continuous or ___ intermittent)

b. Non-process wastewater flow rate. Indicate the average daily volume of non-process wastewater flow discharged into the collection system in gallons per day (gpd) and whether the discharge is continuous or intermittent.

N/A gpd (___ continuous or ___ intermittent)

F.7. **Pretreatment Standards.** Indicate whether the SIU is subject to the following:

a. Local limits ✓ Yes ___ No

b. Categorical pretreatment standards ___ Yes ✓ No

If subject to categorical pretreatment standards, which category and subcategory?

N/A

F.8. Problems at the Treatment Works Attributed to Waste Discharged by the SIU. Has the SIU caused or contributed to any problems (e.g., upsets, interference) at the treatment works in the past three years?

____Yes ✓ No If yes, describe each episode.

RCRA HAZARDOUS WASTE RECEIVED BY TRUCK, RAIL, OR DEDICATED PIPELINE:

F.9. RCRA Waste. Does the treatment works receive or has it in the past three years received RCRA hazardous waste by truck, rail, or dedicated pipe? ____Yes ✓ No (go to F.12.)

F.10. Waste Transport. Method by which RCRA waste is received (check all that apply):

_____Truck _____Rail _____Dedicated Pipe

F.11. Waste Description. Give EPA hazardous waste number and amount (volume or mass, specify units).

EPA Hazardous Waste Number	Amount	Units
N/A		

CERCLA (SUPERFUND) WASTEWATER, RCRA REMEDIATION/CORRECTIVE ACTION WASTEWATER, AND OTHER REMEDIAL ACTIVITY WASTEWATER:

F.12. Remediation Waste. Does the treatment works currently (or has it been notified that it will) receive waste from remedial activities?

____Yes (complete F.13 through F.15.) ✓ No

Provide a list of sites and the requested information (F.13 - F.15.) for each current and future site.

F.13. Waste Origin. Describe the site and type of facility at which the CERCLA/RCRA/or other remedial waste originates (or is expected to originate in the next five years).

N/A

F.14. Pollutants. List the hazardous constituents that are received (or are expected to be received). Include data on volume and concentration, if known. (Attach additional sheets if necessary).

N/A

F.15. Waste Treatment.

a. Is this waste treated (or will it be treated) prior to entering the treatment works?

____Yes ____No

If yes, describe the treatment (provide information about the removal efficiency):

N/A

b. Is the discharge (or will the discharge be) continuous or intermittent?

____Continuous ____Intermittent If intermittent, describe discharge schedule.

END OF PART F.
REFER TO THE APPLICATION OVERVIEW TO DETERMINE WHICH OTHER PARTS OF FORM 2A YOU MUST COMPLETE

FACILITY NAME AND PERMIT NUMBER:
Alexandria Renew Enterprises VA0025160

Form Approved 1/14/99
OMB Number 2040-0086

SUPPLEMENTAL APPLICATION INFORMATION

PART F. INDUSTRIAL USER DISCHARGES AND RCRA/CERCLA WASTES

All treatment works receiving discharges from significant industrial users or which receive RCRA, CERCLA, or other remedial wastes must complete Part F.

GENERAL INFORMATION:

F.1. Pretreatment Program. Does the treatment works have, or is it subject to, an approved pretreatment program?

✓ Yes ___ No

F.2. Number of Significant Industrial Users (SIUs) and Categorical Industrial Users (CIUs). Provide the number of each of the following types of industrial users that discharge to the treatment works.

a. Number of non-categorical SIUs. 6

b. Number of CIUs. 1

SIGNIFICANT INDUSTRIAL USER INFORMATION:

Supply the following information for each SIU. If more than one SIU discharges to the treatment works, copy questions F.3 through F.8 and provide the information requested for each SIU.

F.3. Significant Industrial User Information. Provide the name and address of each SIU discharging to the treatment works. Submit additional pages as necessary.

Name: INOVA Alexandria Hospital

Mailing Address: 4320 Seminary Road, Alexandria, VA 22304

F.4. Industrial Processes. Describe all of the industrial processes that affect or contribute to the SIU's discharge.

339 bed surgical hospital

F.6. Principal Product(s) and Raw Material(s). Describe all of the principal processes and raw materials that affect or contribute to the SIU's discharge.

Principal product(s): N/A

Raw material(s): N/A

F.6. Flow Rate.

a. Process wastewater flow rate. Indicate the average daily volume of process wastewater discharged into the collection system in gallons per day (gpd) and whether the discharge is continuous or intermittent.

175,000 gpd (✓ continuous or ___ intermittent)

b. Non-process wastewater flow rate. Indicate the average daily volume of non-process wastewater flow discharged into the collection system in gallons per day (gpd) and whether the discharge is continuous or intermittent.

N/A gpd (___ continuous or ___ intermittent)

F.7. Pretreatment Standards. Indicate whether the SIU is subject to the following:

a. Local limits ✓ Yes ___ No

b. Categorical pretreatment standards ___ Yes ✓ No

If subject to categorical pretreatment standards, which category and subcategory?

N/A

F.8. Problems at the Treatment Works Attributed to Waste Discharged by the SIU. Has the SIU caused or contributed to any problems (e.g., upsets, interference) at the treatment works in the past three years?

____Yes ✓ No If yes, describe each episode.

RCRA HAZARDOUS WASTE RECEIVED BY TRUCK, RAIL, OR DEDICATED PIPELINE:

F.9. RCRA Waste. Does the treatment works receive or has it in the past three years received RCRA hazardous waste by truck, rail, or dedicated pipe? ____Yes ✓ No (go to F.12.)

F.10. Waste Transport. Method by which RCRA waste is received (check all that apply):

_____Truck _____Rail _____Dedicated Pipe

F.11. Waste Description. Give EPA hazardous waste number and amount (volume or mass, specify units).

EPA Hazardous Waste Number	Amount	Units
N/A		

CERCLA (SUPERFUND) WASTEWATER, RCRA REMEDIATION/CORRECTIVE ACTION WASTEWATER, AND OTHER REMEDIAL ACTIVITY WASTEWATER:

F.12. Remediation Waste. Does the treatment works currently (or has it been notified that it will) receive waste from remedial activities?

____Yes (complete F.13 through F.15.) ✓ No

Provide a list of sites and the requested information (F.13 - F.15.) for each current and future site.

F.13. Waste Origin. Describe the site and type of facility at which the CERCLA/RCRA/or other remedial waste originates (or is expected to originate in the next five years).

N/A

F.14. Pollutants. List the hazardous constituents that are received (or are expected to be received). Include data on volume and concentration, if known. (Attach additional sheets if necessary).

N/A

F.15. Waste Treatment.

a. Is this waste treated (or will it be treated) prior to entering the treatment works?

____Yes ____No

If yes, describe the treatment (provide information about the removal efficiency):

N/A

b. Is the discharge (or will the discharge be) continuous or intermittent?

____Continuous ____Intermittent If intermittent, describe discharge schedule.

END OF PART F.
REFER TO THE APPLICATION OVERVIEW TO DETERMINE WHICH OTHER PARTS OF FORM 2A YOU MUST COMPLETE

FACILITY NAME AND PERMIT NUMBER:
Alexandria Renew Enterprises VA0025160

Form Approved 1/14/99
OMB Number 2040-0086

SUPPLEMENTAL APPLICATION INFORMATION

PART F. INDUSTRIAL USER DISCHARGES AND RCRA/CERCLA WASTES

All treatment works receiving discharges from significant industrial users or which receive RCRA, CERCLA, or other remedial wastes must complete Part F.

GENERAL INFORMATION:

F.1. Pretreatment Program. Does the treatment works have, or is it subject to, an approved pretreatment program?

✓ Yes ___ No

F.2. Number of Significant Industrial Users (SIUs) and Categorical Industrial Users (CIUs). Provide the number of each of the following types of industrial users that discharge to the treatment works.

a. Number of non-categorical SIUs. 6

b. Number of CIUs. 1

SIGNIFICANT INDUSTRIAL USER INFORMATION:

Supply the following information for each SIU. If more than one SIU discharges to the treatment works, copy questions F.3 through F.8 and provide the information requested for each SIU.

F.3. Significant Industrial User Information. Provide the name and address of each SIU discharging to the treatment works. Submit additional pages as necessary.

Name: Covanta Alexandria/Arlington Inc.

Mailing Address: 5301 Eisenhower Avenue, Alexandria, VA 22304

F.4. Industrial Processes. Describe all of the industrial processes that affect or contribute to the SIU's discharge.

Waste to Energy Facility

F.5. Principal Product(s) and Raw Material(s). Describe all of the principal processes and raw materials that affect or contribute to the SIU's discharge.

Principal product(s): Electricity

Raw material(s): Solid Waste

F.6. Flow Rate.

a. Process wastewater flow rate. Indicate the average daily volume of process wastewater discharged into the collection system in gallons per day (gpd) and whether the discharge is continuous or intermittent.

65,000 gpd (✓ continuous or ___ intermittent)

b. Non-process wastewater flow rate. Indicate the average daily volume of non-process wastewater flow discharged into the collection system in gallons per day (gpd) and whether the discharge is continuous or intermittent.

N/A gpd (___ continuous or ___ intermittent)

F.7. Pretreatment Standards. Indicate whether the SIU is subject to the following:

a. Local limits ✓ Yes ___ No

b. Categorical pretreatment standards ___ Yes ✓ No

If subject to categorical pretreatment standards, which category and subcategory?

N/A

FACILITY NAME AND PERMIT NUMBER:
Alexandria Renew Enterprises VA0025160

Form Approved 1/14/99
OMB Number 2040-0086

F.8. Problems at the Treatment Works Attributed to Waste Discharged by the SIU. Has the SIU caused or contributed to any problems (e.g., upsets, interference) at the treatment works in the past three years?

____Yes ✓ No If yes, describe each episode.

RCRA HAZARDOUS WASTE RECEIVED BY TRUCK, RAIL, OR DEDICATED PIPELINE:

F.9. RCRA Waste. Does the treatment works receive or has it in the past three years received RCRA hazardous waste by truck, rail, or dedicated pipe? ____Yes ✓ No (go to F.12.)

F.10. Waste Transport. Method by which RCRA waste is received (check all that apply):

_____Truck _____Rail _____Dedicated Pipe

F.11. Waste Description. Give EPA hazardous waste number and amount (volume or mass, specify units).

EPA Hazardous Waste Number	Amount	Units
N/A		

CERCLA (SUPERFUND) WASTEWATER, RCRA REMEDIATION/CORRECTIVE ACTION WASTEWATER, AND OTHER REMEDIAL ACTIVITY WASTEWATER:

F.12. Remediation Waste. Does the treatment works currently (or has it been notified that it will) receive waste from remedial activities?

____Yes (complete F.13 through F.15.) ✓ No

Provide a list of sites and the requested information (F.13 - F.15.) for each current and future site.

F.13. Waste Origin. Describe the site and type of facility at which the CERCLA/RCRA/or other remedial waste originates (or is expected to originate in the next five years).

N/A

F.14. Pollutants. List the hazardous constituents that are received (or are expected to be received). Include data on volume and concentration, if known. (Attach additional sheets if necessary).

N/A

F.16. Waste Treatment.

a. Is this waste treated (or will it be treated) prior to entering the treatment works?

____Yes ____No

If yes, describe the treatment (provide information about the removal efficiency):

N/A

b. Is the discharge (or will the discharge be) continuous or intermittent?

____Continuous ____Intermittent If intermittent, describe discharge schedule.

END OF PART F.
REFER TO THE APPLICATION OVERVIEW TO DETERMINE WHICH OTHER PARTS OF FORM 2A YOU MUST COMPLETE

FACILITY NAME AND PERMIT NUMBER:
Alexandria Renew Enterprises VA0025160

Form Approved 1/14/99
OMB Number 2040-0086

SUPPLEMENTAL APPLICATION INFORMATION

PART G. COMBINED SEWER SYSTEMS

Note: City of Alexandria holds the CSO permit for the outfalls. AlexRenew plant receives combined sewer flows from the city

If the treatment works has a combined sewer system, complete Part G.

G.1. System Map. Provide a map indicating the following: (may be included with Basic Application Information)

a. All CSO discharge points.

b. Sensitive use areas potentially affected by CSOs (e.g., beaches, drinking water supplies, shellfish beds, sensitive aquatic ecosystems, and outstanding natural resource waters). N/A

c. Waters that support threatened and endangered species potentially affected by CSOs. N/A

G.2. System Diagram. Provide a diagram, either in the map provided in G.1. or on a separate drawing, of the combined sewer collection system that includes the following information: See Attachment

a. Locations of major sewer trunk lines, both combined and separate sanitary.

b. Locations of points where separate sanitary sewers feed into the combined sewer system.

c. Locations of in-line and off-line storage structures.

d. Locations of flow-regulating devices.

e. Locations of pump stations.

CSO OUTFALLS:

Complete questions G.3 through G.6 once for each CSO discharge point.

G.3. Description of Outfall. ASA does not own outfalls and does not have requested data. See City of Alexandria Permit VA0087068.

a. Outfall number N/A

b. Location N/A
(City or town, if applicable) (Zip Code)

N/A
(County) (State)

N/A
(Latitude) (Longitude)

c. Distance from shore (if applicable) N/A ft.

d. Depth below surface (if applicable) N/A ft.

e. Which of the following were monitored during the last year for this CSO?

____Rainfall ____CSO pollutant concentrations ____CSO frequency

____CSO flow volume ____Receiving water quality

f. How many storm events were monitored during the last year? N/A

G.4. CSO Events.

a. Give the number of CSO events in the last year.

N/A events (___ actual or ___ approx.)

b. Give the average duration per CSO event.

N/A hours (____ actual or ____ approx.)

c. Give the average volume per CSO event.
N/A _____ million gallons (_____ actual or _____ approx.)

d. Give the minimum rainfall that caused a CSO event in the last year.
N/A _____ inches of rainfall

G.5. Description of Receiving Waters.

a. Name of receiving water: N/A

b. Name of watershed/river/stream system: N/A

United States Soil Conservation Service 14-digit watershed code (if known): N/A

c. Name of State Management/River Basin: N/A

United States Geological Survey 8-digit hydrologic cataloging unit code (if known): N/A

G.6. CSO Operations.

Describe any known water quality impacts on the receiving water caused by this CSO (e.g., permanent or intermittent beach closings, permanent or intermittent shell fish bed closings, fish kills, fish advisories, other recreational loss, or violation of any applicable State water quality standard).

N/A

END OF PART G.
REFER TO THE APPLICATION OVERVIEW TO DETERMINE WHICH OTHER PARTS OF FORM 2A YOU MUST COMPLETE.

Additional information, if provided, will appear on the following pages.

Alexandria Renew Enterprises

VPDES Permit Application

VA0025160

NPDES Form 2A Attachments

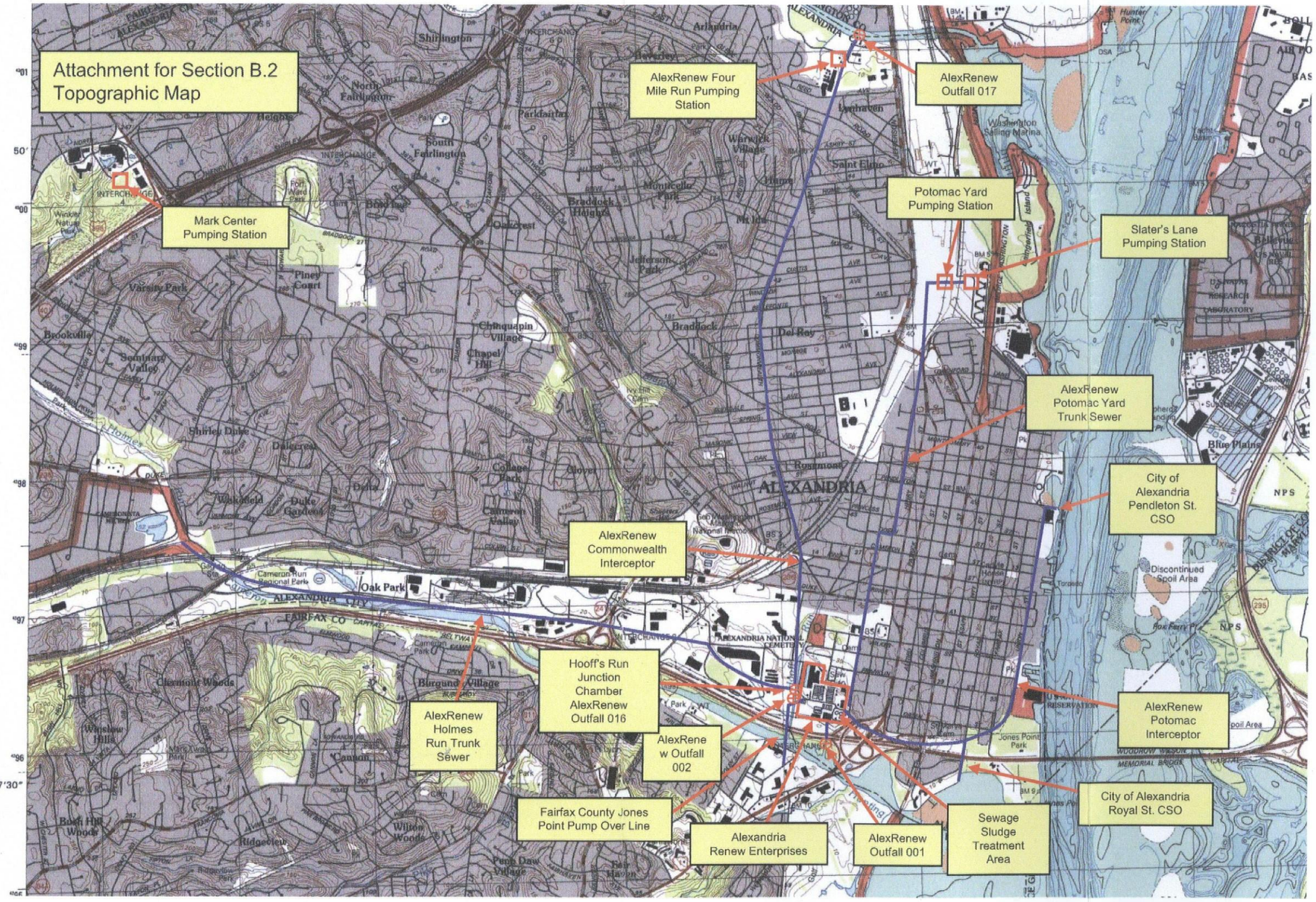
Attachment for Section B.2
Topographic Map
Mark Center Pumping Station
AlexRenew Four Mile Run Pumping Station
AlexRenew Outfall 017
Potomac Yard Pumping Station
Slater's Lane Pumping Station
AlexRenew Potomac Yard Trunk Sewer
City of Alexandria Pendleton St. CSO
AlexRenew Commonwealth Interceptor
Hooff's Run Junction Chamber AlexRenew Outfall 016
AlexRenew Holmes Run Trunk Sewer
AlexRenew Outfall 002
AlexRenew Potomac Interceptor
City of Alexandria Royal St. CSO
Fairfax County Jones Point Pump Over Line
Alexandria Renew Enterprises
AlexRenew Outfall 001
Sewage Sludge Treatment Area
ALEXANDRIA
47'30"

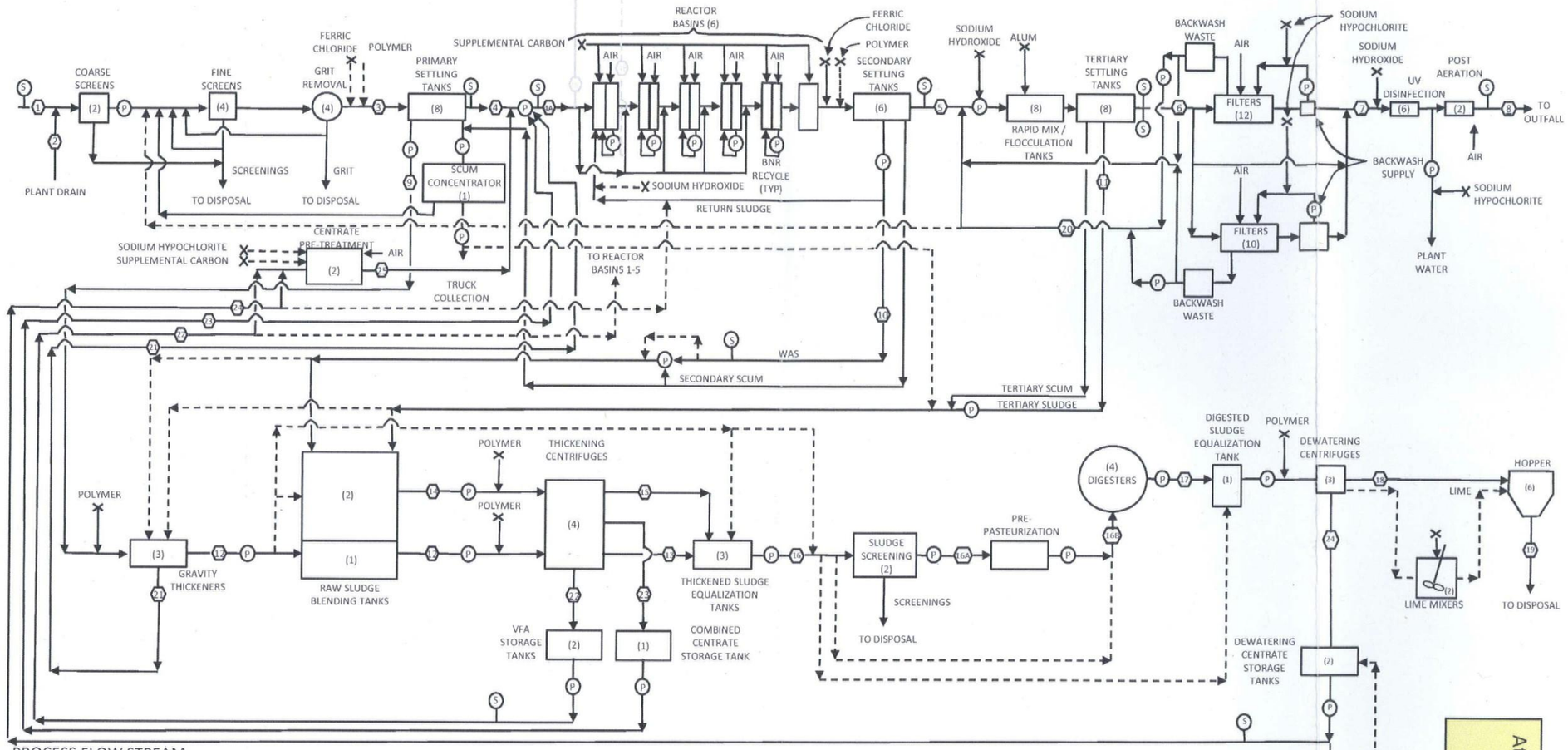

PROCESS FLOW STREAM IDENTIFICATION NUMBER

MAIN PROCESS FLOW STREAMS

1. RAW SEWAGE
2. PLANT DRAIN
3. PRIMARY INFLUENT
4. PRIMARY EFFLUENT
4A. BIOLOGICAL REACTOR BASIN INFLUENT
4B. PRIMARY EFFLUENT TO NMTs OR FROM NMTs TO BRBs
5. SECONDARY EFFLUENT
6. TERTIARY EFFLUENT
7. FILTER EFFLUENT
8. PLANT EFFLUENT

SOLIDS PROCESS FLOW STREAMS

9. PRIMARY SLUDGE
10. WASTE ACTIVATED SLUDGE
11. TERTIARY SLUDGE
12. GRAVITY THICKENED SLUDGE
13. CENTRIFUGE THICKENED PRIMARY SLUDGE
14. BLENDED SLUDGE
15. BLENDED THICKENED SLUDGE
16. DIGESTER FEED SLUDGE
16A. THICKENED SCREENED SLUDGE
16B. PASTEURIZED SLUDGE
17. DIGESTED SLUDGE
18. DEWATERED SLUDGE
19. BIOSOLIDS TO LANDFILL

RECYCLE FLOW STREAMS

20. FILTER BACKWASH
21. GRAVITY THICKENER OVERFLOW
22. VFA RECYCLE
23. THICKENING CENTRATE
24. DEWATERING CENTRATE
25. CENTRATE PRETREATMENT EFFLUENT

LEGEND

- PROCESS FLOW STREAM (X=IDENTIFICATION NUMBER)
- PRIMARY CHEMICAL ADDITION POINTS
- ALTERNATIVE CHEMICAL ADDITION POINT
- ALTERNATIVE PLANT STREAM RECYCLE
- PUMPING SYSTEM
- AUTOMATIC COMPOSITE SAMPLER
- FACILITIES (X=NO. OF UNITS)

Attachment for Section B.3
Process Flow Diagram C
NMF Bypass Mode

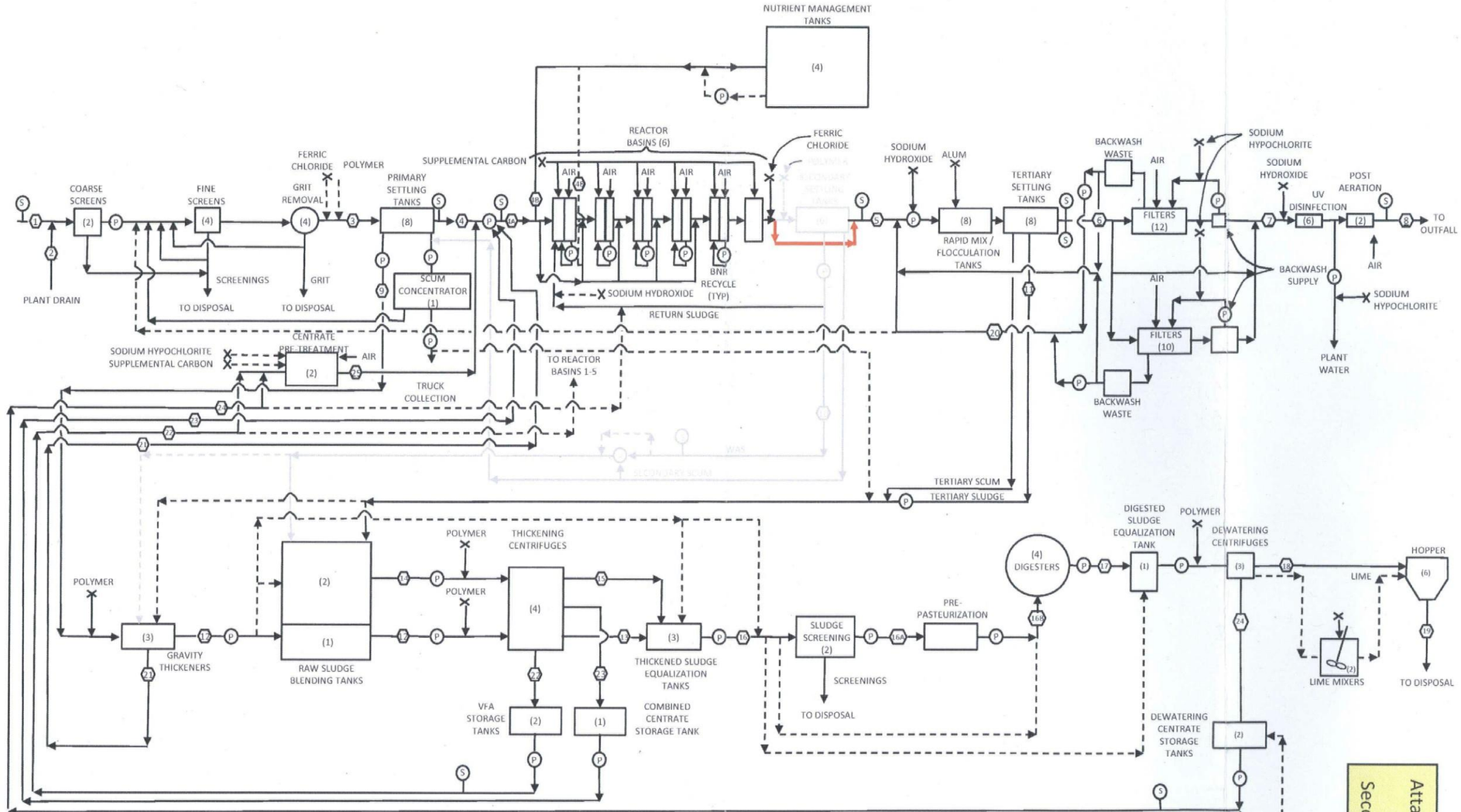

PROCESS FLOW STREAM IDENTIFICATION NUMBER

MAIN PROCESS FLOW STREAMS

1. RAW SEWAGE
2. PLANT DRAIN
3. PRIMARY INFLUENT
4. PRIMARY EFFLUENT
4A. BIOLOGICAL REACTOR BASIN INFLUENT
4B. PRIMARY EFFLUENT TO NMTs OR FROM NMTs TO BRBs
5. SECONDARY EFFLUENT
6. TERTIARY EFFLUENT
7. FILTER EFFLUENT
8. PLANT EFFLUENT

SOLIDS PROCESS FLOW STREAMS

9. PRIMARY SLUDGE
10. WASTE ACTIVATED SLUDGE
11. TERTIARY SLUDGE
12. GRAVITY THICKENED SLUDGE
13. CENTRIFUGE THICKENED PRIMARY SLUDGE
14. BLENDED SLUDGE
15. BLENDED THICKENED SLUDGE
16. DIGESTER FEED SLUDGE
16A. THICKENED SCREENED SLUDGE
16B. PASTEURIZED SLUDGE
17. DIGESTED SLUDGE
18. DEWATERED SLUDGE
19. BIOSOLIDS TO LANDFILL

RECYCLE FLOW STREAMS

20. FILTER BACKWASH
21. GRAVITY THICKENER OVERFLOW
22. VFA RECYCLE
23. THICKENING CENTRATE
24. DEWATERING CENTRATE
25. CENTRATE PRETREATMENT EFFLUENT

LEGEND

- PROCESS FLOW STREAM (X=IDENTIFICATION NUMBER)
- PRIMARY CHEMICAL ADDITION POINTS
- ALTERNATIVE CHEMICAL ADDITION POINT
- ALTERNATIVE PLANT STREAM RECYCLE
- PUMPING SYSTEM
- AUTOMATIC COMPOSITE SAMPLER
- FACILITIES (X=NO. OF UNITS)

Attachment for Section B.3
Process Flow Diagram D
Secondary Settling Tanks Bypass

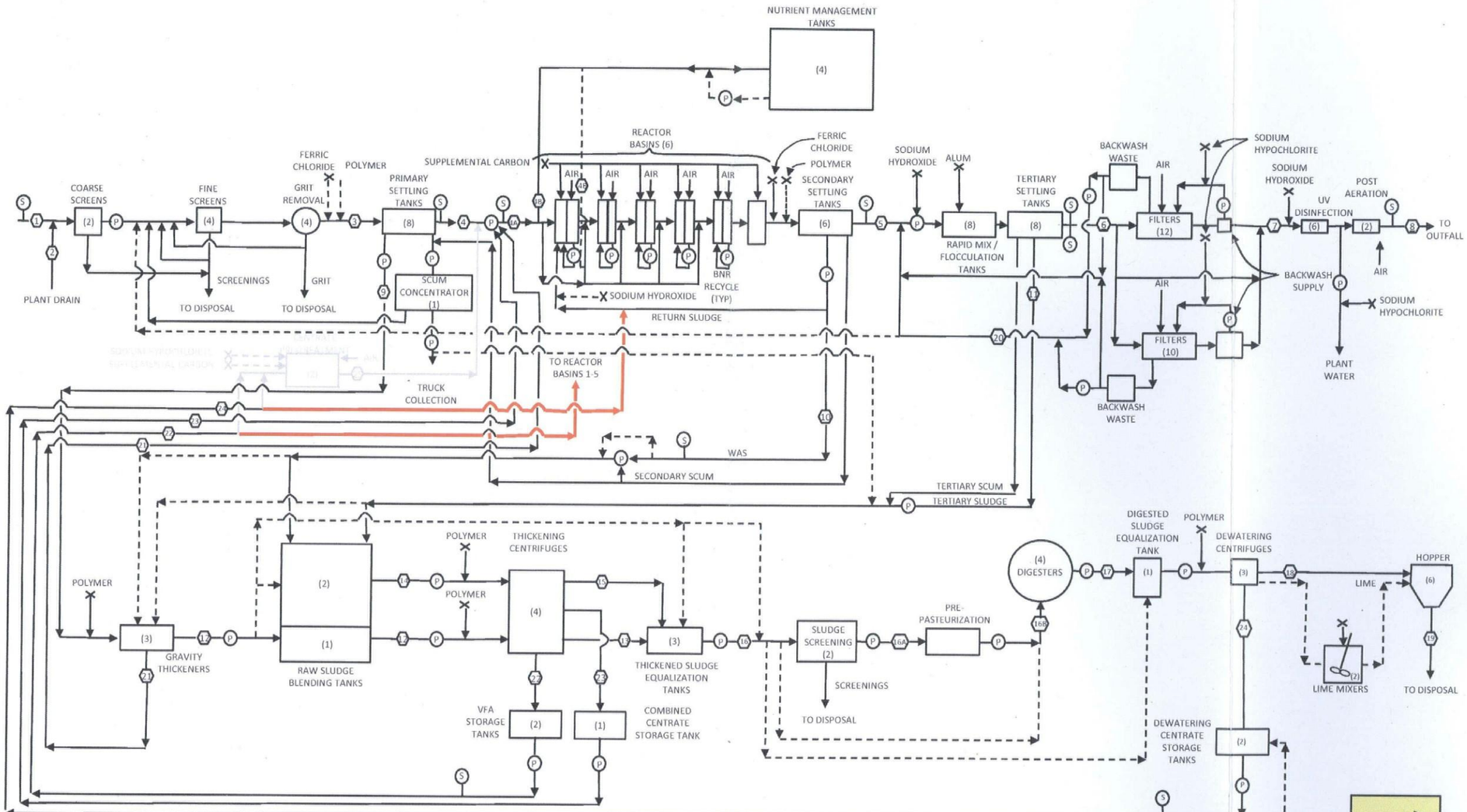

PROCESS FLOW STREAM IDENTIFICATION NUMBER

MAIN PROCESS FLOW STREAMS

1. RAW SEWAGE
2. PLANT DRAIN
3. PRIMARY INFLUENT
4. PRIMARY EFFLUENT

4A. BIOLOGICAL REACTOR BASIN INFLUENT

4B. PRIMARY EFFLUENT TO NMTs OR FROM NMTs TO BRBs

5. SECONDARY EFFLUENT
6. TERTIARY EFFLUENT
7. FILTER EFFLUENT
8. PLANT EFFLUENT

SOLIDS PROCESS FLOW STREAMS

9. PRIMARY SLUDGE
10. WASTE ACTIVATED SLUDGE
11. TERTIARY SLUDGE
12. GRAVITY THICKENED SLUDGE
13. CENTRIFUGE THICKENED PRIMARY SLUDGE
14. BLENDED SLUDGE
15. BLENDED THICKENED SLUDGE
16. DIGESTER FEED SLUDGE

16A. THICKENED SCREENED SLUDGE

16B. PASTEURIZED SLUDGE

17. DIGESTED SLUDGE
18. DEWATERED SLUDGE
19. BIOSOLIDS TO LANDFILL

RECYCLE FLOW STREAMS

20. FILTER BACKWASH
21. GRAVITY THICKENER OVERFLOW
22. VFA RECYCLE
23. THICKENING CENTRATE
24. DEWATERING CENTRATE
25. CENTRATE PRETREATMENT EFFLUENT

LEGEND

- PROCESS FLOW STREAM (X=IDENTIFICATION NUMBER)
- PRIMARY CHEMICAL ADDITION POINTS
- ALTERNATIVE CHEMICAL ADDITION POINT
- PUMPING SYSTEM
- AUTOMATIC COMPOSITE SAMPLER
- FACILITIES (X=NO. OF UNITS)

Attachment for Section B.3
Process Flow Diagram E
CPT Bypass

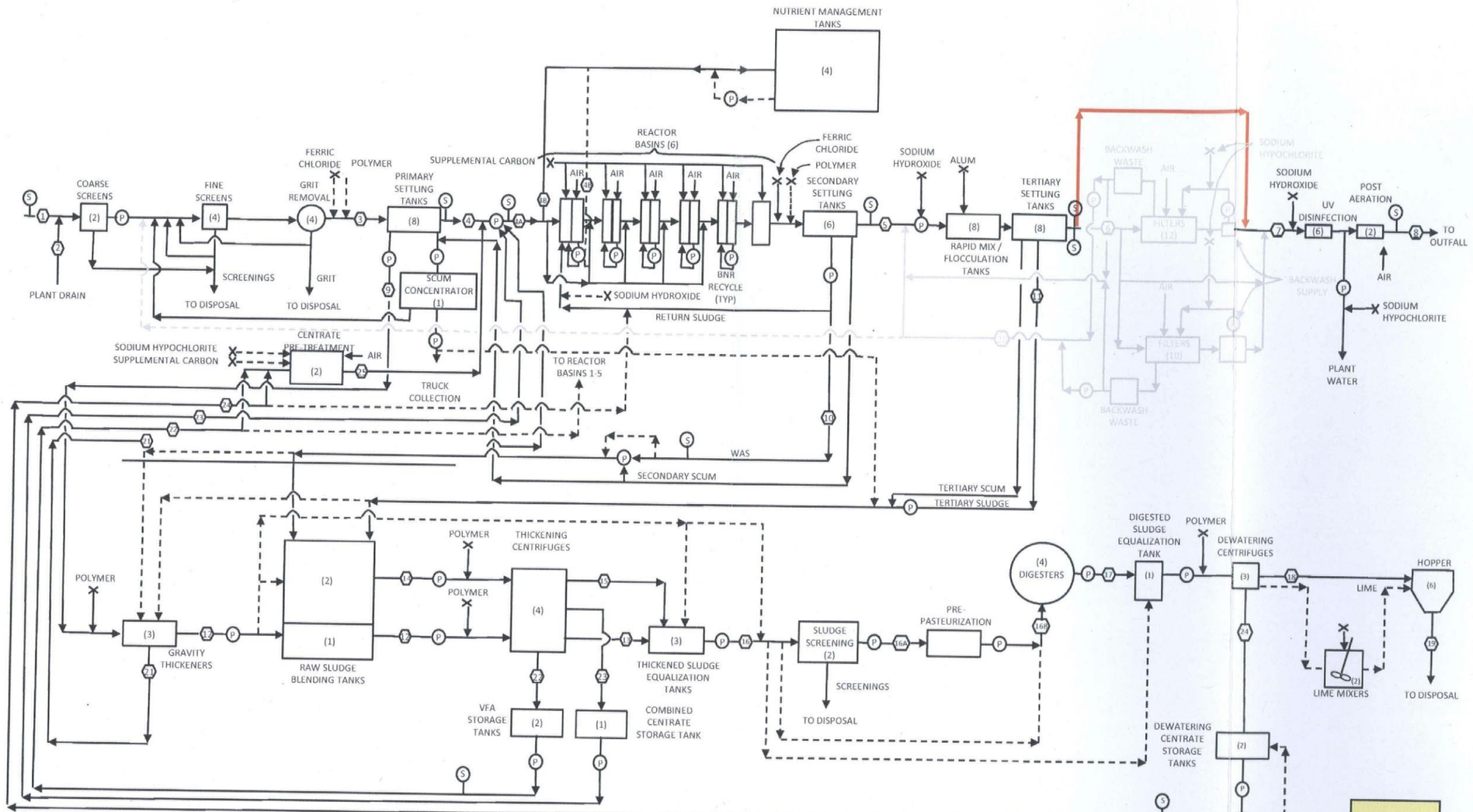

PROCESS FLOW STREAM IDENTIFICATION NUMBER

MAIN PROCESS FLOW STREAMS

1. RAW SEWAGE
2. PLANT DRAIN
3. PRIMARY INFLUENT
4. PRIMARY EFFLUENT

4A. BIOLOGICAL REACTOR BASIN INFLUENT
4B. PRIMARY EFFLUENT TO NMTs OR FROM NMTs TO BRBs

5. SECONDARY EFFLUENT
6. TERTIARY EFFLUENT
7. FILTER EFFLUENT
8. PLANT EFFLUENT

SOLIDS PROCESS FLOW STREAMS

9. PRIMARY SLUDGE
10. WASTE ACTIVATED SLUDGE
11. TERTIARY SLUDGE
12. GRAVITY THICKENED SLUDGE
13. CENTRIFUGE THICKENED PRIMARY SLUDGE
14. BLENDED SLUDGE
15. BLENDED THICKENED SLUDGE
16. DIGESTER FEED SLUDGE

16A. THICKENED SCREENED SLUDGE
16B. PASTEURIZED SLUDGE

17. DIGESTED SLUDGE
18. DEWATERED SLUDGE
19. BIOSOLIDS TO LANDFILL

RECYCLE FLOW STREAMS

20. FILTER BACKWASH
21. GRAVITY THICKENER OVERFLOW
22. VFA RECYCLE
23. THICKENING CENTRATE
24. DEWATERING CENTRATE
25. CENTRATE PRETREATMENT EFFLUENT

LEGEND

- PROCESS FLOW STREAM (X=IDENTIFICATION NUMBER)
- PRIMARY CHEMICAL ADDITION POINTS
- ALTERNATIVE CHEMICAL ADDITION POINT
- PUMPING SYSTEM
- AUTOMATIC COMPOSITE SAMPLER
- FACILITIES (X=NO. OF UNITS)

Attachment for Section B.3
Process Flow Diagram F
Filter Bypass

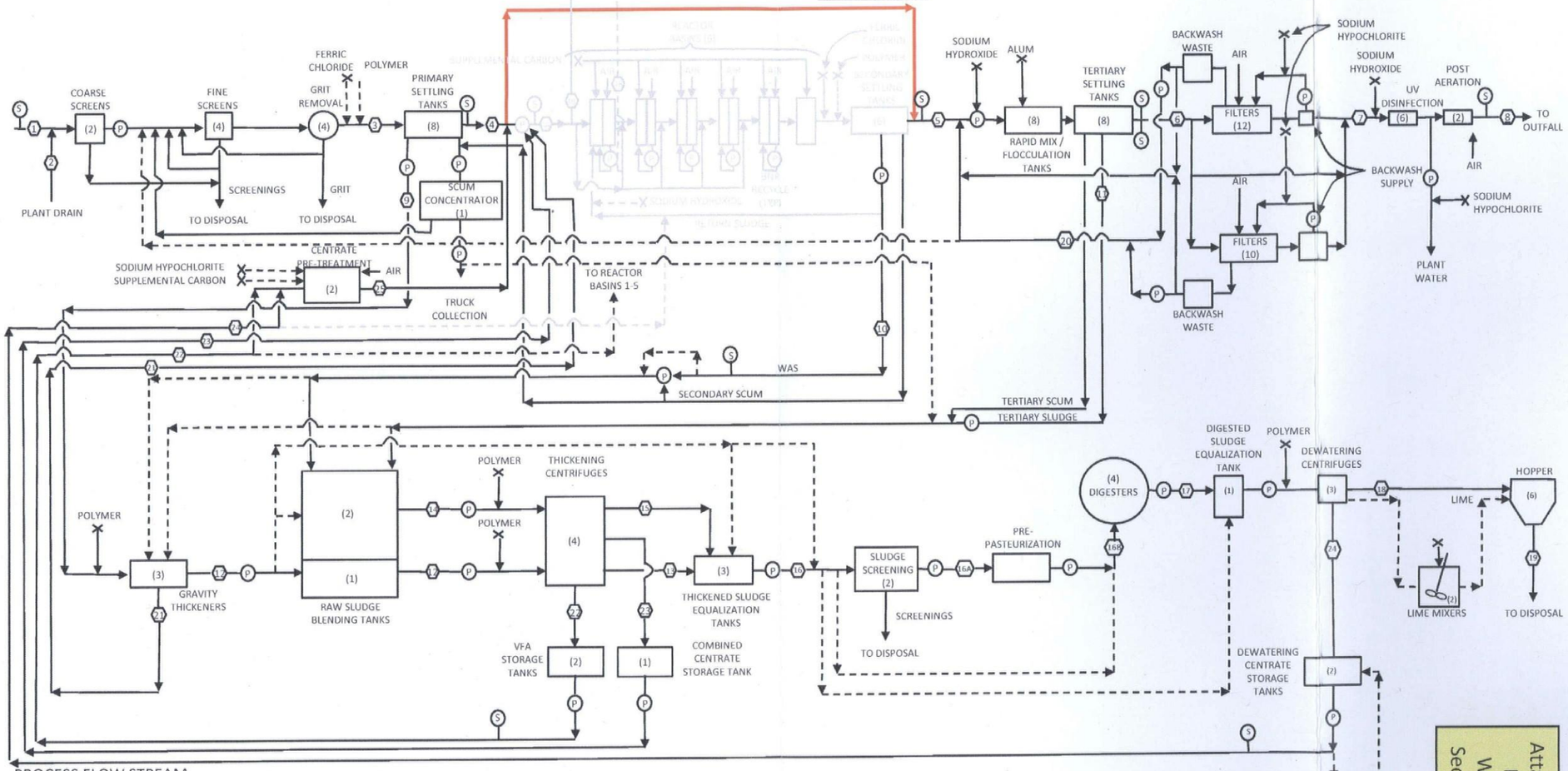

PROCESS FLOW STREAM IDENTIFICATION NUMBER

MAIN PROCESS FLOW STREAMS

1. RAW SEWAGE
2. PLANT DRAIN
3. PRIMARY INFLUENT
4. PRIMARY EFFLUENT
4A. BIOLOGICAL REACTOR BASIN INFLUENT
4B. PRIMARY EFFLUENT TO NMTs OR FROM NMTs TO BRBs
5. SECONDARY EFFLUENT
6. TERTIARY EFFLUENT
7. FILTER EFFLUENT
8. PLANT EFFLUENT

SOLIDS PROCESS FLOW STREAMS

9. PRIMARY SLUDGE
10. WASTE ACTIVATED SLUDGE
11. TERTIARY SLUDGE
12. GRAVITY THICKENED SLUDGE
13. CENTRIFUGE THICKENED PRIMARY SLUDGE
14. BLENDED SLUDGE
15. BLENDED THICKENED SLUDGE
16. DIGESTER FEED SLUDGE
16A. THICKENED SCREENED SLUDGE
16B. PASTEURIZED SLUDGE
17. DIGESTED SLUDGE
18. DEWATERED SLUDGE
19. BIOSOLIDS TO LANDFILL

RECYCLE FLOW STREAMS

20. FILTER BACKWASH
21. GRAVITY THICKENER OVERFLOW
22. VFA RECYCLE
23. THICKENING CENTRATE
24. DEWATERING CENTRATE
25. CENTRATE PRETREATMENT EFFLUENT

LEGEND

- PROCESS FLOW STREAM (X=IDENTIFICATION NUMBER)
- PRIMARY CHEMICAL ADDITION POINTS
- ALTERNATIVE CHEMICAL ADDITION POINT
- ALTERNATIVE PLANT STREAM RECYCLE
- PUMPING SYSTEM
- AUTOMATIC COMPOSITE SAMPLER
- FACILITIES (X=NO. OF UNITS)

Attachment for Section B.3
Process Flow Diagram G
Wet Weather Treatment –
Secondary Treatment Bypass

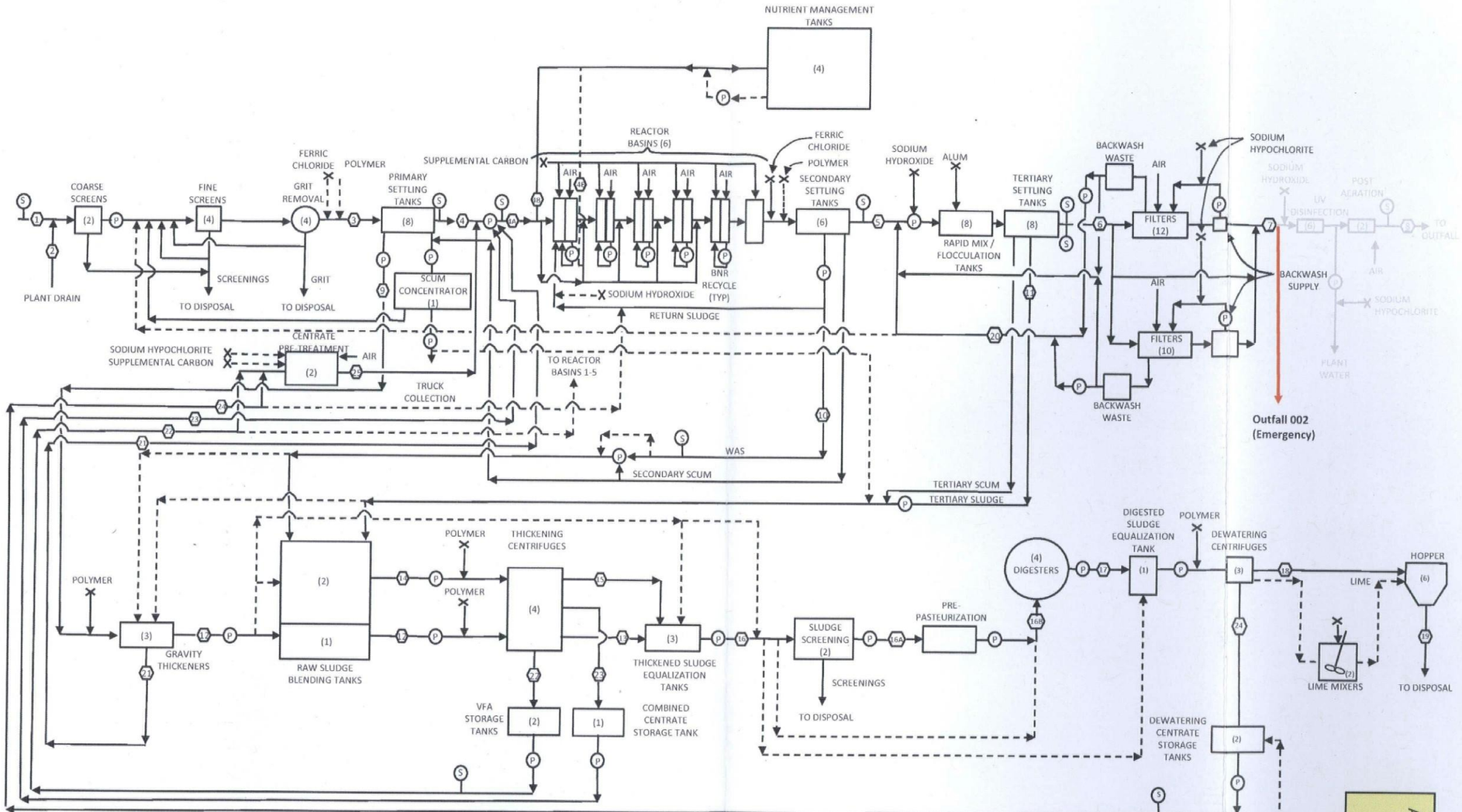

PROCESS FLOW STREAM IDENTIFICATION NUMBER

MAIN PROCESS FLOW STREAMS

1. RAW SEWAGE
2. PLANT DRAIN
3. PRIMARY INFLUENT
4. PRIMARY EFFLUENT

4A. BIOLOGICAL REACTOR BASIN INFLUENT

4B. PRIMARY EFFLUENT TO NMTs OR FROM NMTs TO BRBs

5. SECONDARY EFFLUENT
6. TERTIARY EFFLUENT
7. FILTER EFFLUENT
8. PLANT EFFLUENT

SOLIDS PROCESS FLOW STREAMS

9. PRIMARY SLUDGE
10. WASTE ACTIVATED SLUDGE
11. TERTIARY SLUDGE
12. GRAVITY THICKENED SLUDGE
13. CENTRIFUGE THICKENED PRIMARY SLUDGE
14. BLENDED SLUDGE
15. BLENDED THICKENED SLUDGE
16. DIGESTER FEED SLUDGE

16A. THICKENED SCREENED SLUDGE

16B. PASTEURIZED SLUDGE

17. DIGESTED SLUDGE
18. DEWATERED SLUDGE
19. BIOSOLIDS TO LANDFILL

RECYCLE FLOW STREAMS

20. FILTER BACKWASH
21. GRAVITY THICKENER OVERFLOW
22. VFA RECYCLE
23. THICKENING CENTRATE
24. DEWATERING CENTRATE
25. CENTRATE PRETREATMENT EFFLUENT

LEGEND

- PROCESS FLOW STREAM (X=IDENTIFICATION NUMBER)
- PRIMARY CHEMICAL ADDITION POINTS
- ALTERNATIVE CHEMICAL ADDITION POINT
- ALTERNATIVE PLANT STREAM RECYCLE
- PUMPING SYSTEM
- AUTOMATIC COMPOSITE SAMPLER
- FACILITIES (X=NO. OF UNITS)

Attachment for Section B.3
Process Flow Diagram H
Disinfection Bypass

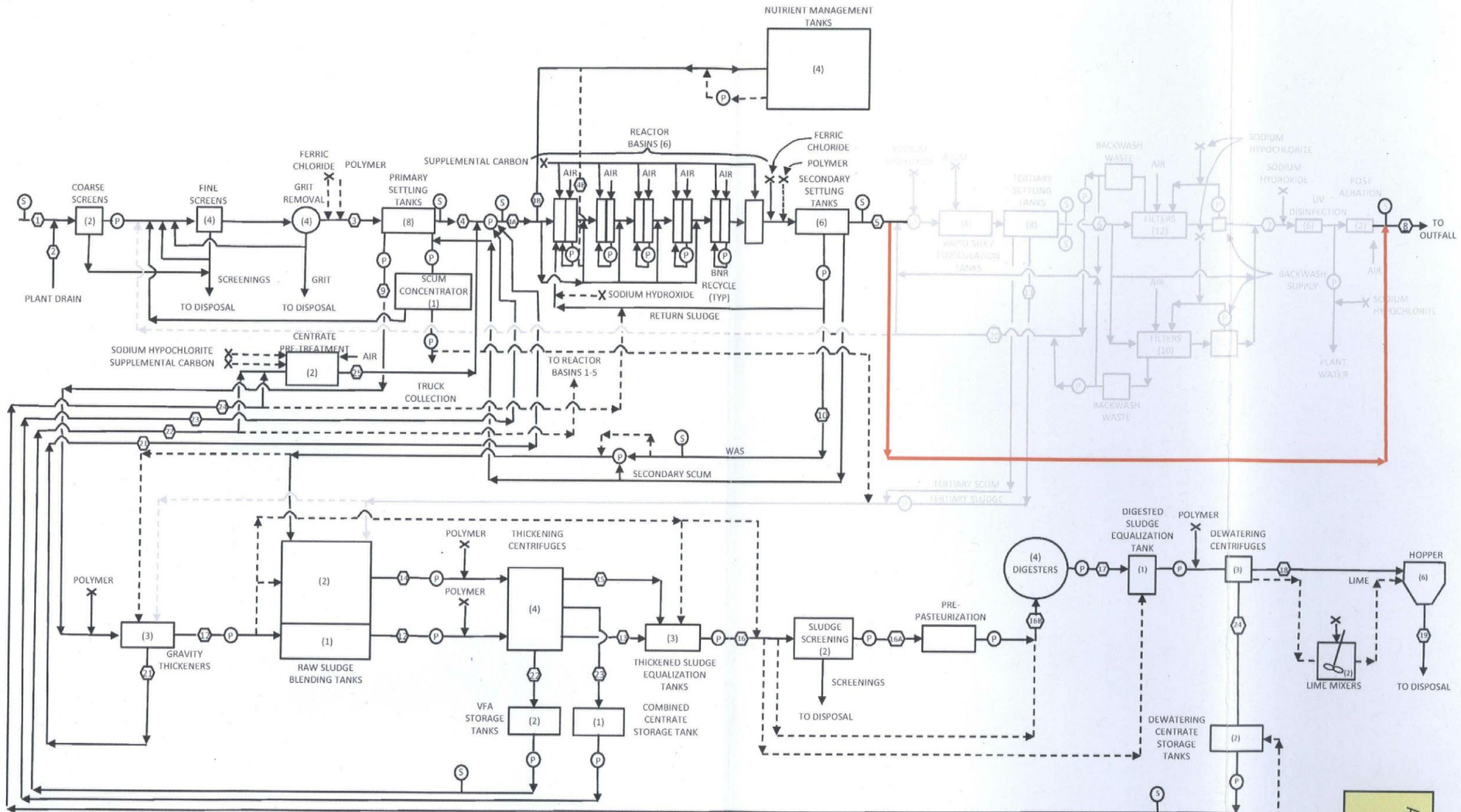

PROCESS FLOW STREAM IDENTIFICATION NUMBER

MAIN PROCESS FLOW STREAMS

1. RAW SEWAGE
2. PLANT DRAIN
3. PRIMARY INFLUENT
4. PRIMARY EFFLUENT
4A. BIOLOGICAL REACTOR BASIN INFLUENT
4B. PRIMARY EFFLUENT TO NMTs OR FROM NMTs TO BRBs
5. SECONDARY EFFLUENT
6. TERTIARY EFFLUENT
7. FILTER EFFLUENT
8. PLANT EFFLUENT

SOLIDS PROCESS FLOW STREAMS

9. PRIMARY SLUDGE
10. WASTE ACTIVATED SLUDGE
11. TERTIARY SLUDGE
12. GRAVITY THICKENED SLUDGE
13. CENTRIFUGE THICKENED PRIMARY SLUDGE
14. BLENDED SLUDGE
15. BLENDED THICKENED SLUDGE
16. DIGESTER FEED SLUDGE
16A. THICKENED SCREENED SLUDGE
16B. PASTEURIZED SLUDGE
17. DIGESTED SLUDGE
18. DEWATERED SLUDGE
19. BIOSOLIDS TO LANDFILL

RECYCLE FLOW STREAMS

20. FILTER BACKWASH
21. GRAVITY THICKENER OVERFLOW
22. VFA RECYCLE
23. THICKENING CENTRATE
24. DEWATERING CENTRATE
25. CENTRATE PRETREATMENT EFFLUENT

LEGEND

- PROCESS FLOW STREAM (X=IDENTIFICATION NUMBER)
- PRIMARY CHEMICAL ADDITION POINTS
- ALTERNATIVE CHEMICAL ADDITION POINT
- PUMPING SYSTEM
- AUTOMATIC COMPOSITE SAMPLER
- FACILITIES (X=NO. OF UNITS)

Attachment for Section B.3
Process Flow Diagram I
Tertiary Treatment Bypass

Attachment for Section B.3
Water Balance

	FLOW STREAM IDENTIFICATION	NOTES	ANNUAL AVERAGE					MAXIMUM 30-DAY				
			FLOW	BOD5		TSS		FLOW	BOD5		TSS	
	LIQUIDS PROCESS STREAMS	1	MGD	LB/DAY	mg/L	LB/DAY	mg/L	MGD	LB/DAY	mg/L	LB/DAY	mg/L
1	RAW SEWAGE		54.0	84,600	188	110,000	244	70.0	110,000	188	154,000	264
2	PLANT DRAIN	2	-	-	-	-	-	-	-	-	-	-
3	PRIMARY INFLUENT		54.0	84,600	188	110,000	244	70.0	110,000	188	154,000	264
4	PRIMARY EFFLUENT		50.1	35,900	86	38,500	92	66.0	43,200	78	53,900	98
4A	BIOLOGICAL REACTOR BASIN INFLUENT		55.5	41,900	91	49,000	106	71.8	50,700	85	68,200	114
5	SECONDARY EFFLUENT	3	54.8	1,700	4	3,700	8	71.1	2,100	4	4,700	8
6	TERTIARY EFFLUENT	3	56.9	800	2	2,900	6	72.9	900	1	3,700	6
7	FILTER EFFLUENT	3	54.0	600	1	400	1	70.0	600	1	400	1
8	PLANT EFFLUENT	3	54.0	600	1	400	1	70.0	600	1	400	1
	SOLIDS PROCESS STREAMS						% Solids					% Solids
9	PRIMARY SLUDGE		3.93	-	-	82,000	0.3	4.00	-	-	113,500	0.3
10	WASTE ACTIVATED SLUDGE		0.68	-	-	34,300	0.6	0.72	-	-	44,600	0.7
11	TERTIARY SLUDGE		0.79	-	-	13,200	0.2	1.11	-	-	18,500	0.2
12	GRAVITY THICKENED SLUDGE		0.26	-	-	87,600	4.0	0.36	-	-	121,500	4.0
13	CENTRIFUGE THICKENED PRIMARY SLUDGE		0.10	-	-	47,300	6.0	0.13	-	-	62,410	6.0
14	BLENDED SLUDGE		0.68	-	-	34,300	0.6	0.72	-	-	44,600	0.7
15	BLENDED THICKENED SLUDGE		0.03	-	-	32,600	12.0	0.04	-	-	42,300	12.0
16	DIGESTER FEED SLUDGE		0.29	-	-	120,200	4.9	0.41	-	-	163,800	4.8
16A	THICKENED SCREENED SLUDGE		0.29	-	-	120,200	4.9	0.41	-	-	163,800	4.8
16B	PASTEURIZED SLUDGE		0.29	-	-	120,200	4.9	0.41	-	-	163,800	4.8
17	DIGESTED SLUDGE		0.29	-	-	64,800	2.6	0.35	-	-	87,600	3.0
18	DEWATERED SLUDGE		0.03	-	-	61,500	29.0	0.03	-	-	83,200	29.0
19	BIOSOLIDS TO LANDFILL		0.03	-	-	61,500	29.0	0.03	-	-	83,200	29.0
	RECYCLE FLOW STREAMS											
20	FILTER BACKWASH		2.91	200	10	2,500	101	2.91	300	12	3,300	137
21	GRAVITY THICKENER OVERFLOW		4.46	4,900	132	7,600	205	4.75	6,100	153	10,600	267
22	VFA RECYCLE		0.07	2,400	3,800	5,300	8,500	0.10	3,200	3,800	6,900	8,400
23	THICKENING CENTRATE		0.65	500	98	1,700	315	0.68	700	128	2,200	392
24	DEWATERING CENTRATE		0.27	700	324	3,400	1,496	0.32	1,100	415	3,900	1,487
25	CENTRATE PRE-TREATMENT EFFLUENT		0.27	600	254	1,200	531	0.32	1,000	367	4,400	1,651

GENERAL SHEET NOTES

1. FLOW STREAM IDENTIFICATION NUMBER CORRESPOND TO THOSE SHOWN ON DWG G-22.
2. PLANT DRAIN FLOW AND LOADINGS ASSUMED TO BE NEGLIGIBLE
3. EFFLUENT QUALITY ASSUMED FOR MASS BALANCE CALCULATIONS AND MAY NOT REPRESENT ACTUAL PEFORMANCE.

Alexandria Renew Enterprises
VA0025160
Attachment for Section B.3 – On Site Chemicals

AlexRenew Process Chemical Storage

Chemical	Location[1]	Maximum Storage	Spill Prevention
Aluminum Sulfate Receiving	Basement of Building L, Solids Processing Building	Two Receiving Tanks Tank Capacity – 6,000 gal. Maximum Storage – 12,000 gal.	**Receiving tanks inside spill containment area. The containment area is sized to hold 1.5 times the volume of one tank. The containment area is equipped with an air operated diaphragm spill pump. Spills are manually pumped to the plant influent or returned to storage. Alarm provided for spill detection.**
Aluminum Sulfate Storage	Basement of Building G2, Advanced Treatment Building	Five Storage Tanks Tank Capacity - 13,600 gal. Maximum Storage - 68,000 gal.	**Storage tanks inside spill containment area. The containment area is sized to hold 1.5 times the volume of one tank. The containment area is equipped with an air operated diaphragm spill pump. Spills are manually pumped to the plant influent. Alarm provided for spill detection.**
Ferric Chloride Storage	Basement of Building L, Solids Processing Building	Four Storage Tanks Tank Capacity – 15,500 gal. Maximum Storage – 62,000 gal.	**Storage tanks inside spill containment area. The containment area is sized to hold 1.5 times the volume of one tank. The containment area is equipped with an air operated diaphragm spill pump. Spills are manually pumped to the plant influent. Alarm provided for spill detection.**
Ferric Chloride Day Tanks	Basement of Building G2, Advanced Treatment Building	Three Day Tanks Tank Capacity – 6,000 gal. Maximum Storage – 18,000 gal.	**Day tanks inside spill containment area. The containment area is sized to hold 1.5 times the volume of one tank. The containment area is equipped with an air operated diaphragm spill pump. Spills are manually pumped to the plant influent. Alarm provided for spill detection.**
Lime, Dry	Building L, Solids Processing Building	Two Storage Tanks Tank Capacity – 3,700 cu. ft. Approximately 260,000 lbs. Maximum Storage – 7,400 cu. ft. Approximately 520,000 lbs.	**The storage Tank area drains return to the plant influent.**
Methanol	Adjacent to BNR and Secondary Settling	Two Storage Tanks Tank Capacity – 24,500 gal. Maximum Storage – 49,000 gal.	**Storage tanks inside spill containment area. The containment area is equipped with an air operated diaphragm spill pump. Spills are manually pumped to the plant influent or returned to storage. Alarm provided for spill detection.**
Polymer, Dry	Building L, Solids Processing Building	Maximum Storage – 30,000 lbs.	**Mix units curbed with drains returning to the plant influent.**
Sodium Hydroxide	Basement of Building L, Solids Processing Building	Two Storage Tanks Tank Capacity – 11,500 gal. Maximum Storage – 23,000 gal.	**Storage tanks inside spill containment area. The containment area is sized to hold 1.5 times the volume of one tank. The containment area is equipped with an air operated diaphragm spill pump. Spills are manually pumped to the plant influent or returned to storage. Alarm provided for spill detection.**
Sodium Hypochlorite	Basement of Building L, Solids Processing Building	Two Storage Tanks Tank Capacity – 13,500 gal. Maximum Storage – 27,000 gal.	**Storage tanks inside spill containment area. The containment area is sized to hold 1.5 times the volume of one tank. The containment area is equipped with an air operated diaphragm spill pump. Spills are manually pumped to the plant influent or returned to storage. Alarm provided for spill detection.**
Sulfuric Acid	Basement of Building L, Solids Processing Building	Two Storage Tanks Tank Capacity – 3,000 gal. Maximum Storage – 6,000 gal.	**Storage tanks inside spill containment area. The containment area is sized to hold 1.5 times the volume of one tank. The containment area is equipped with an air operated diaphragm spill pump. Spills are manually pumped to the plant influent or returned to storage. Alarm provided for spill detection.**

1 – See attached Site Plan for specific storage location.

Alexandria Renew Enterprises
VA0025160
Attachment for Section B.3 – On Site Chemicals

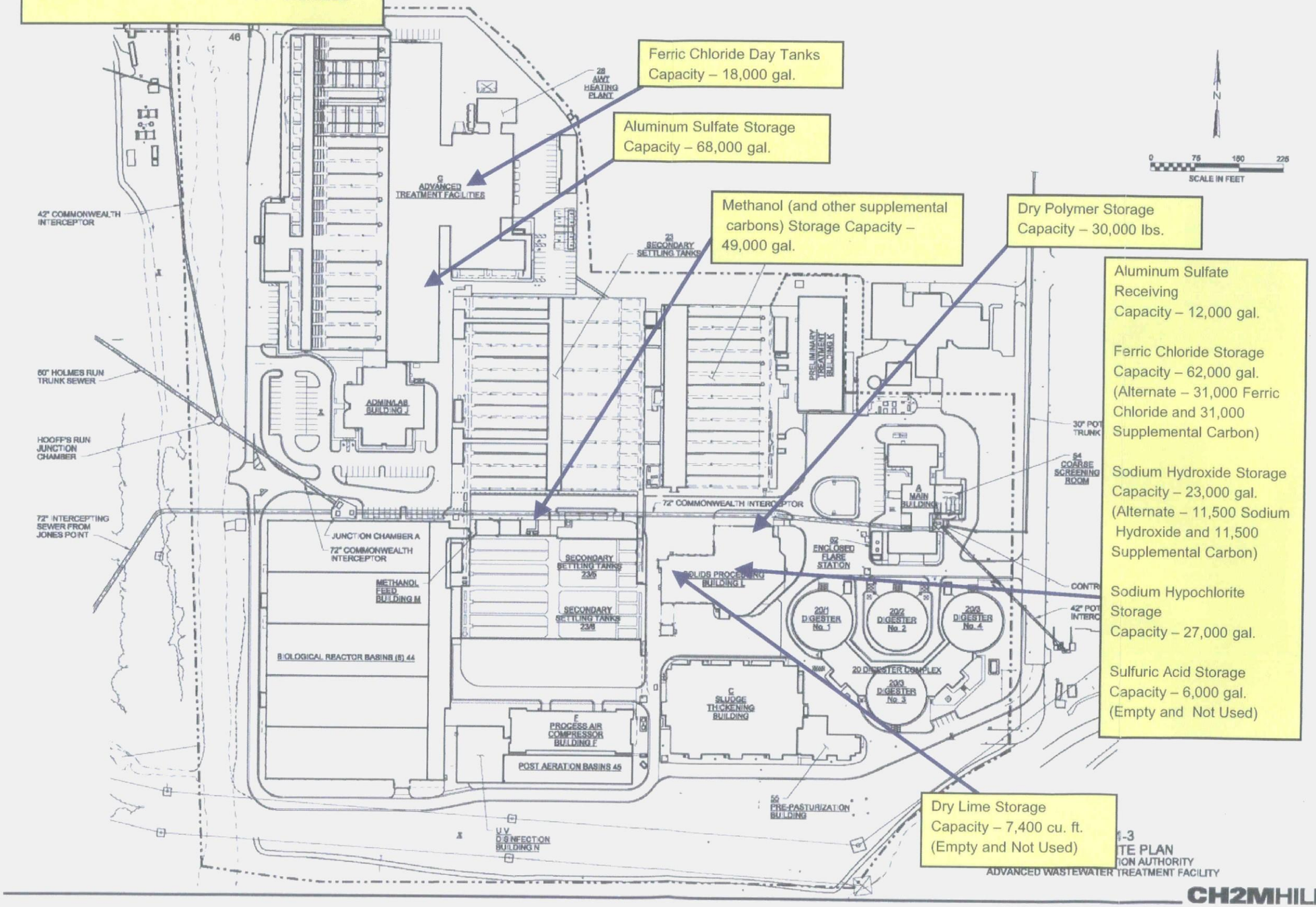

Attachment for Section B.3
Process Narrative Description

Overview of Liquid Treatment Processes

Preliminary/Primary Treatment

Coarse Screening

The raw sewage entering the plant first goes through coarse screens to remove large trash that may clog or damage the raw sewage pumps. The system consists of two 6-ft wide climber screens with 3-inch openings. The trash is disposed in dumpsters.

Raw Sewage Pumping

The raw sewage pump station consists of six pumps with a total peak capacity of 130 MGD with all pumps in service. The pump station has a capacity of 115 MGD with one pump out of service. The pump station discharges through two 60-inch pressure headers to the influent channel in Preliminary Treatment Building K.

Fine Screening

The fine screening system consists of four belt-type rotating screens with ¼ inch openings. The screenings are washed, compacted and moved by screw conveyors to a truck loading bay for disposal.

Grit Removal

The grit removal system consists of four vortex chambers that settle the heavy inorganic solids to the bottom of the inner chamber. The grit is pumped out of the inner chamber with recessed impeller pumps and discharged to a grit cyclone and classifier. The grit is washed and dewatered and then moved by screw conveyors to a truck loading bay for disposal.

Primary Treatment

The primary treatment system consists of eight primary settling tanks where the smaller solids settle to the bottom by gravity and are pumped out as sludge. Grease, oils and other floating solids rise to the surface of the tanks and are removed by a skimming mechanism. The clear water goes over weirs at the end of the tanks and is pumped to the Biological Reactor Basins (BRBs).

An alternate wet weather treatment includes bypassing excess flow around the Secondary Treatment system to preserve solids in the system (Process Flow Diagram G). This flow receives full Tertiary Treatment and UV disinfection.

An alternate treatment bypasses the Secondary Settling Tanks after Biological Nitrogen Removal. This flow receives full Tertiary Treatment and UV disinfection (Process Flow Diagram D).

Secondary Treatment

Primary Effluent Pumping

The primary effluent pump station consists of six pumps. The pump station was designed to pump 120 MGD with one pump out of service and 70 MGD with three pumps and one wet well or one header out of service. The pump station discharges through two 48-inch pressure headers to the BRB operating gallery where the flow is split into each one of the reactor basins.

Biological Nitrogen Removal (BNR)

The BNR system consists of five biological reactor basins (BRBs) and six secondary settling Each BRB has a volume of 4 million gallons and is divided into anoxic and aerobic zones. The aerobic zones, which are aerated by fine bubble air diffusers, grow micro-organisms that transform ammonia nitrogen to nitrate. The anoxic zones grow micro-organisms that transform the nitrate to nitrogen gas, which is released into the atmosphere. The system has the flexibility to be operated either in parallel (MLE) (Process Flow Diagram B) or in series (step-feed) modes (Process Flow Diagram A). Methanol can also be added to aid the micro-organisms in converting the nitrogen compounds and increase the nitrogen removal.

A Nutrient Management Facility (estimated to be on-line April 2015) with a capacity of 18 MGD can be used to receive primary effluent flows during peak ammonia loadings, then return this flow during periods of low ammonia loading to optimize the BNR performance. This facility can also be bypassed (Process Flow Diagram C)

After the biological reactor basins, the mixed liquor flows into six secondary settling tanks. The secondary settling tanks are rectangular tanks, about 12 feet deep. These tanks allow the micro-organisms to settle by gravity. The settling process is aided by adding ferric chloride and/or polymer, which also helps remove phosphorous from the water. The solids, which are rich in micro-organisms, are removed from the bottom of the settling tanks and returned to the biological reactor basins. A portion of the solids is diverted to the solids handling system as waste activated sludge (WAS).

Tertiary Treatment

Intermediate Pumping

The intermediate pump station consists of 6 pumps with a design pumping capacity of 130 MGD with 4 pumps in service. The pump station discharges through two 72-inch headers to the tertiary settling tanks.

In the event of an intermediate pump station failure, an Emergency Overflow directs flow to Outfall 001 (Process Flow Diagram I).

Tertiary Settling

The tertiary settling process consists of eight tanks. Each tank is sub-divided into a rapid mix tank, a flocculation tank and plate settling tank. The flow first enters the rapid mix tank where a coagulant (normally alum or alternatively, ferric chloride) is added to the water and thoroughly mixed. The flow then passes through the flocculation tank where gentle mixing is provided to allow the suspended solids in the water to form a cluster or floc. In the final tank, the flow passes through inclined plate settlers, where

the flocs settle by gravity thus removing suspended solids and phosphorous from the water.

Filtration

The filtration system consists of twenty two sand gravity filters. Plant flow is split between the filters and solids are removed from the water as it passes through the fine filter media. The flow through the filter is controlled by an effluent valve. The filters are equipped with a backwashing and air scouring system that periodically removes the particles accumulated in the filter media and recycles this flow to the intermediate pump station.

An alternate wet weather treatment includes excess flow bypassing filtration. This flow receives UV disinfection (Process Flow Diagram F).

In an emergency, filter effluent can be discharged through Outfall 002 (Process Flow Diagram H).

Final Treatment

UV Disinfection

The UV disinfection system consists of six parallel channels, each with a treatment capacity of 23 MGD. Each channel contains two banks of low-pressure low-intensity UV lamps. The UV light inactivates the various pathogens found in the water as it passes through the lamp banks.

Post-Aeration

The post-aeration system consists of two long rectangular channels with fine bubble diffusers along the bottom. Air can be introduced through these diffusers to increase the dissolved oxygen concentration in the water prior to discharge to Hunting Creek.

Overview of Solids Handling Processes

Sludge Thickening

Gravity Thickening

The gravity thickening system consists of five circular tanks with sloped cone bottoms. Primary and tertiary sludge are pumped to these tanks and thickened by allowing the solids to settle by gravity to the bottom. The thickened sludge is then pumped out of the bottom of the cone to the thickened sludge equalization tanks. The clarified water at the surface of the tank overflows a weir and is drained by gravity to the primary effluent pump station.

Mechanical Thickening

The mechanical thickening system consists of four thickening centrifuge trains. The waste activated sludge is stored in the raw sludge blending tanks and from there it is pumped to each of the four thickening centrifuges. The centrifuges spin the sludge at high velocities, causing the heavier solids to travel to the outside of the bowl and the clarified water, or centrate, to remain in the center. Polymer is added to the sludge to aid the liquid/solid separation process. The solids are then discharged to the thickened sludge equalization tanks where they are blended with the gravity-thickened sludge and

pumped to the pre-pasteurization facility. The centrate flows to the combined centrate storage tanks and is then pumped to the primary effluent pump station.

Sludge Digestion

Pre-Pasteurization

The sludge pre-pasteurization system reduces the pathogens in the sludge by heating it. The blended thickened sludge passes through two sludge screening presses to remove any fibrous materials that can damage other equipment. The sludge is then pumped through heat exchangers where it is heated to a temperature of 158 °F. The hot sludge is held in a heated sludge holding tank at the target temperature for at least 30 minutes. The sludge is then cooled and sent to the digesters.

Digestion

The digestion system consists of four anaerobic digesters. The digesters reduce the pathogenic organisms, reduce the mass of solids for disposal and produce methane gas which can be utilized for mixing and for fuel. The sludge is pumped to the digesters and is continuously recirculated for heating and mixing. The sludge must be maintained at a temperature of 95°F for mesophilic anaerobic digestion. After digestion the sludge is pumped to the digested sludge equalization tank. The digester gas is withdrawn from the top of the tanks and returned to the digesters for mixing. Excess gas is utilized for operation of the steam boilers or burned in the waste gas flares.

Sludge Dewatering and Disposal

Centrifuge Dewatering

The centrifuge dewatering process consists of three dewatering centrifuge trains. The purpose of this process is to convert the digested sludge, which has a solids concentration of 3 to 10 percent (3 to 10% TS) into a dewatered sludge cake with a solids concentration of 30 percent (30% TS) and above. The digested sludge is pumped from the digested sludge equalization tank to the dewatering centrifuge. The centrifuges spin the sludge at high velocities, causing the heavier solids to travel to the outside of the bowl and the clarified water, or centrate, to remain in the center. Polymer is added to the sludge to aid the liquid/solid separation process.

The high-strength ammonia centrate is further treated in the Centrate Pretreatment (CPT) facility to reduce nitrogen loading to the BNR system. The CPT facility can be bypassed, with can stored in the dewatering centrate tanks and pumped to the biological reactor basins (Process Flow Diagram E).

Biosolids Storage and Handling

The biosolids storage and handling system consists of a lime stabilization system and six biosolids storage silos. The biosolids are discharged from the centrifuge into the biosolids silos and from there, loaded into trucks for land application or other beneficial reuse. The lime stabilization system can be used to provide additional treatment if required.

Odor Control and Process Chemicals

Odor Control

Odorous air is collected from various sources throughout the plant with one main goal: to provide centralized treatment of plant odors. Odorous air is conveyed using above ground and buried collection ductwork to the Solids Processing Building for treatment. Three odor control treatment systems in the building provide removal of particulates and odors:

- Particulate scrubbers (2) - for removal of particulates from lime mixers and dewatering centrifuge offgases
- Acid scrubber (1) - for removal of ammonia from various solids processing odorous air streams
- Packed tower scrubbers (4 two-stage treatment trains) – for removal of reduced sulfides and organics from all odorous air streams

P articulate scrubbers are used remove particulate matter in select odorous air-streams in the Solids Processing Building (offgases from the lime mixers and the dewatering centrifuges) . Removal of the particulates helps to prevent fouling of downstream odor control ductwork and equipment. The particulate scrubbers use water and fixed blades to make particles fall out of the air stream and into a sump. A continuous overflow provides removal of particulates from the sump.

An acid scrubber is used to remove ammonia odors from the particulate scrubber exhausts, as well as other potentially ammonia-laden odorous air streams in the Solids Processing Building. The acid scrubber fan pulls odorous air through the acid scrubber media, where it comes into contact with a scrubbant solution containing dilute sulfuric acid. The ammonia reacts with the scrubbant solution and is absorbed into the liquid - accumulating in the sump at the bottom of the scrubber. A continuous overflow provides removal of the absorbed ammonia.

Packed tower scrubber systems are used to remove hydrogen sulfide and ammonia from all odorous air streams, including the acid scrubber exhaust. Four odor scrubber fans pull odorous air into four treatment trains. Each treatment train has two scrubbers in series, providing a first and second stage of treatment. As the odorous air passes through the scrubber media, chemicals in the scrubbant solution react with the odorous compound and absorb the m into the liquid phase. The fans then exhaust the treated air through air stacks on the roof of the Solids Handling Building. Several modes of operation are provided for each scrubber to enhance removal of odors and provide flexibility.

Process Chemicals

The AlexRenew plant uses several chemicals in the liquids and solids treatment processes and for process support. The main chemical unloading and storage facility for all plant chemicals is located in the Solids Handling Building L. In addition, the plant has a supplemental carbon storage facility (Building M) and chemical day tanks in the Advanced Wastewater Treatment (AWT) Facility (G).

Attachment for Section B.3

Power Distribution

Electrical power is supplied to the plant from the local power utility (Dominion-Virginia Power) at 34.5 kv to four (4) utility transformers. The transformers, designated as T-1A, T-1B, T-2A and T-2B, are located adjacent to the Process Air Compressor Building (Building F or PAC).

The overall power distribution of the Electrical System is monitored by the SCADA system at the individual workstations using Power Data Monitors (PDM).

System Diagram

An overall plant electrical site plan is shown in Figure 63-1. One-line diagrams of the Plant Electrical System are shown in Figure 63-2 and Figure 63-3. Figure 63-2 contains the system fed from Switchgear SS-1 which includes the Pre-pasteurization Building (Building 55), UV Disinfection Building (Building N), Building F, Sludge Thickening Building (Building C), Digester Complex (Building 20) and part of the Solids Processing Building (Building L or SPB). Figure 63-3 contains the system fed from Switchgear SS-2 which includes the Advanced Wastewater Treatment Facilities (Building G or AWT), New Wash Water Building (Building G/5), Administration and Laboratory Building (Building J), Main Building (Building A), Preliminary Treatment Building (Building K), the Biological Reactor Basins (Building 44) and Secondary Settling Tanks Building (Building 23), the Methanol Building (Building M) and part of Building L.

Relationships with Other Unit Processes

Two main 4160 volt (4.16 kv) switchgear lineups (SS-1, SS-2) located in the Building F Electrical Room distribute 4160 v, 3 phase power throughout the site via a system of underground concrete encased ductbanks and manholes (MHs). Satellite transformers step the voltage down to 480 v and supply power to each of the process building Motor Control Centers (MCCs). The exception to this is the five 1250 horsepower Process Air Compressor (PAC) motors in Building F that require a 4160 v, 3-phase power supply.

Design Parameters

The electrical system is sized to handle the design loads. The maximum connected load on SS-1 is 12.7 MVA and the demand load is 7.9 MVA. The maximum connected load on SS-2 is 14.3 MVA and the demand load is 9.3 MVA.

Reliability

Dominion -Virginia Power provides power to the site from two separate and independent sources, i.e., two separate buses in the utility substation. Each source is connected to the plant by conductors in separate concrete-encased duct bank and manhole systems. This ensures continuous power supply to the site. The internal distribution system has been designed such that a single fault at any power source will only disrupt the power supply to roughly half the electrical equipment in the plant. Power supply to essential process equipment is divided between more than one MCC.

Key Interlock System

Most transfers of loads between power source 1 and 2 are a manual operation using key interlocks installed on all switchgear, switchboards, and major MCC's. Each one of the two main circuit breakers in the switchgear, switchboard or major MCC has a key interlock with the tie circuit breaker. The locks are keyed such that there are three locks and two keys. Circuit breakers can only be closed by inserting the keys into the locks. Therefore, only two circuit breakers can be closed at the same time, which prevents closing all three circuit breakers at the same time and paralleling the power sources. There are 3 locations that have a slightly different arrangement of keys and locks. MCC-J-4C is key interlocked with the feeder to Chiller No.1. There are 2 feeders to MCC-J-4C. Only 1 circuit breaker can be closed at a time so there are 2 locks and 1 key. There are 2 circuit breakers that feed Chiller No.1. Only 1 circuit breaker can be closed at the same time so there are 2 locks and 1 key. MCC-J-4C and the Chiller No. 1 can not be fed from the same switchboard at the same time. Therefore, there are 2 locks and 1 key. Each of these 4 circuit breakers has 2 locks and requires 2 keys to close the circuit breaker. On MCC-N-1A/B there are 2 locks and 1 key on the feeders to panel N-DP3 and also in MCC-F-1A/B for the feeds to W3 Pump No. 3 and the Post Aeration Blower.

System Description

The electrical system has the following major equipment types:

Metal-Clad Switchgear - Metal-clad switchgear is an assembly of drawout vacuum circuit breakers and auxiliary equipment in a rigid metal assembly. The function of this equipment is to receive the main incoming service from the utility at 4.16 kv and distribute the 4.16 kv to transformers located at each major process building or to other 4.16 kv equipment located at other buildings. Switchgear SS-1 and SS-2 are Metal-Clad Switchgear.

Metal-Enclosed Low-Voltage Switchgear - Metal-enclosed low voltage switchgear is an assembly of drawout air break power circuit breakers and auxiliary equipment in a rigid metal assembly. The function of this equipment is to receive the incoming service from the secondary of a unit substation transformer at 480 volts and distribute the 480 volts to downstream 480 volt MCCs or to AFD's in freestanding enclosures located in the building.

Oil-Filled Pad Mounted Transformer – The oil-filled pad mounted transformers have a primary winding rated 4.16 kv. The secondary winding is rated 480 volts. The function of the transformer is to step the 4.16 kv primary down to 480 volts on the secondary to power the process equipment at a building. The oil-filled pad mounted transformer is mounted outdoors.

Low voltage (480 volt) Motor Control Centers (MCCs) - Because of the large quantity of motors in the plant the motor starters are mounted in a common assembly containing a horizontal bus that connects to a vertical bus in each section. The motor starters plug into the vertical sections.

Medium Voltage (4.16 kv) Motor Control Center - Performs the same function as a 480 volt MCC, except the motors are 4.16 kv.

Adjustable Frequency Drives (AFD) - AFDs provide the means to vary the speed of a motor. In this facility AFDs for motors 75 Hp and smaller are located in the 480 volt MCCs. AFDs for motors greater than 75 HP are located in their own dedicated freestanding enclosures.

Metal-Enclosed Switchgear - The metal-enclosed switchgear is an assembly of fused and non-fused load interrupter switches in a rigid metal assembly. The function of this equipment is to receive service at 4.16 kv and distribute the 4.16 kv to transformers located in the G/1, G/2, G/5 and G/6 Buildings. Switchgear SS-2-1 and SS-2-2 are Metal-Enclosed switchgear.

Unit-substation transformers - The unit substation transformers have a primary windings rated 4.16 kv. The secondary winding is rated 480 volts. The function of the transformer is to step the 4.16 kv primary down to 480 volts on the secondary in order to power the process equipment at a building. The unit substation transformer is mounted indoors. It is a dry-type cast-coil transformer. The major feature of these transformers is that the primary and secondary coils are completely encapsulated in an epoxy material.

Unit-Substation Primary Switch - The unit-substation primary switch is located on the primary of the unit substation transformer and provides a way to disconnect the transformer.

Switchboards - Switchboards are an assembly of drawout insulated case or molded case circuit breakers and auxiliary equipment in a rigid metal assembly. The function of this equipment is to receive the incoming service from the secondary of an oil -filled pad mounted transformer at 480 volts and distribute the 480 volts to downstream 480 volt Motor Control Centers (MCCs) or to Adjustable Frequency Drives (AFDs) in freestanding enclosures located in the building.

Automatic Transfer Switch (ATS) - This equipment provides a means to automatically transfer incoming power to equipment from a normal power source to an alternate power source when the normal power source experiences a voltage loss. An ATS is typically installed downstream of Motor Control Centers to automatically transfer lights and other essential loads between power sources.

Lightning Protection System - Each building has a lightning protection system, which consists of air terminals and copper conductors to a ground connection.

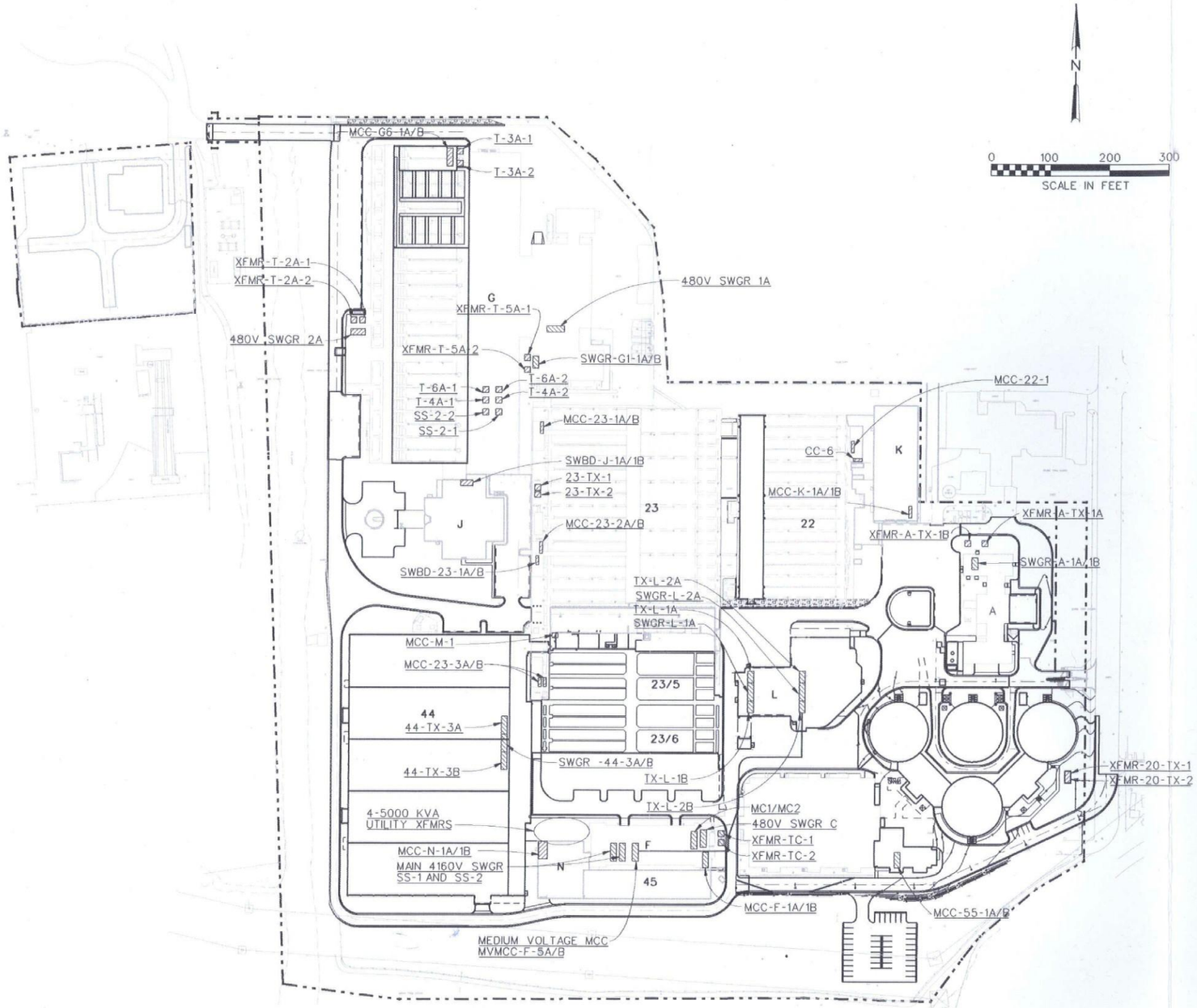

BUILDING LEGEND

A	MAIN BUILDING
F	PROCESS AIR COMPRESSOR BUILDING
G	ADVANCED TREATMENT FACILITIES
J	ADMIN/LAB BUILDING
K	PRELIMINARY TREATMENT BUILDING
L	SOLIDS BUILDING
M	METHANOL BUILDING
N	UV DISINFECTION BUILDING
20	DIGESTER COMPLEX
22	PRIMARY SETTLING TANKS
23	SECONDARY SETTLING TANKS
44	BIOLOGICAL REACTOR BASINS
45	POST AERATION BASINS
55	PRE-PASTEURIZATION

Figure 63-1
OVERALL ELECTRICAL SITE PLAN
ALEXANDRIA SANITATION AUTORITY
ADVANCED WASTEWATER TREATMENT FACILITY UPGRADE

w691e041-fim.dl21-MAR-2002 08:

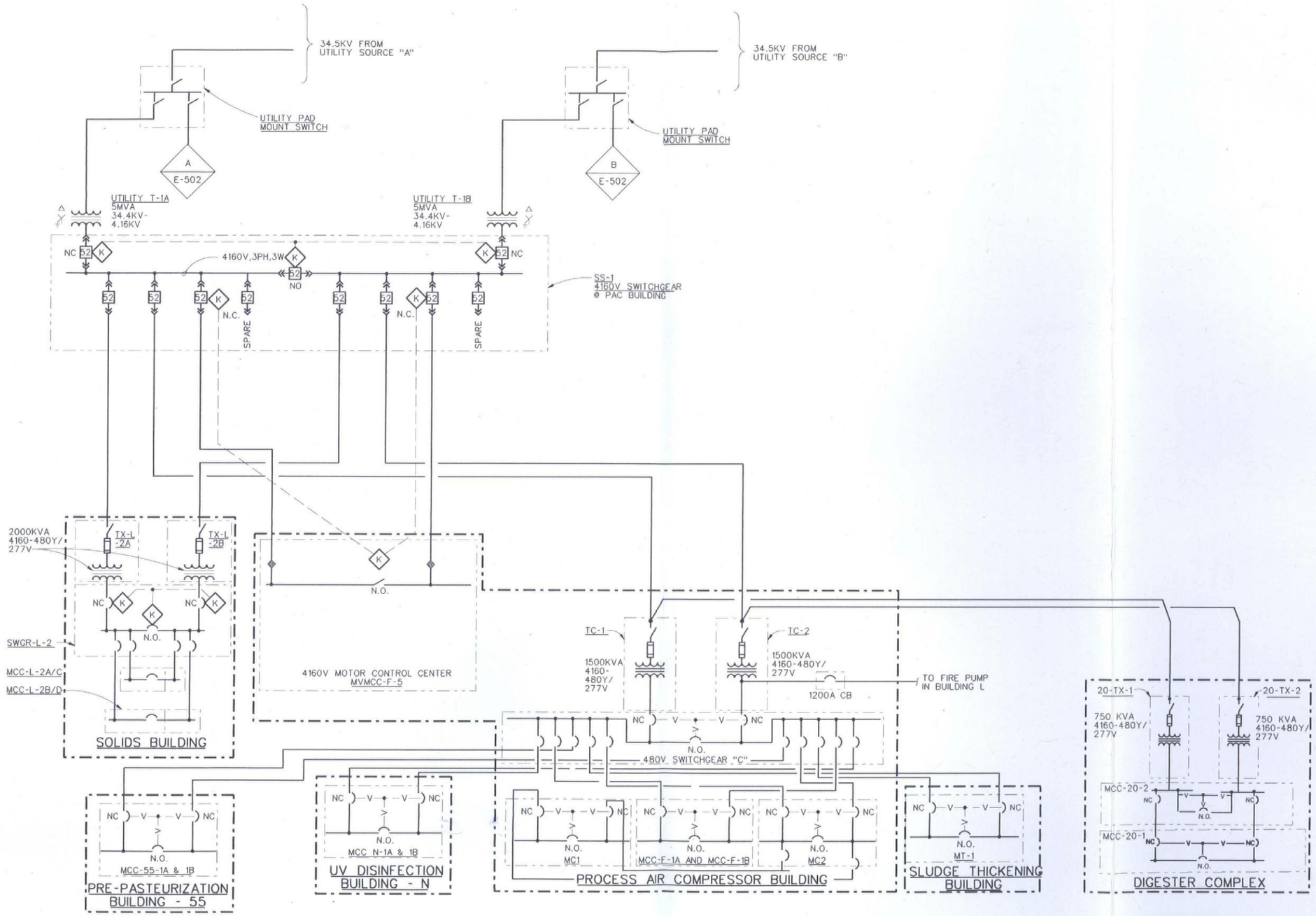

Figure 63-2
SYSTEM FED PLAN
SS-1 4.16KV SWITCHGEAR
ALEXANDRIA SANITATION AUTHORITY
ADVANCED WASTEWATER TREATMENT FACILITY UPGRADE

ta91e501-fim.dlv21-MAR-2002 06:

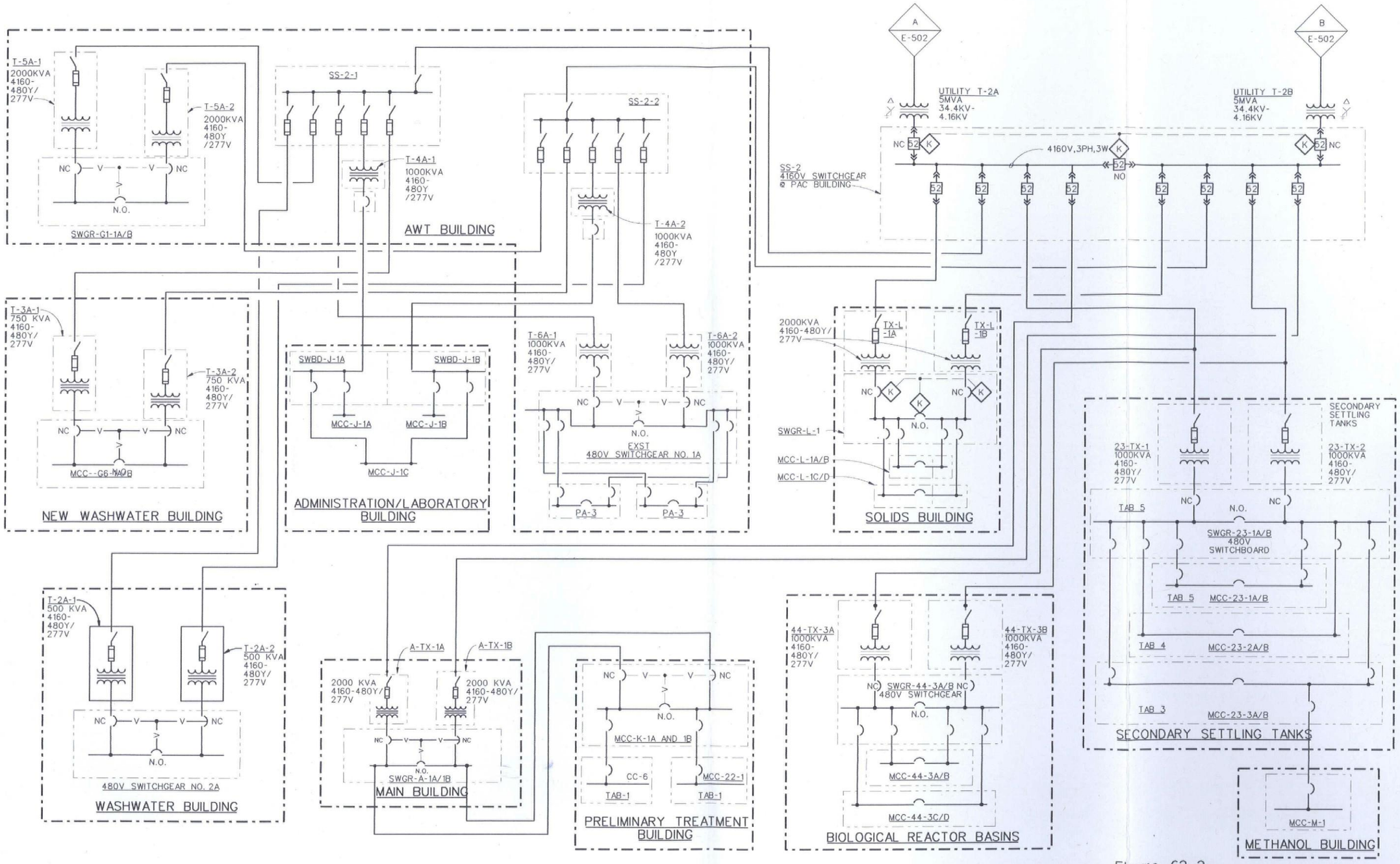

Figure 63-3
SYSTEM FED FROM
SS-2 4.16KV SWITCHGEAR
ALEXANDRIA SANITATION AUTHORITY
ADVANCED WASTEWATER TREATMENT FACILITY UPGRADE

ALEXANDRIA COMBINED TRUNK SEWERS AND INTERCEPTORS

Attachment for Sections G1 and G2, System Map and Diagram

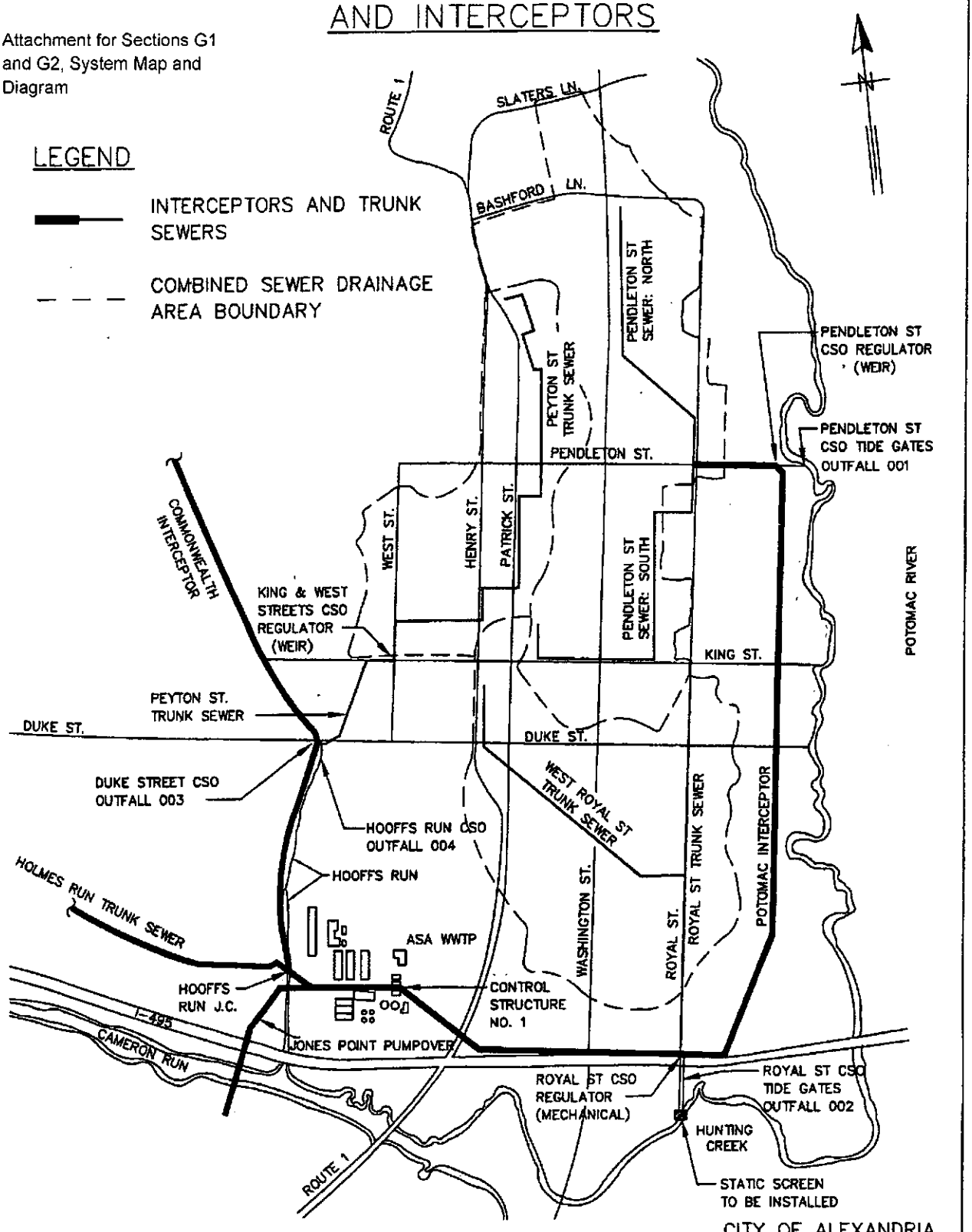

CITY OF ALEXANDRIA
TRANSPORTATION AND ENVIRONMENTAL SERVICES
COMBINED SEWER SYSTEM
2007 ANNUAL REPORT

GREELEY AND HANSEN

FILE: J:\0577\2004 CSS ANNUAL REPORT\COA_FIG-01 1:1 03/11/05 14:02 GH-G

Alexandria Renew Enterprises
VA0025160
Attachment For Section D - Expanded Effluent Data

Cadmium			
Date	Results	Units	MDL
9/18/2009	<.5	ug/l	0.5
9/19/2009	<.5	ug/l	0.5
9/20/2009	<.5	ug/l	0.5
9/21/2009	<.5	ug/l	0.5
9/22/2009	<.5	ug/l	0.5
9/23/2009	<.5	ug/l	0.5
9/24/2009	<.5	ug/l	0.5
10/4/2009	<.5	ug/l	0.5
10/5/2009	<.5	ug/l	0.5
10/6/2009	<.5	ug/l	0.5
10/7/2009	<.5	ug/l	0.5
10/8/2009	<.5	ug/l	0.5
10/9/2009	<.5	ug/l	0.5
10/10/2009	<.5	ug/l	0.5
1/8/2013	<.5	ug/l	0.5
7/21/2013	<.5	ug/l	0.5
8/7/2013	<.5	ug/l	0.5

Chromium			
Date	Results	Units	MDL
9/18/2009	<2	ug/l	2
9/19/2009	<2	ug/l	2
9/20/2009	<2	ug/l	2
9/21/2009	<2	ug/l	2
9/22/2009	<2	ug/l	2
9/23/2009	<2	ug/l	2
9/24/2009	<2	ug/l	2
10/4/2009	<2	ug/l	2
10/5/2009	<2	ug/l	2
10/6/2009	<2	ug/l	2
10/7/2009	<2	ug/l	2
10/8/2009	<2	ug/l	2
10/9/2009	<2	ug/l	2
10/10/2009	<2	ug/l	2
1/8/2013	<1	ug/l	1
7/21/2013	<1	ug/l	1
8/7/2013	<1	ug/l	1

Copper			
Date	Results	Units	MDL
9/18/2009	12	ug/l	2
9/19/2009	10	ug/l	2
9/20/2009	5	ug/l	2
9/21/2009	3	ug/l	2
9/22/2009	5	ug/l	2
9/23/2009	4	ug/l	2
9/24/2009	10	ug/l	2
10/4/2009	7	ug/l	2
10/5/2009	6	ug/l	2
10/6/2009	15	ug/l	2
10/7/2009	14	ug/l	2
10/8/2009	14	ug/l	2
10/9/2009	21	ug/l	2
10/10/2009	7	ug/l	2
1/8/2013	3	ug/l	2
7/21/2013	5	ug/l	2
8/7/2013	3	ug/l	2

Zinc			
Date	Results	Units	MDL
9/18/2009	39	ug/l	10
9/19/2009	36	ug/l	10
9/20/2009	29	ug/l	10
9/21/2009	26	ug/l	10
9/22/2009	26	ug/l	10
9/23/2009	26	ug/l	10
9/24/2009	22	ug/l	10
10/4/2009	160	ug/l	10
10/5/2009	63	ug/l	10
10/6/2009	110	ug/l	10
10/7/2009	23	ug/l	10
10/8/2009	25	ug/l	10
10/9/2009	29	ug/l	10
10/10/2009	28	ug/l	10
1/8/2013	28	ug/l	5
7/21/2013	27	ug/l	5
8/7/2013	20	ug/l	5

Hardness			
Date	Results	Units	MDL
1/6/2009	104.0	mg/l	10
1/13/2009	106.0	mg/l	10
1/20/2009	112.0	mg/l	10
1/29/2009	130.0	mg/l	10
2/3/2009	121.0	mg/l	10
2/10/2009	102.0	mg/l	10
2/17/2009	110.0	mg/l	10
2/24/2009	100.0	mg/l	10
3/3/2009	120.0	mg/l	10
3/10/2009	124.0	mg/l	10
3/17/2009	112.0	mg/l	10
3/25/2009	128.0	mg/l	10
3/31/2009	120.0	mg/l	10
4/7/2009	100.0	mg/l	10
4/14/2009	76.8	mg/l	10
4/20/2009	86.0	mg/l	10
4/28/2009	90.0	mg/l	10
5/5/2009	63.0	mg/l	10
5/12/2009	96.0	mg/l	10
5/19/2009	85.0	mg/l	10
5/26/2009	87.0	mg/l	10
6/2/2009	80.4	mg/l	10
6/9/2009	90.2	mg/l	10
6/16/2009	88.0	mg/l	10
6/23/2009	90.0	mg/l	10
6/30/2009	106.0	mg/l	10
7/7/2009	122.0	mg/l	10
7/7/2009	530.0	mg/l	10
7/14/2009	102.0	mg/l	10
7/20/2009	92.0	mg/l	10
7/27/2009	118.0	mg/l	10
8/4/2009	118.0	mg/l	10
8/4/2009	220.0	mg/l	10
8/4/2009	114.0	mg/l	10
8/11/2009	116.0	mg/l	10
8/18/2009	128.0	mg/l	10
8/25/2009	118.0	mg/l	10
9/1/2009	121.0	mg/l	10
9/8/2009	120.0	mg/l	10
9/15/2009	138.0	mg/l	10
9/17/2009	150.0	mg/l	10
9/17/2009	156.0	mg/l	10
9/18/2009	156.0	mg/l	10
9/18/2009	152.0	mg/l	10
9/18/2009	156.0	mg/l	10
9/19/2009	162.0	mg/l	10
9/19/2009	150.0	mg/l	10
9/19/2009	170.0	mg/l	10
9/20/2009	142.0	mg/l	10

Hardness			
Date	Results	Units	MDL
9/20/2009	142.0	mg/l	10
9/20/2009	148.0	mg/l	10
9/21/2009	138.0	mg/l	10
9/21/2009	136.0	mg/l	10
9/21/2009	144.0	mg/l	10
9/22/2009	140.0	mg/l	10
9/22/2009	148.0	mg/l	10
9/22/2009	152.0	mg/l	10
9/22/2009	148.0	mg/l	10
9/23/2009	148.0	mg/l	10
9/23/2009	150.0	mg/l	1
9/29/2009	136.0	mg/l	10
10/2/2009	144.0	mg/l	10
10/2/2009	138.0	mg/l	10
10/2/2009	142.0	mg/l	10
10/2/2009	144.0	mg/l	10
10/3/2009	150.0	mg/l	10
10/3/2009	142.0	mg/l	10
10/3/2009	158.0	mg/l	10
10/3/2009	122.0	mg/l	10
10/4/2009	145.0	mg/l	10
10/4/2009	164.0	mg/l	10
10/4/2009	152.0	mg/l	10
10/4/2009	156.0	mg/l	10
10/5/2009	144.0	mg/l	10
10/5/2009	170.0	mg/l	10
10/5/2009	124.0	mg/l	10
10/5/2009	150.0	mg/l	10
10/6/2009	166.0	mg/l	10
10/6/2009	146.0	mg/l	10
10/6/2009	154.0	mg/l	10
10/6/2009	170.0	mg/l	10
10/7/2009	143.0	mg/l	10
10/7/2009	157.0	mg/l	10
10/7/2009	157.0	mg/l	10
10/7/2009	155.0	mg/l	10
10/7/2009	190.0	mg/l	1
10/8/2009	149.0	mg/l	10
10/8/2009	154.0	mg/l	10
10/8/2009	162.0	mg/l	10
10/8/2009	151.0	mg/l	10
10/13/2009	150.0	mg/l	10
10/20/2009	148.0	mg/l	10
10/27/2009	150.0	mg/l	10
11/3/2009	146.0	mg/l	10
11/10/2009	111.0	mg/l	10
11/17/2009	126.0	mg/l	10
11/24/2009	94.0	mg/l	10
12/1/2009	111.0	mg/l	10

Hardness			
Date	Results	Units	MDL
12/8/2009	98.0	mg/l	10
12/15/2009	71.6	mg/l	10
12/21/2009	104.0	mg/l	10
12/29/2009	106.0	mg/l	10
1/5/2010	91.0	mg/l	10
1/12/2010	110.0	mg/l	10
1/19/2010	120.0	mg/l	10
1/26/2010	98.0	mg/l	10
2/2/2010	85.0	mg/l	10
2/8/2010	94.0	mg/l	10
2/16/2010	138.0	mg/l	10
2/22/2010	205.0	mg/l	10
2/22/2010	122.0	mg/l	10
2/23/2010	133.0	mg/l	10
2/23/2010	203.0	mg/l	10
2/25/2010	140.0	mg/l	10
2/25/2010	215.0	mg/l	10
3/1/2010	210.0	mg/l	10
3/2/2010	116.0	mg/l	10
3/2/2010	208.0	mg/l	10
3/9/2010	82.0	mg/l	10
3/16/2010	94.0	mg/l	10
3/23/2010	88.0	mg/l	10
3/30/2010	85.0	mg/l	10
4/6/2010	96.0	mg/l	10
4/13/2010	65.0	mg/l	10
4/20/2010	90.0	mg/l	10
4/27/2010	112.0	mg/l	10
5/4/2010	115.0	mg/l	10
5/11/2010	112.0	mg/l	10
5/18/2010	100.6	mg/l	10
5/25/2010	98.0	mg/l	10
6/1/2010	108.0	mg/l	10
6/8/2010	108.0	mg/l	10
6/15/2010	114.0	mg/l	10
6/22/2010	128.0	mg/l	10
6/29/2010	110.0	mg/l	10
7/6/2010	114.0	mg/l	10
7/13/2010	109.0	mg/l	10
7/20/2010	110.0	mg/l	10
7/27/2010	109.0	mg/l	10
7/29/2010	114.0	mg/l	10

Hardness			
Date	Results	Units	MDL
8/3/2010	110.0	mg/l	10
8/10/2010	134.0	mg/l	10
8/17/2010	134.0	mg/l	10
8/24/2010	132.0	mg/l	10
8/31/2010	117.0	mg/l	10
9/7/2010	128.8	mg/l	10
9/14/2010	122.0	mg/l	10
9/21/2010	142.0	mg/l	10
9/28/2010	134.0	mg/l	10
10/5/2010	112.0	mg/l	10
10/12/2010	124.0	mg/l	10
10/19/2010	102.0	mg/l	10
10/26/2010	111.0	mg/l	10
11/2/2010	114.0	mg/l	10
11/9/2010	102.0	mg/l	10
11/16/2010	104.0	mg/l	10
11/23/2010	110.0	mg/l	10
11/30/2010	124.0	mg/l	10
12/7/2010	108.0	mg/l	10
12/14/2010	108.0	mg/l	10
12/21/2010	110.0	mg/l	10
12/28/2010	116.0	mg/l	10
1/4/2011	135.0	mg/l	10
1/11/2011	120.0	mg/l	10
1/18/2011	128.0	mg/l	10
1/25/2011	126.0	mg/l	10
2/1/2011	124.0	mg/l	10
2/7/2011	134.2	mg/l	10
2/7/2011	64.2	mg/l	10
2/10/2011	62.2	mg/l	10
2/15/2011	130.0	mg/l	10
2/22/2011	126.0	mg/l	10
3/1/2011	120.0	mg/l	10
3/8/2011	124.0	mg/l	10
3/15/2011	74.0	mg/l	10
3/22/2011	90.0	mg/l	10
3/29/2011	104.0	mg/l	10
4/5/2011	94.0	mg/l	10
4/12/2011	104.6	mg/l	10
4/19/2011	95.4	mg/l	10
4/26/2011	98.0	mg/l	10
5/3/2011	102.0	mg/l	10

Hardness			
Date	Results	Units	MDL
5/10/2011	96.0	mg/l	10
5/17/2011	78.0	mg/l	10
5/31/2011	100.0	mg/l	10
6/7/2011	99.0	mg/l	10
6/14/2011	100.0	mg/l	10
6/21/2011	108.0	mg/l	10
6/28/2011	118.0	mg/l	10
7/5/2011	100.0	mg/l	10
7/12/2011	129.0	mg/l	10
7/19/2011	130.0	mg/l	10
7/26/2011	116.0	mg/l	10
8/2/2011	132.0	mg/l	10
8/9/2011	116.8	mg/l	10
8/11/2011	139.0	mg/l	10
8/16/2011	137.0	mg/l	10
8/23/2011	142.8	mg/l	10
8/30/2011	124.0	mg/l	10
9/6/2011	107.2	mg/l	10
9/13/2011	95.4	mg/l	10
9/20/2011	103.4	mg/l	10
9/27/2011	85.0	mg/l	10
10/4/2011	92.0	mg/l	10
10/11/2011	99.0	mg/l	10
10/18/2011	113.0	mg/l	10
10/25/2011	96.0	mg/l	10
11/1/2011	111.4	mg/l	10
11/8/2011	108.0	mg/l	10
11/15/2011	119.6	mg/l	10
11/22/2011	101.0	mg/l	10
11/29/2011	88.0	mg/l	10
12/6/2011	104.4	mg/l	10
12/13/2011	92.0	mg/l	10
12/20/2011	82.0	mg/l	10
12/27/2011	72.0	mg/l	10
1/3/2012	85.2	mg/l	10
1/10/2012	81.0	mg/l	10
1/17/2012	66.0	mg/l	10
1/24/2012	106.0	mg/l	10
1/31/2012	101.0	mg/l	10
2/7/2012	98.0	mg/l	10
2/14/2012	107.2	mg/l	10
2/21/2012	104.0	mg/l	10
2/29/2012	104.6	mg/l	10
3/6/2012	113.0	mg/l	10
3/13/2012	106.0	mg/l	10
3/20/2012	112.4	mg/l	10
3/27/2012	114.0	mg/l	10
4/4/2012	106.4	mg/l	10
4/10/2012	112.0	mg/l	10

Hardness			
Date	Results	Units	MDL
4/17/2012	120.8	mg/l	10
4/24/2012	114.0	mg/l	10
5/1/2012	108.8	mg/l	10
5/8/2012	127.2	mg/l	10
5/15/2012	116.0	mg/l	10
5/22/2012	124.0	mg/l	10
5/29/2012	97.4	mg/l	10
6/5/2012	96.0	mg/l	10
6/12/2012	114.0	mg/l	10
6/19/2012	115.2	mg/l	10
6/26/2012	122.0	mg/l	10
7/10/2012	120.0	mg/l	10
7/17/2012	122.0	mg/l	10
7/25/2012	124.0	mg/l	10
8/7/2012	132.4	mg/l	10
8/14/2012	136.6	mg/l	10
8/21/2012	136.4	mg/l	10
8/28/2012	132.0	mg/l	10
9/4/2012	138.6	mg/l	10
9/11/2012	141.2	mg/l	10
9/18/2012	137.8	mg/l	10
9/25/2012	138.0	mg/l	10
10/2/2012	136.8	mg/l	10
10/9/2012	138.4	mg/l	10
10/16/2012	141.0	mg/l	10
10/23/2012	137.0	mg/l	10
10/30/2012	140.0	mg/l	10
11/6/2012	96.0	mg/l	10
11/13/2012	88.0	mg/l	10
11/20/2012	110.0	mg/l	10
11/27/2012	107.0	mg/l	10
12/4/2012	124.6	mg/l	10
12/11/2012	122.6	mg/l	10
12/18/2012	122.0	mg/l	10
12/25/2012	112.0	mg/l	10
1/1/2013	118.4	mg/l	10
1/8/2013	108.4	mg/l	10
1/8/2013	105.0	mg/l	0.33
1/15/2013	100.0	mg/l	10
1/22/2013	98.0	mg/l	10
1/29/2013	107.6	mg/l	10
2/5/2013	93.8	mg/l	10
2/12/2013	86.0	mg/l	10
2/19/2013	92.0	mg/l	10
2/26/2013	98.0	mg/l	10
3/4/2013	104.0	mg/l	10
3/12/2013	97.2	mg/l	10
3/19/2013	79.4	mg/l	10
3/26/2013	77.0	mg/l	10

Hardness			
Date	Results	Units	MDL
4/2/2013	76.0	mg/l	10
4/9/2013	96.0	mg/l	10
4/16/2013	92.0	mg/l	10
4/24/2013	95.4	mg/l	10
4/30/2013	118.0	mg/l	10
5/7/2013	104.0	mg/l	10
5/14/2013	87.0	mg/l	10
5/21/2013	85.0	mg/l	10
5/28/2013	93.0	mg/l	10
6/4/2013	89.0	mg/l	10
6/11/2013	90.0	mg/l	10
6/18/2013	87.0	mg/l	10
6/25/2013	86.0	mg/l	10
7/2/2013	91.6	mg/l	10
7/9/2013	114.0	mg/l	10
7/16/2013	96.6	mg/l	10
7/21/2013	98.0	mg/l	0.33
7/23/2013	94.0	mg/l	10
7/30/2013	96.0	mg/l	10
8/6/2013	90.0	mg/l	10
8/7/2013	104.0	mg/l	10
8/13/2013	98.0	mg/l	10
8/20/2013	104.0	mg/l	10
8/27/2013	102.8	mg/l	10
9/3/2013	109.0	mg/l	10

Alexandria Renew Enterprises

VPDES Permit Application

VA0025160

NPDES Form 2A Additional Information

Additional Information

City of Alexandria, Virginia Sanitation Authority, d/b/a Alexandria Renew Enterprises
Permit Number - VA0025160

Question A.6.b and c - Flow – The annual average daily flow rate and maximum daily flow rate data periods are: **Two Years Ago**: 8/1/2010-7/31/2011, **One Year Ago**: 8/1/2011-7/31/2012, **This Year**: 8/1/2012-7/31/2013.

Question A.7 – Collection System – Fairfax County collection system entirely a separate sanitary system. Alexandria collection system has 85% separate, 15% combined.

Question A.9. e - Description of Outfall, for Outfall 001 – The Average daily flow rate data period used is 8/1/2010-7/31/13.

Question A.10.e – Description of Receiving Waters, for Outfall 001 – $CaCO_3$ data from eight sampling events at Hunting Creek near bridge on George Washington Parkway.

Question A.12 – Effluent Testing Information, for Outfall 001 – For all parameters and pollutants except for temperature, the data period used is 1/1/12 – 12/31/12. For temperature, the data period used for winter is 12/22/12-3/20/13 and the summer data period is 6/21/12-9/22/12.

Fecal Coliform data is unavailable. Instead, E. Coliform data is presented. Data for Average Daily Discharge for E. Coliform is the geometric mean of all data.

Question A.11.d – Description of Treatment, for Outfall 002 – The treatment facility has a post-aeration system, but discharging through Outfall 002 is before the post-aeration system.

Question A.12 – Effluent Testing Information, for Outfall 002 – No testing information is available for Outfall 002 since there has been no discharge in the past 9 ½ years. This outfall is located prior to UV disinfection, therefore it is assumed that with chlorination/dechlorination, the effluent would be the same as for Outfall 001.

Question A.9.f – Description of Outfall, for Outfall 016 – This is a constructed relief that relieves incoming interceptors in complete electrical/mechanical plant failure and to prevent inundation of plant and flooding. No discharges have occurred From January 2009 – August 2013.

Question A.12 – Effluent Testing Information, for Outfall 016 – No testing or sampling conducted.

Question A.9.f – Description of Outfall, for Outfall 017 – This is a pump station constructed overflow point. From January 2009 – August 2013 there have been four overflow events averaging 0.152 million gallons each.

Question A.11.a – Description of Treatment, for Outfall 017 – Flow goes through bar screen and can be held in equalization tanks. Overflows can occur from the equalization tanks.

Question A.12 – Effluent Testing Information, for Outfall 017 – No testing or sampling conducted.

Question B.6 – Effluent Testing Data (Greater than 0.1 mgd only), for Outfall 001 (No data from 002 due to no discharge) – For all parameters and pollutants except for oil and grease and total dissolved solids, the data period used is 1/1/12 – 12/31/12.

Note – 002 is intended for emergency use only. No testing information is available for Outfall 002 since there has been no discharge in the past 9 ½ years. This outfall is located prior to UV disinfection, therefore it is assumed that with chlorination/dechlorination, the effluent would be the same as for Outfall 001.

Part D – Expanded Effluent Testing Data, Metals (Total Recoverable), Cyanide, Phenols, and Hardness for Outfall 001 (No data from 002 due to no discharge)

Samples for Cyanide and Total Phenolic Compounds were collected on 9/17-24/2009, 10/4-10/2009, 1/8/2013, 7/21/2013 and 8/8/2013. Samples for Hardness were collected on 9/23//2009, 10/7/2009, 1/8/2013, 7/21/2013and 8/7/2013. Samples for Total Dissolved Solids were collected on 7/22/2013, 7/30/2013, and 8/7/2013. Samples for Total Oil and Grease were collected on 9/17-22/2009, 10/3-10/2009, 7/22/2013, 8/2/2013, 8/7/2013, and 8/8/2013. Samples for Antimony, Arsenic, Beryllium, Cadmium, Chromium, Copper, Lead, Mercury, Nickel, Selenium, Silver, Thallium, and Zinc were collected 9/18-24/2009, 10/4-10/2009, 1/8/2013, 7/21/2013, and 8/7/2013. Samples for Volatile Organic Compounds, Acid Extractable Compounds, and Base Neutral Compounds were collected 9/22/2009, 10/7/2009, 1/8/2013, 7/21/2013, and 8/8/2013.

The analytical method used for Antimony, Arsenic, Beryllium, Cadmium, Chromium, Copper, Lead, Nickel, Selenium, Silver, Thallium and Zinc for 2009 samples was EPA 200.8. The 2013 samples were analyzed using EPA 200.7.

The analytical method used for Mercury for the 2009 samples was EPA 245.1. The 2013 samples were analyzed using EPA 200.7.

The analytical method used for Cyanide for the 2009 samples was SM 4500CN-E. The 2013 samples were analyzed using EPA 335.4.

The analytical method used for 1,2-Dichlorobenzene, 1,3-Dichlorobenzene, 1,4-Dichlorobenzene for the 2009 samples was EPA 625. The 2013 samples were analyzed using EPA 624

Where MDL's changed between methods or sampling periods, maximum data used the higher MDL when all data was below the MDL.

For average data, MDL values were used for less than MDL results.

Alexandria Renew Enterprises

VPDES Permit Application

VA0025160

NPDES Form 2A Application Addendum

VPDES Permit Application Addendum

1. **Entity to whom the permit is to be issued:** Alexandria Renew Enterprises

Who will be legally responsible for the wastewater treatment facilities and compliance with the permit? This may or may not be the facility or property owner.

2. **Is this facility located within city or town boundaries?** Yes ☒ No ☐

3. **Provide the tax map parcel number for the land where the discharge is located.** Map #079.00 Block 01, Lot 13, 079.00/02/01 079.00/01/16; 079.00/02/09

4. **For the facility to be covered by this permit, how many acres will be disturbed during the next five years due to new construction activities?** 0

5. **What is the design average effluent flow of this facility?** 54 MGD

For industrial facilities, provide the max. 30-day average production level, include units:

N/A

In addition to the design flow or production level, should the permit be written with limits for any other discharge flow tiers or production levels? Yes ☐ No ☒

If "Yes", please identify the other flow tiers (in MGD) or production levels:

N/A

Please consider the following questions for both the flow tiers and the production levels (if applicable): Do you plan to expand operations during the next five years? Is your facility's design flow considerably greater than your current flow?

6. **Nature of operations generating wastewater:**

Domestic Wastewater Treatment Facility

98 % of flow from domestic connections/sources

Number of private residences to be served by the treatment works: _____

2 % of flow from non-domestic connections/sources

7. **Mode of discharge:** ☒ Continuous ☐ Intermittent ☐ Seasonal

Describe frequency and duration of intermittent or seasonal discharges:

N/A

8. **Identify the characteristics of the receiving stream at the point just above the facility's discharge point:**

X Permanent stream, never dry

___ Intermittent stream, usually flowing, sometimes dry

___ Ephemeral stream, wet-weather flow, often dry

___ Effluent-dependent stream, usually or always dry without effluent flow

___ Lake or pond at or below the discharge point

___ Other: _____

9. **Approval Date(s):**

O & M Manual May 2012 (Revised) **Sludge/Solids Management Plan** May 2010 (Revised)

Have there been any changes in your operations or procedures since the above approval dates? Yes ☐ No ☒

Alexandria Renew Enterprises

VPDES Permit Application

VA0025160

VPDES Sewage Sludge Permit Application Form

FACILITY NAME: Alexandria Renew Enterprises **VPDES PERMIT NUMBER:** VA0025160

VPDES SEWAGE SLUDGE PERMIT APPLICATION FORM

SCREENING INFORMATION

This application is divided into four sections. Section A pertains to all applicants. The applicability of Sections B, C and D depends on your facility's sewage sludge use or disposal practices. The information provided on this page will help you determine which sections to fill out.

1. All applicants must complete Section A (General Information).

2. Does this facility generate sewage sludge? _X_ Yes ____ No

   Does this facility derive a material from sewage sludge? _X_ Yes ____ No

   If you answered "Yes" to either, complete Section B (Generation Of Sewage Sludge or Preparation Of A Material Derived From Sewage Sludge).

3. Does this facility apply sewage sludge to the land? ____ Yes _X_ No

   Is sewage sludge from this facility applied to the land? _X_ Yes ____ No

   If you answer "No" to all above, skip Section C.

   If you answered "Yes" to either, answer the following three questions:

   a. Does the sewage sludge from this facility meet the ceiling concentrations, pollutant concentrations, Class A pathogen reduction requirements and one of the vector attraction reduction requirements 1-8, as identified in the instructions? _X_ Yes ____ No

   b. Is sewage sludge from this facility placed in a bag or other container for sale or give-away for application to the land? ____ Yes _X_ No

   c. Is sewage sludge from this facility sent to another facility for treatment or blending? _X_ Yes ____ No

   If you answered "No" to all three, complete Section C (Land Application Of Bulk Sewage Sludge).

   If you answered "Yes" to a, b or c, skip Section C.

4. Do you own or operate a surface disposal site? ____ Yes _X_ No

   If "Yes", complete Section D (Surface Disposal).

FACILITY NAME: Alexandria Renew Enterprises **VPDES PERMIT NUMBER:** VA0025160

SECTION A. GENERAL INFORMATION

All applicants must complete this section.

1. Facility Information.

a. Facility name: Alexandria Renew Enterprises Water Resources Recovery Facility

b. Contact person: Adrienne Fancher

Title: Chief Operating Officer

Phone: (703) 549-3381

c. Mailing address:

Street or P.O. Box: 1500 Eisenhower Avenue

City or Town: Alexandria State: Virginia Zip: 22314

d. Facility location:

Street or Route #: 1500 Eisenhower Avenue

County: N/A

City or Town: Alexandria State: Virginia Zip: 22314

e. Is this facility a Class I sludge management facility? X Yes ____ No

f. Facility design flow rate: 54 mgd

g. Total population served: 315,000

h. Indicate the type of facility:

X Publicly owned treatment works (POTW)

____ Privately owned treatment works

____ Federally owned treatment works

____ Blending or treatment operation

____ Surface disposal site

____ Other (describe): ____

2. Applicant Information. If the applicant is different from the above, provide the following: **N/A**

a. Applicant name: ____

b. Mailing address:

Street or P.O. Box: ____

City or Town: ____ State: ____ Zip: ____

c. Contact person: ____

Title: ____

Phone: (____) ____

d. Is the applicant the owner or operator (or both) of this facility?

____ owner ____ operator

e. Should correspondence regarding this permit be directed to the facility or the applicant?

____ facility ____ applicant

3. Permit Information.

a. Facility's VPDES permit number (if applicable): VA0025160

b. List on this form or an attachment, all other federal, state or local permits or construction approvals received or applied for that regulate this facility's sewage sludge management practices:

Permit Number:	Type of Permit:
N/A	N/A
N/A	N/A

FACILITY NAME: Alexandria Renew Enterprises VPDES PERMIT NUMBER: VA0025160

4. **Indian Country.** Does any generation, treatment, storage, application to land or disposal of sewage sludge from this facility occur in Indian Country? _____ Yes __X__ No If "Yes", describe:

5. **Topographic Map.** Provide a topographic map or maps (or other appropriate maps if a topographic map is unavailable) that shows the following information. Maps should include the area one mile beyond all property boundaries of the facility:
   a. Location of all sewage sludge management facilities, including locations where sewage sludge is generated, stored, treated, or disposed. **See attachment for NPDES Form 2A, Section B.2 for location where sewage sludge is generated, stored and treated. Contractor identified in A.7 holds permits for disposal. See attachment for Biosolids Application Summary to each county.**
   b. Location of all wells, springs, and other surface water bodies listed in public records or otherwise known to the applicant within 1/4 mile of the property boundaries.

6. **Line Drawing.** Provide a line drawing and/or a narrative description that identifies all sewage sludge processes that will be employed during the term of the permit including all processes used for collecting, dewatering, storing, or treating sewage sludge, the destination(s) of all liquids and solids leaving each unit, and all methods used for pathogen reduction and vector attraction reduction. **See attachment for NPDES Form 2A, Section B.3.**

7. **Contractor Information.** Are any operational or maintenance aspects of this facility related to sewage sludge generation, treatment, use or disposal the responsibility of a contractor? __X__ Yes _____ No

   If "Yes", provide the following for each contractor (attach additional pages if necessary).

   Name: Synagro - WWT. Inc

   Mailing address:

   Street or P.O. Box: 7014 East Baltimore Street

   City or Town: Baltimore State: MD Zip: 21224

   Phone: (410) 284-4120

   Contractor's Federal, State or Local Permit Number(s) applicable to this facility's sewage sludge:

   VDHBUR 33, 42, 112, 131 VPA 00052, 00062, 00063, 00064, 00824, 01578,

   If the contractor is responsible for the use and/or disposal of the sewage sludge, provide a description of the service to be provided to the applicant and the respective obligations of the applicant and the contractor(s).
   The contractor shall furnish all equipment and personnel necessary to haul and beneficially reuse biosolids generated by Alexandria Renew Enterprises (AlexRenew). AlexRenew shall provide a monthly certification statement to contractor that specify the quality of the biosolids and warrant that the biosolids are non-hazardous as determined by the results of an annual Toxic Characteristic Leaching Procedure. AlexRenew shall compensate contractor for services provided.

8. **Pollutant Concentrations.** Using the table below or a separate attachment, provide sewage sludge monitoring data for the pollutants which limits in sewage sludge have been established in 9 VAC 25-31-10 et seq. for this facility's expected use or disposal practices. All data must be based on three or more samples taken at least one month apart and must be no more than four and one-half years old.

POLLUTANT	CONCENTRATION (mg/kg dry weight)	SAMPLE DATE	ANALYTICAL METHOD	DETECTION LEVEL FOR ANALYSIS
Arsenic	4.7	2012 Monthly Data Avg.	SW 6010C	1.0 mg/kg
Cadmium	1.5	2012 Monthly Data Avg.	SW 6010C	1.0 mg/kg
Chromium	46.7	2012 Monthly Data Avg.	SW 6010C	5 mg/kg
Copper	393	2012 Monthly Data Avg.	SW 6010C	1 mg/kg
Lead	34.0	2012 Monthly Data Avg.	SW 6010C	5 mg/kg
Mercury	1.2	2012 Monthly Data Avg.	SW 7471B	1.0 mg/kg
Molybdenum	8.8	2012 Monthly Data Avg.	SW 6010C	5 mg/kg

Nickel	16.3	2012 Monthly Data Avg.	SW 6010C	5 mg/kg
Selenium	4.1	2012 Monthly Data Avg.	SW 6010C	1.0 mg/kg
Zinc	917	2012 Monthly Data Avg.	SW 6010C	1 mg/kg

9. **Certification.** Read and submit the following certification statement with this application. Refer to the instructions to determine who is an officer for purposes of this certification. Indicate which parts of the application you have completed and are submitting:

   X Section A (General Information)

   X Section B (Generation of Sewage Sludge or Preparation of a Material Derived from Sewage Sludge)

   X Section C (Land Application of Bulk Sewage Sludge)

   _____ Section D (Surface Disposal)

   "I certify under penalty of law that this document and all attachments were prepared under my direction or supervision in accordance with a system designed to assure that qualified personnel properly gather and evaluate the information submitted. Based on my inquiry of the person or persons who manage the system or those persons directly responsible for gathering the information, the information is, to the best of my knowledge and belief, true, accurate and complete. I am aware that there are significant penalties for submitting false information, including the possibility of fine and imprisonment for knowing violations."

   Name and official title Karen L. Pallansch, Chief Executive Officer

   Signature _____ Date Signed 11/1/13

   Telephone number (703) 549-3381

   Upon request of the department, you must submit any other information necessary to assess sewage sludge use or disposal practices at your facility or identify appropriate permitting requirements.

FACILITY NAME: Alexandria Renew Enterprises VPDES PERMIT NUMBER: VA0025160

SECTION B. GENERATION OF SEWAGE SLUDGE OR PREPARATION OF A MATERIAL DERIVED FROM SEWAGE SLUDGE

Complete this section if your facility generates sewage sludge or derives a material from sewage sludge

1. **Amount Generated On Site.**
   Total dry metric tons per 365-day period generated at your facility: 5481 dry metric tons **(2012 Data)**

2. **Amount Received from Off Site.** If your facility receives sewage sludge from another facility for treatment, use or disposal, provide the following information for each facility from which sewage sludge is received. If you receive sewage sludge from more than one facility, attach additional pages as necessary. **N/A**

   a. Facility name: N/A

   b. Contact Person: N/A

   Title: N/A

   Phone: ( ) N/A

   c. Mailing address:

   Street or P.O. Box: N/A

   City or Town: N/A State: N/A Zip: N/A

   d. Facility location: N/A

   (not P.O. Box) N/A

   e. Total dry metric tons per 365-day period received from this facility: N/A dry metric tons

   f. Describe, on this form or on another sheet of paper, any treatment processes known to occur at the off-site facility, including blending activities and treatment to reduce pathogens or vector attraction characteristics:

   N/A

3. **Treatment Provided at Your Facility.**

   a. Which class of pathogen reduction is achieved for the sewage sludge at your facility?
   X Class A ____ Class B ____ Neither or unknown

   b. Describe, on this form or another sheet of paper, any treatment processes used at your facility to reduce pathogens in sewage sludge: Sewage sludge is treated in a time-temperature pasteurization process under EPA Alternative 5 – Use of a PFRP

   c. Which vector attraction reduction option is met for the sewage sludge at your facility?

   X Option 1 (Minimum 38 percent reduction in volatile solids)

   ____ Option 2 (Anaerobic process, with bench-scale demonstration)

   ____ Option 3 (Aerobic process, with bench-scale demonstration)

   ____ Option 4 (Specific oxygen uptake rate for aerobically digested sludge)

   ____ Option 5 (Aerobic processes plus raised temperature)

   ____ Option 6 (Raise pH to 12 and retain at 11.5)

   ____ Option 7 (75 percent solids with no unstabilized solids)

   ____ Option 8 (90 percent solids with unstabilized solids)

   ____ None or unknown

   d. Describe, on this form or another sheet of paper, any treatment processes used at your facility to reduce vector attraction properties of sewage sludge: This facility utilizes anaerobic digestion to reduce the mass of volatile solids in the sewage sludge by at least 38%. The sludge is held in completely mixed high-rate digesters at 95 Deg. F for at least 15 days.

   e. Describe, on this form or another sheet of paper, any other sewage sludge treatment activities, including

blending, not identified in a - d above: Less than 1% of annual production of dewatered biosolids is blended with woody waste for use as a soil amendment product.

4. **Preparation of Sewage Sludge Meeting Ceiling and Pollutant Concentrations, Class A Pathogen Requirements and One of Vector Attraction Reduction Options 1-8 (EQ Sludge).**

   (If sewage sludge from your facility does not meet all of these criteria, skip Question 4.)

   a. Total dry metric tons per 365-day period of sewage sludge subject to this section that is applied to the land:

   5481 dry metric tons

   b. Is sewage sludge subject to this section placed in bags or other containers for sale or give-away?

   ____ Yes X No

5. **Sale or Give-Away in a Bag or Other Container for Application to the Land.**

   (Complete this question if you place sewage sludge in a bag or other container for sale or give-away prior to land application. Skip this question if sewage sludge is covered in Question 4.)

   a. Total dry metric tons per 365-day period of sewage sludge placed in a bag or other container at your facility for sale or give-away for application to the land: N/A dry metric tons

   b. Attach, with this application, a copy of all labels or notices that accompany the sewage sludge being sold or given away in a bag or other container for application to the land. **N/A**

6. **Shipment Off Site for Treatment or Blending.**

   (Complete this question if sewage sludge from your facility is sent to another facility that provides treatment or blending. This question does not apply to sewage sludge sent directly to a land application or surface disposal site. Skip this question if the sewage sludge is covered in Questions 4 or 5. If you send sewage sludge to more than one facility, attach additional sheets as necessary.)

   a. Receiving facility name: Riverside Mulch

   b. Facility contact: Allan Stump

   Title: President

   Phone: (304) 822-3380

   c. Mailing address:

   Street or P.O. Box: South Branch River Road RR8

   City or Town: Romney State: WV Zip: 26757

   d. Total dry metric tons per 365-day period of sewage sludge provided to receiving facility:

   0 dry metric tons NOTE: No sludge was blended in 2012.

   e. List, on this form or an attachment, the receiving facility's VPDES permit number as well as the numbers of all other federal, state or local permits that regulate the receiving facility's sewage sludge use or disposal practices:

Permit Number:	Type of Permit:
VPA00064	Virginia Pollution Abatement Permit
6300	City of Hopewell, Virginia Indirect Wastewater Discharge Permit (Incineration of Biosolids)

   f. Does the receiving facility provide additional treatment to reduce pathogens in sewage sludge from your facility?

   ____ Yes X No

   Which class of pathogen reduction is achieved for the sewage sludge at the receiving facility?

   ____ Class A ____ Class B X Neither or unknown

   Describe, on this form or another sheet of paper, any treatment processes used at the receiving facility to reduce pathogens in sewage sludge:

   N/A

   g. Does the receiving facility provide additional treatment to reduce vector attraction characteristics of the sewage

sludge? _____ Yes __X__ No

Which vector attraction reduction option is met for the sewage sludge at the receiving facility?

_____ Option 1 (Minimum 38 percent reduction in volatile solids)

_____ Option 2 (Anaerobic process, with bench-scale demonstration)

_____ Option 3 (Aerobic process, with bench-scale demonstration)

_____ Option 4 (Specific oxygen uptake rate for aerobically digested sludge)

_____ Option 5 (Aerobic processes plus raised temperature)

_____ Option 6 (Raise pH to 12 and retain at 11.5)

_____ Option 7 (75 percent solids with no unstabilized solids)

_____ Option 8 (90 percent solids with unstabilized solids)

__X__ None unknown

Describe, on this form or another sheet of paper, any treatment processes used at the receiving facility to reduce vector attraction properties of sewage sludge: N/A

h. Does the receiving facility provide any additional treatment or blending not identified in f or g above?
__X__ Yes _____ No

If "Yes", describe, on this form or another sheet of paper, the treatment processes not identified in f or g above:

Biosolids blended with woody waste

i. If you answered "Yes" to f, g or h above, attach a copy of any information you provide to the receiving facility to comply with the "notice and necessary information" requirement of 9 VAC 25-31-530.G.

j Does the receiving facility place sewage sludge from your facility in a bag or other container for sale or give-away for application to the land? _____ Yes __X__ No

If "Yes", provide a copy of all labels or notices that accompany the product being sold or given away.

k. Will the sewage sludge be transported to the receiving facility in a truck-mounted watertight tank normally used for such purposes? __X__ Yes _____ No. If "No", provide description and specification on the vehicle used to transport the sewage sludge to the receiving facility.

Show the haul route(s) on a location map or briefly describe the haul route below and indicate the days of the week and the times of the day sewage sludge will be transported. I-95S to I-495W to I-66W to SR-3000 to Route 28S to Midland Road to Airport Road to the Riverside Mulch facility. Hauling on occurs Monday – Friday.

7. Land Application of Bulk Sewage Sludge.

(Complete Question 7.a if sewage sludge from your facility is applied to the land, unless the sewage sludge is covered in Questions 4, 5 or 6. Complete Question 7.b, c & d only if you are responsible for land application of sewage sludge.)

a. Total dry metric tons per 365-day period of sewage sludge applied to all land application sites:

N/A dry metric tons

b. Do you identify all land application sites in Section C of this application? _____ Yes _____ No **N/A**

If "No", submit a copy of the Land Application Plan (LAP) with this application (LAP should be prepared in accordance with the instructions).

c. Are any land application sites located in States other than Virginia? _____ Yes _____ No **N/A**

If "Yes", describe, on this form or on another sheet of paper, how you notify the permitting authority for the States where the land application sites are located. Provide a copy of the notification.

N/A

d. Attach a copy of any information you provide to the owner or lease holder of the land application sites to comply with

the "notice and necessary" information requirement of 9 VAC 25-31-530 F and/or H (Examples may be obtained in Appendix IV).

FACILITY NAME: Alexandria Renew Enterprises VPDES PERMIT NUMBER: VA0025160

8. Surface Disposal.

(Complete Question 8 if sewage sludge from your facility is placed on a surface disposal site.)

a. Total dry metric tons per 365-day period of sewage sludge from your facility placed on all surface disposal sites: N/A dry metric tons

b. Do you own or operate all surface disposal sites to which you send sewage sludge for disposal?
_____ Yes _____ No **N/A**

If "No", answer questions c - g for each surface disposal site that you do not own or operate. If you send sewage sludge to more than one surface disposal site, attach additional pages as necessary.

c. Site name or number: N/A

d. Contact person: N/A

Title: N/A

Phone: (_____) N/A

Contact is: _____ Site Owner _____ Site operator **N/A**

e. Mailing address:

Street or P.O. Box: N/A

City or Town: N/A State: _____ Zip: _____

f. Total dry metric tons per 365-day period of sewage sludge from your facility placed on this surface disposal site: N/A dry metric tons

g. List, on this form or an attachment, the surface disposal site VPDES permit number as well as the numbers of all other federal, state or local permits that regulate the sewage sludge use or disposal practices at the surface disposal site:

Permit Number:	Type of Permit:
N/A	

9. Incineration.

(Complete Question 9 if sewage sludge from your facility is fired in a sewage sludge incinerator.)

a. Total dry metric tons per 365-day period of sewage sludge from your facility fired in a sewage sludge incinerator: 0 dry metric tons **(Used on an emergency basis only)**

b. Do you own or operate all sewage sludge incinerators in which sewage sludge from your facility is fired?
_____ Yes _____ No

If "No", answer questions c - g for each sewage sludge incinerator that you do not own or operate. If you send sewage sludge to more than one sewage sludge incinerator, attach additional pages as necessary.

c. Incinerator name or number: Hopewell Regional Wastewater Treatment Facility

d. Contact person: Mark Haley

Title: Director

Phone: (804) 541-2240

Contact is: _____ Incinerator Owner X Incinerator Operator

e. Mailing address:

Street or P.O. Box: PO Box 969 231 Hummel Ross Road

City or Town: Hopewell State: VA Zip: 23860

f. Total dry metric tons per 365-day period of sewage sludge from your facility fired in this sewage sludge incinerator: 0 dry metric tons **(Used on an emergency basis only)**

g. List on this form or an attachment the numbers of all other federal, state or local permits that regulate the firing

of sewage sludge at this incinerator:

Permit Number:	Type of Permit:
VA00666630	VPDES
50735	Air

10. Disposal in a Municipal Solid Waste Landfill.

(Complete Question 10 if sewage sludge from your facility is placed on a municipal solid waste landfill. Provide the following information for each municipal solid waste landfill on which sewage sludge from your facility is placed. If sewage sludge is placed on more than one municipal solid waste landfill, attach additional pages as necessary.)

a. Landfill name: N/A

b. Contact person: N/A

Title: N/A

Phone: ( ) N/A

Contact is: _____ Landfill Owner _____ Landfill Operator **N/A**

c. Mailing address:

Street or P.O. Box: N/A

City or Town: N/A State: _____ Zip: _____

d. Landfill location.

Street or Route #: N/A

County: N/A

City or Town: N/A State: _____ Zip: _____

e. Total dry metric tons per 365-day period of sewage sludge placed in this municipal solid waste landfill:

N/A dry metric tons

f. List, on this form or an attachment, the numbers of all federal, state or local permits that regulate the operation of this municipal solid waste landfill:

Permit Number:	Type of Permit:
N/A	

g. Does sewage sludge meet applicable requirements in the Virginia Solid Waste Management Regulation, 9 VAC 20-80-10 et seq., concerning the quality of materials disposed in a municipal solid waste landfill?
_____ Yes _____ No **N/A**

h. Does the municipal solid waste landfill comply with all applicable criteria set forth in the Virginia Solid Waste Management Regulation, 9 VAC 20-80-10 et seq.? _____ Yes _____ No **N/A**

i. Will the vehicle bed or other container used to transport sewage sludge to the municipal solid waste landfill be watertight and covered? _____ Yes _____ No **N/A**

Show the haul route(s) on a location map or briefly describe the route below and indicate the days of the week and time of the day sewage sludge will be transported. N/A

FACILITY NAME: Alexandria Renew Enterprises VPDES PERMIT NUMBER: VA0025160

SECTION C. LAND APPLICATION OF BULK SEWAGE SLUDGE

Complete this section for sewage sludge that is land applied unless any of the following conditions apply:

- ***The sewage sludge meets the Table 1 ceiling concentrations, the Table 3 pollutant concentrations, Class A pathogen requirements and one of the vector attraction reduction options 1-8 (fill out B.4 instead) (EQ Sludge); or***
- ***The sewage sludge is sold or given away in a bag or other container for application to the land (fill out B.5 instead); or***
- ***You provide the sewage sludge to another facility for treatment or blending (fill out B.6 instead).***

Complete Section C for every site on which the sewage sludge that you reported in B.7 is land applied.

1. Identification of Land Application Site.

a. Site name or number: N/A

b. Site location (Complete i and ii)

i. Street or Route#: N/A

County: N/A

City or Town: N/A State: N/A Zip: N/A

ii. Latitude: N/A Longitude: N/A

Method of latitude/longitude determination **N/A**

_____ USGS map _____ Filed survey _____ Other

c. Topographic map. Provide a topographic map (or other appropriate map if a topographic map is unavailable) that shows the site location.

2. Owner Information.

a. Are you the owner of this land application site? _____ Yes _____ No **N/A**

b. If "No", provide the following information about the owner:

Name: N/A

Street or P.O. Box: N/A

City or Town: N/A State: N/A Zip: N/A

Phone: (_____) N/A

3. Applier Information:

a. Are you the person who applies, or who is responsible for application of, sewage sludge to this land application site?
_____ Yes _____ No **N/A**

b. If "No", provide the following information for the person who applies the sewage sludge:

Name: N/A

Street or P.O. Box: N/A

City or Town: N/A State: N/A Zip: N/A

Phone: (_____) N/A

c. List, on this form or an attachment, the numbers of all federal, state or local permits that regulate the person who applies sewage sludge to this land application site:

Permit Number:	Type of Permit:
N/A	N/A

4. Site Type. Identify the type of land application site from among the following: **N/A**

_____ Agricultural land _____ Reclamation site _____ Forest

_____ Public contact site _____ Other (describe _____

5. Vector Attraction Reduction. N/A

Are any vector attraction reduction requirements met when sewage sludge is applied to the land application site?

_____ Yes _____ No If "Yes", answer a and b.

a. Indicate which vector attraction reduction option is met: **N/A**

_____ Option 9 (Injection below land surface)

_____ Option 10 (Incorporation into soil within 6 hours)

b. Describe, on this form or on another sheet of paper, any treatment processes used at the land application site to reduce the vector attraction properties of sewage sludge:

N/A

6. Cumulative Loadings and Remaining Allotments.

(Complete Question 6 only if the sewage sludge applied to this site since July 20, 1993 is subject to the cumulative pollutant loading rates (CPLRs) - see instructions.)

a. Have you contacted DEQ or the permitting authority in the state where the sewage sludge subject to the CPLRs will be applied to ascertain whether bulk sewage sludge subject to the CPLRs has been applied to this site since July 20, 1993? _____ Yes _____ No **N/A**

If "No", sewage sludge subject to the CPLRs may not be applied to this site.

If "Yes", provide the following information:

Permitting authority: N/A

Contact person: N/A

Phone: (_____) N/A

b. Based upon this inquiry, has bulk sewage sludge subject to the CPLRs been applied to this site since July 20, 1993? _____ Yes _____ No If "No", skip the rest of Question 6. If "Yes", answer questions c - e. **N/A**

c. Site size, in hectares: _____ (one hectare = 2.471 acres) **N/A**

d. Provide the following information for every facility other than yours that is sending or has sent sewage sludge subject to the CPLRs to this site since July 20, 1993. If more than one such facility sends sewage sludge to this site, attach additional pages as necessary.

Facility name: N/A

Facility contact: N/A

Title: N/A

Phone: (_____) N/A

Mailing address.

Street or P.O. Box: N/A

City or Town: N/A State: N/A Zip: N/A

e. Provide the total loading and allotment remaining, in kg/hectare, for each of the following pollutants: **N/A**

	Cumulative loading	Allotment remaining
Arsenic		
Cadmium		
Copper		
Lead		
Mercury		
Nickel		
Selenium		
Zinc		

Complete Questions 7-12 below only if you apply sewage sludge, or you are responsible for land application of sewage sludge. Information required by these questions may be prepared as attachments to this form. Skip the following questions if you contract land application to someone else (as indicated under Section A.7) who is responsible for the operation.

7. Sludge Characterization. Use the table below or a separate attachment, provide at least one analysis for each parameter. **N/A**

PCBs (mg/kg)	_____
pH (S. U.)	_____
Percent Solids (%)	_____
Ammonium Nitrogen (mg/kg)	_____
Nitrate Nitrogen (mg/kg)	_____
Total Kjeldahl Nitrogen (mg/kg)	_____
Total Phosphorus (mg/kg)	_____
Total Potassium (mg/kg)	_____
Alkalinity as $CaCO_3$* (mg/kg)	_____

* Lime treated sludge (10% or more lime by dry weight) should be analyzed for percent $CaCO_3$.

8. Storage Requirements. N/A

Existing and proposed sludge storage facilities must provide an estimated annual sludge balance on a monthly basis incorporating such factors as storage capacity, sludge production and land application schedule. Include pertinent calculations justifying storage requirements.

Proposed sludge storage facilities must also provide the following information:

a. A sludge storage site layout on a 7.5 minute topographic quadrangle or other appropriate scaled map to show the following topographic features of the surrounding landscape to a distance of 0.25 mile. Clearly mark the property line.

1) Water wells, abandoned or operating
2) Surface waters
3) Springs
4) Public water supply(s)
5) Sinkholes
6) Underground and/or surface mines
7) Mine pool (or other) surface water discharge points
8) Mining spoil piles and mine dumps
9) Quarry(s)
10) Sand and gravel pits
11) Gas and oil wells
12) Diversion ditch(s)
13) Agricultural drainage ditch(s)
14) Occupied dwellings, including industrial and commercial establishments
15) Landfills or dumps
16) Other unlined impoundments
17) Septic tanks and drainfields
18) Injection wells
19) Rock outcrops

b. A topographic map of sufficient detail to clearly show the following information:

1) Maximum and minimum percent slopes
2) Depressions on the site that may collect water
3) Drainageways that may attribute to rainfall run-on to or runoff from this site
4) Portions of the site (if any) which are located with the 100-year floodplain and how the storage facility will be protected from flooding

c. Data and specifications for the storage facility lining material.

d. Plan and cross-sectional views of the storage facility.

e. Depth from the bottom of the storage facility to the seasonal high water table and separation distance to the permanent water table.

9. **Land Area Requirements.** Provide calculations justifying the land area requirements for land application of sewage sludge taking into consideration average soil productivity group, crop(s) to be grown and most limiting factor(s) of the sewage sludge, specifically Plant Available Nitrogen (PAN), Calcium Carbonate Equivalence (CCE), and metal loadings (CPLR sewage sludge only), where applicable. Relate PAN, CCE, and metal loadings to demonstrate the most limiting factor for land application.

10. **Landowner Agreement Forms.** Provide a properly completed Sewage Sludge Application Agreement Form (attached) for each landowner if sewage sludge is to be applied onto land not owned by the applicant. **N/A**

11. **Ground Water Monitoring. N/A**

    Are any ground water monitoring data available for this land application site? _____ Yes _____ No

    If "Yes", submit the ground water monitoring data with this permit application. Also submit a written description of the well locations, approximate depth to ground water, and the ground water monitoring procedures used to obtain these data.

12. **Land Application Site Information. N/A**

    (Complete Items a-d for sites receiving infrequent application - land application of sewage sludge up to the agronomic rate at a frequency of once in a 3 year period; complete Items a-h for sites receiving frequent application - land application of sewage sludge in excess of 70% the agronomic rate at a frequency greater than once in a 3 year period)

    a. Provide a general location map for each county which clearly indicates the location of all the land application sites.

    b. For each land application site provide a site plan of sufficient detail to clearly show the concerned landscape features and associated buffer zones (See instructions). Provide a legend for each landscape feature and the net acreage for each field taking into account the proposed buffer zones.

    c. In order to ensure that land application of bulk sewage sludge will not impact federally listed threatened or endangered species or federally designated critical habitat, the applicant must notify the field office of the U. S. Department of the Interior, Fish and Wildlife Service (FWS), by a letter, the proposed land application activities with the identification of the land application sites. The address and phone number of FWS are provided below.

       U.S. Fish and Wildlife Service
       Virginia Field Office
       P.O. Box 480
       White Marsh, VA 23183
       TEL: (804) 693-6694

       Provide a copy of the notification letter with this application form.

    d. Provide a soil survey map, preferably photographically based, with the field boundaries clearly marked. (A USDA-SCS soil survey map should be provided, if available.)

       Provide a detailed legend for each soil survey map which uses accepted USDA-SCS descriptions of the typifying pedon for each soil series (soil type). Complex associations may be described as a range of characteristics. Soil descriptions shall include as a minimum the following information.

       1) Soil symbol
       2) Soil series, textural phase and slope range
       3) Depth to seasonal high water table
       4) Depth to bedrock
       5) Estimated soil productivity group (for the proposed crop rotation)

    Item e - h are required for sites receiving frequent application of sewage sludge

    e. In order to verify the information provided in item d, characterize the soil at each land application site. Representative soil borings or test pits to a depth of five feet or to bedrock if shallower, are to be coordinated for the typifying pedon of each soil series (soil type). Soil descriptions shall include as a minimum the following information:

       1) Soil symbol
       2) Soil series, textural phase and slope range
       3) Depth to seasonal high water table
       4) Depth to bedrock
       5) Estimated soil productivity group (for the proposed crop rotation)

    f. Collect and analyze soil samples from each field, weighted to best represent each of the soil borings performed for

Item e. Using the table below or a separate attachment, provide at least one analysis per sample for each of the following parameters.

Soil Organic Matter (%)	_____
Soil pH (std. units)	_____
Cation Exchange Capacity (meq/100g)	_____
Total Nitrogen (ppm)	_____
Organic Nitrogen (ppm)	_____
Ammonia Nitrogen (ppm)	_____
Nitrate Nitrogen (ppm)	_____
Available Phosphorus (ppm)	_____
Exchangeable Potassium (mg/100g)	_____
Exchangeable Sodium (mg/100g)	_____
Exchangeable Calcium (mg/100g)	_____
Exchangeable Magnesium (mg/100g)	_____
Arsenic (ppm)	_____
Cadmium (ppm)	_____
Copper (ppm)	_____
Lead (ppm)	_____
Mercury (ppm)	_____
Molybdenum (ppm)	_____
Nickel (ppm)	_____
Selenium (ppm)	_____
Zinc (ppm)	_____
Manganese (ppm)	_____
Particle Size Analysis or USDA Textural Estimate (%)	_____

g. Relate the crop nutrient needs to anticipated yields, soil productivity rating and the various fertilizer or nutrient sources from sludge and chemical fertilizers. Describe any specialized agronomic management practices which may be required as a result of high soil pH. If the sludge is expected to possess an unusually high CCE or other unusual properties, provide a description of any plant tissue testing, supplemental fertilization or intensive agronomic management practices which may be necessary.

h. Using a narrative format and referencing any related charts, describe the proposed cropping system. Show how the crop rotation and management will be coordinated with the design of the land application system. Include any supplemental fertilization program, soil testing and the coordination of tillage practices, planting and harvesting schedules and timing of land application.

FACILITY NAME: Alexandria Renew Enterprises **VPDES PERMIT NUMBER:** VA0025160

SEWAGE SLUDGE APPLICATION AGREEMENT N/A

This sewage sludge application agreement is made on this date _____ between _____, referred to here as "landowner", and _____, referred to here as the "Permittee".

Landowner is the owner of agricultural land shown on the map attached as Exhibit A and designated there as _____ ("landowner's land"). Permittee agrees to apply and landowner agrees to comply with certain permit requirements following application of sewage sludge on landowner's land in amounts and in a manner authorized by VPDES permit number _____ which is held by the Permittee.

Landowner acknowledges that the appropriate application of sewage sludge will be beneficial in providing fertilizer and soil conditioning to the property. Moreover, landowner acknowledges having been expressly advised that, in order to protect public health, the following site restrictions must be adhered to when sewage sludge receives Class B treatment for pathogen reduction:

1. Food crops with harvested parts that touch the sewage sludge/soil mixture and are totally above the land surface shall not be harvested for 14 months after application of sewage sludge;
2. Food crops with harvested parts below the surface of the land shall not be harvested for 20 months after application of sewage sludge when the sewage sludge remains on the land surface for four months or longer prior to incorporation into the soil;
3. Food crops with harvested parts below the surface of the land shall not be harvested for 38 months after application of sewage sludge when the sewage sludge remains on the land surface for less than four months prior to incorporation into the soil;
4. Food crops, feed crops, and fiber crops shall not be harvested for 30 days after application of sewage sludge;
5. Animals shall not be grazed on the land for 30 days after application of sewage sludge;
6. Turf grown on land where sewage sludge is applied shall not be harvested for one year after application of the sewage sludge when the harvested turf is placed on either land with a high potential for public exposure or a lawn, unless otherwise specified by the State Water Control Board;
7. Public access to land with a high potential for public exposure shall be restricted for one year after application of sewage sludge;
8. Public access to land with a low potential for public exposure shall be restricted for 30 days after application of sewage sludge.
9. Tobacco, because it has been shown to accumulate cadmium, should not be grown on landowner's land for three years following the application of sewage sludge borne cadmium equal to or exceeding 0.5 kilograms/hectare (0.45 pounds/acre).

Permittee agrees to notify landowner or landowner's designee of the proposed schedule for sewage sludge application and specifically prior to any particular application to landowner's land. This agreement may be terminated by either party upon written notice to the address specified below.

Landowner:	Permittee:
_____	_____
Signature	Signature
_____	_____
Mailing Address	Mailing Address

FACILITY NAME: Alexandria Renew Enterprises VPDES PERMIT NUMBER: VA0025160

SECTION D. SURFACE DISPOSAL N/A

Complete this section only if you own or operate a surface disposal site. Provide the information for each active sewage sludge unit.

1. Information on Active Sewage Sludge Units.

a. Unit name or number: N/A

b. Unit location

i. Street or Route#: N/A

County: N/A

City or Town: N/A State: N/A Zip: N/A

ii. Latitude: N/A Longitude: N/A

Method of latitude/longitude determination

_____ USGS map _____ Filed survey _____ Other **N/A**

c. Topographic map. Provide a topographic map (or other appropriate map if a topographic map is unavailable) that shows the site location.

d. Total dry metric tons of sewage sludge placed on the active sewage sludge unit per 365-day period:

N/A dry metric tons.

e. Total dry metric tons of sewage sludge placed on the active sewage sludge unit over the life of the unit:

N/A dry metric tons.

f. Does the active sewage sludge unit have a liner with a minimum hydraulic conductivity of 1×10^{-7} cm/sec?

_____ Yes _____ No If "Yes", describe the liner or attach a description. **N/A**

N/A

g. Does the active sewage sludge unit have a leachate collection system? _____ Yes _____ No **N/A**

If "Yes", describe the leachate collection system or attach a description. Also, describe the method used for leachate disposal and provide the numbers of any federal, state or local permits for leachate disposal:

N/A

h. If you answered "No" to either f or g, answer the following: **N/A**

Is the boundary of the active sewage sludge unit less than 150 meters from the property line of the surface disposal site? _____ Yes _____ No If "Yes", provide the actual distance in meters: _____

i. Remaining capacity of active sewage sludge unit, in dry metric tons: _____ dry metric tons **N/A**

Anticipated closure date for active sewage sludge unit, if known: _____ (MM/DD/YYYY)

Provide with this application a copy of any closure plan developed for this active sewage sludge unit.

2. Sewage Sludge from Other Facilities.

Is sewage sludge sent to this active sewage sludge unit from any facilities other than yours? _____ Yes _____ No **N/A**

If "Yes", provide the following information for each such facility, attach additional sheets as necessary.

a. Facility name: N/A

b. Facility contact: N/A

Title: N/A

Phone: (_____) N/A

c. Mailing address:

Street or P.O. Box: N/A

City or Town: N/A State: N/A Zip: N/A

d. List, on this form or an attachment, the facility's VPDES permit number as well as the numbers of all other federal, state or local permits that regulate the facility's sewage sludge management practices:

Permit Number: Type of Permit:

N/A

e. Which class of pathogen reduction is achieved before sewage sludge leaves the other facility?
_____ Class A _____ Class B _____ Neither or unknown **N/A**

f. Describe, on this form or on another sheet of paper, any treatment processes used at the other facility to reduce pathogens in sewage sludge:
N/A

g. Which vector attraction reduction option is achieved before sewage sludge leaves the other facility? **N/A**

_____ Option 1 (Minimum 38 percent reduction in volatile solids)
_____ Option 2 (Anaerobic process, with bench-scale demonstration)
_____ Option 3 (Aerobic process, with bench-scale demonstration)
_____ Option 4 (Specific oxygen uptake rate for aerobically digested sludge)
_____ Option 5 (Aerobic processes plus raised temperature)
_____ Option 6 (Raise pH to 12 and retain at 11.5)
_____ Option 7 (75 percent solids with no unstabilized solids)
_____ Option 8 (90 percent solids with unstabilized solids)
_____ None or unknown

h. Describe, on this form or another sheet of paper, any treatment processes used at the other facility to reduce vector attraction properties of sewage sludge: N/A

i. Describe, on this form or another sheet of paper, any other sewage sludge treatment activities performed by the other facility that are not identified in e - h above: N/A

3. Vector Attraction Reduction. N/A

a. Which vector attraction reduction option, if any, is met when sewage sludge is placed on this active sewage sludge unit?

_____ Option 9 (Injection below land surface)
_____ Option 10 (Incorporation into soil within 6 hours)
_____ Option 11 (Covering active sewage sludge unit daily)

b. Describe, on this form or another sheet of paper, any treatment processes used at the active sewage sludge unit to reduce vector attraction properties of sewage sludge: _____

4. Ground Water Monitoring. N/A

a. Is ground water monitoring currently conducted at this active sewage sludge unit or are ground water monitoring data otherwise available for this active sewage sludge unit? _____ Yes _____ No

If "Yes", provide a copy of available ground water monitoring data. Also provide a written description of the well

locations, the approximate depth to ground water, and the ground water monitoring procedures used to obtain these data.

b. Has a ground water monitoring program been prepared for this active sewage sludge unit?
_____ Yes _____ No If "Yes", submit a copy of the ground water monitoring program with this application.

c. Have you obtained a certification from a qualified ground water scientist that the aquifer below the active sewage sludge unit has not been contaminated? _____ Yes _____ No

If "Yes", submit a copy of the certification with this application.

5. Site-Specific Limits.

Are you seeking site-specific pollutant limits for the sewage sludge placed on the active sewage sludge unit?
_____ Yes _____ No If "Yes", submit information to support the request for site-specific pollutant limits with this application.

Attachment for VPDES
Sewage Sludge Permit Application
Section A. General Information, 5.a

BIOSOLIDS APPLICATION SUMMARY – WET TONS

	2008	2009	2010	2011	2012
ESSEX	9,832	8,912	1,877	3,248	4,267
FAUQUIER	308			1,092	101
GOOCHLAND	265	1,329	2,329		2,393
KING GEORGE		372	911		
KING WILLIAM	314	1,960		1,736	
LOUDOUN	22			315	27
ORANGE		929	947	314	53
WESTMORELAND	1,017				
CAROLINE	316	264	2,779	1,392	
LOUISA	10,098	8,815	8,644	11,970	9,931
KING & QUEEN	185	1,364	2,587	1,491	3,799
RICHMOND	198				
CULPEPPER	22	40			
AMELIA					473
SPOTSYLVANIA			1,454		157
PRINCE GEORGE					53
FREDERICK			53	917	476
FLUVANNA				288	
RIVERSIDE BLENDING		81	237	131	
TOTALS	**22,576**	**24,065**	**21,818**	**22,894**	**21,729**

Alexandria Renew Enterprises

VPDES Permit Application

VA0025160

Public Notice Billing Information

WATER RECLAMATION AND REUSE ADDENDUM TO AN APPLICATION FOR A VIRGINIA POLLUTANT DISCHARGE ELIMINATION SYSTEM PERMIT OR A VIRGINIA POLLUTION ABATEMENT PERMIT

A. Applicant Information

1. Facility	Name	Alexandria Renew Enterprises		
	Location (street, route no. or other identifier)	1500 Eisenhower Ave Alexandria, VA 22314		
	Countyor city	Alexandria		
	Latititude	38 47' 47" N	Longitude	77 03' 34" W
2. Owner	Name	City of Alexandria, Virginia Sanitation Authority		
	Mailing address (street or P.O. box, city, state and zip code)	1500 Eisenhower Ave. Alexandria, VA 22314		
	Telephone number	703-549-3381		
	Fax number	703-519-9023		
	E-mail address	Karen.Pallansch@alexrenew.com		
3. Operator*	Name	Not applicable		
	Mailing address (street or P.O. box, city, state and zip code)	Not applicable		
	Telephone number	Not applicable		
	Fax number	Not applicable		
	E-mail address	Not applicable		

* If the operator of the facility is not the owner, complete A.3.

B. Permitting Information

1. This addendum is for a new (check all that apply):

   ☒ Reclamation system.
   ☐ Satellite reclamation system.
   ☒ Reclaimed water distribution system.
   ☒ End user[1].
   ☐ Not applicable. Proceed to B.2.

   Will the above new system or systems or end user be an expansion or modification[2] to an existing permitted system or end user[1]? (See numbered footnotes on the last page of the addendum)

   ☒ No. Proceed to item B.3.
   ☐ Yes. Proceed to item B.2.

2. This addendum is for an existing (check all that apply):

☐ Reclamation system.
☐ Satellite reclamation system.
☐ Reclaimed water distribution system.
☐ End user[1].

a. Provide the following information for each existing system or end user[1]:

System or End User[1] Name	Type of current permit issued (VPDES or VPA)	Permit Number	Permit Expiration Date
Not applicable	Not applicable	Not applicable	Not applicable

b. List by name all existing permitted systems or end users[1] in B.2.a of the addendum to be expanded or modified[2].

Not applicable

3. For reclamation systems, satellite reclamation systems, reclaimed water distribution systems and end users[1] that are (i) new, (ii) existing but unpermitted, or (iii) existing, permitted and to be expanded or modified[2]:

a. Is or will there be any combination of the systems, end users[1], or wastewater treatment works under common ownership or management, including those physically separated from each other?

☐ No. Proceed to B.3.d.
☒ Yes. Provide the following information for all systems, end users[1] or wastewater treatment works under common ownership or management:

Designation of Facility*	Name of System, End User[1] or Wastewater Treatment Works	Name of Common Ownership or Management
Wastewater Treatment Works	Alexandria Renew Enterprises	City of Alexandria, Viginia Sanitation Authority
Reclamation System	Alexandria Renew Enterprises	City of Alexandria, Viginia Sanitation Authority
Reclaimed Water Distribution System	Alexandria Renew Enterprises	City of Alexandria, Viginia Sanitation Authority
End User	Alexandria Renew Enterprises - Environmental Center	City of Alexandria, Virginia Sanitation Authority

* Designation of facility refers to reclamation system, satellite reclamation system, reclaimed water distribution system, end user[1] or wastewater treatment works.

b. Identify by name any combination of the systems (i.e., reclamation, satellite reclamation, reclaimed water distribution), end users[1] or wastewater treatment works with common ownership or management listed in B.3.a. to be covered by one permit. (See addendum instructions)

Wastewater Treatment Works, Reclamation System. amd Reclaimed Water Distribution System

c. Identify by name any of the systems, end users[1] or wastewater treatment works with common ownership or management listed in B.3.a. to be covered by separate permits.

Not applicable

d. Will a wastewater treatment works, reclamation system, satellite reclamation system or reclaimed water distribution system provide reclaimed water to irrigate property under common ownership or management with that wastewater treatment works, reclamation system, satellite reclamation system or reclaimed water distribution system?

☐ No.
☒ Yes. Provide the following information

Name of Wastewater Treatment Works or System (Reclamation, Satellite Reclamation, Reclaimed Water Distribution)	Location of Irrigation Property*
Alexandria Renew Enterprises - Reclaimed Water Distribution System	AlexRenew Environmental Center 1800 Limerick St./ Alexandria, VA 22314

* Refers to irrigation property that receives or will receive reclaimed water from and is under common ownership or management with the named wastewater treatment works or system in the first column. (See addendum instructions)

e. Will a reclaimed water distribution system that receives reclaimed water from a reclamation system or satellite reclamation system under separate ownership from the reclaimed water distribution system, distribute reclaimed water to end users other than the owner or management of the reclaimed water distribution system?

☐ Yes.
☐ No. **Not Applicable**

If no, will there be a service agreement established between the permittee of the reclamation system and the ownership or management of the reclaimed water distribution system?

☐ Yes.
☐ No. **Not Applicable**

4. For each end user[1], list all the reclamation systems, satellite reclamation systems and reclaimed water distributions from which the end user[1] will receive reclaimed water; and for each listed system, indicate the Level of reclaimed water (i.e., Level 1, Level 2 or both) that it will provide to the end user[1] and if the end user[1] has a service agreement or contract with that system.

Name of System (Reclamation, Satellite Reclamation, Reclaimed Water Distribution)	Level of Reclaimed Water Provided to End User[1] (Level 1, Level 2 or both)	Service Agreement or Contract with End User[1] (Yes/No)
Reclamation System	Level 1	Yes
Reclaimed Water Distribution System	Level 1	No

a: Will the end user[1] be under common ownership or management with any of the reclamation systems, satellite reclamation systems or reclaimed water distribution systems listed above?

☐ No.
☒ Yes.

If yes, will the end user[1] be covered by the permit of the system?

☒ No.
☐ Yes. Indicate the name of the system: _____

b. For all systems listed in B.4 with which the end user[1] has a service agreement or contract, has the end user[1] received notice of failure to comply with the service agreement or contract from any of these systems?

☐ No.
☐ Yes. If yes, indicate below the name(s) of the system(s) that issued notice(s) of failure to comply, the date of all notices and a brief description of cause for each notice. Additional information may be attached as necessary. If more than one system has issued a notice of failure to comply to the end user[1], complete D.1.a, D.1.b and D.1.c; D.2 if the reuse of the end user[1] includes irrigation, and E of the addendum. (See addendum instructions)

Name of System that Issued Notice	Date of Notice	Description of Cause for Notice
Not applicable	Not applicable	Not applicable

c. Will the end user[1] blend the reclaimed water that it receives from two or more of the systems listed in B.4?

☒ No.
☐ Yes.

If yes, will the end user[1] blend Level 1 and Level 2 reclaimed water?

☐ No. **Not Applicable**
☐ Yes.

d. Will the end user[1] distribute an portion of the blended reclaimed water to other end users not under common ownership or management with the end user[1]?

☒ No.
☐ Yes. If yes, complete applicable sections in C and D of this addendum. (See addendum instructions)

C. General Project Information (See addendum instructions)

For reclamation systems, satellite reclamation systems, and reclaimed water distribution systems, provide the following information. For projects that involve exclusively the distribution of reclaimed water, provide information for only items C.1., C.2., and C.6.

1. A description of the design and a site plan of each system. (See addendum instructions)

2. A general location map. (See addendum instructions)

3. Information regarding each wastewater treatment works that diverts or will divert effluent or source water to the reclamation system to be permitted.

a. Name of Wastewater Treatment Works	VPDES or VPA Permit No. of Facility	General VPDES Watershed Permit No.*
Alexandria Renew Enterprises	VA0025160	VAN010059

* Refers to a permit issued in accordance with the General VPDES Watershed Permit Regulation for Total Nitrogen and Total Phosphorus Discharges and Nutrient Trading in the Chesapeake Bay Watershed in Virginia (9VAC25-820), and applies only to facilities with existing individual VPDES permits.

b. List all unit wastewater treatment processes used at each wastewater treatment works prior to diversion to the reclamation system.

Coarse and fine screening, grit removal, primary settling, biological nitrogen removal, secondary settling, chemical flocculation, tertiary settling, gravity filtration, and UV disinfection

c. For only those wastewater treatment works listed in C.3.a with one or more significant industrial users (SIUs) indirectly discharging to the treatment works, provide the following information. (See addendum instructions)

Name of Wastewater Treatment Works	Name of All SIUs Indirectly Discharging to Each Wastewater Treatment Works	Approved Pretreatment Program (Yes/No/NA)*
Alexandria Renew Enterprises	Delta Electronics - Metal Finishing	Yes
	Gannett Springfield Office - Printing	Yes
	INOVA Fairfax - Hospital	Yes
	INOVA Alexandria - Hospital	Yes
	The Washington Post - Printing	Yes
	Alsco Inc - Commercial Laudry	Yes
	Covanta Alexandria/Arlington - Waste to Energy	Yes

* Refers to a pretreatment program developed in accordance with the VPDES Permit Regulation (9VAC25-31) or an equivalent program developed in accordance with the Water Reclamation and Reuse Regulation (9VAC25-740) for treatment works with SIUs, and approved by the Department of Environmental Quality. "NA" means "not applicable".

d. Provide analyses of the effluent or source water to be diverted by each wastewater treatment works to the reclamation system. (See addendum instructions)

Please see Attachments.

4. Information regarding the sewage collections system that diverts or will divert sewage to the satellite reclamation system to be permitted.

a. The name of the sewage collection system and the owner of that system.

Not applicable

b. For the treatment works at the end of the sewage collection system that receives or will receive all remaining sewage, provide:

Name of the treatment works: Not applicable

VPDES or VPA permit no.: Not applicable

c. Provide the following information for each SIU that discharges directly or indirectly to the sewage collection pipeline from which sewage or municipal wastewater is or will be diverted to the satellite reclamation system, excluding any downstream SIUs whose discharge has no potential to backflow to the satellite reclamation system intake.

Name of SIU	Location (Latitude & Longitude) of SIU	Distance Between SIU and Satellite Reclamation System*
Not applicable	Not applicable	Not applicable

* Distance along the length of the sewage collection system line or lines.

d. Provide concentrations of the following parameters for sewage or municipal wastewater to be diverted from the sewage collection system to the satellite reclamation system at the point of diversion. Analyses for other parameters may be provided, if available. Analyses of the sewage or municipal wastewater for pollutants of concern believed to be discharged by the SIUs identified in C.4.c may also be required. (See addendum instructions)

BOD_5 (mg/l) Not applicable

TSS (mg/l) Not applicable

Other (if available or required for SIU discharges):

Not applicable

5. Information regarding the reclamation system or satellite reclamation system to be permitted.

a. Indicate if the system will reclaim industrial wastewater as follows: (See addendum instructions)

- ☐ At an industrial facility for reuse exclusively on the property of the industrial facility. Complete C.5.b.
- ☐ At an industrial facility for reuse on and off, or exclusively off the property of the industrial facility
- ☒ As part of a mixture with sewage or municipal wastewater where the industrial wastewater composes less than or equal to 90 % of the mixture
- ☐ As part of a mixture with sewage or municipal wastewater where the industrial wastewater composes greater than 90 % of the mixture

b. For reuse of reclaimed industrial wastewater on exclusively the property of the industrial facility where the reclaimed water is produced, check all that apply: **Not Applicable**

- ☐ The reclaimed industrial wastewater for reuse does not contain or is not expected to contain pathogens or other constituents in sufficient quantities and with a potential for human contact that may be harmful to human health.
- ☐ Reuse of the reclaimed industrial wastewater involves a closed or isolated system that prevents worker contact with reclaimed water of the system.
- ☐ Other measures are in place including but not limited to, applicable federal and state occupational safety and health standards and requirements to adequately inform and protect employees from pathogens or other constituents that may be harmful to human health in the reclaimed industrial water to be reused at the industrial facility.

If none of the above in C.5.b. apply, complete the remainder of the addendum. If any of the above in C.5.b. apply, the reuse is excluded from the requirements of the Water Reclamation and Reuse Regulation. For any other water reclamation and reuse projects or portions of projects described in the addendum that do not qualify for this exclusion, complete remaining applicable sections of the addendum. (See addendum instructions)

c. Identify the quality of reclaimed water to be produced relative to the planned reuse or reuses of the reclaimed water: (See addendum instructions)

- ☒ Level 1
- ☐ Level 2
- ☐ Level 1 and Level 2
- ☐ Industrial (applicable to reclamation of industrial wastewater)
- ☐ Unknown (applicable to unlisted reuses)

d. List any other physical, chemical, and biological characteristics and constituent concentrations that may affect the intended reuse of the reclaimed water with respect to adverse impacts to public health or the environment. (See addendum instructions)

None

e. Indicate the designated design capacity of the reclamation system or satellite reclamation system. (See addendum instructions)

2 million gallons per day at peak flow capacity (3.7% of wastewater treatment work's design flow)

6. For each proposed reuse of reclaimed water (reclaimed from municipal or industrial wastewater) that is not listed in 9VAC25-740-90 A of the Water Reclamation and Reuse Regulation or for each reuse of reclaimed industrial wastewater that is listed in 9VAC25-740-90 A, provide the following information.

a. Describe the proposed reuse.

Not applicable

b. Describe any known risks of the proposed reuse to public health.

Not applicable

c. Describe the degree of public access and human exposure, including worker contact, to reclaimed water that is or will be caused by the proposed reuse.

Not applicable

d. Indicate the reclaimed water treatment necessary to prevent nuisance conditions by the proposed reuse.

Not applicable

e. Describe the potential for improper or unintended use of reclaimed water resulting from the proposed reuse. (See addendum instructions)

Not applicable

f. For new indirect potable reuse proposals, provide the following information:

(1) Name of the surface water to receive the reclamation system discharge and from which water will be withdrawn for potable water supply: (See addendum instructions)

Not applicable

(2) Receiving water body type:

- ☐ Lake or pond
- ☐ River or stream

Not Applicable

(3) Name of water treatment facility that will withdraw water for potable water supply: Not applicable

(4) Attach a map that shows the location of both the discharge from the reclamation system and the intake of the water treatment facility.

Not Applicable

(5) Approximate the shortest distance by way of the surface water named in C.6.f (1) above, between the discharge of the reclamation system and the intake of the water treatment facility: Not applicable (feet)

(6) Approximate the residence or transport time between the discharge of the reclamation system and the intake of the water treatment facility: Not applicable

(7) Approximate the mixing ratio of reclaimed water to ambient water at the intake of the water treatment facility: Not applicable

D. Reclaimed water management (RWM) plan

1. For a reclamation system, satellite reclamation system or reclaimed water distribution system that provides or will provide reclaimed water directly to an end user or end users, including an end user that is also the applicant or permittee, submit a Reclaimed Water Management (RWM) plan to contain the following information. (See addendum instructions)

a. A description and map of the expected service area to be covered by the RWM plan for the term of the permit for the project.

b. A current inventory of impoundments, ponds or tanks within the service area under D.1.a of the addendum, used for:

(1) System storage of reclaimed water and, as applicable, reject water storage that are under the control of the applicant or permittee; and

(2) Non-system storage of reclaimed water.

c. A water balance that accounts for the volumes of reclaimed water to be generated, stored, reused and discharged.

d. An example of service agreements or contracts to be established by the applicant or permittee with end users regarding implementation of and compliance with the RWM plan.

e. A description of monitoring of end users by the applicant or permittee to verify compliance with the terms of their agreements or contracts. Monitoring must include, at a minimum, metering the volume of reclaimed water consumed by end users.

f. An education and notification program.

g. A cross-connection and backflow prevention program.

h. A description of how the quality of reclaimed water in the reclaimed water distribution system will be maintained to meet standards for the intended reuse(s) of that reclaimed water.

2. Supplemental irrigation rates, nutrient management plans (NMPs) and site plans for irrigation reuse of reclaimed water.

a. Do the reuse categories identified within the service area under D.1.a of the addendum include irrigation reuses of reclaimed water as follows? (See addendum instructions)

☐ Bulk irrigation reuse.
☒ Non-bulk irrigation reuse.
☐ There will be no irrigation reuses. (Proceed to E.)

b. Will all irrigation with reclaimed water within the service area of the RWM plan be supplemental irrigation? (See addendum instructions)

☒ Yes. Explain how supplemental irrigation rates will be achieved for bulk and non-bulk irrigation reuse of reclaimed water.
☐ No. (Proceed to E.)

c. Indicate the concentration of total nitrogen (N) and total phosphorus (P) present or expected to be present in the reclaimed water for irrigation reuse:

☐ Annual average concentration of total N and total P greater than 8.0 mg/l and 1.0 mg/l, respectively (> Biological Nutrient Removal or BNR);

or

☒ Annual average concentration of total N and total P less than or equal to 8.0 mg/l and 1.0 mg/l, respectively (≤ BNR).

d. For each irrigation property listed under B.3.d of this addendum that is a bulk irrigation reuse site, submit the following with the RWM plan: (See addendum instructions)

(1) A nutrient management plan if: **Not Applicable**

(a) The reclaimed water applied to the irrigation reuse site is > BNR (see D.2.c above), or

(b) Independent of the reclaimed water nutrient content and in addition to irrigation reuse (i) there is no option to dispose of the reclaimed water through a VPDES permitted discharge, or (ii) there is an option to dispose of the reclaimed water through a VPDES permitted discharge, but the VPDES permit does not allow discharge of the full nutrient load under design flow. With the nutrient management plan, provide a copy of the letter from the Department of Conservation and Recreation, Division of Soil and Water Conservation approving the nutrient management plan.

(2) A site plan.

e. For all non-bulk irrigation reuse of reclaimed water that is > BNR (see D.2.c above) within the service area specified in D.1.a, including each irrigation property listed under B.3.d that is a non-bulk irrigation reuse site, describe measures that are or will be implemented to manage nutrient loads from the non-bulk irrigation reuse. Attach additional information as needed. (See addendum instructions)

Not applicable

E. Certification Statement (See addendum instructions)

I certify under penalty of law that this document and all attachments were prepared under my direction or supervision in accordance with a system designed to assure that qualified personnel properly gather and evaluate the information submitted. Based on my inquiry of the person or persons who manage the system, or those persons directly responsible for gathering the information, the information submitted is, to the best of my knowledge and belief, true, accurate, and complete. I am aware that there are significant penalties for submitting false information, including the possibility of fine and imprisonment for knowing violations.

Signature:		Date: 11·1·13
Name of person signing above (printed or typed):	Karen L. Pallansch	
Title:	Chief Executive Officer	
Signature:		Date:
Name of person signing above (printed or typed):		
Title:		

Question C.1 – A description of the design and a site plan of each system

As a part of its commitment to resource recovery, Alexandria Renew Enterprises (AlexRenew) is developing a reclaimed water system. AlexRenew's reclaimed water will be treated to Level 1 disinfection standards using Ultraviolet (UV) disinfection. The system will pull treated wastewater effluent from the facility's post-aeration tanks, which are situated downstream of the wastewater treatment plant's main UV disinfection system. This will allow the reclaimed water UV system to provide an additional 70 mJ/cm^2 UV dose (for a total of 100 mJ/cm^2) to meet Level 1 disinfection requirements. Residual chlorine will be added to the distribution system, as needed, to prevent build-up of bacteria and clogs in the distribution line.

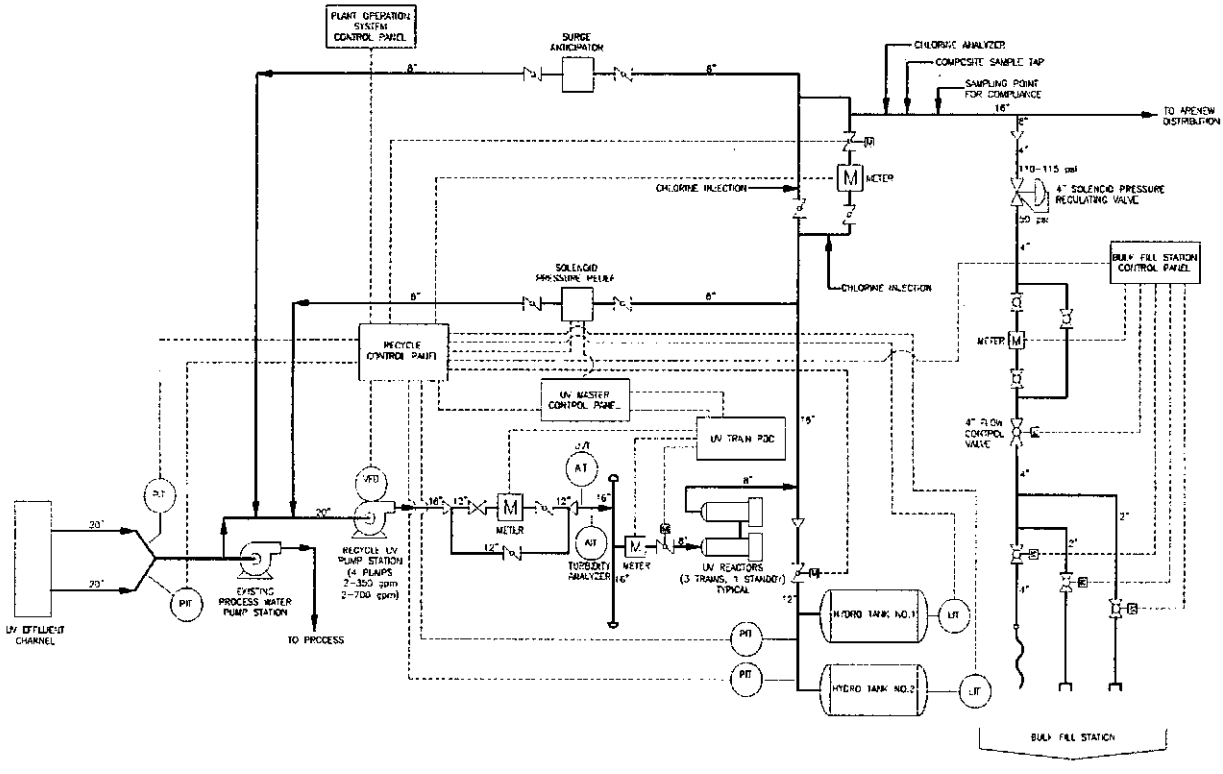

Figure 1 – Reclaimed Water Treatment Schematic

The major components of the reclaimed water system include:

- Four (4) horizontal split case pumps to pull treated wastewater effluent from the internal recycle line
- An in-line UV disinfection system to provide an additional 70 mJ/cm^2 UV dose to bring the total dose to 100 mJ/cm^2
- Two (2) hydropneumatic surge tanks to maintain the pressure in the system.

- Site improvements, including a new 16-inch reclaimed water force main that will extend to the edge of the plant property to facilitate distribution to AlexRenew's new Environmental Center, as well as future customers.

Additional information can be found in Section 3.2 of the Reclaimed Water Management Plan.

Question C.2 – A general location map

Figure 2 below is a general location map that shows the location of the reclaimed water system on AlexRenew's main plant site, the distribution line to AlexRenew's new Environmental Center, and the bulk fill station, which is being constructed for future users. Additional detail on the site can be found in Section 2.1 of AlexRenew's Reclaimed Water Management Plan.

Figure 2 – Site Plan and General Location Map

Question C.3d – Provide analyses of the effluent or source water to be diverted by each wastewater treatment works to the reclamation system.

	Maximum Daily Value		Average Daily Value			
Parameters	Value	Units	Value	Units	Number of Samples	Dates
pH (Minimum)	6.5	S.U.				1/1/12 - 12/31/12
pH (Maximum)	7.4	S.U.				1/1/12 - 12/31/12
Flow Rate	79.7	MGD	33.3	MGD	366	1/1/12 - 12/31/12
Temperature (Winter)	67	F.	63	F.	89	12/22/12-3/20/12
Temperature (Summer)	85	F.	79	F.	94	6/21/12-9/22/12

	Maximum Daily Value		Average Daily Value					
Parameters	Value	Units	Value	Units	Number of Samples	Analytical Method	ML/MDL	Dates
cBOD-5	4	mg/L	0	mg/L	366	SM 5210 B	2 mg/L	1/1/12 - 12/31/12
E. Coli	127	#/100 mL	4.6	#/100 mL	366	Colilert-18	1/100 ml	1/1/12 - 12/31/12
TSS	2.1	mg/L	0.1	mg/L	366	SM 2540 D	1 mg/L	1/1/12 - 12/31/12
Ammonia (as N)	1.7	mg/L	0.1	mg/L	366	EPA 350.1	0.01	1/1/12 - 12/31/12
Chlorine (Total)	N/A	N/A	N/A	N/A	N/A	N/A	N/A	N/A
Dissolved Oxygen	10.3	mg/L	8.8	mg/L	366	SM 4500 - O G	N/A	1/1/12 - 12/31/12
Total Kjeldhal Nitrogen	3.0	mg/L	1.1	mg/L	366	EPA 351.2	0.057	1/1/12 - 12/31/12
Nitrate + Nitrite Nitrogen	7.5	mg/L	2.8	mg/L	366	EPA 353.2	0.01	1/1/12 - 12/31/12
Oil and Grease	<5	mg/L	<5	mg/L	14	EPA 1664	5.0 mg/L	From 2008 permit
Phosphorus (Total)	0.19	mg/L	0.07	mg/L	366	EPA 365.4	0.01	1/1/12 - 12/31/12
Total Dissolved Solids	361	mg/L	347	mg/L	3	STM 2540-C	N/A	From 2008 permit

Question C.3d – Provide analyses of the effluent or source water to be diverted by each wastewater treatment works to the reclamation system. (Continued)

	Parameters	Sample Date: 1/8/2013		Analytical Method	ML/MDL
		Conc.	Units		
METALS (TOTAL RECOVERABLE), CYANIDE, PHENOLS, AND HARDNESS	ANTIMONY	ND	mg/L	EPA 200.7	0.005
	ARSENIC	ND	mg/L	EPA 200.7	0.005
	BERYLLIUM	ND	mg/L	EPA 200.7	0.0005
	CADMIUM	ND	mg/L	EPA 200.7	0.0005
	CHROMIUM	ND	mg/L	EPA 200.7	0.001
	COPPER	0.003	mg/L	EPA 200.7	0.002
	LEAD	ND	mg/L	EPA 200.7	0.005
	MERCURY	ND	mg/L	EPA 200.7	0.0002
	NICKEL	ND	mg/L	EPA 200.7	0.005
	SELENIUM	ND	mg/L	EPA 200.7	0.005
	SILVER	ND	mg/L	EPA 200.7	0.001
	THALLIUM	ND	mg/L	EPA 200.7	0.005
	ZINC	0.028	mg/L	EPA 200.7	0.005
	CYANIDE	ND	mg/L	EPA 335.4	0.005
	TOTAL PHENOLIC COMPOUNDS	ND	mg/L	EPA 420.4	0.02
	HARDNESS (AS CaCO3)	105	mg/L	SM 2340B	0.331
VOLATILE ORGANIC COMPOUNDS	ACROLEIN	ND	ug/L	EPA 624	50
	ACRYLONITRILE	ND	ug/L	EPA 624	50
	BENZENE	ND	ug/L	EPA 624	5
	BROMOFORM	ND	ug/L	EPA 624	5
	CARBON TETRACHLORIDE	ND	ug/L	EPA 624	5

Question C.3d – Provide analyses of the effluent or source water to be diverted by each wastewater treatment works to the reclamation system. (Continued)

	Parameters	Sample Date: 1/8/2013		Analytical Method	ML/MDL
		Conc.	Units		
VOLATILE ORGANIC COMPOUNDS	CLOROBENZENE	ND	ug/L	EPA 624	5
	CHLORODIBROMO-METHANE	ND	ug/L	EPA 624	5
	CHLOROETHANE	ND	ug/L	EPA 624	5
	2-CHLORO-ETHYLVINYL ETHER	ND	ug/L	EPA 624	10
	CHLOROFORM	ND	ug/L	EPA 624	5
	DICHLOROBROMO-METHANE	ND	ug/L	EPA 624	5
	1,1-DICHLOROETHANE	ND	ug/L	EPA 624	5
	1,2-DICHLOROETHANE	ND	ug/L	EPA 624	5
	TRANS-1,2-DICHLORO-ETHYLENE	ND	ug/L	EPA 624	5
	1,1-DICHLOROETHYLENE	ND	ug/L	EPA 624	5
	1,2-DICHLOROPROPANE	ND	ug/L	EPA 624	5
	1,3-DICHLORO-PROPYLENE	ND	ug/L	EPA 624	5
	ETHYLBENZENE	ND	ug/L	EPA 624	5
	METHYL BROMIDE	ND	ug/L	EPA 624	5
	METHYL CHLORIDE	ND	ug/L	EPA 624	5
	METHYLENE CHLORIDE	ND	ug/L	EPA 624	5
	1,1,2,2-TETRACHLORO-ETHANE	ND	ug/L	EPA 624	5
	TETRACHLORO-ETHYLENE	ND	ug/L	EPA 624	5
	TOLUENE	ND	ug/L	EPA 624	5
	1,1,1-TRICHLOROETHANE	ND	ug/L	EPA 624	5
	1,1,2-TRICHLOROETHANE	ND	ug/L	EPA 624	5

Question C.3d – Provide analyses of the effluent or source water to be diverted by each wastewater treatment works to the reclamation system. (Continued)

	Parameters	Sample Date: 1/8/2013		Analytical Method	ML/MDL
		Conc.	Units		
VOLATILE ORGANIC COMPOUNDS	TRICHLORETHYLENE	ND	ug/L	EPA 624	5
	VINYL CHLORIDE	ND	ug/L	EPA 624	5
ACID-EXTRACTABLE COMPOUNDS	P-CHLORO-M-CRESOL	ND	ug/L	EPA 625	5
	2-CHLOROPHENOL	ND	ug/L	EPA 625	5
	2,4-DICHLOROPHENOL	ND	ug/L	EPA 625	5
	2,4-DIMETHYLPHENOL	ND	ug/L	EPA 625	5
	4,6-DINITRO-O-CRESOL	ND	ug/L	EPA 625	5
	2,4-DINITROPHENOL	ND	ug/L	EPA 625	20
	2-NITROPHENOL	ND	ug/L	EPA 625	5
	4-NITROPHENOL	ND	ug/L	EPA 625	5
	PENTACHLOROPHENOL	ND	ug/L	EPA 625	10
	PHENOL	ND	ug/L	EPA 625	5
	2,4,6-TRICHLOROPHENOL	ND	ug/L	EPA 625	5
BASE-NEUTRAL COMPOUNDS	ACENAPHTHENE	ND	ug/L	EPA 625	5
	ACENAPHTHYLENE	ND	ug/L	EPA 625	5
	ANTHRACENE	ND	ug/L	EPA 625	5
	BENZIDINE	ND	ug/L	EPA 625	5
	BENZO(A)ANTHRACENE	ND	ug/L	EPA 625	5
	BENZO(A)PYRENE	ND	ug/L	EPA 625	5
	3,4 BENZO-FLUORANTHENE	ND	ug/L	EPA 625	5
	BENZO(GHI)PERYLENE	ND	ug/L	EPA 625	5

Question C.3d – Provide analyses of the effluent or source water to be diverted by each wastewater treatment works to the reclamation system. (Continued)

	Parameters	Sample Date: 1/8/2013		Analytical Method	ML/MDL
		Conc.	Units		
BASE-NEUTRAL COMPOUNDS	BENZO(K)FLUORANTHENE	ND	ug/L	EPA 625	5
	BIS (2-CHLOROETHOXY) METHANE	ND	ug/L	EPA 625	5
	BIS (2-CHLOROETHYL)-ETHER	ND	ug/L	EPA 625	5
	BIS (2-CHLOROISO-PROPYL) ETHER	ND	ug/L	EPA 625	5
	BIS (2-ETHYLHEXYL) PHTHALATE	ND	ug/L	EPA 625	5
	4-BROMOPHENYL PHENYL ETHER	ND	ug/L	EPA 625	5
	BUTYL BENZYL PHTHALATE	ND	ug/L	EPA 625	5
	2-CHLORONAPHTHALENE	ND	ug/L	EPA 625	5
	4-CHLORPHENYL PHENYL ETHER	ND	ug/L	EPA 625	5
	CHRYSENE	ND	ug/L	EPA 625	5
	DI-N-BUTYL PHTHALATE	ND	ug/L	EPA 625	5
	DI-N-OCTYL PHTHALATE	ND	ug/L	EPA 625	5
	DIBENZO(A,H) ANTHRACENE	ND	ug/L	EPA 625	5
	1,2-DICHLOROBENZENE	ND	ug/L	EPA 624	5
	1,3-DICHLOROBENZENE	ND	ug/L	EPA 624	5
	1,4-DICHLOROBENZENE	ND	ug/L	EPA 624	5
	3,3-DICHLOROBENZIDINE	ND	ug/L	EPA 625	5
	DIETHYL PHTHALATE	ND	ug/L	EPA 625	5
	DIMETHYL PHTHALATE	ND	ug/L	EPA 625	5
	2,4-DINITROTOLUENE	ND	ug/L	EPA 625	5

Question C.3d – Provide analyses of the effluent or source water to be diverted by each wastewater treatment works to the reclamation system. (Continued)

	Parameters	Sample Date: 1/8/2013		Analytical Method	ML/MDL
		Conc.	Units		
BASE-NEUTRAL COMPOUNDS	2,6-DINITROTOLUENE	ND	ug/L	EPA 625	5
	1,2-DIPHENYLHYDRAZINE	ND	ug/L	EPA 625	5
	FLUORANTHENE	ND	ug/L	EPA 625	5
	FLUORENE	ND	ug/L	EPA 625	5
	HEXACHLOROBENZENE	ND	ug/L	EPA 625	5
	HEXACHLOROBUTADIENE	ND	ug/L	EPA 625	5
	HEXACHLOROCYCLOPENTADIENE	ND	ug/L	EPA 625	5
	HEXACHLOROETHANE	ND	ug/L	EPA 625	5
	INDENO(1,2,3-CD)PYRENE	ND	ug/L	EPA 625	5
	ISOPHORONE	ND	ug/L	EPA 625	5
	NAPHTHALENE	ND	ug/L	EPA 625	5
	NITROBENZENE	ND	ug/L	EPA 625	5
	N-NITROSODI-N-PROPYLAMINE	ND	ug/L	EPA 625	5
	N-NITROSODI- METHYLAMINE	ND	ug/L	EPA 625	5
	N-NITROSODI-PHENYLAMINE	ND	ug/L	EPA 625	5
	PHENANTHRENE	ND	ug/L	EPA 625	5
	PYRENE	ND	ug/L	EPA 625	5
	1,2,4-TRICHLOROBENZENE	ND	ug/L	EPA 625	5

2013

ALEXANDRIA renew ENTERPRISES

Reclaimed Water Management Plan

Prepared for:
Virginia Department of Environmental Quality, Northern Regional Office
13901 Crown Court
Woodbridge, Virginia 22193

Submitted by:
Alexandria Renew Enterprises
Attn: Karen Pallansch, Chief Executive Officer
1500 Eisenhower Avenue
Alexandria, Virginia 22314

TABLE OF CONTENTS

1. OVERVIEW 1

1.1 BACKGROUND 1
1.2 PURPOSE AND STRUCTURE OF THIS DOCUMENT 1

2. SERVICE AREA 2

2.1 SERVICE AREA DESCRIPTION AND MAP 2
2.2 IMPACT ON POTABLE WATER SUPPLY 2

3. RECLAIMED WATER TREATMENT AND DISTRUTION 3

3.1 WASTEWATER TREATMENT OVERVIEW 3
3.1.1 Liquids Process 3
3.1.2 Solids Process 4
3.1.3 Significant Industrial Users 5
3.2 RECLAIMED WATER SYSTEM OVERVIEW 5
3.2.1 Reclaimed Water Treatment 5
3.2.2 Reclaimed Water Production and System Storage 6
3.2.3 Reclaimed Water Distribution 6

4. RECLAIMED WATER QUALITY AND MONITORING 8

4.1 ON-SITE MONITORING 11
4.1.1 Bacteria 11
4.1.2 pH 11
4.1.3 $CBOD_5$ 11
4.1.4 Turbidity 11
4.2 OFF-SITE MONITORING 12
4.2.1 Distribution System 12
4.2.2 End User Monitoring 12
4.3 PUBLIC NOTIFICATION 13
4.3.1 Notification of Quality Issues 13
4.3.2 Notification of Supply Interruptions 13

5. RECLAIMED WATER USES AND WATER BALANCE 14

5.1 RECLAIMED WATER USES 14
5.2 IRRIGATION (UNRESTRICTED ACCESS) 15
5.3 WATER BALANCE 15

6. RECLAIMED WATER PROGRAM IMPLEMENTATION 16

6.1 SYSTEM IDENTIFICATION AND SIGNAGE 16
6.2 CROSS CONNECTION AND BACKFLOW PREVENTION PROGRAM 17
6.2.1 Responsibilities 17
6.2.2 Types of Protection 19
6.2.3 Premises Requiring Backflow Prevention and Types of Protection Required 19

6.2.4 Periodic Testing and Inspection 20
6.2.5 Records 20
6.3 END USER EDUCATION 21

LIST OF FIGURES

Figure 1: AlexRenew Wastewater and Reclaimed Water Service Area Map 2
Figure 2: Liquids Treatment Process including Biological Reactor Basin 6 (Scheduled for Construction Completion Late 2013) and the Nutrient Management Facility (Scheduled for Construction Completion Early 2015) 4
Figure 3: Solids Treatment Process including the Centrate Pretreatment Facility (scheduled for Construction Completion Late 2013) 5
Figure 4: Reclaimed Water Treatment Process Diagram 7
Figure 5: Point of Compliance – Turbidity 9
Figure 6: Point of Compliance – Principal 10
Figure 7: Water Balane Including Annual and Seasonal Demand 16

LIST OF TABLES

Table 1: Regulatory Requirements for RWM Plans 1
Table 2: Significant Industrial Users 5
Table 3: Reclaimed Water Standards and Monitoring Requirements 8
Table 4: Reuse Category and Reuse Application 14

APPENDICES

Appendix A: Example Service Agreement – Distribution System End User A-1

1. OVERVIEW

1.1 BACKGROUND

Alexandria Renew Enterprises (AlexRenew) is developing a Reclaimed Water Program to produce Level 1 reclaimed water for end users within the City of Alexandria, Virginia. Reclaimed water will be distributed to end users through an on-site bulk fill station and an off-site distribution system. The system will be continually monitored to guarantee both safety and the high quality of reclaimed water that our customers expect.

1.2 PURPOSE AND STRUCTURE OF THIS DOCUMENT

The Virginia Water Reclamation and Reuse Regulations (9VAC25-740) require a Reclaimed Water Management (RWM) Plan for a reclamation system that provides reclaimed water directly to end users. This RWM Plan is intended to fulfill the requirements of this regulation and is being prepared in support of Virginia Pollutant Discharge Elimination System Permit No. VA0025160, issued by the Virginia Department of Environmental Quality (DEQ) with an effective date of June 1, 2009.

The requirements set forth by DEQ for a RWM Plan, as described in 9VAC25-740, are summarized in Table 1. This table also provides an indication of what sections of this document fulfill these requirements.

Table 1: Regulatory Requirements for RWM Plans

Regulatory Requirement	Section of Document
A description and map of the reclaimed water service area to be covered by this RWM Plan for the term of the permit.	Section 2.1 – Service Area Distribution and Map
A current inventory of impoundments, ponds or tanks that are used for system storage of reclaimed water and, as applicable, reject water storage under the control of the permittee, and non-system storage located within the service area of the RWM plan	Section 3.2.2 – Reclaimed Water Production and System Storage
A water balance that accounts for the volumes of reclaimed water to be generated, stored, reused and discharged (i.e., through a VPDES permitted outfall, back to a sewage collection system, or otherwise disposed). The water balance shall include projected volumes of seasonal and annual reclaimed water demand for each reuse category.	Section 5.3 – Water Balance
An example of service agreements or contracts to be established by the applicant or permittee with end users	Appendix A
A description of monitoring of end users by the applicant or permittee to verify compliance with the terms of their agreements or contracts. Monitoring shall include, at a minimum, metering the volume of reclaimed water consumed by end users.	Section 4.2.2 – End User Monitoring
An education and notification program	Section 4.3 – Notification Section 6.3 – User Education
A cross connection and backflow prevention program	Section 6.2 – Cross Connection and Backflow Prevention
A description of how the quality of reclaimed water in the reclaimed water distribution system shall be maintained to meet the standards for the intended reuse or reuses of the reclaimed water	Section 4.2.1 – Distribution System

2. SERVICE AREA

2.1 SERVICE AREA DESCRIPTION AND MAP

AlexRenew's reclaimed water service area boundary is consistent with the boundaries of the City of Alexandria, Virginia. This service area boundary is depicted in Figure 1. This map will be updated, as necessary, with each permit renewal or with the addition of end users, to reflect changes in the future.

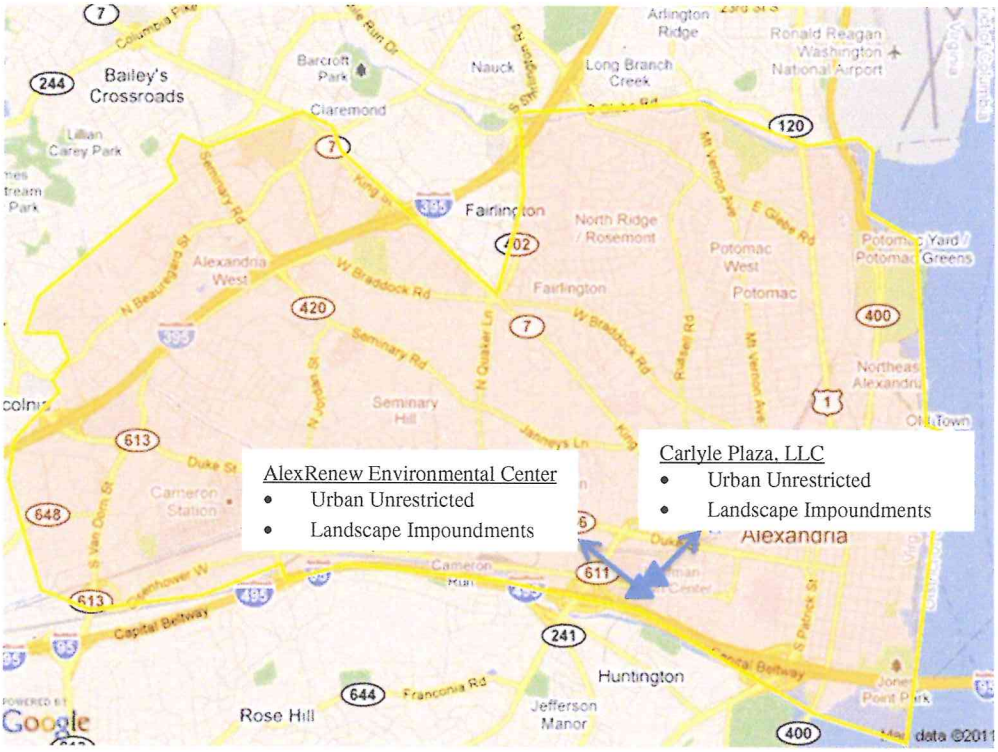

Figure 1: AlexRenew Wastewater and Reclaimed Water Service Area Map

AlexRenew's reclaimed water program will be developed in a series of phases and as demand warrants. Initially, the reclaimed water program will have two end users: AlexRenew and Carlyle Plaza, LLC. AlexRenew will use reclaimed water for commercial air conditioning, supplemental irrigation in public spaces, toilet flushing (commercial), and a decorative water feature at its new Environmental Center, which will be located at 1800 Limerick Street, Alexandria, VA,. The Environmental Center is currently under design and construction is scheduled for completion in 2015. Carlyle Plaza, LLC intends to use reclaimed water at its new multi-family residential and commercial space, located adjacent to the Environmental Center, for commercial air conditioning, supplemental irrigation in public spaces, toilet flushing (commercial), and a landscape impoundment.

2.2 IMPACT ON POTABLE WATER SUPPLY

There are no known public potable water supply wells, springs, or intakes within AlexRenew's reclaimed water service area boundaries. Residents of the City of Alexandria purchase potable water through Virginia American Water, which in turn purchases it from Fairfax County Water

Authority (Fairfax Water). Fairfax Water withdraws and treats water from the Potomac and Occoquan Rivers. Their intakes are outside of AlexRenew's service area.

3. RECLAIMED WATER TREATMENT AND DISTRUTION

AlexRenew is currently permitted to treat 54 million gallons per day (MGD) annual average daily flow (AADF) of wastewater. AlexRenew operates under the Virginia Pollutant Discharge Elimination System (VPDES) Permit #VA0025160. AlexRenew's facility serves a population of approximately 350,000, including the City of Alexandria and portions of Fairfax County. AlexRenew has an approved pretreatment program for its seven Significant Industrial Users (SIUs) that meets the requirements of the VPDES Permit Regulations.

The remainder of this section provides a brief overview of our wastewater treatment process and reclaimed water system.

3.1 WASTEWATER TREATMENT OVERVIEW

AlexRenew's treatment processes include preliminary and primary treatment, Biological Nutrient Removal (BNR), chemical addition for phosphorous removal, and Ultraviolet (UV) disinfection. Treated effluent is discharged into Hunting Creek and eventually flows into the Potomac River, which is part of the Chesapeake Bay watershed. AlexRenew also produces Class A Exceptional Quality Biosolids, which are land applied throughout the Commonwealth of Virginia.

3.1.1 Liquids Process

AlexRenew's facility is designed to treat an average annual flow of 54 MGD and a peak instantaneous flow of 108 MGD. Preliminary treatment consists of coarse screening, fine screening, and vortex grit removal. Water flows from preliminary treatment into rectangular settling tanks for primary treatment followed by pumping to the Biological Reactor Basins (BRBs) for nutrient removal. Beginning in 2016, when nitrogen loading is high, a portion of the primary effluent will be diverted to a new Nutrient Management Facility and returned to the BRBs when nitrogen loading is lower.

In the BRBs, primary effluent flows are added to activated sludge for nitrogen removal. Each of the first five BRBs is divided into anoxic and aerobic zones, where each zone creates optimal conditions for nitrogen removal. In the aerobic zones, fine bubble membrane diffusers add dissolved oxygen to promote nitrification; in the anoxic zones, supplemental carbon sources such as methanol or glycerin based compounds are added to promote denitrification. A new sixth BRB – which will be brought online in late 2013 – will provide a final anoxic zone. In the rectangular secondary settling tanks, ferric chloride is added to aid settling and remove phosphorous. The majority of the settled activated sludge is then recycled to the BRBs while the remainder is diverted to the solids handling system.

After secondary settling the flow is pumped a third time to the tertiary treatment process. Chemical addition with aluminum sulfate (alum) occurs to coagulate the phosphorous. These particles then settle out on inclined plate settlers. This step is followed by gravity filtration through sand filters to remove additional solids. Disinfection is accomplished through an open channel UV system.

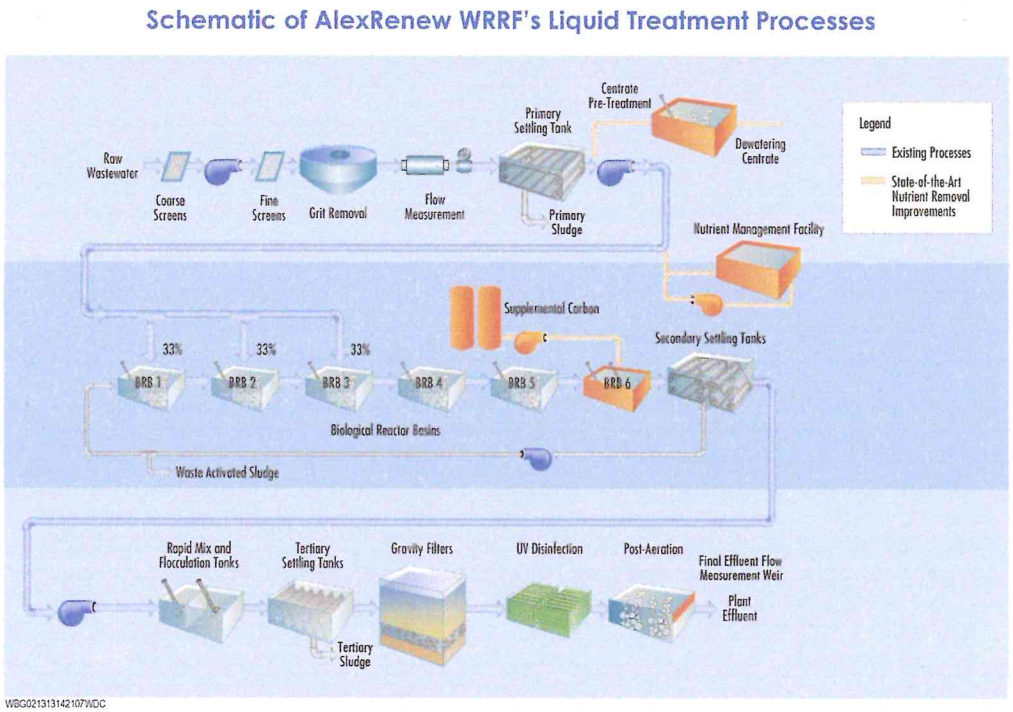

Figure 2: Liquids Treatment Process including Biological Reactor Basin 6 (Scheduled for Construction Completion Late 2013) and the Nutrient Management Facility (Scheduled for Construction Completion Early 2015)

3.1.2 Solids Process

Sludge from the primary and tertiary settling tanks are blended and thickened in gravity thickeners. Wasted activated sludge is thickened mechanically in centrifuges and then combined with the gravity thickened sludge. The liquid removed from both of these thickened sludges is returned to the facility for treatment.

The blended thickened sludge passes through two sludge screening presses to remove fibrous materials before it is pumped through heat exchangers where it is heated. The Pasteurization process provides pathogen reduction by heating the sludge to a set temperature (158°F) and holding it for a predetermined amount of time (minimum 30 minutes). The pasteurized sludge is then sent back through the heat exchangers to transfer heat to un-pasteurized sludge. The cooled, pasteurized sludge then enters one of four mesophilic anaerobic digesters. The goal of the digesters is to reduce the vector attraction in the sludge, to reduce the mass of biosolids for disposal, and to produce methane gas, which is used for mixing and as an on-site energy source.

Digested biosolids are dewatered through a centrifuge with the addition of polymer. The resulting product is approximately 28% solids and meets the 40 CFR 503 Class A requirements. The biosolids are land applied on agricultural farmland throughout Virginia.

The ammonia-rich liquid (centrate) removed from the biosolids is currently returned directly to the BRBs. In late 2013, a new Centrate Pretreatment Facility will begin treating this centrate with innovative processes like deammonification before returning it to the BRBs. Deammonification uses substantially less oxygen (energy) and no supplemental carbon compared to a traditional nitrification/denitrification process.

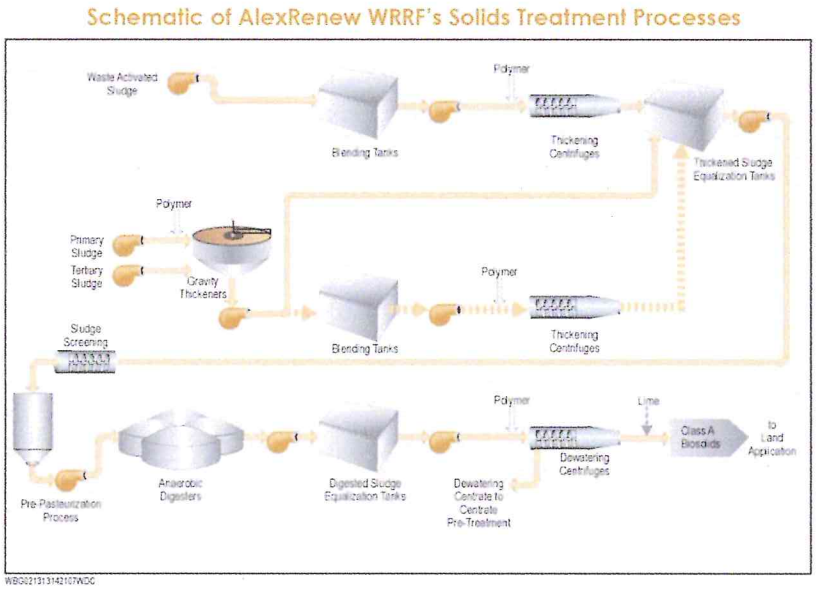

Figure 3: Solids Treatment Process including the Centrate Pretreatment Facility (scheduled for Construction Completion Late 2013)

3.1.3 Significant Industrial Users

Table 2 lists the Significant Industrial Users (SIUs) that contribute wastewater to AlexRenew and identifies the SIC Code/Description and NAICS Code/Description.

Table 2: Significant Industrial Users

Significant Industrial User	SIC Code/Description	NAICS Code/Description
Delta Electronics - Metal Finishing	3663, 3471	334220, 332813
INOVA Fairfax Hospital - Hospital	8062, 8071	622110, 621511, 621512
Gannett Springfield Offset - Printing	2711, 2752	511110, 323110
The Washington Post - Printing	2711, 2752	511110, 323110
Alsco, Inc - Commercial Laundry	7218	812332
INOVA Alexandria Hospital - Hospital	8062, 8071	622110, 621511, 621512
COVANTA Alexandria/Arlington - Waste to Energy	4953, 4911	562213, 221119

3.2 RECLAIMED WATER SYSTEM OVERVIEW

3.2.1 Reclaimed Water Treatment

AlexRenew's reclaimed water will be treated to Level 1 disinfection standards using UV disinfection. The system will pull the effluent from the facility's post-aeration tanks, which are

situated downstream of the treatment plant's main UV disinfection system (Figure 4). This will allow the in-line reclaimed water UV system to provide an additional 70 mJ/cm^2 UV dose (for a total of 100 mJ/cm^2) to meet Level 1 disinfection system requirements. At this point the reclaimed water meets the bacterial standards for Level 1 reclaimed water. As further described in Section 4.2.1, residual chlorine will be added as needed to prevent build-up of bacteria and clogs in the distribution line.

3.2.2 Reclaimed Water Production and System Storage

Reclaimed water will be pumped through one of four pumps, which during the initial phase of construction will have a total pumping capacity of 2 MGD. Two pumps will have a capacity of 350 gallons per minute (gpm) and two pumps will have a capacity of 700 gpm. The 2 MGD capacity assumes that one of the larger pumps is out of service. The system will have the capability to expand to an ultimate firm capacity of 6 MGD and additional capacity will be added, as demand warrants.

The pumping system will include two hydropneumatic tanks (Figure 4) that will maintain the pressure in the system and supply water to customers under low system demands that are less than the allowable pump turndown speeds. Each tank has a capacity of 3,330 gallons, but to maintain the pressure requirements (110-115 psi) of the system, only 328 gallons per tank will be reclaimed water. The rest of the tank volume will be compressed air. The hydropneumatic tanks will also provide surge control for sudden flow rate changes causing pressure transients.

Reclaimed water, as needed, will be drawn from the post-aeration tank, treated, and distributed. No system storage will be provided.

3.2.3 Reclaimed Water Distribution

A 16-inch pipeline will extend to the end of the main plant property and will transfer reclaimed water to the off-site distribution system.

On the main plant site, a bulk fill station is being designed to provide future reclaimed water for reuse in approved regulatory categories, such as construction and unrestricted irrigation. The station will be equipped with a card reader and closed circuit television allowing remote, confirmation of users, and monitoring. Flow will be metered and delivered into a tanker at a rate of 150 gpm.

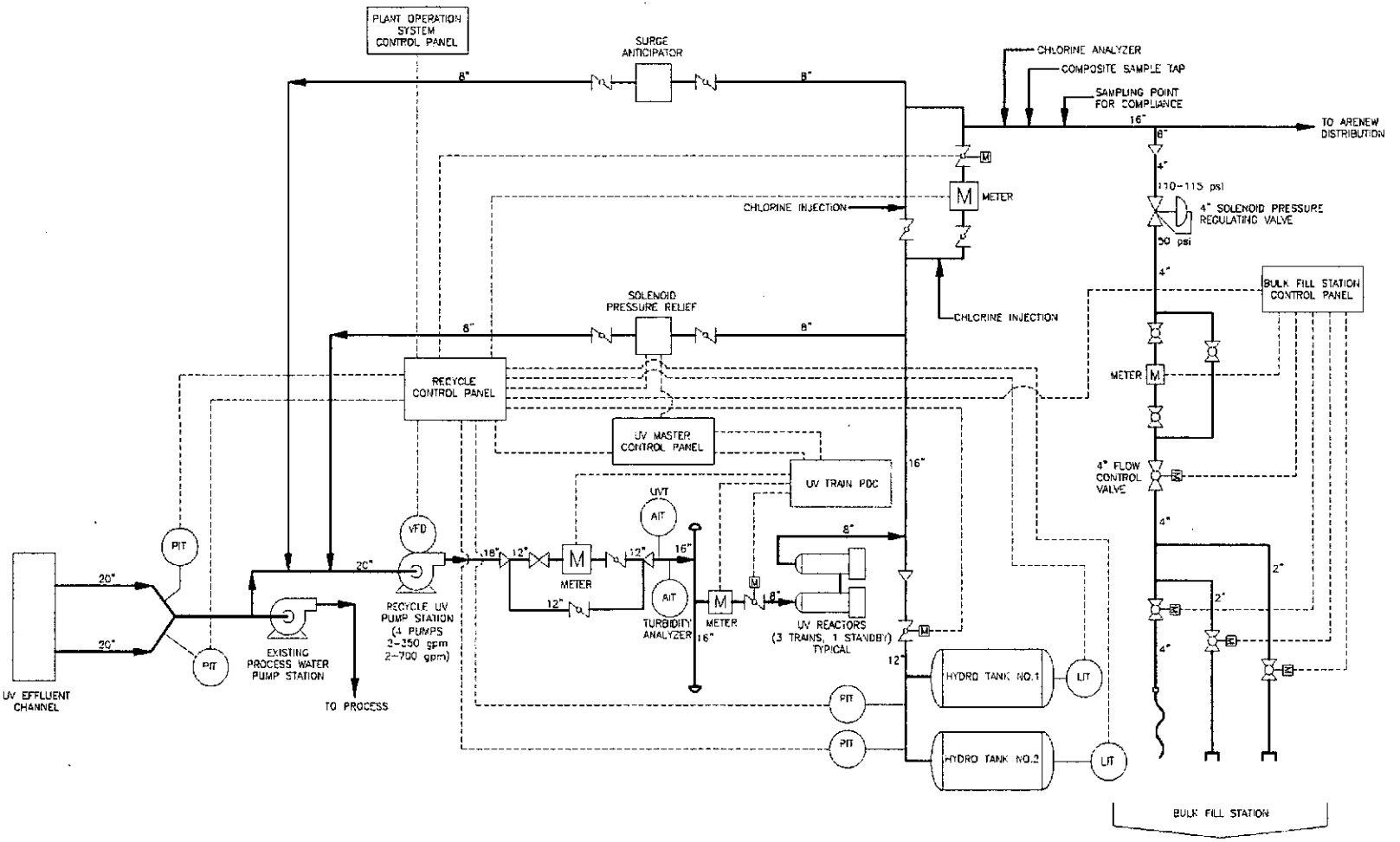

Figure 4: Reclaimed Water Treatment Process Diagram

4. RECLAIMED WATER QUALITY AND MONITORING

The reclaimed water quality furnished to end users by AlexRenew will be in compliance with the standards established by DEQ for Level 1 usage per 9VAC25-740-70. The minimum water quality for Level 1 reclaimed water is summarized in Table 3.

Table 3: Reclaimed Water Standards and Monitoring Requirements

Parameter	Standard	Corrective Action Threshold (CAT)	Monitoring Point	Monitoring Frequency	Monitoring Requirements
Bacterial Standard - E. coli	≤11 colonies/ 100 mL	>35 colonies/ 100 mL	Point of compliance – Principal (Grab)	Daily	Grab samples taken between 10:00 am and 4:00 pm
pH	6.0-9.0 SU	-	Point of compliance – Principal (Grab)	Daily	Grab
$CBOD_5$	≤8 mg/L	-	Point of compliance – Principal (Composite)	Daily	Same type and frequency as specified for sewage treatment works in the Sewage Collection and Treatment Regulations 9VAC25-790
Turbidity	≤2 NTU	>5 NTU	Point of compliance – Turbidity	Continuous	Online monitoring

AlexRenew will install all necessary metering devices, samplers, and related appurtenances to monitor reclaimed water at the points of compliance (POCs). The point of compliance is defined as "the point at which compliance with the standards" in the water reclamation and reuse regulations is required. The "point" must be located "after all reclaimed water treatment and prior to discharge to a reclaimed water distribution system." The principal POC will be located immediately before the distribution system. The POC for turbidity will be at an online turbidity meter to be located immediately upstream of the reclaimed water UV disinfection system. The POCs for all parameters are shown in Figure 5 and Figure 6.

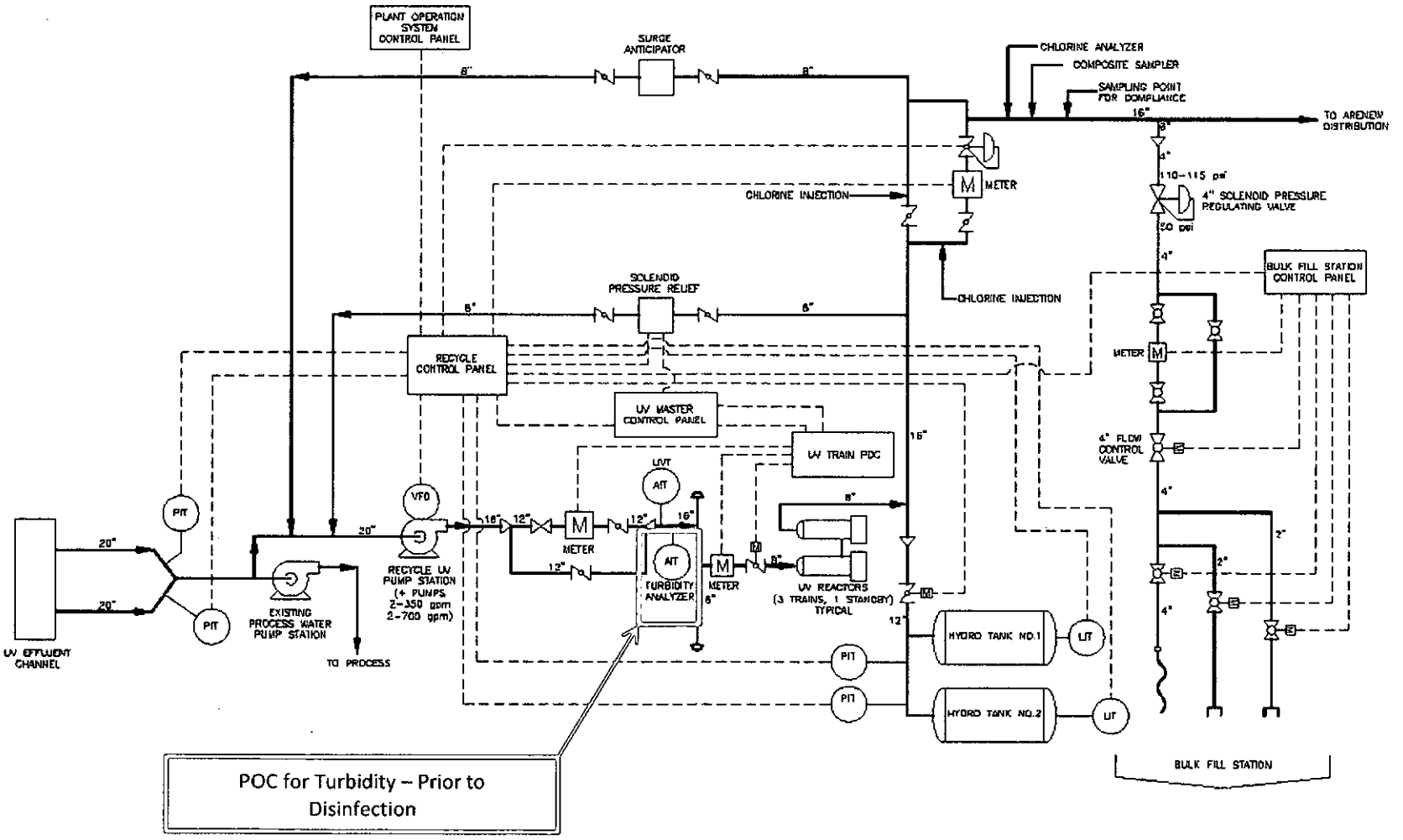

Figure 5: Point of Compliance – Turbidity

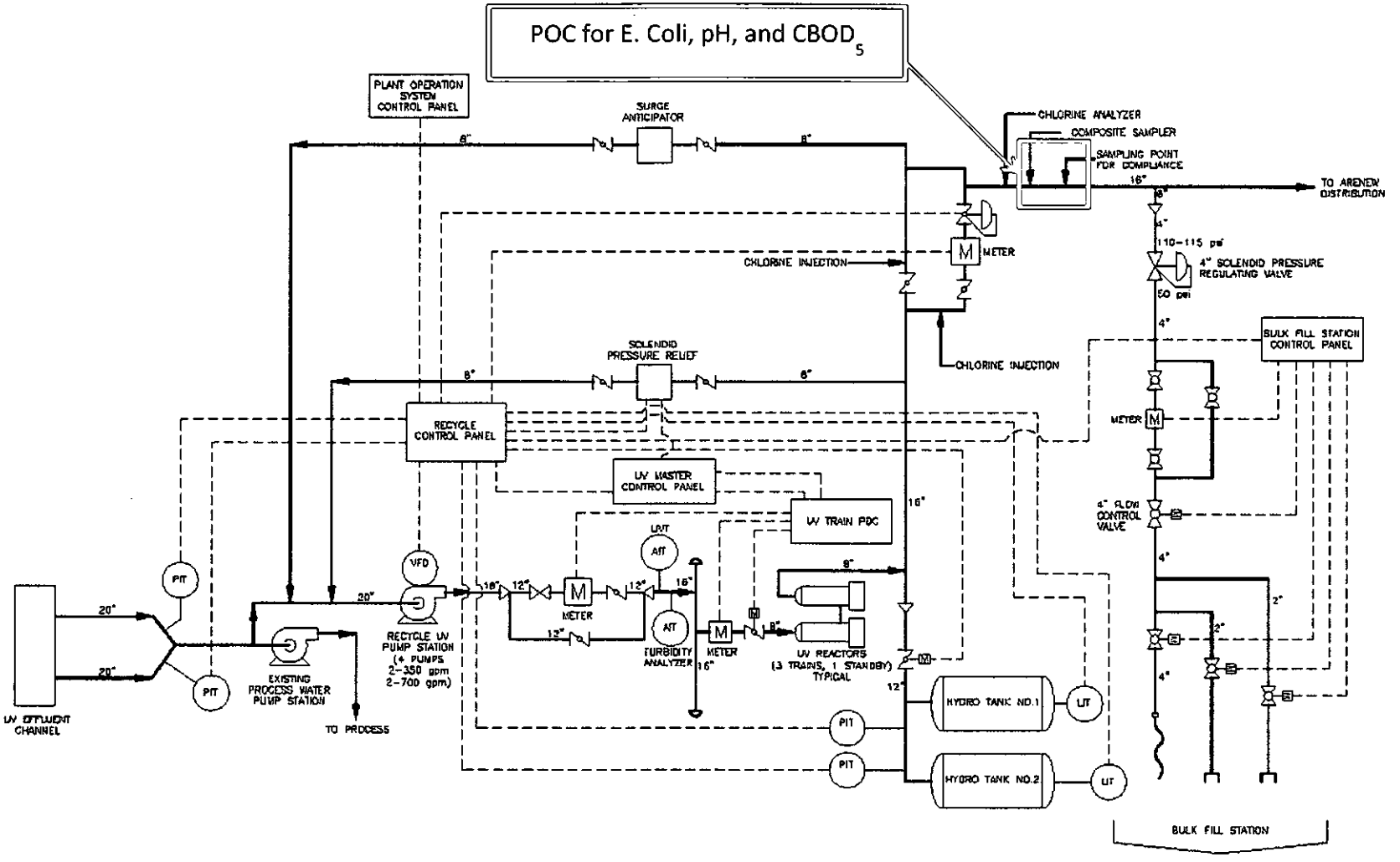

Figure 6: Point of Compliance – Principal

4.1 ON-SITE MONITORING

4.1.1 Bacteria

Per 9VAC25-740-80, bacteria may be monitored using fecal coliform, E. coli, or Enterococci. Grab samples for bacteriological monitoring must be collected at a time when the wastewater characteristics are most representative of the treatment facilities and disinfection processes for water reuse. Compliance with the geometric mean standards for bacteria will be determined monthly, based on all bacteriological monitoring results for that month. Monitoring of the Corrective Action Threshold (CAT) will be based on the bacteriological monitoring results determined for each day a sample is collected.

As AlexRenew already monitors E. coli, this is the indicator organism that will be monitored for the reclaimed water system. Samples will be taken at the POC – Principal, as depicted in Figure 6. Samples will be collected daily between 10:00 a.m. and 4:00 p.m. and analyzed using the Colilert-18 method.

If the results approach the CAT, operations staff will refer to the Operation and Maintenance Manual for the reclaimed water system for the appropriate response. If the results reach or exceed the CAT, operations staff will immediately initiate a review of treatment operations and data to identify the cause of the results and bring the reclaimed water back into compliance with the standards. Two consecutive E. coli results that reach the CAT will be treated as a permit violation.

4.1.2 pH

AlexRenew will conduct monitoring for pH in compliance with DEQ requirements, which indicate that samples for pH shall be grabs samples collected at least daily. Compliance with the range of the pH standard will be determined daily based on the pH of the samples.

pH will be analyzed at least once per day at the same POC as the bacteria sample. pH samples will be analyzed using Standard Method 4500-H/B, 18th Edition. The pH must be within 6.0-9.0 standard units (SU).

4.1.3 $CBOD_5$

The monthly average for $CBOD_5$ must be <8 mg/L. Per 9VAC25-740-80, sampling must be the same sampling type and frequency as the VPDES effluent permit requirements. To comply with this requirement, AlexRenew will collect 24-hour composite samples and analyze them daily. The samples will be analyzed according to SM 5210B, 18th Edition. Compliance with the $CBOD_5$ standard will be determined monthly, based on the arithmetic mean of all samples collected during the month.

4.1.4 Turbidity

The daily average of discrete measurements recorded over a 24-hour period for turbidity are required to be less than or equal to 2.0 nephelometric turbidity units (NTU) for Level 1 reclaimed water. Turbidity will be monitored continuously, upstream of the reclaimed water UV

disinfection system using an online turbidity meter as the POC. The meter will report continuously to SCADA.

Turbidity will be monitored continuously to ensure that reclaimed water does not reach the CAT. The CAT for turbidity is > 5 NTU. If the results approach the CAT, operations staff will be notified by an automated alarm and immediately initiate a review of treatment operations and data to identify the cause of the high results and bring the reclaimed water back into compliance with the standards.

If the turbidity is not below the CAT within one hour of exceedance, the water will be considered substandard and cease being distributed to end users until the situation is corrected and the turbidity is within the standards. AlexRenew's system will initiate this process automatically should the turbidity not be corrected within the allotted time frame. Operations staff will manually restart the system once the problem has been corrected. Failure to correct the turbidity or divert the substandard water within one hour will be treated as a permit violation and end users will be notified at this time. Staff will utilize all available resources to analyze the issue(s) and take appropriate steps to bring the system back into compliance, as well as determine and implement steps of the intent to avoid repeating this non-compliant condition.

If the turbidity meter is out of service, either for corrective or preventive maintenance, operations staff may manually collect samples at four-hour intervals for a maximum of five days. After the five days, online monitoring will either resume or distribution of reclaimed water will cease and shall not resume until the meter has been placed back in service.

4.2 OFF-SITE MONITORING

4.2.1 Distribution System

Residual chlorine will be added as needed to the distribution system to prevent build-up of bacteria and clogs in the distribution line. In addition, the quality of the reclaimed water in the distribution system will be maintained through periodic flushing. During the flushing, the water will be monitored for changes in color, smell, or general appearance. If the water quality appears questionable, the system will be flushed more frequently. Specific details on both chemical addition and flushing activity will be included in the Operations and Maintenance manual.

4.2.2 End User Monitoring

Monitoring for each end user will be specified in individual service agreements. Monitoring will include, at a minimum, flow measurement and reporting. In addition, AlexRenew will conduct periodic inspections to verify compliance with the terms and conditions of service agreements and reclaimed water to ensure the operational compliance of the on-site system. Actual usage by end users will be measured using flow meters to be installed and maintained by the end user. AlexRenew will conduct monthly visits to record meter readings and verify that the meters are appear to be functioning as intended. Periodically, these visits will include review of end user maintenance and inspection records.

4.3 PUBLIC NOTIFICATION

In compliance with the education and notification requirements of 9VAC25-740, AlexRenew will notify end users and inform the public via notifications on our website of any treatment failures that could adversely impact human health or result in loss of reclaimed water service.

4.3.1 Notification of Quality Issues

In the event that non-compliant reclaimed water has been discharged to the distribution system, AlexRenew will notify end users of the specific noncompliance and advise them of the precautions to be taken to protect public health when using the reclaimed water in areas accessible to the public or where human contact with the reclaimed water is likely. These precautions will be implemented for a period of seven days or more, depending on the frequency and magnitude of the treatment failure. AlexRenew will notify end users and any potentially affected members of the public, if, at any time during the production and distribution of reclaimed water, public health is compromised.

If reclaimed water does not meet any of the standards described in this section more than once in a seven-day period and that substandard water has been provided to an end user, AlexRenew will:

- Discontinue all conveyance of reclaimed water
- Inform end users of the treatment failure (via phone or email)
- Post an alert on its website to notify the public
- Advise end users on precautions to protect public health and recommendations for communicating this information to employees and the general public
- Identify and correct the source of the treatment failure.

The end user will:

- Post temporary signs that explain the treatment failure and its effect on the end use
- Warn the public to avoid contact areas that have recently received reclaimed water
- Direct the public where to get more information about reclaimed water and the treatment failure.
- These precautions will remain in place for seven days or longer depending on the severity of the treatment failure. Interruptions to the reclaimed water supply or treatment failure must also be reported to DEQ including any notification of end users or the public.

4.3.2 Notification of Supply Interruptions

Where reclaimed water service to end users is interrupted due to planned causes, such as scheduled repairs, AlexRenew will provide advance notice to end users of the anticipated date and duration of the interrupted service. For each interruption or loss of reclaimed water supply, AlexRenew will report:

- The service area affected

- The initial date, time, duration, and cause of the occurrence, indicating whether it was planned or unplanned
- A description of steps taken to correct and prevent recurrence of interruption or loss of reclaimed water supply.

In the event that reclaimed water service to end users is disrupted by unplanned causes and service cannot be restored within eight hours of discovery, AlexRenew shall notify end users and the affected public of the service interruption.

5. RECLAIMED WATER USES AND WATER BALANCE

5.1 RECLAIMED WATER USES

Per the Virginia Water Reclamation and Reuse Regulation (9VAC25-740-90), there are six major reuse categories:

- Urban (unrestricted access)
- Irrigation (unrestricted access)
- Irrigation (restricted access)
- Landscape Impoundments
- Construction
- Industrial.

Each reuse category is defined with regard to two levels of treatment:

- Level 1 reclaimed water requires secondary treatment with filtration and a high level disinfection. Level 1 reclaimed water may be used for each of the aforementioned reuse categories.

- Level 2 reclaimed water requires secondary treatment and standard disinfection. Level 2 reclaimed water can be used for irrigation and storage in areas with restricted access, construction activities, and industrial uses. Level 2 reclaimed water cannot be used in areas where public access is unrestricted.

AlexRenew's reclaimed water system will produce Level 1 reclaimed water, which will be available for all of the aforementioned use categories. Table 4 provides a summary overview of the reuse applications for each reuse category.

Table 4: Reuse Category and Reuse Application

Reuse Category	Reuse Application
Urban – Unrestricted Access	• Landscape irrigation in public access areas (e.g., golf courses, cemeteries, public parks, school yards, athletic fields) • Commercial toilet flushing • Commercial car washes • Commercial air conditioning systems
Irrigation – Unrestricted Access	• Irrigation for any food crops not commercially processed

Landscape Impoundments	• Decorative pools and fountains • Decorative ponds or lagoons
Construction	• Dust control • Soil compaction
Industrial	• Power washing • Boiler feed • Cooling towers

5.2 IRRIGATION (UNRESTRICTED ACCESS)

Irrigation (unrestricted access) uses will be limited to supplemental irrigation and will thus only be used to supplement natural precipitation. Irrigation using reclaimed water will not occur during periods of rainfall or when the ground is saturated, frozen, or covered with ice.

To ensure supplemental irrigation, AlexRenew will provide educational materials to potential end users explaining supplemental irrigation and require that non-bulk irrigation end users install irrigation systems that:

- Minimize ponding and/or runoff
- Use low trajectory nozzles to minimize aerosol formation of the reclaimed water within 100 feet of homes or outdoor eating, drinking, or swimming facilities
- Prevent reclaimed water from coming into contact with drinking fountains, water coolers, or eating surfaces.

As AlexRenew uses Biological Nutrient Removal (BNR) in the production of the reclaimed water, a Nutrient Management Plan is not required for the non-bulk irrigation end users.

5.3 WATER BALANCE

Per 9VAC25-740-100, the RWM Plan must contain a water balance that accounts for the volumes of reclaimed water that will be generated, stored, reused, and discharged. This water balance should include annual and seasonal reclaimed water demand for each reuse category.

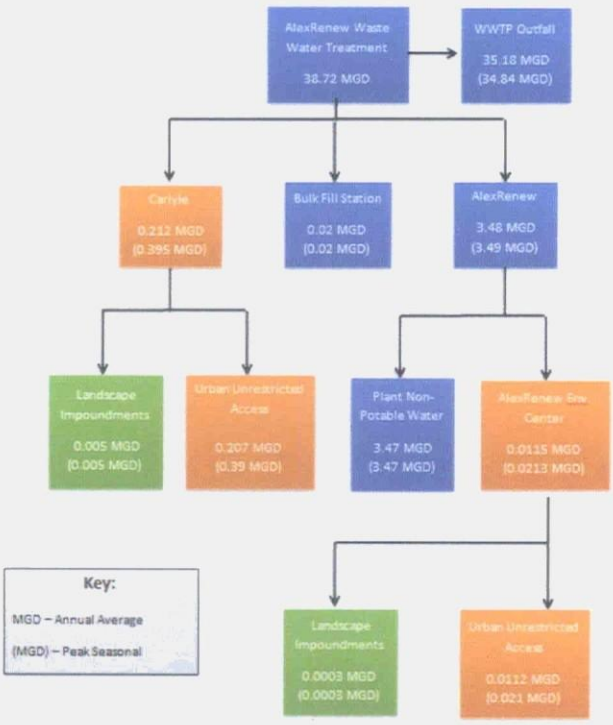

Figure 7: Water Balance including Annual and Seasonal Demand

There will be no discharge point from the reclaimed water system as the supply from AlexRenew's treatment facility will be controlled to equal the usage demand. The remaining plant flow will continue to be discharged to the VPDES permitted outfall. Any system flushing or return flow from the mechanical process will be routed back into the sanitary sewer collection system to be returned to AlexRenew.

It is important to note that while AlexRenew intends to offset a portion of its Waste Load Allocation (WLA) through the use of the reclaimed water system, AlexRenew is currently capable of meeting its WLA without a reclaimed water system. The reclaimed water system will not have a significant impact on the WLA until additional end users are accepted.

6. RECLAIMED WATER PROGRAM IMPLEMENTATION

6.1 SYSTEM IDENTIFICATION AND SIGNAGE

Distribution system identification and signage will be in compliance with the requirements of 9VAC25-740-110 and 9VAC25-740-160. Reclaimed water piping and appurtenances will be easily identifiable, including color-coding purple (Pantone 522) equipment to inform both the public and employees that the source of water is reclaimed water and therefore not intended for potable uses. Piping used to distribute reclaimed water will be painted purple and display a caution statement (i.e., "CAUTION RECLAIMED WATER - DO NOT DRINK") on opposite sides, repeated for the length of the pipe.

All aboveground piping will be labeled with the caution statement; mechanical appurtenances will be identified with "RECLAIMED WATER" to identify them from those of the potable water system. This includes, but is not limited to, valves boxes, valve covers, and hydrants (if applicable). Aboveground hand-operated connections (hose bibs, spigots) will differ materially from those used for potable water and must be easily distinguished from those of potable water (painted purple, specialized tools needed, etc.).

The end user will post advisory signs within and at the boundaries of the reuse area. The signs will state the nature of the reuse; display the required caution statement; display the international symbol for non-potable water; and be visible from 50 feet away.

6.2 CROSS CONNECTION AND BACKFLOW PREVENTION PROGRAM

The Virginia Water Reclamation and Reuse Regulations require that reclaimed water providers implement a cross connection and backflow prevention program. A cross-connection, as defined in the Commonwealth of Virginia Department of Health (VDH), Waterworks Regulations (12 VAC 5-590), is "any connection or structural arrangement, direct or indirect, to the waterworks whereby backflow can occur". Backflow is defined as "the undesirable reversal of flow of water or other liquids, mixtures, or substances into the distribution piping of a waterworks from any source or sources other than its intended source." Consequently, either cross-connections or the chance of backflow must be eliminated to prevent degrading the high quality of water that waterworks owners strive to maintain.

In compliance with the requirements of the regulation, AlexRenew is developing a cross connection and backflow prevention program to protect the public water supply from potential contamination due to backflow of reclaimed water into the public water supply system. In addition, the program is being developed to establish guidelines for continuous cross-connection control. Failure, refusal or the inability on the part of an end user to comply with this program shall constitute grounds for refusing or discontinuing service.

This program will:

- Evaluate the potential for cross connections of the reclaimed water distribution system to the local potable water system from industrial end users
- Evaluate the public health risks associated with possible backflow from industrial end users
- Describe inspections to be performed both at the time of connection and periodically thereafter to prevent potable water cross connections and backflow from industrial end users
- Insure the proper implementation of cross-connection and backflow prevention design criteria specified in the reuse regulations.

6.2.1 Responsibilities

The implementation of a program for the effective control of cross-connections and backflow prevention requires the full cooperation of all concerned, including AlexRenew, state and local agencies, water utilities, and end users.

AlexRenew

AlexRenew's responsibility begins with the treatment facility and reclaimed water production and extends through the public distribution system, including the service line and ends at the point of delivery to the customer. AlexRenew will require that an approved backflow prevention device be installed for all end users. AlexRenew shall assure that proper records are maintained on all backflow prevention device installations and shall initiate appropriate actions to prohibit or discontinue service to any end user, whose plumbing is susceptible to cross-connections, unless adequate protection against backflow is provided.

AlexRenew will require the end user, at their expense, to properly install an approved backflow prevention assembly at each service connection, to be tested annually or more often in those instances where successive inspections indicate repeated failure, and to properly repair and maintain such assembly or assemblies.

AlexRenew will coordinate with the City of Alexandria on plan reviews and will participate in the permit review process for cross-connections.

City of Alexandria

The City of Alexandria is responsible for assuring compliance with all plumbing codes pertaining to cross-connections including the installation of potable water piping within the reclaimed water easements during the development approval process.

Licensed Certified Backflow Prevention Assembly Tester

Licensed Backflow Prevention Assembly Testers (hereinafter Licensed Testers) will be responsible for the test, repair, overhaul, and maintenance of backflow prevention assemblies. Licensed Testers will be responsible for making competent inspections and repairing or overhauling backflow prevention assemblies and making reports of such repair to the end user. Licensed Testers shall include in their reports a list of materials or replacement parts used, and they shall assure that parts recommended by the manufacturer of the assembly being repaired are used in the repair of or replacement of parts in a backflow prevention device. This shall occur annually.

AlexRenew will ensure that Licensed Testers are engaged for initial service and annual inspections.

End User

End users have the primary responsibility for preventing contaminants from entering their potable water system. The end user's responsibility starts at the point of delivery from the public reclaimed water system and includes the end user's complete (i.e., potable and non-potable) internal water system. The end user shall, at their own expense, install, operate, test, and maintain approved backflow prevention assemblies. Following any repair or overhaul of an assembly, the end user shall have it tested by a Licensed Tester to ensure that it is in proper operating condition. Re-piping and relocation of an assembly shall be followed by retesting. Tests, maintenance, and repair of backflow prevention assemblies shall be made by a licensed backflow prevention assembly tester. The end user shall maintain accurate records of tests and

repairs to backflow prevention assemblies and provide AlexRenew with copies of such records within 30 days.

6.2.2 Types of Protection

A backflow preventer is defined as a device or means designed to prevent backflow or backsiphonage. The following types of devices types are listed in descending order of degree of protection offered:

- Air Gap Separation (AGS): A physical separation sufficient to prevent backflow between the free-flowing discharge end of the potable water system and any other system. Physically defined as a distance equal to twice the diameter of the supply side pipe diameter but never less than one (1) inch.
- Reduced Pressure Principle Zone Assembly (RPZ): An assembly consisting of two (2) independently operating approved check valves with an automatically operating differential relief valve located between the two (2) check valves, tightly closing shut-off valves on each side of the check valves plus properly located test cocks for the testing of the check valves and the relief valve.
- Double Check Assembly (DCA): An assembly of two (2) independently operating spring loaded check valves with tightly closing shut off valves on each side of the check valves, plus properly located test cocks for the testing of each check valve.
- Anti-Siphon Pressure Type Vacuum Breaker (VB-P): A device containing one or two independently operated spring loaded check valves and an independently operated spring loaded air inlet valve located on the discharge side of the check or checks. Device includes tightly closing shut-off valves on each side of the check valves and properly located test cocks for the testing of the check valve(s).
- Atmospheric Vacuum Breaker (VB-A): A device which prevents backsiphonage by creating an atmospheric vent when there is either a negative pressure or sub-atmospheric pressure in a water system.

6.2.3 Premises Requiring Backflow Prevention and Types of Protection Required

For the purpose of identifying industrial end users, this program will utilize the guidelines set forth in the VDH Waterworks Regulations, which require the installation of backflow prevention devices on each service line to a consumer's water system serving the types of facilities identified in Table 5.

Table 5: Recommended Protection for Cross Connection Hazards by Type of Facility

Facility	Hazard Found	Type of Protection
Hospitals, mortuaries, clinics, veterinary clinics, nursing homes, medical buildings	Bedpan, washers, flush valve toilets, auto claves, specimen tanks, aspirators, autopsy and mortuary equipment, e.g.	Not approved for Reclaimed Water
Laboratories	Autoclaves, specimen tanks, lab equipment, chemical, Bacteriological vessels, e.g.	Air gap separation or RPZ backflow device on the service connection

Sewage treatment plants, sewage and storm water pumping stations	Sewage pumps, sewage sump ejectors, laboratories, chemical storage, e.g.	Air gap separation or RPZ backflow device on the service connection
Food, beverage processing plants	Cookers, autoclaves, tanks, fill lines, steam connected facilities, chemicals, cleaning equipment, e.g.	Not approved for Reclaimed Water
Fire service systems	Sprinkler systems, foam systems, tanks, auxiliary water, anti-freeze, chemicals, pumps, pumper connections, e.g.	An air gap separation or RPZ backflow device on lines that are chemically treated. Double check backflow device on wet type sprinkler systems
Car Washes	Soap, wax aspirating equipment, reclaimed water lines, fill and feed lines, e.g.	An air gap separation or RPZ backflow device on the service connection
Lawn Sprinkler Systems	Submerged outlets, chemicals, pumps, stagnant or polluted ground water, e.g.	An RPZ device on lines that are connected with chemicals.
Schools, Colleges	Biological labs, flush valve toilets, specimen tanks, reservoirs, cooling towers, autopsy and morgue equipment, e.g.	Air gap separation or RPZ backflow device on the service connection.***
High Rise Buildings (4 or more stories)	Multiple services, change of occupancy, flush valve toilets, pumps, cooling towers, steam boilers, e.g.	An air gap separation or RPZ backflow device on the service connection.
Multi-use commercial, office or warehouse facilities	Multiple services, change of occupancy, internal looping of lines, industrial fluid lines, e.g.	An air gap separation or RPZ backflow device on the service connection.

6.2.4 Periodic Testing and Inspection

Reduced pressure principle backflow devices will be tested and inspected at least annually.

Testing will be performed by a Licensed Certified Tester at the end user's expense.

Any backflow prevention device that fails during a periodic test will be repaired or replaced. When repairs are necessary, upon completion of the repair, the device will be re-tested at end user's expense to insure correct operation. High hazard situations will not be allowed to continue unprotected if the backflow prevention device fails the test and cannot be repaired immediately. In other situations, a compliance date of not more than thirty (30) days after the test date will be established. The owner is responsible for spare parts, repair tools, or a replacement device. Parallel installation of two (2) devices is an effective means of the end user ensuring that uninterrupted water service during testing or repair of devices and is strongly recommended when the end user desires such continuity.

Backflow prevention devices will be tested more frequently than specified above, in cases where there is a history of test failures and AlexRenew determines that due to the potential for hazard, additional testing is warranted. The cost of the additional tests will be borne by the end user.

6.2.5 Records

AlexRenew shall maintain records of monthly analytical results, any operational problems, alarm failures, unit process or equipment breakdowns, diversions of reclaimed water to the VPDES

permitted outfall and any corrective actions taken. These records shall be maintained for a minimum of three (3) years.

Both AlexRenew and the end user will maintain records of end user specific monthly flow monitoring and backflow prevention testing for a minimum of five years.

By February 10th of the following year, AlexRenew shall submit an annual report to DEQ containing a yearly tabulation of the monthly flow distribution and any ongoing education and notification program activities (including copies of distributed materials).

6.3 END USER EDUCATION

As reclaimed water is a new product for the City of Alexandria, the development and implementation of an Education and Notification Program is paramount. Per 9VAC25-740, a provider of reclaimed water must have and implement an approved education and notification program where application or use of reclaimed water within the service area of the RWM plan requires Level 1 reclaimed water, will be in areas accessible to the public, or are likely to have human contact. AlexRenew will execute this program to inform both the end users and the public as to the nature, characteristics, benefits, uses, and prohibited uses of reclaimed water and to establish standards for the signage and the notification requirements of the end users.

The education component of the program will focus on informing the public of what reclaimed water is, where it comes from, and how it can and cannot be used. The primary means of distributing this information will be through brochures, our website (www.alexrenew.com), public outreach opportunities, and facility tours.

To educate the end user, AlexRenew will provide separate and specific training at the time of connection through instructional material, classroom and/or field training. This training will focus on regulations covering the nature and characteristics of reclaimed water, regulations for its specific end use, system regulations (cross-connection and backflow prevention) required monitoring and measuring, safe handling, and public notification.

The end user will be required to inform the public as to where the reclaimed water is applied. The means of distributing this information will be determined on a case-by-case basis, but will include, at a minimum, proper signage.

APPENDIX A: Example Service Agreement – Distribution System End User

AGREEMENT FOR THE DELIVERY AND USE OF RECLAIMED WATER

THIS AGREEMENT is entered into this_____ day of _____, 20__, between _____ a _____ (the "End User") and ALEXANDRIA SANITATION AUTHORITY d.b.a. "Alexandria Renew Enterprises", a Virginia body politic and corporate (the "Provider").

WITNESSETH:

WHEREAS, the Provider owns, maintains and operates water treatment and reclamation facilities that produce treated effluent that meets or exceeds the water reutilization standards of the Virginia Water Reclamation and Reuse Regulations (the "Reuse Regulations") codified at 9 VAC 25-740-10 et. seq. of the Virginia Administrative Code ("Reclaimed Water"); and

WHEREAS, the Provider is willing to sell and the End User is willing to purchase Reclaimed Water, pursuant to the terms of this Agreement for the Delivery and Use of Reclaimed Water (the "Agreement").

NOW, THEREFORE, in consideration of the foregoing and the mutual covenants contained herein, the Provider and End User do hereby agree as follows:

1. SALE OF RECLAIMED WATER

A. The Provider agrees to sell and deliver to the End User and the End User agrees to purchase and accept from the Provider **[insert specific quantity here in gallons per day]** of Reclaimed Water derived from the Provider's Reclaimed Water production, storage and distribution systems (the "Provider's System").

B. For the remainder of the calendar year following the date on which the Provider begins providing Reclaimed Water to the End User (the "Effective Date"), Reclaimed Water will cost $_____ per thousand gallons (the "Initial Rate") and thereafter at such rate as the Provider may establish and revise from time to time as applicable to all rate payers for Reclaimed Water.

C. On or before January 1 of each year, the Provider shall provide the End User with a copy of that portion of the Provider's adopted budget related to the Provider's System for the succeeding year and a computation of the total estimated cost per thousand gallons of Reclaimed Water expected to be sold to the End User during such year, which amount shall be used for billing purposes during the year.

D. Full payment of all invoices is due within 30 days of the date of issuance. If the End User fails to timely fully pay any of the charges as herein provided, a late payment charge equal to ten percent (10%) of the amount due shall be added to the amount billed and shall be

paid to the Provider by the End User. Failure to fully pay any charge within 60 days of the issuance of an invoice for such charge shall constitute an event of default.

E. The End User's payment to the Provider pursuant to the terms of this Agreement shall not create or constitute any ownership interest or title by the End User in or to any part of the Provider's System.

2. DELIVERY AND DISTRIBUTION OF RECLAIMED WATER

A. The Provider will deliver Reclaimed Water to the End User at the following location(s): **[Insert property address here]**_____ (the "Property"). See **Exhibit A**.

B. The Provider's System shall extend to the volumetric flow meter(s) (the "Point(s) of Delivery"). See **Exhibit A.** The Provider is responsible for operating and maintaining the Provider's System, including those components located on the Property up to and including the Point(s) of Delivery and including the volumetric flow meter(s). The End User shall own, operate, and maintain all those components of the Reclaimed Water delivery system after the flow meter(s) to the point(s) of use. (the "End User's System") (The Provider's System and the End User's System, collectively, shall be the Reclaimed Water System.)

(i) The End User shall provide a positive check-valve between the End User's System and any other non-potable irrigation water source(s). The End User shall be responsible for the cost, installation and complete operation of such check-valve. The End User will provide written notification to the Provider identifying any and all wells or surface water bodies connected to the End User's irrigation system.

(ii) The End User is responsible for constructing all pipes, connections, and appurtenances necessary to obtain Reclaimed Water from the Point of Delivery. Construction shall be in accordance with plans and specifications previously reviewed and approved by the Provider, final copies of which shall be submitted to the Provider for its records no more than thirty (30) calendar days subsequent to completion of construction.

C. All metering facilities installed at the Point(s) of Delivery are and shall remain the property of the Provider; said metering facilities being identified and described as follows:

Metering Location	Meter Size	Meter Number

D. The Provider will operate and maintain all Reclaimed Water metering facilities, including periodic testing thereof; and whenever it determines that replacement of any metering facility is required, it will install, operate and maintain such replacement/new metering facility as may be reasonably required in terms or then current waterworks industry standards for accuracy

so as to insure accurate measurement of the quantities of Reclaimed Water delivered by the Provider to the End User at each delivery location.

E. The aggregate of the quantities of Reclaimed Water delivered by the Provider to the End User as measured by each of the metering facilities that are installed shall be considered to be the total amount of Reclaimed Water delivered by the Provider to the End User during any specified period of time.

F. End User shall grant the Provider easements across and under the Property for the installation, operation, and maintenance of Provider's System pipes and appurtenances up to the Point of Delivery and for access to and inspection of the Reclaimed Water System (the "Easements"). The Deed of Easements is attached hereto as **Exhibit B**, and incorporated by reference and made a part of this Agreement. Upon full execution of the Deed of Easements, it shall be recorded in the land records of the City of Alexandria, Virginia.

G. End User shall provide the Provider with a sworn certificate of ownership and encumbrances regarding the Property. End User is responsible for obtaining and presenting to the Provider, the consent of all owners and mortgagees and any other person with a record interest in the Property [prior to the expiration date of this Agreement and the Easements] as a precondition to receipt of Reclaimed Water Services.

3. TERM OF THE AGREEMENT

A. This Agreement shall be effective upon later of the date first written above or the Effective date defined as the date the End User begins receiving Reclaimed Water from the Provider.

4. USE OF RECLAIMED WATER

A. End User shall use the Reclaimed Water for the following non-potable reuse purposes categorized in the Virginia Reuse Regulations (9 VAC 25-740-90) and in a manner consistent with all federal, state, and local regulations: **[Reclaimed water intended use to be inserted here]**.

B. Not less than one hundred twenty calendar (120) days prior to the anticipated date of initiating additional reuses not identified in the Agreement, End User shall provide a written request for approval to the Provider. The Provider shall review these proposed additional uses and may disapprove any proposed use. End User shall not initiate proposed additional water reuses until an amended copy of this Agreement is received from the Provider which documents the additional uses.

C. If End User proposes to use Reclaimed Water for other reuses including: agriculture, sports facility irrigation, or water features/aesthetic uses, then the following conditions apply:

(i) Treatment requirements more stringent than those required in the Virginia Reuse Regulations shall be agreed upon by the Provider and End User for other uses not

identified elsewhere in this Agreement. Any additional Reclaimed Water quality limits and treatment requirements for other specified uses will be identified in **Exhibit C**.

(ii) Color and odor limits may be agreed upon by the Provider and End User for other specified uses not identified elsewhere in this Agreement. Any additional color and odor limits for other uses will be identified in **Exhibit C**.

D. The Provider retains the right to terminate Reclaimed Water service immediately terminate and without prior written notice upon its determination that the End User has implemented unapproved uses of Reclaimed Water that may present a public health hazard, or are in violation of federal, state, or local regulations.

5. QUALITY OF RECLAIMED WATER SUPPLY

A. The Provider shall produce and supply Reclaimed Water of a quality that meets the standards of Reuse Regulations applicable for the End User's approved proposed uses outlined in Section 4A and any amendments thereto.

B. The Provider makes no other warranty, and specifically makes no implied warranty, of merchantability or of fitness of the Reclaimed Water for any particular reuse or purpose. Specifically, the Provider makes no representation concerning productivity of properties irrigated with Reclaimed Water, or potential changes to the land, crops, or vegetation. Further, any plans, specifications, water quality analysis, or reclaimed wastewater sampling will serve to merely indicate the general quality of Reclaimed Water that will be delivered to the End User. Such plans, specifications, water quality analyses or treated water samples create no warranty that the Reclaimed Water delivered by the Provider will conform to these samples.

C. In the event of Reclaimed Water quality deterioration, the Provider will inform the End User as soon as practicable after the Provider identifies such deterioration and will discontinue delivery of Reclaimed Water until the quality is restored to level required by the Reuse Regulations.

6. SERVICE DISRUPTION AND NOTIFICATION

A. The Provider shall provide the End User forty-eight (48) hours advanced notification for any planned service disruption.

B. The End User shall provide the Provider 48 hours advanced notification of any planned service disruption.

C. The End User shall notify the Provider of any unplanned service disruption within 2 hours of its occurrence.

D. If circumstances beyond the Provider's control prevent the full or partial delivery of Reclaimed Water as provided herein, the Provider shall promptly notify the End User by telephone and shall follow up with a letter stating the reason for the interruption of service and the anticipated duration.

E. The End User may reduce the quantity of Reclaimed Water used to match its reduced needs or to accommodate such unforeseen circumstances provided that, if the End User's reduced needs will extend for a period of twenty (20) days or more, the End User shall provide a written notice to the Provider of its reduced needs at least seven (7) calendar days prior to initiating the reduction.

F. The End User may draw additional Reclaimed Water, subject to availability of the Provider's Reclaimed Water supplies, to the maximum amount specified in Section 1.A. The Provider shall furnish only such Reclaimed Water as its determines in its sole discretion that the Reclaimed Water system can safely reclaim, transmit or delivery. The Provider assumes no responsibility or obligations with respect to water pressure or continuous feed of water except herein as stated.

7. CROSS-CONNECTION AND BACKFLOW PREVENTION

A. Direct cross-connections between the End User's System and any potable water supply system are not permitted.

B. The End User's System shall be in compliance with the cross-connection control and backflow prevention requirements of the Virginia Waterworks Regulations (12 VAC 5-590-580 et seq.), the Uniform Statewide Building Code, the Provider's Cross Connection/Backflow Prevention Program, and local building and plumbing codes.

C. End User may utilize potable water as a supplementary reuse source, provided there are no announced legal restrictions on such use, and there is an air gap separation of at least eight (8) inches, or twice the pipe diameter, whichever is greater, between the potable water and the Reclaimed Water or a reduced pressure principle backflow prevention device installed at the potable service connection to the reuse.

D. End User shall bear the cost of all backflow prevention devices in the End User's System. The Provider takes no responsibility for the operation and maintenance of the backflow prevention device(s).

8. DELIVERY SYSTEM DESIGN CRITERIA

The design and construction of the End User's System shall comply with the Reuse Regulations and the Sewage Collection and Treatment Regulations ("SCAT Regulations") of the Virginia Administrative Code.

9. CONSTRUCTION, OPERATION AND MAINTENANCE

A. End User will take all reasonable precautions, including signs and labeling, to clearly identify Reclaimed Water systems to prevent inadvertent human consumption.

B. The End User shall prepare an operations and maintenance manual for its System, which shall include, at a minimum, the following:

(i) A description of all components of the End User's System and step-by-step instructions for operation of specific mechanical components.

(ii) Routine maintenance and schedules of maintenance for all components of the End User's System.

(iii) Procedures to handle and dispose of any wastes or wastewater generated by maintenance of the delivery system in a manner protective of the environment.

C. The End User shall grant access to the Provider to perform routine and unplanned inspections of the End User's System, including required inspections for the cross-connection and backflow prevention system program as specified in 9 VAC 25-740-100.C.1.g. of the Reuse Regulations, as amended. The Provider shall have the ability to take notes, make sketches, and take photographs as necessary to document the condition of the Reclaimed Water system during inspection. Records of inspections shall be kept on file at the Provider.

D. End User shall contact the Provider immediately if its System is unable to accept Reclaimed Water.

E. The End User shall ensure that all necessary personnel are trained and familiar with the proper operation and maintenance of the End User's System.

F. The End User shall comply with all applicable operations and regulatory requirements as required by the Virginia Reuse Regulations, Section 9 VAC 25-740-160, or SCAT regulations and/or any local, state, or federal regulations in the construction, operations, and maintenance of the End User's System.

10. ADVISORY SIGNS

Signage shall be posted, as required by Section 9 VAC 25-740-160 of the Virginia Reuse Regulations, to ensure proper use of Reclaimed Water and to protect the health and safety of the general public. Signage shall be kept in appropriate condition so that the signs are legible and free of debris, vandalism, etc. The Provider may require the End User to post additional signage or replace existing signage if deemed necessary.

11. STORAGE

If required by Section 9 VAC 25-740-110 of the Virginia Reuse Regulations, the End User is required to own, operate, and maintain the End User's Reclaimed Water storage facilities.

12. RECORD KEEPING

The End User shall maintain and submit adequate records in accordance with 9 VAC 740-190 of the Reuse Regulations. Failure to submit and maintain required records could result in termination of service by the Provider.

13. IRRIGATION

A. If End User is providing bulk irrigation supply, the Provider may from time to time require rate controls and supply schedules to maintain adequate supply and pressures during periods of peak demands.

14. EARLY TERMINATION OR ASSIGNMENT

A. The Provider retains the right to terminate this Agreement at any time, including for any violations of this Agreement or of federal, state, or local regulations pertaining to the approved use and management of Reclaimed Water. The Provider will provide written notification of service termination to the End User thirty (30) days prior to termination of this Agreement.

B. This Agreement may not be assigned by the End User without the prior written consent of the Provider.

15. EXCUSE FROM PERFORMANCE BY GOVERNMENTAL ACTS

If for any reason during the term of this Agreement, local, state, or federal governments or agencies fail to issue necessary permits, fail to grant necessary approvals, or shall require any change in the operation of the treatment, transmission and distribution systems for Reclaimed Water or the application and use of Reclaimed Water provided by the Provider, then to the extent that such requirements shall affect the ability of any party to perform any of the terms of this Agreement, the affected party shall be excused from the performance thereof and a new Agreement shall be negotiated by the parties in conformity with such permits, approvals, or requirements.

16. TRANSFER OR MODIFICATION OF END USER'S COMMITMENT

End User's right to alienate or encumber the land described in **Exhibit B** shall not be restricted by this Agreement, except that End User shall give the Provider written notice of any proposed sale or transfer at least thirty (30) days prior to the sale or transfer.

17. DEFAULT

The following events shall constitute events of default under this Agreement:

A. Except as provided in Section 1F, if End User fails to keep, perform, or abide by any other term, condition, or covenant of this Agreement to be performed or observed. and does not cure such default within thirty (30) days after written notice thereof, or, if such default cannot be cured in such period, does not within thirty (30) days commence with diligence and dispatch such act or acts as shall be necessary to cure the default and shall not cure such default within a reasonable time; or

B. If any default shall occur under the terms of any agreement between the parties for potable water service or sanitary sewer service.

18. REMEDIES FOR DEFAULT

A. In the event of a default, at any time thereafter the non-defaulting party may terminate this Agreement by giving at least ten (10) days prior written notice (the "Notice of Termination") to the defaulting party and this Agreement shall terminate after the date of such notice.

B. Additionally, the Provider may, without terminating this Agreement, suspend Reclaimed Water service to End User upon ten (10) days written notice. Such suspension may continue for the period specified in the notice or until such time as the End User has corrected any breach of this Agreement to the satisfaction of the Provider. At the end of the period of suspended service, if the End User has not corrected the breach, the Provider may terminate this Agreement upon ten (10) days written notice to End User.

C. The non-defaulting party also has rights and remedies that may exist under law. All rights and remedies may be exercised successively or concurrently.

D. The sole and exclusive jurisdiction for any litigation arising from or relation to this Agreement shall be in the City of Alexandria, Commonwealth of Virginia.

19. ACCESS

The Provider shall have the right, at all reasonable times, to enter upon the Property to review and inspect the End User's System and/or the Provider's System Reclaimed Water facilities and operations with respect to the conditions agreed upon herein.

20. DISCLAIMER OF THIRD PARTY BENEFICIARIES

This Agreement is solely for the benefit of the parties hereto and no right or cause of action shall accrue to, upon or by reason hereto or for the benefit of any third party not a party hereto.

21. SEVERABILITY

If any part of this Agreement is found invalid or unenforceable by any court, such invalidity or unenforceability shall not affect the other parts of this Agreement if the rights and obligations of the parties contained therein are not materially prejudiced and if the intentions of the parties can continue to be effective. To that end, this Agreement is declared to be severable.

22. BINDING UPON SUCCESSORS

This Agreement shall be binding upon and shall inure to the benefit of the successors or assigns of the parties hereto. The terms and obligations of this Agreement shall run with the land referenced in **Exhibit B** attached hereto.

23. APPLICABLE LAW

This Agreement and the provisions contained herein shall be construed, controlled, and interpreted according to the laws of the Commonwealth of Virginia.

24. NOTICES

Unless otherwise specified in this Agreement, all notices or requests shall be in writing and shall be given by hand delivery or certified mail, return receipt requested, postage prepaid, addressed as follows:

If to the Provider:	With copies to:
Alexandria Renew Enterprises Attn: Karen Pallansch, CEO 1500 Eisenhower Avenue Alexandria, VA 22314 (703) 549-3381	McGuire Woods Attn: Jonathan Rak 1750 Tysons Boulevard, Suite 1800 McLean, VA 22102 (703) 712-5000

or to such other persons and places as the parties may specify by notice. The effective date of any notice or request shall be the date of receipt if delivered by hand, or the postmarked date thereof.

If to the End User:	With a copy to:
[Place name, address, and phone number here]	**[Place name, address, and phone number here]**

25. ENTIRE AGREEMENT

This Agreement constitutes the entire agreement between the parties. End User agrees to abide by the provisions of the Alexandria Renew Enterprises Water Rules, Rates and Regulations and any policies and procedures which may address Reclaimed Water. Except as may be provided by Alexandria Renew Enterprises Water Rules, Rates and Regulations, policies or procedures, modifications to and waivers of the provisions herein shall not be binding unless made in writing and signed by the parties hereto.

IN WITNESS WHEREOF, the parties hereto have set their hands and seals on the date first above written.

ATTEST:

_____

_____

END USER,

_____

ATTEST:

_____

_____

ALEXANDRIA RENEW ENTERPRISES,

By: _____
Chief Executive Officer

EXHIBIT A

LOCATION OF CUSTOMER'S PROPERTY AND POINT(S) OF DELIVERY

EXHIBIT B

EASEMENT SKETCH AND LEGAL DESCRIPTION

EXHIBIT C
[This Exhibit shall be completed as it pertains to each Customer]

RECLAIMED WATER - ADDITIONAL REQUIREMENTS

1. The Provider agrees to provide Reclaimed Water that meets the flowing additional water quality criteria as measured at the regulatory point of compliance for the Alexandria Renew Enterprises Reclaimed Water System:

PARAMETER	MONTHLY AVG LIMIT	SAMPLE TYPE	FREQUENCY OF MEASUREMENT
E. Coli	≤11 colonies/100mL	Grab	1/day
pH	6 to 9 S.U.	Grab	1/day
$CBOD_5$	≤8 mg/L	Composite	1/day
Turbidity	≤2 NTU	Online	Continuous

Disclaimer

This is an updated PDF document that allows you to type your information directly into the form and to save the completed form. This form is the most updated form currently available.

Note: This form can be viewed and saved only using Adobe Acrobat Reader version 7.0 or higher, or if you have the full Adobe Professional version.

Instructions:

1. Type in your information
2. Save file (if desired)
3. Print the completed form
4. Sign and date the printed copy
5. Mail it to the directed contact.

FACILITY NAME AND PERMIT NUMBER:
Alexandria Renew Enterprises VA0025160

Form Approved 1/14/99
OMB Number 2040-0086

FORM **2A** NPDES

NPDES FORM 2A APPLICATION OVERVIEW

APPLICATION OVERVIEW

Form 2A has been developed in a modular format and consists of a "Basic Application Information" packet and a "Supplemental Application Information" packet. The Basic Application Information packet is divided into two parts. All applicants must complete Parts A and C. Applicants with a design flow greater than or equal to 0.1 mgd must also complete Part B. Some applicants must also complete the Supplemental Application Information packet. The following items explain which parts of Form 2A you must complete.

VA DEQ NORTHERN REGIONAL OFFICE OCT 3 1 2013 MANASSAS, VA

BASIC APPLICATION INFORMATION:

A. **Basic Application Information for all Applicants.** All applicants must complete questions A.1 through A.8. A treatment works that discharges effluent to surface waters of the United States must also answer questions A.9 through A.12.

B. **Additional Application Information for Applicants with a Design Flow ≥ 0.1 mgd.** All treatment works that have design flows greater than or equal to 0.1 million gallons per day must complete questions B.1 through B.6.

C. **Certification.** All applicants must complete Part C (Certification).

SUPPLEMENTAL APPLICATION INFORMATION:

D. **Expanded Effluent Testing Data.** A treatment works that discharges effluent to surface waters of the United States and meets one or more of the following criteria must complete Part D (Expanded Effluent Testing Data):

1. Has a design flow rate greater than or equal to 1 mgd,
2. Is required to have a pretreatment program (or has one in place), or
3. Is otherwise required by the permitting authority to provide the information.

E. **Toxicity Testing Data.** A treatment works that meets one or more of the following criteria must complete Part E (Toxicity Testing Data):

1. Has a design flow rate greater than or equal to 1 mgd,
2. Is required to have a pretreatment program (or has one in place), or
3. Is otherwise required by the permitting authority to submit results of toxicity testing.

F. **Industrial User Discharges and RCRA/CERCLA Wastes.** A treatment works that accepts process wastewater from any significant industrial users (SIUs) or receives RCRA or CERCLA wastes must complete Part F (Industrial User Discharges and RCRA/CERCLA Wastes). SIUs are defined as:

1. All industrial users subject to Categorical Pretreatment Standards under 40 Code of Federal Regulations (CFR) 403.6 and 40 CFR Chapter I, Subchapter N (see instructions); and
2. Any other industrial user that:
   a. Discharges an average of 25,000 gallons per day or more of process wastewater to the treatment works (with certain exclusions); or
   b. Contributes a process wastestream that makes up 5 percent or more of the average dry weather hydraulic or organic capacity of the treatment plant; or
   c. Is designated as an SIU by the control authority.

G. **Combined Sewer Systems.** A treatment works that has a combined sewer system must complete Part G (Combined Sewer Systems).

ALL APPLICANTS MUST COMPLETE PART C (CERTIFICATION)

EPA Form 3510-2A (Rev. 1-99). Replaces EPA forms 7550-6 & 7550-22.

FACILITY NAME AND PERMIT NUMBER:
Alexandria Renew Enterprises VA0025160

Form Approved 1/14/99
OMB Number 2040-0086

BASIC APPLICATION INFORMATION

PART A. BASIC APPLICATION INFORMATION FOR ALL APPLICANTS:

All treatment works must complete questions A.1 through A.8 of this Basic Application Information packet.

A.1. Facility Information.

Facility name: Alexandria Renew Enterprises Water Resources Recovery Facility

Mailing Address: 1500 Eisenhower Avenue, Alexandria, Virginia 22314

Contact person: Adrienne Fancher

Title: Chief Operating Officer

Telephone number: (703) 549-3381

Facility Address (not P.O. Box): 1500 Eisenhower Avenue, Alexandria, Virginia 22314

A.2. Applicant Information. If the applicant is different from the above, provide the following:

Applicant name: City of Alexandria, Virginia, Sanitation Authority, d/b/a Alexandria Renew Enterprises

Mailing Address: Same as above A.1.

Contact person: Same as above A.1.

Title: Same as above A.1.

Telephone number: (703) 549-3381

Is the applicant the owner or operator (or both) of the treatment works?

✓ owner ✓ operator

Indicate whether correspondence regarding this permit should be directed to the facility or the applicant.

✓ facility ____ applicant

A.3. Existing Environmental Permits. Provide the permit number of any existing environmental permits that have been issued to the treatment works (include state-issued permits).

NPDES	VA0025160, VAN010059, VAR051503	PSD	N/A
UIC	N/A	Other	Air Registration: 70701
RCRA	N/A	Other	City of Hopewell, Virginia, Indirect Wastewater Discharge Permit: 6300

A.4. Collection System Information. Provide information on municipalities and areas served by the facility. Provide the name and population of each entity and, if known, provide information on the type of collection system (combined vs. separate) and its ownership (municipal, private, etc.).

Name	Population Served	Type of Collection System	Ownership
Fairfax County	169,000	Separate	Municipal
City of Alexandria	146,000	Separate and Combined	Municipal

Total population served 315,000

A.5. Indian Country.

a. Is the treatment works located in Indian Country?

____ Yes ✓ No

b. Does the treatment works discharge to a receiving water that is either in Indian Country or that is upstream from (and eventually flows through) Indian Country?

____ Yes ✓ No

A.6. Flow. Indicate the design flow rate of the treatment plant (i.e., the wastewater flow rate that the plant was built to handle). Also provide the average daily flow rate and maximum daily flow rate for each of the last three years. Each year's data must be based on a 12-month time period with the 12th month of "this year" occurring no more than three months prior to this application submittal.

a. Design flow rate 54.0 mgd

See Additional Information

	Two Years Ago	Last Year	This Year	
b. Annual average daily flow rate	33.3	34.8	35.6	mgd
c. Maximum daily flow rate	75.7	104.5	79.7	mgd

A.7. Collection System. Indicate the type(s) of collection system(s) used by the treatment plant. Check all that apply. Also estimate the percent contribution (by miles) of each. See Additional Information

✓ Separate sanitary sewer	85 %
✓ Combined storm and sanitary sewer	15 %

A.8. Discharges and Other Disposal Methods.

a. Does the treatment works discharge effluent to waters of the U.S.? ✓ Yes ____ No

If yes, list how many of each of the following types of discharge points the treatment works uses:

i. Discharges of treated effluent	2
ii. Discharges of untreated or partially treated effluent	0
iii. Combined sewer overflow points	0
iv. Constructed emergency overflows (prior to the headworks)	2
v. Other ____	0

b. Does the treatment works discharge effluent to basins, ponds, or other surface impoundments that do not have outlets for discharge to waters of the U.S.? ____ Yes ✓ No

If yes, provide the following for each surface impoundment:

Location: N/A

Annual average daily volume discharged to surface impoundment(s) N/A mgd

Is discharge ____ continuous or ____ intermittent?

c. Does the treatment works land-apply treated wastewater? ____ Yes ✓ No

If yes, provide the following for each land application site:

Location: N/A

Number of acres: N/A

Annual average daily volume applied to site: N/A Mgd

Is land application ____ continuous or ____ intermittent? N/A

d. Does the treatment works discharge or transport treated or untreated wastewater to another treatment works? ____ Yes ✓ No

If yes, describe the mean(s) by which the wastewater from the treatment works is discharged or transported to the other treatment works (e.g., tank truck, pipe).

N/A

If transport is by a party other than the applicant, provide:

Transporter name: N/A

Mailing Address: N/A

Contact person: N/A

Title: N/A

Telephone number:

For each treatment works that receives this discharge, provide the following:

Name: N/A

Mailing Address: N/A

Contact person: N/A

Title: N/A

Telephone number:

If known, provide the NPDES permit number of the treatment works that receives this discharge. N/A

Provide the average daily flow rate from the treatment works into the receiving facility. N/A mgd

e. Does the treatment works discharge or dispose of its wastewater in a manner not included in A.8.a through A.8.d above (e.g., underground percolation, well injection)? ____ Yes ✓ No

If yes, provide the following for each disposal method:

Description of method (including location and size of site(s) if applicable):

N/A

Annual daily volume disposed of by this method: N/A

Is disposal through this method ____ continuous or ____ intermittent? N/A

FACILITY NAME AND PERMIT NUMBER:
Alexandria Renew Enterprises VA0025160

Form Approved 1/14/99
OMB Number 2040-0086

WASTEWATER DISCHARGES:

If you answered "yes" to question A.8.a, complete questions A.9 through A.12 **once for each outfall** (including bypass points) through which effluent is discharged. Do not include information on combined sewer overflows in this section. **If you answered "no" to question A.8.a**, go to Part B, "Additional Application Information for Applicants with a Design Flow Greater than or Equal to 0.1 mgd."

A.9. Description of Outfall.

a. Outfall number 001

b. Location
Alexandria (City or town, if applicable) — 22314 (Zip Code)
N/A (County) — Virginia (State)
N 38 Degrees 47 Minutes 37 Seconds (Latitude) — W 77 Degrees 3 Minutes 26 Seconds (Longitude)

c. Distance from shore (if applicable) 0 ft.

d. Depth below surface (if applicable) N/A ft.

e. Average daily flow rate 34.6 mgd
See Additional Information

f. Does this outfall have either an intermittent or a periodic discharge? ____ Yes ✓ No (go to A.9.g.)

If yes, provide the following information:

Number of times per year discharge occurs: N/A

Average duration of each discharge: N/A

Average flow per discharge: N/A mgd

Months in which discharge occurs: N/A

g. Is outfall equipped with a diffuser? ____ Yes ____ No N/A

A.10. Description of Receiving Waters.

a. Name of receiving water Hunting Creek, then the Potomac River, then into the Chesapeake Bay.

b. Name of watershed (if known) Middle Potomac-Anacostia-Occoquan

United States Soil Conservation Service 14-digit watershed code (if known): 020700100302

c. Name of State Management/River Basin (if known): Potomac River

United States Geological Survey 8-digit hydrologic cataloging unit code (if known): 02070010

d. Critical low flow of receiving stream (if applicable):
acute Tidal cfs chronic Tidal cfs

e. Total hardness of receiving stream at critical low flow (if applicable): N/A mg/l of $CaCO_3$
See Additional Information

FACILITY NAME AND PERMIT NUMBER:
Alexandria Renew Enterprises VA0025160

Form Approved 1/14/99
OMB Number 2040-0086

A.11. Description of Treatment.

a. What levels of treatment are provided? Check all that apply.

✓ Primary ✓ Secondary
✓ Advanced ____ Other. Describe: Enhanced Nutrient Removal

b. Indicate the following removal rates (as applicable):

Design BOD_5 removal or Design $CBOD_5$ removal	97	%
Design SS removal	98	%
Design P removal	97	%
Design N removal	91	%
Other NH3-N	95	%

c. What type of disinfection is used for the effluent from this outfall? If disinfection varies by season, please describe.

Ultraviolet Disinfection

If disinfection is by chlorination, is dechlorination used for this outfall? ____ Yes ____ No N/A

d. Does the treatment plant have post aeration? ✓ Yes ____ No

A.12. Effluent Testing Information. All Applicants that discharge to waters of the US must provide effluent testing data for the following parameters. Provide the indicated effluent testing required by the permitting authority for each outfall through which effluent is discharged. Do not include information on combined sewer overflows in this section. All information reported must be based on data collected through analysis conducted using 40 CFR Part 136 methods. In addition, this data must comply with QA/QC requirements of 40 CFR Part 136 and other appropriate QA/QC requirements for standard methods for analytes not addressed by 40 CFR Part 136. At a minimum, effluent testing data must be based on at least three samples and must be no more than four and one-half years apart.

Outfall number: 001 (See Additional Information)

PARAMETER	MAXIMUM DAILY VALUE		AVERAGE DAILY VALUE		
	Value	Units	Value	Units	Number of Samples
pH (Minimum)	6.5	s.u.			
pH (Maximum)	7.4	s.u.			
Flow Rate	79.7	mgd	33.3	mgd	366
Temperature (Winter)	67	F.	63	F.	89
Temperature (Summer)	85	F.	79	F.	94

* For pH please report a minimum and a maximum daily value

POLLUTANT		MAXIMUM DAILY DISCHARGE		AVERAGE DAILY DISCHARGE			ANALYTICAL METHOD	ML / MDL
		Conc.	Units	Conc.	Units	Number of Samples		
CONVENTIONAL AND NONCONVENTIONAL COMPOUNDS.								
BIOCHEMICAL OXYGEN	BOD-5	N/A	N/A	N/A	N/A	N/A	N/A	N/A
DEMAND (Report one)	CBOD-5	4	mg/L	0	mg/L	366	SM 5210 B	2 mg/L
FECAL COLIFORM		127	#/100 ml	2.2	#/100 ml	366	Colilert-18	1/100 ml
TOTAL SUSPENDED SOLIDS (TSS)		2.1	mg/L	0.7	mg/L	366	SM 2540 D	1 mg/L

END OF PART A.
REFER TO THE APPLICATION OVERVIEW TO DETERMINE WHICH OTHER PARTS OF FORM 2A YOU MUST COMPLETE

FACILITY NAME AND PERMIT NUMBER:
Alexandria Renew Enterprises VA0025160

Form Approved 1/14/99
OMB Number 2040-0086

WASTEWATER DISCHARGES:

If you answered "yes" to question A.8.a, complete questions A.9 through A.12 **once for each outfall** (including bypass points) through which effluent is discharged. Do not include information on combined sewer overflows in this section. **If you answered "no" to question A.8.a**, go to Part B, "Additional Application Information for Applicants with a Design Flow Greater than or Equal to 0.1 mgd."

A.9. Description of Outfall.

a. Outfall number: 002

b. Location: Alexandria (City or town, if applicable); 22314 (Zip Code)
N/A (County); Virginia (State)
N 38 Degrees 47 Minutes 49 Seconds (Latitude); W 77 Degrees 3 Minutes 36 Seconds (Longitude)

c. Distance from shore (if applicable): 0 ft.

d. Depth below surface (if applicable): N/A ft.

e. Average daily flow rate: 0 mgd

f. Does this outfall have either an intermittent or a periodic discharge? ✓ Yes ____ No (go to A.9.g.)

If yes, provide the following information:

Number of times per year discharge occurs: 0 Times - Emergency Use Only

Average duration of each discharge: N/A

Average flow per discharge: N/A mgd

Months in which discharge occurs: N/A

g. Is outfall equipped with a diffuser? ____ Yes ✓ No

A.10. Description of Receiving Waters.

a. Name of receiving water: Hooff's Run, then Hunting Creek, then the Potomac River, then into the Chesapeake Bay.

b. Name of watershed (if known): Middle Potomac-Anacostia-Occoquan

United States Soil Conservation Service 14-digit watershed code (if known): 020700100302

c. Name of State Management/River Basin (if known): Potomac River

United States Geological Survey 8-digit hydrologic cataloging unit code (if known): 02070010

d. Critical low flow of receiving stream (if applicable):
acute Tidal cfs chronic Tidal cfs

e. Total hardness of receiving stream at critical low flow (if applicable): N/A mg/l of $CaCO_3$
See Additional Information

FACILITY NAME AND PERMIT NUMBER:
Alexandria Renew Enterprises VA0025160

Form Approved 1/14/99
OMB Number 2040-0086

A.11. Description of Treatment.

a. What levels of treatment are provided? Check all that apply.

✓ Primary ✓ Secondary
✓ Advanced _____ Other. Describe: Enhanced Nutrient Removal

b. Indicate the following removal rates (as applicable):

Design BOD_5 removal or Design $CBOD_5$ removal	97	%
Design SS removal	98	%
Design P removal	97	%
Design N removal	91	%
Other NH3-N	95	%

c. What type of disinfection is used for the effluent from this outfall? If disinfection varies by season, please describe.

Temporary Chlorination/Dechlorination would be used. No disinfection at this time.

If disinfection is by chlorination, is dechlorination used for this outfall? ✓ Yes _____ No

d. Does the treatment plant have post aeration? _____ Yes ✓ No

A.12. Effluent Testing Information. All Applicants that discharge to waters of the US must provide effluent testing data for the following parameters. Provide the indicated effluent testing required by the permitting authority for each outfall through which effluent is discharged. Do not include information on combined sewer overflows in this section. All information reported must be based on data collected through analysis conducted using 40 CFR Part 136 methods. In addition, this data must comply with QA/QC requirements of 40 CFR Part 136 and other appropriate QA/QC requirements for standard methods for analytes not addressed by 40 CFR Part 136. At a minimum, effluent testing data must be based on at least three samples and must be no more than four and one-half years apart.

Outfall number: 002 (See Additional Information)

PARAMETER	MAXIMUM DAILY VALUE		AVERAGE DAILY VALUE		
	Value	Units	Value	Units	Number of Samples
pH (Minimum)	N/A	s.u.			
pH (Maximum)	N/A	s.u.			
Flow Rate	N/A	N/A	N/A	N/A	N/A
Temperature (Winter)	N/A	N/A	N/A	N/A	N/A
Temperature (Summer)	N/A	N/A	N/A	N/A	N/A

* For pH please report a minimum and a maximum daily value

POLLUTANT		MAXIMUM DAILY DISCHARGE		AVERAGE DAILY DISCHARGE			ANALYTICAL METHOD	ML / MDL
		Conc.	Units	Conc.	Units	Number of Samples		
CONVENTIONAL AND NONCONVENTIONAL COMPOUNDS.								
BIOCHEMICAL OXYGEN	BOD-5	N/A	N/A	N/A	N/A	N/A	N/A	N/A
DEMAND (Report one)	CBOD-5	N/A	N/A	N/A	N/A	N/A	N/A	N/A
FECAL COLIFORM		N/A	N/A	N/A	N/A	N/A	N/A	N/A
TOTAL SUSPENDED SOLIDS (TSS)		N/A	N/A	N/A	N/A	N/A	N/A	N/A

END OF PART A.
REFER TO THE APPLICATION OVERVIEW TO DETERMINE WHICH OTHER PARTS OF FORM 2A YOU MUST COMPLETE

FACILITY NAME AND PERMIT NUMBER:
Alexandria Renew Enterprises VA0025160

Form Approved 1/14/99
OMB Number 2040-0086

WASTEWATER DISCHARGES:

If you answered "yes" to question A.8.a, complete questions A.9 through A.12 **once for each outfall** (including bypass points) through which effluent is discharged. Do not include information on combined sewer overflows in this section. **If you answered "no" to question A.8.a**, go to Part B, "Additional Application Information for Applicants with a Design Flow Greater than or Equal to 0.1 mgd."

A.9. Description of Outfall.

a. Outfall number 016

b. Location
Alexandria (City or town, if applicable) — 22314 (Zip Code)
N/A (County) — Virginia (State)
N 38 Degrees 47 Minutes 51 Seconds (Latitude) — W 77 Degrees 3 Minutes 40 Seconds (Longitude)

c. Distance from shore (if applicable) 2 ft.

d. Depth below surface (if applicable) N/A ft.

e. Average daily flow rate N/A mgd

f. Does this outfall have either an intermittent or a periodic discharge? ✓ Yes ____ No (go to A.9.g.)

If yes, provide the following information:

Number of times per year discharge occurs: (See Additional Information)

Average duration of each discharge: (See Additional Information)

Average flow per discharge: (See Additional Information) mgd

Months in which discharge occurs: (See Additional Information)

g. Is outfall equipped with a diffuser? ____ Yes ✓ No

A.10. Description of Receiving Waters.

a. Name of receiving water Hooff's Run, then Hunting Creek, then the Potomac River, then into the Chesapeake Bay.

b. Name of watershed (if known) Middle Potomac-Anacostia-Occoquan

United States Soil Conservation Service 14-digit watershed code (if known): 020700100302

c. Name of State Management/River Basin (if known): Potomac River

United States Geological Survey 8-digit hydrologic cataloging unit code (if known): 02070010

d. Critical low flow of receiving stream (if applicable):
acute Tidal cfs chronic Tidal cfs

e. Total hardness of receiving stream at critical low flow (if applicable): N/A mg/l of $CaCO_3$

FACILITY NAME AND PERMIT NUMBER:
Alexandria Renew Enterprises VA0025160

Form Approved 1/14/99
OMB Number 2040-0086

A.11. Description of Treatment.

a. What levels of treatment are provided? Check all that apply.

_____ Primary _____ Secondary

_____ Advanced ✓ Other. Describe: None - Constructed emergency overflow prior to plant

b. Indicate the following removal rates (as applicable):

Design BOD_5 removal or Design $CBOD_5$ removal N/A %

Design SS removal N/A %

Design P removal N/A %

Design N removal N/A %

Other NH3-N N/A %

c. What type of disinfection is used for the effluent from this outfall? If disinfection varies by season, please describe.

N/A

If disinfection is by chlorination, is dechlorination used for this outfall? _____ Yes _____ No **N/A**

d. Does the treatment plant have post aeration? _____ Yes _____ No **N/A**

A.12. Effluent Testing Information. All Applicants that discharge to waters of the US must provide effluent testing data for the following parameters. Provide the indicated effluent testing required by the permitting authority for each outfall through which effluent is discharged. Do not include information on combined sewer overflows in this section. All information reported must be based on data collected through analysis conducted using 40 CFR Part 136 methods. In addition, this data must comply with QA/QC requirements of 40 CFR Part 136 and other appropriate QA/QC requirements for standard methods for analytes not addressed by 40 CFR Part 136. At a minimum, effluent testing data must be based on at least three samples and must be no more than four and one-half years apart.

Outfall number: 016 (See Additional Information)

PARAMETER	MAXIMUM DAILY VALUE		AVERAGE DAILY VALUE		
	Value	Units	Value	Units	Number of Samples
pH (Minimum)	N/A	s.u.			
pH (Maximum)	N/A	s.u.			
Flow Rate	N/A	N/A	N/A	N/A	N/A
Temperature (Winter)	N/A	N/A	N/A	N/A	N/A
Temperature (Summer)	N/A	N/A	N/A	N/A	N/A

* For pH please report a minimum and a maximum daily value

POLLUTANT		MAXIMUM DAILY DISCHARGE		AVERAGE DAILY DISCHARGE			ANALYTICAL METHOD	ML / MDL
		Conc.	Units	Conc.	Units	Number of Samples		
CONVENTIONAL AND NONCONVENTIONAL COMPOUNDS.								
BIOCHEMICAL OXYGEN	BOD-5	N/A	N/A	N/A	N/A	N/A	N/A	N/A
DEMAND (Report one)	CBOD-5	N/A	N/A	N/A	N/A	N/A	N/A	N/A
FECAL COLIFORM		N/A	N/A	N/A	N/A	N/A	N/A	N/A
TOTAL SUSPENDED SOLIDS (TSS)		N/A	N/A	N/A	N/A	N/A	N/A	N/A

END OF PART A.
REFER TO THE APPLICATION OVERVIEW TO DETERMINE WHICH OTHER PARTS OF FORM 2A YOU MUST COMPLETE

FACILITY NAME AND PERMIT NUMBER:
Alexandria Renew Enterprises VA0025160

Form Approved 1/14/99
OMB Number 2040-0086

WASTEWATER DISCHARGES:

If you answered "yes" to question A.8.a, complete questions A.9 through A.12 **once for each outfall** (including bypass points) through which effluent is discharged. Do not include information on combined sewer overflows in this section. **If you answered "no" to question A.8.a**, go to Part B, "Additional Application Information for Applicants with a Design Flow Greater than or Equal to 0.1 mgd."

A.9. Description of Outfall.

a. Outfall number 017

b. Location
Alexandria (City or town, if applicable) — 22314 (Zip Code)
N/A (County) — Virginia (State)
N 38 Degrees 50 Minutes 28 Seconds (Latitude) — W 77 Degrees 3 Minutes 21 Seconds (Longitude)

c. Distance from shore (if applicable) 0 ft.

d. Depth below surface (if applicable) 0 ft.

e. Average daily flow rate N/A mgd

f. Does this outfall have either an intermittent or a periodic discharge? ✓ Yes ____ No (go to A.9.g.)

If yes, provide the following information:

Number of times per year discharge occurs: (See Additional Information)

Average duration of each discharge: (See Additional Information)

Average flow per discharge: (See Additional Information) mgd

Months in which discharge occurs: (See Additional Information)

g. Is outfall equipped with a diffuser? ____ Yes ✓ No

A.10. Description of Receiving Waters.

a. Name of receiving water Four Mile Run, then the Potomac River, then into the Chesapeake Bay

b. Name of watershed (if known) Middle Potomac-Anacostia-Occoquan

United States Soil Conservation Service 14-digit watershed code (if known): 020700100302

c. Name of State Management/River Basin (if known): Potomac River

United States Geological Survey 8-digit hydrologic cataloging unit code (if known): 02070010

d. Critical low flow of receiving stream (if applicable):
acute Unknown cfs chronic Unknown cfs

e. Total hardness of receiving stream at critical low flow (if applicable): N/A mg/l of $CaCO_3$

FACILITY NAME AND PERMIT NUMBER:
Alexandria Renew Enterprises VA0025160

Form Approved 1/14/99
OMB Number 2040-0086

A.11. Description of Treatment.

a. What levels of treatment are provided? Check all that apply.

_____ Primary _____ Secondary

_____ Advanced ✓ Other. Describe: (See Additional Information)

b. Indicate the following removal rates (as applicable):

Design BOD_5 removal or Design $CBOD_5$ removal N/A %

Design SS removal N/A %

Design P removal N/A %

Design N removal N/A %

Other NH3-N N/A %

c. What type of disinfection is used for the effluent from this outfall? If disinfection varies by season, please describe.

N/A

If disinfection is by chlorination, is dechlorination used for this outfall? _____ Yes _____ No N/A

d. Does the treatment plant have post aeration? _____ Yes _____ No N/A

A.12. Effluent Testing Information. All Applicants that discharge to waters of the US must provide effluent testing data for the following parameters. Provide the indicated effluent testing required by the permitting authority for each outfall through which effluent is discharged. Do not include information on combined sewer overflows in this section. All information reported must be based on data collected through analysis conducted using 40 CFR Part 136 methods. In addition, this data must comply with QA/QC requirements of 40 CFR Part 136 and other appropriate QA/QC requirements for standard methods for analytes not addressed by 40 CFR Part 136. At a minimum, effluent testing data must be based on at least three samples and must be no more than four and one-half years apart.

Outfall number: 017 (See Additional Information)

PARAMETER	MAXIMUM DAILY VALUE		AVERAGE DAILY VALUE		
	Value	Units	Value	Units	Number of Samples
pH (Minimum)	N/A	s.u.			
pH (Maximum)	N/A	s.u.			
Flow Rate	N/A	N/A	N/A	N/A	N/A
Temperature (Winter)	N/A	N/A	N/A	N/A	N/A
Temperature (Summer)	N/A	N/A	N/A	N/A	N/A

* For pH please report a minimum and a maximum daily value

POLLUTANT		MAXIMUM DAILY DISCHARGE		AVERAGE DAILY DISCHARGE			ANALYTICAL METHOD	ML / MDL
		Conc.	Units	Conc.	Units	Number of Samples		
CONVENTIONAL AND NONCONVENTIONAL COMPOUNDS.								
BIOCHEMICAL OXYGEN	BOD-5	N/A	N/A	N/A	N/A	N/A	N/A	N/A
DEMAND (Report one)	CBOD-5	N/A	N/A	N/A	N/A	N/A	N/A	N/A
FECAL COLIFORM		N/A	N/A	N/A	N/A	N/A	N/A	N/A
TOTAL SUSPENDED SOLIDS (TSS)		N/A	N/A	N/A	N/A	N/A	N/A	N/A

END OF PART A.
REFER TO THE APPLICATION OVERVIEW TO DETERMINE WHICH OTHER PARTS OF FORM 2A YOU MUST COMPLETE

Form Approved 1/14/99
OMB Number 2040-0086

BASIC APPLICATION INFORMATION

PART B. ADDITIONAL APPLICATION INFORMATION FOR APPLICANTS WITH A DESIGN FLOW GREATER THAN OR EQUAL TO 0.1 MGD (100,000 gallons per day).

All applicants with a design flow rate ≥ 0.1 mgd must answer questions B.1 through B.6. All others go to Part C (Certification).

B.1. Inflow and Infiltration. Estimate the average number of gallons per day that flow into the treatment works from inflow and/or infiltration.

3,000,000 gpd

Briefly explain any steps underway or planned to minimize inflow and infiltration.

City and County have existing collection system programs focusing on rehabilitation and reducing I/I.

B.2. Topographic Map. Attach to this application a topographic map of the area extending at least one mile beyond facility property boundaries. This map must show the outline of the facility and the following information. (You may submit more than one map if one map does not show the entire area.)

a. The area surrounding the treatment plant, including all unit processes.

b. The major pipes or other structures through which wastewater enters the treatment works and the pipes or other structures through which treated wastewater is discharged from the treatment plant. Include outfalls from bypass piping, if applicable.

c. Each well where wastewater from the treatment plant is injected underground.

d. Wells, springs, other surface water bodies, and drinking water wells that are: 1) within 1/4 mile of the property boundaries of the treatment works, and 2) listed in public record or otherwise known to the applicant.

e. Any areas where the sewage sludge produced by the treatment works is stored, treated, or disposed.

f. If the treatment works receives waste that is classified as hazardous under the Resource Conservation and Recovery Act (RCRA) by truck, rail, or special pipe, show on the map where that hazardous waste enters the treatment works and where it is treated, stored, and/or disposed.

B.3. Process Flow Diagram or Schematic. Provide a diagram showing the processes of the treatment plant, including all bypass piping and all backup power sources or redundancy in the system. Also provide a water balance showing all treatment units, including disinfection (e.g, chlorination and dechlorination). The water balance must show daily average flow rates at influent and discharge points and approximate daily flow rates between treatment units. Include a brief narrative description of the diagram.

B.4. Operation/Maintenance Performed by Contractor(s).

Are any operational or maintenance aspects (related to wastewater treatment and effluent quality) of the treatment works the responsibility of a contractor? ____Yes ✓ No

If yes, list the name, address, telephone number, and status of each contractor and describe the contractor's responsibilities (attach additional pages if necessary).

Name: N/A

Mailing Address: N/A

Telephone Number: N/A

Responsibilities of Contractor: N/A

B.5. Scheduled Improvements and Schedules of Implementation. Provide information on any uncompleted implementation schedule or uncompleted plans for improvements that will affect the wastewater treatment, effluent quality, or design capacity of the treatment works. If the treatment works has several different implementation schedules or is planning several improvements, submit separate responses to question B.5 for each. (If none, go to question B.6.)

a. List the outfall number (assigned in question A.9) for each outfall that is covered by this implementation schedule.

001, 002

b. Indicate whether the planned improvements or implementation schedule are required by local, State, or Federal agencies.

____Yes ✓ No

c If the answer to B.5.b is "Yes," briefly describe, including new maximum daily inflow rate (if applicable).

Design and construction to meet annual average TN discharge concentration of 3.0 mg/L.

d. Provide dates imposed by any compliance schedule or any actual dates of completion for the implementation steps listed below, as applicable. For improvements planned independently of local, State, or Federal agencies, indicate planned or actual completion dates, as applicable. Indicate dates as accurately as possible.

Implementation Stage	Schedule MM / DD / YYYY	Actual Completion MM / DD / YYYY
– Begin construction	08 / ___ / 2010	08 / ___ / 2010
– End construction	10 / ___ / 2014	___ / ___ / ___
– Begin discharge	___ / ___ / N/A	___ / ___ / ___
– Attain operational level	11 / ___ / 2014	___ / ___ / ___

e. Have appropriate permits/clearances concerning other Federal/State requirements been obtained? ✓ Yes ___ No

Describe briefly: General permit for nutrient discharges in place. General permit for stormwater discharges from Industrial Facilities.

B.6. EFFLUENT TESTING DATA (GREATER THAN O.1 MGD ONLY).

Applicants that discharge to waters of the US must provide effluent testing data for the following parameters. Provide the indicated effluent testing required by the permitting authority for each outfall through which effluent is discharged. Do not include information on combined sewer overflows in this section. All information reported must be based on data collected through analysis conducted using 40 CFR Part 136 methods. In addition, this data must comply with QA/QC requirements of 40 CFR Part 136 and other appropriate QA/QC requirements for standard methods for analytes not addressed by 40 CFR Part 136. At a minimum, effluent testing data must be based on at least three pollutant scans and must be no more than four and one-half years old.

Outfall Number: 001 (See Additional Information)

POLLUTANT	MAXIMUM DAILY DISCHARGE		AVERAGE DAILY DISCHARGE			ANALYTICAL METHOD	ML / MDL
	Conc.	Units	Conc.	Units	Number of Samples		
CONVENTIONAL AND NONCONVENTIONAL COMPOUNDS.							
AMMONIA (as N)	1.7	mg/L	0.1	mg/L	366	EPA 350.1	0.01 mg/L
CHLORINE (TOTAL RESIDUAL, TRC)	N/A	N/A	N/A	N/A	N/A	N/A	N/A
DISSOLVED OXYGEN	10.3	mg/L	8.8	mg/L	366	SM 4500- O G	0.2 mg/L
TOTAL KJELDAHL NITROGEN (TKN)	3.0	mg/L	1.1	mg/L	366	EPA 351.2	0.057 mg/L
NITRATE PLUS NITRITE NITROGEN	7.5	mg/L	2.8	mg/L	366	EPA 353.2	0.01 mg/L
OIL and GREASE	10	mg/L	<5.3	mg/L	26	EPA 1664A	5.0 mg/L
PHOSPHORUS (Total)	0.19	mg/L	<0.07	mg/L	366	EPA 365.4	0.01 mg/L
TOTAL DISSOLVED SOLIDS (TDS)	321	mg/L	304	mg/L	3	SM 2540C	5.0 mg/L
OTHER	N/A	N/A	N/A	N/A	N/A	N/A	N/A

END OF PART B.
REFER TO THE APPLICATION OVERVIEW TO DETERMINE WHICH OTHER PARTS OF FORM 2A YOU MUST COMPLETE

FACILITY NAME AND PERMIT NUMBER:

Alexandria Renew Enterprises VA0025160

Form Approved 1/14/99
OMB Number 2040-0086

BASIC APPLICATION INFORMATION

PART C. CERTIFICATION

All applicants must complete the Certification Section. Refer to instructions to determine who is an officer for the purposes of this certification. All applicants must complete all applicable sections of Form 2A, as explained in the Application Overview. Indicate below which parts of Form 2A you have completed and are submitting. By signing this certification statement, applicants confirm that they have reviewed Form 2A and have completed all sections that apply to the facility for which this application is submitted.

Indicate which parts of Form 2A you have completed and are submitting:

✓ Basic Application Information packet

Supplemental Application Information packet:

✓ Part D (Expanded Effluent Testing Data)

✓ Part E (Toxicity Testing: Biomonitoring Data)

✓ Part F (Industrial User Discharges and RCRA/CERCLA Wastes)

✓ Part G (Combined Sewer Systems)

ALL APPLICANTS MUST COMPLETE THE FOLLOWING CERTIFICATION.

I certify under penalty of law that this document and all attachments were prepared under my direction or supervision in accordance with a system designed to assure that qualified personnel properly gather and evaluate the information submitted. Based on my inquiry of the person or persons who manage the system or those persons directly responsible for gathering the information, the information is, to the best of my knowledge and belief, true, accurate, and complete. I am aware that there are significant penalties for submitting false information, including the possibility of fine and imprisonment for knowing violations.

Name and official title: Karen L Pallansch, Chief Executive Officer

Signature: Karen Pallansch

Telephone number: (703) 549-3381

Date signed: 10·31·13

Upon request of the permitting authority, you must submit any other information necessary to assess wastewater treatment practices at the treatment works or identify appropriate permitting requirements.

SEND COMPLETED FORMS TO:

FACILITY NAME AND PERMIT NUMBER:
Alexandria Renew Enterprises VA0025160

Form Approved 1/14/99
OMB Number 2040-0086

SUPPLEMENTAL APPLICATION INFORMATION

PART D. EXPANDED EFFLUENT TESTING DATA

Refer to the directions on the cover page to determine whether this section applies to the treatment works.

Effluent Testing: 1.0 mgd and Pretreatment Treatment Works. If the treatment works has a design flow greater than or equal to 1.0 mgd or it has (or is required to have) a pretreatment program, or is otherwise required by the permitting authority to provide the data, then provide effluent testing data for the following pollutants. Provide the indicated effluent testing information and any other information required by the permitting authority for each outfall through which effluent is discharged. Do not include information on combined sewer overflows in this section. All information reported must be based on data collected through analyses conducted using 40 CFR Part 136 methods. In addition, these data must comply with QA/QC requirements of 40 CFR Part 136 and other appropriate QA/QC requirements for standard methods for analytes not addressed by 40 CFR Part 136. Indicate in the blank rows provided below any data you may have on pollutants not specifically listed in this form. At a minimum, effluent testing data must be based on at least three pollutant scans and must be no more than four and one-half years old.

Outfall number: 001 See Additional Information (Complete once for each outfall discharging effluent to waters of the United States.)

POLLUTANT	MAXIMUM DAILY DISCHARGE				AVERAGE DAILY DISCHARGE					ANALYTICAL METHOD	ML/ MDL
	Conc.	Units	Mass	Units	Conc.	Units	Mass	Units	Number of Samples		
METALS (TOTAL RECOVERABLE), CYANIDE, PHENOLS, AND HARDNESS.											
ANTIMONY	<5	ug/L	N/A	N/A	<5	ug/L	N/A	N/A	17	See Add. Info.	5 ug/L
ARSENIC	<5	ug/L	N/A	N/A	<5	ug/L	N/A	N/A	17	See Add. Info.	5 ug/L
BERYLLIUM	<0.5	ug/L	N/A	N/A	<0.5	ug/L	N/A	N/A	17	See Add. Info.	<0.5 ug/L
CADMIUM	<0.5	ug/L	N/A	N/A	<0.5	ug/L	N/A	N/A	17	See Add. Info.	<0.5 ug/L
CHROMIUM	<2	ug/L	N/A	N/A	<1.8	ug/L	N/A	N/A	17	See Add. Info	2 ug/L
COPPER	21	ug/L	N/A	N/A	8	ug/L	N/A	N/A	17	See Add. Info	2 ug/L
LEAD	<5	ug/L	N/A	N/A	<2.5	ug/L	N/A	N/A	17	See Add. Info	5 ug/L
MERCURY	<0.5	ug/L	N/A	N/A	<0.45	ug/L	N/A	N/A	17	See Add. Info	0.5 ug/L
NICKEL	<5	ug/L	N/A	N/A	<3	ug/L	N/A	N/A	17	See Add. Info	5 ug/L
SELENIUM	<5	ug/L	N/A	N/A	<5	ug/L	N/A	N/A	17	See Add. Info	5 ug/L
SILVER	<1	ug/L	N/A	N/A	<1	ug/L	N/A	N/A	17	See Add. Info	1 ug/L
THALLIUM	<5	ug/L	N/A	N/A	<2.5	ug/L	N/A	N/A	17	See Add. Info	5 ug/L
ZINC	160	ug/L	N/A	N/A	42	ug/L	N/A	N/A	17	See Add. Info	10 ug/L
CYANIDE	<5	ug/L	N/A	N/A	<5	ug/L	N/A	N/A	19	See Add. Info	5 ug/L
TOTAL PHENOLIC COMPOUNDS	20	ug/L	N/A	N/A	<12	ug/L	N/A	N/A	19	EPA 420.4	20 ug/L
HARDNESS (AS $CaCO_3$)	530	mg/L	N/A	N/A	119	mg/L	N/A	N/A	305	See Add. Info	10 mg/L
Use this space (or a separate sheet) to provide information on other metals requested by the permit writer.											

FACILITY NAME AND PERMIT NUMBER:
Alexandria Renew Enterprises VA0025160

Form Approved 1/14/99
OMB Number 2040-0086

Outfall number: 001 (Complete once for each outfall discharging effluent to waters of the United States.)

POLLUTANT	MAXIMUM DAILY DISCHARGE				AVERAGE DAILY DISCHARGE					ANALYTICAL METHOD	ML/ MDL
	Conc.	Units	Mass	Units	Conc.	Units	Mass	Units	Number of Samples		
VOLATILE ORGANIC COMPOUNDS.											
ACROLEIN	<50	ug/L	N/A	N/A	<34	ug/L	N/A	N/A	5	EPA 624	50 ug/L
ACRYLONITRILE	<50	ug/L	N/A	N/A	<34	ug/L	N/A	N/A	5	EPA 624	50 ug/L
BENZENE	<5	ug/L	N/A	N/A	<5	ug/L	N/A	N/A	5	EPA 624	5 ug/L
BROMOFORM	<5	ug/L	N/A	N/A	<5	ug/L	N/A	N/A	5	EPA 624	5 ug/L
CARBON TETRACHLORIDE	<5	ug/L	N/A	N/A	<5	ug/L	N/A	N/A	5	EPA 624	5 ug/L
CLOROBENZENE	<5	ug/L	N/A	N/A	<5	ug/L	N/A	N/A	5	EPA 624	5 ug/L
CHLORODIBROMO-METHANE	<5	ug/L	N/A	N/A	<5	ug/L	N/A	N/A	5	EPA 624	5 ug/L
CHLOROETHANE	<5	ug/L	N/A	N/A	<5	ug/L	N/A	N/A	5	EPA 624	5 ug/L
2-CHLORO-ETHYLVINYL ETHER	<5	ug/L	N/A	N/A	<5	ug/L	N/A	N/A	5	EPA 624	10 ug/L
CHLOROFORM	<5	ug/L	N/A	N/A	<5	ug/L	N/A	N/A	5	EPA 624	5 ug/L
DICHLOROBROMO-METHANE	<5	ug/L	N/A	N/A	<5	ug/L	N/A	N/A	5	EPA 624	5 ug/L
1,1-DICHLOROETHANE	<5	ug/L	N/A	N/A	<5	ug/L	N/A	N/A	5	EPA 624	5 ug/L
1,2-DICHLOROETHANE	<5	ug/L	N/A	N/A	<5	ug/L	N/A	N/A	5	EPA 624	5 ug/L
TRANS-1,2-DICHLORO-ETHYLENE	<5	ug/L	N/A	N/A	<5	ug/L	N/A	N/A	5	EPA 624	5 ug/L
1,1-DICHLOROETHYLENE	<5	ug/L	N/A	N/A	<5	ug/L	N/A	N/A	5	EPA 624	5 ug/L
1,2-DICHLOROPROPANE	<5	ug/L	N/A	N/A	<5	ug/L	N/A	N/A	5	EPA 624	5 ug/L
1,3-DICHLORO-PROPYLENE	<5	ug/L	N/A	N/A	<5	ug/L	N/A	N/A	5	EPA 624	5 ug/L
ETHYLBENZENE	<5	ug/L	N/A	N/A	<5	ug/L	N/A	N/A	5	EPA 624	5 ug/L
METHYL BROMIDE	<5	ug/L	N/A	N/A	<5	ug/L	N/A	N/A	5	EPA 624	5 ug/L
METHYL CHLORIDE	<5	ug/L	N/A	N/A	<5	ug/L	N/A	N/A	5	EPA 624	5 ug/L
METHYLENE CHLORIDE	<5	ug/L	N/A	N/A	<5	ug/L	N/A	N/A	5	EPA 624	5 ug/L
1,1,2,2-TETRACHLORO-ETHANE	<5	ug/L	N/A	N/A	<5	ug/L	N/A	N/A	5	EPA 624	5 ug/L
TETRACHLORO-ETHYLENE	<5	ug/L	N/A	N/A	<5	ug/L	N/A	N/A	5	EPA 624	5 ug/L
TOLUENE	<5	ug/L	N/A	N/A	<5	ug/L	N/A	N/A	5	EPA 624	5 ug/L

FACILITY NAME AND PERMIT NUMBER:
Alexandria Renew Enterprises VA0025160

Form Approved 1/14/99
OMB Number 2040-0086

Outfall number: 001 (Complete once for each outfall discharging effluent to waters of the United States.)

POLLUTANT	MAXIMUM DAILY DISCHARGE				AVERAGE DAILY DISCHARGE					ANALYTICAL METHOD	ML/ MDL
	Conc.	Units	Mass	Units	Conc.	Units	Mass	Units	Number of Samples		
1,1,1-TRICHLOROETHANE	<5	ug/L	N/A	N/A	<5	ug/L	N/A	N/A	5	EPA 624	5 ug/L
1,1,2-TRICHLOROETHANE	<5	ug/L	N/A	N/A	<5	ug/L	N/A	N/A	5	EPA 624	5 ug/L
TRICHLORETHYLENE	<5	ug/L	N/A	N/A	<5	ug/L	N/A	N/A	5	EPA 624	5 ug/L
VINYL CHLORIDE	<5	ug/L	N/A	N/A	<5	ug/L	N/A	N/A	5	EPA 624	5 ug/L
Use this space (or a separate sheet) to provide information on other volatile organic compounds requested by the permit writer.											
ACID-EXTRACTABLE COMPOUNDS											
P-CHLORO-M-CRESOL	<5.1	ug/L	N/A	N/A	<5.0	ug/L	N/A	N/A	5	EPA 625	5.1 ug/L
2-CHLOROPHENOL	<5.1	ug/L	N/A	N/A	<5.0	ug/L	N/A	N/A	5	EPA 625	5.1 ug/L
2,4-DICHLOROPHENOL	<5.1	ug/L	N/A	N/A	<5.0	ug/L	N/A	N/A	5	EPA 625	5.1 ug/L
2,4-DIMETHYLPHENOL	<5.1	ug/L	N/A	N/A	<5.0	ug/L	N/A	N/A	5	EPA 625	5.1 ug/L
4,6-DINITRO-O-CRESOL	<10.2	ug/L	N/A	N/A	<7.1	ug/L	N/A	N/A	5	EPA 625	10.2 ug/L
2,4-DINITROPHENOL	<20	ug/L	N/A	N/A	<14	ug/L	N/A	N/A	5	EPA 625	20 ug/L
2-NITROPHENOL	<5.1	ug/L	N/A	N/A	<5.0	ug/L	N/A	N/A	5	EPA 625	5.1 ug/L
4-NITROPHENOL	<5.1	ug/L	N/A	N/A	<5.0	ug/L	N/A	N/A	5	EPA 625	5.1 ug/L
PENTACHLOROPHENOL	<10.2	ug/L	N/A	N/A	<10.1	ug/L	N/A	N/A	5	EPA 625	10.2 ug/L
PHENOL	<5.1	ug/L	N/A	N/A	<5.0	ug/L	N/A	N/A	5	EPA 625	5.1 ug/L
2,4,6-TRICHLOROPHENOL	<5.1	ug/L	N/A	N/A	<5.0	ug/L	N/A	N/A	5	EPA 625	5.1 ug/L
Use this space (or a separate sheet) to provide information on other acid-extractable compounds requested by the permit writer.											
BASE-NEUTRAL COMPOUNDS.											
ACENAPHTHENE	<5.1	ug/L	N/A	N/A	<5.0	ug/L	N/A	N/A	5	EPA 625	5.1 ug/L
ACENAPHTHYLENE	<5.1	ug/L	N/A	N/A	<5.0	ug/L	N/A	N/A	5	EPA 625	5.1 ug/L
ANTHRACENE	<5.1	ug/L	N/A	N/A	<5.0	ug/L	N/A	N/A	5	EPA 625	5.1 ug/L
BENZIDINE	<5.1	ug/L	N/A	N/A	<5.0	ug/L	N/A	N/A	5	EPA 625	5.1 ug/L
BENZO(A)ANTHRACENE	<5.1	ug/L	N/A	N/A	<5.0	ug/L	N/A	N/A	5	EPA 625	5.1 ug/L
BENZO(A)PYRENE	<5.1	ug/L	N/A	N/A	<5.0	ug/L	N/A	N/A	5	EPA 625	5.1 ug/L

FACILITY NAME AND PERMIT NUMBER:
Alexandria Renew Enterprises VA0025160

Form Approved 1/14/99
OMB Number 2040-0086

Outfall number: 001 (Complete once for each outfall discharging effluent to waters of the United States.)

POLLUTANT	MAXIMUM DAILY DISCHARGE				AVERAGE DAILY DISCHARGE					ANALYTICAL METHOD	ML/ MDL
	Conc.	Units	Mass	Units	Conc.	Units	Mass	Units	Number of Samples		
3,4 BENZO-FLUORANTHENE	<5.1	ug/L	N/A	N/A	<5.0	ug/L	N/A	N/A	5	EPA 625	5.1 ug/L
BENZO(GHI)PERYLENE	<5.1	ug/L	N/A	N/A	<5.0	ug/L	N/A	N/A	5	EPA 625	5.1 ug/L
BENZO(K)FLUORANTHENE	<5.1	ug/L	N/A	N/A	<5.0	ug/L	N/A	N/A	5	EPA 625	5.1 ug/L
BIS (2-CHLOROETHOXY) METHANE	<5.1	ug/L	N/A	N/A	<5.0	ug/L	N/A	N/A	5	EPA 625	5.1 ug/L
BIS (2-CHLOROETHYL)-ETHER	<5.1	ug/L	N/A	N/A	<5.0	ug/L	N/A	N/A	5	EPA 625	5.1 ug/L
BIS (2-CHLOROISO-PROPYL) ETHER	<5.1	ug/L	N/A	N/A	<5.0	ug/L	N/A	N/A	5	EPA 625	5.1 ug/L
BIS (2-ETHYLHEXYL) PHTHALATE	<5.1	ug/L	N/A	N/A	<5.0	ug/L	N/A	N/A	5	EPA 625	5.1 ug/L
4-BROMOPHENYL PHENYL ETHER	<5.1	ug/L	N/A	N/A	<5.0	ug/L	N/A	N/A	5	EPA 625	5.1 ug/L
BUTYL BENZYL PHTHALATE	<5.1	ug/L	N/A	N/A	<5.0	ug/L	N/A	N/A	5	EPA 625	5.1 ug/L
2-CHLORONAPHTHALENE	<5.1	ug/L	N/A	N/A	<5.0	ug/L	N/A	N/A	5	EPA 625	5.1 ug/L
4-CHLORPHENYL PHENYL ETHER	<5.1	ug/L	N/A	N/A	<5.0	ug/L	N/A	N/A	5	EPA 625	5.1 ug/L
CHRYSENE	<5.1	ug/L	N/A	N/A	<5.0	ug/L	N/A	N/A	5	EPA 625	5.1 ug/L
DI-N-BUTYL PHTHALATE	<5.1	ug/L	N/A	N/A	<5.0	ug/L	N/A	N/A	5	EPA 625	5.1 ug/L
DI-N-OCTYL PHTHALATE	<5.1	ug/L	N/A	N/A	<5.0	ug/L	N/A	N/A	5	EPA 625	5.1 ug/L
DIBENZO(A,H) ANTHRACENE	<5.1	ug/L	N/A	N/A	<5.0	ug/L	N/A	N/A	5	EPA 625	5.1 ug/L
1,2-DICHLOROBENZENE	<5.1	ug/L	N/A	N/A	<5.0	ug/L	N/A	N/A	5	See Add. Info	5.1 ug/L
1,3-DICHLOROBENZENE	<5.1	ug/L	N/A	N/A	<5.0	ug/L	N/A	N/A	5	See Add. Info	5.1 ug/L
1,4-DICHLOROBENZENE	<5.1	ug/L	N/A	N/A	<5.0	ug/L	N/A	N/A	5	See Add. Info	5.1 ug/L
3,3-DICHLOROBENZIDINE	<5.1	ug/L	N/A	N/A	<5.0	ug/L	N/A	N/A	5	EPA 625	5.1 ug/L
DIETHYL PHTHALATE	<5.1	ug/L	N/A	N/A	<5.0	ug/L	N/A	N/A	5	EPA 625	5.1 ug/L
DIMETHYL PHTHALATE	<5.1	ug/L	N/A	N/A	<5.0	ug/L	N/A	N/A	5	EPA 625	5.1 ug/L
2,4-DINITROTOLUENE	<5.1	ug/L	N/A	N/A	<5.0	ug/L	N/A	N/A	5	EPA 625	5.1 ug/L
2,6-DINITROTOLUENE	<5.1	ug/L	N/A	N/A	<5.0	ug/L	N/A	N/A	5	EPA 625	5.1 ug/L
1,2-DIPHENYLHYDRAZINE	<5.1	ug/L	N/A	N/A	<5.0	ug/L	N/A	N/A	5	EPA 625	5.1 ug/L

FACILITY NAME AND PERMIT NUMBER:
Alexandria Renew Enterprises VA0025160

Form Approved 1/14/99
OMB Number 2040-0086

Outfall number: 001 (Complete once for each outfall discharging effluent to waters of the United States.)

POLLUTANT	MAXIMUM DAILY DISCHARGE				AVERAGE DAILY DISCHARGE					ANALYTICAL METHOD	ML/ MDL
	Conc.	Units	Mass	Units	Conc.	Units	Mass	Units	Number of Samples		
FLUORANTHENE	<5.1	ug/L	N/A	N/A	<5.0	ug/L	N/A	N/A	5	EPA 625	5.1 ug/L
FLUORENE	<5.1	ug/L	N/A	N/A	<5.0	ug/L	N/A	N/A	5	EPA 625	5.1 ug/L
HEXACHLOROBENZENE	<5.1	ug/L	N/A	N/A	<5.0	ug/L	N/A	N/A	5	EPA 625	5.1 ug/L
HEXACHLOROBUTADIENE	<5.1	ug/L	N/A	N/A	<5.0	ug/L	N/A	N/A	5	EPA 625	5.1 ug/L
HEXACHLOROCYCLO-PENTADIENE	<5.1	ug/L	N/A	N/A	<5.0	ug/L	N/A	N/A	5	EPA 625	5.1 ug/L
HEXACHLOROETHANE	<5.1	ug/L	N/A	N/A	<5.0	ug/L	N/A	N/A	5	EPA 625	5.1 ug/L
INDENO(1,2,3-CD)PYRENE	<5.1	ug/L	N/A	N/A	<5.0	ug/L	N/A	N/A	5	EPA 625	5.1 ug/L
ISOPHORONE	<5.1	ug/L	N/A	N/A	<5.0	ug/L	N/A	N/A	5	EPA 625	5.1 ug/L
NAPHTHALENE	<5.1	ug/L	N/A	N/A	<5.0	ug/L	N/A	N/A	5	EPA 625	5.1 ug/L
NITROBENZENE	<5.1	ug/L	N/A	N/A	<5.0	ug/L	N/A	N/A	5	EPA 625	5.1 ug/L
N-NITROSODI-N-PROPYLAMINE	<5.1	ug/L	N/A	N/A	<5.0	ug/L	N/A	N/A	5	EPA 625	5.1 ug/L
N-NITROSODI- METHYLAMINE	<5.1	ug/L	N/A	N/A	<5.0	ug/L	N/A	N/A	5	EPA 625	5.1 ug/L
N-NITROSODI-PHENYLAMINE	<5.1	ug/L	N/A	N/A	<5.0	ug/L	N/A	N/A	5	EPA 625	5.1 ug/L
PHENANTHRENE	<5.1	ug/L	N/A	N/A	<5.0	ug/L	N/A	N/A	5	EPA 625	5.1 ug/L
PYRENE	<5.1	ug/L	N/A	N/A	<5.0	ug/L	N/A	N/A	5	EPA 625	5.1 ug/L
1,2,4-TRICHLOROBENZENE	<5.1	ug/L	N/A	N/A	<5.0	ug/L	N/A	N/A	5	EPA 625	5.1 ug/L
Use this space (or a separate sheet) to provide information on other base-neutral compounds requested by the permit writer.											
Use this space (or a separate sheet) to provide information on other pollutants (e.g., pesticides) requested by the permit writer.											

END OF PART D.
REFER TO THE APPLICATION OVERVIEW TO DETERMINE WHICH OTHER PARTS OF FORM 2A YOU MUST COMPLETE

FACILITY NAME AND PERMIT NUMBER:
Alexandria Renew Enterprises VA0025160

Form Approved 1/14/99
OMB Number 2040-0086

SUPPLEMENTAL APPLICATION INFORMATION

PART E. TOXICITY TESTING DATA

POTWs meeting one or more of the following criteria must provide the results of whole effluent toxicity tests for acute or chronic toxicity for each of the facility's discharge points: 1) POTWs with a design flow rate greater than or equal to 1.0 mgd; 2) POTWs with a pretreatment program (or those that are required to have one under 40 CFR Part 403); or 3) POTWs required by the permitting authority to submit data for these parameters.

- At a minimum, these results must include quarterly testing for a 12-month period within the past 1 year using multiple species (minimum of two species), or the results from four tests performed at least annually in the four and one-half years prior to the application, provided the results show no appreciable toxicity, and testing for acute and/or chronic toxicity, depending on the range of receiving water dilution. Do not include information on combined sewer overflows in this section. All information reported must be based on data collected through analysis conducted using 40 CFR Part 136 methods. In addition, this data must comply with QA/QC requirements of 40 CFR Part 136 and other appropriate QA/QC requirements for standard methods for analytes not addressed by 40 CFR Part 136.
- In addition, submit the results of any other whole effluent toxicity tests from the past four and one-half years. If a whole effluent toxicity test conducted during the past four and one-half years revealed toxicity, provide any information on the cause of the toxicity or any results of a toxicity reduction evaluation, if one was conducted.
- If you have already submitted any of the information requested in Part E, you need not submit it again. Rather, provide the information requested in question E.4 for previously submitted information. If EPA methods were not used, report the reasons for using alternate methods. If test summaries are available that contain all of the information requested below, they may be submitted in place of Part E.

If no biomonitoring data is required, do not complete Part E. Refer to the Application Overview for directions on which other sections of the form to complete.

E.1. Required Tests.

Indicate the number of whole effluent toxicity tests conducted in the past four and one-half years.

5 chronic ____ acute

E.2. Individual Test Data. Complete the following chart for each whole effluent toxicity test conducted in the last four and one-half years. Allow one column per test (where each species constitutes a test). Copy this page if more than three tests are being reported.

	Test number: 1 (2009)	Test number: 2 (2010)	Test number: 3 (2011)
a. Test information.			
Test species & test method number	Pimephales promelas, 1000.0 Ceriodaphnia dubia, 1002.0	Pimephales promelas, 1000.0 Ceriodaphnia dubia, 1002.0	Pimephales promelas, 1000.0 Ceriodaphnia dubia, 1002.0
Age at initiation of test	<24 Hours	<24 Hours	<24 Hours
Outfall number	001	001	001
Dates sample collected	May 31-June 1, June 2-3, June 4-5, 2009	16 - 17, 18 - 19, 20 - 21, May 2010 and 15 - 16, 17 - 18, 20 - 21 June 2010. Data reported on the last three sample dates.	April 3-4, 5-6, 7-8, 26-27, 28-29, May 1-2, 2011
Date test started	June 16, 2009	June 17, 2010	April 28, 2011
Duration	7 Days	7 Days	7 Days
b. Give toxicity test methods followed.			
Manual title	Short-term Methods for Estimating the Chronic Toxicity of Effluent and Receiving waters to Freshwater Organisms	Short-term Methods for Estimating the Chronic Toxicity of Effluent and Receiving waters to Freshwater Organisms	Short-term Methods for Estimating the Chronic Toxicity of Effluent and Receiving waters to Freshwater Organisms
Edition number and year of publication	4th Edition, 2002	4th Edition, 2002	4th Edition, 2002
Page number(s)	53-140 and 141-196	53-140 and 141-196	53-140 and 141-196
c. Give the sample collection method(s) used. For multiple grab samples, indicate the number of grab samples used.			
24-Hour composite	Yes	Yes	Yes
Grab	No	No	No
d. Indicate where the sample was taken in relation to disinfection. (Check all that apply for each)			
Before disinfection	No	No	No
After disinfection	Yes	Yes	Yes
After dechlorination	N/A	N/A	N/A

FACILITY NAME AND PERMIT NUMBER:
Alexandria Renew Enterprises VA0025160

Form Approved 1/14/99
OMB Number 2040-0086

	Test number: 1 (2009)	Test number: 2 (2010)	Test number: 3 (2011)
e. Describe the point in the treatment process at which the sample was collected.			
Sample was collected:	At outfall after post-aeration	At outfall after post-aeration	At outfall after post-aearation
f. For each test, include whether the test was intended to assess chronic toxicity, acute toxicity, or both.			
Chronic toxicity	Yes	Yes	Yes
Acute toxicity	No	No	No
g. Provide the type of test performed.			
Static	No	No	No
Static-renewal	Yes	Yes	Yes
Flow-through	No	No	No
h. Source of dilution water. If laboratory water, specify type; if receiving water, specify source.			
Laboratory water	Moderately hard synthetic fresh water	Moderately hard synthetic fresh water	Moderately hard synthetic fresh water
Receiving water	N/A	N/A	N/A
i. Type of dilution water. It salt water, specify "natural" or type of artificial sea salts or brine used.			
Fresh water	Yes	Yes	Yes
Salt water	N/A	N/A	N/A
j. Give the percentage effluent used for all concentrations in the test series.			
	11.4 %, 22.8 %, 45.5 %, 91%, and 100%	11.4 %, 22.8 %, 45.5 %, 91%, and 100%	11.4 %, 22.8 %, 45.5 %, 91%, and 100%
	N/A	N/A	N/A
	N/A	N/A	N/A
k. Parameters measured during the test. (State whether parameter meets test method specifications)			
pH	Yes	Yes	Yes
Salinity	No	No	No
Temperature	Yes	Yes	Yes
Ammonia	Yes	Yes	Yes
Dissolved oxygen	Yes	Yes	Yes
l. Test Results.			
Acute:			
Percent survival in 100% effluent	N/A %	N/A %	N/A %
LC_{50}	N/A	N/A	N/A
95% C.I.	N/A %	N/A %	N/A %
Control percent survival	N/A %	N/A %	N/A %
Other (describe)	N/A	N/A	N/A

FACILITY NAME AND PERMIT NUMBER:
Alexandria Renew Enterprises VA0025160

Form Approved 1/14/99
OMB Number 2040-0086

Chronic:			
NOEC	Ceriodaphnia dubia: 100 Pimephales promelas: 100 %	Ceriodaphnia dubia: 100 Pimephales promelas: 100 %	Ceriodaphnia dubia: 100 Pimephales promelas: 100 %
IC_{25}	Ceriodaphnia dubia: >100 Pimephales promelas: >100 %	Ceriodaphnia dubia: >100 Pimephales promelas: >100 %	Ceriodaphnia dubia: >100 Pimephales promelas: >100 %
Control percent survival	Ceriodaphnia dubia: 100 Pimephales promelas: 100 %	Ceriodaphnia dubia: 90 Pimephales promelas: 93 %	Ceriodaphnia dubia: 100 Pimephales promelas: 95 %
Other (describe)	N/A	N/A	N/A

m. Quality Control/Quality Assurance.

Is reference toxicant data available?	Yes	Yes	Yes
Was reference toxicant test within acceptable bounds?	Yes	Yes	
What date was reference toxicant test run (MM/DD/YYYY)?	6/16/09	6/15/10 and 5/10/10	4/5/11 and 4/12/11
Other (describe)	N/A	N/A	N/A

E.3. Toxicity Reduction Evaluation. Is the treatment works involved in a Toxicity Reduction Evaluation?

___Yes ✓ No If yes, describe: _____

E.4. Summary of Submitted Biomonitoring Test Information. If you have submitted biomonitoring test information, or information regarding the cause of toxicity, within the past four and one-half years, provide the dates the information was submitted to the permitting authority and a summary of the results.

Date submitted: _____ (MM/DD/YYYY) Test data was submitted to the Virginia Department of Environmental Quality on July 27, 2009 (for 2009 test data), July 28, 2010 (2010 data), June 7, 2011 (2011 data), June 14, 2012 (2012 data) and August 6, 2013 (2013 data).

Summary of results: (see instructions)

The result of the chronic toxicity tests indicate that the effluent samples were neither acutely nor chronically toxic at the IWC of 91% effluent. The NOEC values for the C.dubia and P.promelas chronic toxicity test are 100% effluent (TUc=1.0).

END OF PART E.
REFER TO THE APPLICATION OVERVIEW TO DETERMINE WHICH OTHER PARTS OF FORM 2A YOU MUST COMPLETE.

FACILITY NAME AND PERMIT NUMBER:
Alexandria Renew Enterprises VA0025160

Form Approved 1/14/99
OMB Number 2040-0086

SUPPLEMENTAL APPLICATION INFORMATION

PART E. TOXICITY TESTING DATA

POTWs meeting one or more of the following criteria must provide the results of whole effluent toxicity tests for acute or chronic toxicity for each of the facility's discharge points: 1) POTWs with a design flow rate greater than or equal to 1.0 mgd; 2) POTWs with a pretreatment program (or those that are required to have one under 40 CFR Part 403); or 3) POTWs required by the permitting authority to submit data for these parameters.

- At a minimum, these results must include quarterly testing for a 12-month period within the past 1 year using multiple species (minimum of two species), or the results from four tests performed at least annually in the four and one-half years prior to the application, provided the results show no appreciable toxicity, and testing for acute and/or chronic toxicity, depending on the range of receiving water dilution. Do not include information on combined sewer overflows in this section. All information reported must be based on data collected through analysis conducted using 40 CFR Part 136 methods. In addition, this data must comply with QA/QC requirements of 40 CFR Part 136 and other appropriate QA/QC requirements for standard methods for analytes not addressed by 40 CFR Part 136.
- In addition, submit the results of any other whole effluent toxicity tests from the past four and one-half years. If a whole effluent toxicity test conducted during the past four and one-half years revealed toxicity, provide any information on the cause of the toxicity or any results of a toxicity reduction evaluation, if one was conducted.
- If you have already submitted any of the information requested in Part E, you need not submit it again. Rather, provide the information requested in question E.4 for previously submitted information. If EPA methods were not used, report the reasons for using alternate methods. If test summaries are available that contain all of the information requested below, they may be submitted in place of Part E.

If no biomonitoring data is required, do not complete Part E. Refer to the Application Overview for directions on which other sections of the form to complete.

E.1. Required Tests.

Indicate the number of whole effluent toxicity tests conducted in the past four and one-half years.

5 chronic ____ acute

E.2. Individual Test Data. Complete the following chart for each whole effluent toxicity test conducted in the last four and one-half years. Allow one column per test (where each species constitutes a test). Copy this page if more than three tests are being reported.

	Test number: 4 (2012)	Test number: 5 (2013)	Test number: ____
a. Test information.			
Test species & test method number	Pimephales promelas, 1000.0 Ceriodaphnia dubia, 1002.0	Pimephales promelas, 1000.0 Ceriodaphnia dubia, 1002.0	
Age at initiation of test	<24 Hours	<24 Hours	
Outfall number	001	001	
Dates sample collected	May 6-7, 8-9, 10-11, 2012	June 23-24, 25-26, 27-28, 2013	
Date test started	May 8, 2012	June 25, 2013	
Duration	7 Days	7 Days	
b. Give toxicity test methods followed.			
Manual title	Short-term Methods for Estimating the Chronic Toxicity of Effluent and Receiving waters to Freshwater Organisms	Short-term Methods for Estimating the Chronic Toxicity of Effluent and Receiving waters to Freshwater Organisms	
Edition number and year of publication	4th Edition, 2002	4th Edition, 2002	
Page number(s)	53-140 and 141-196	53-140 and 141-196	
c. Give the sample collection method(s) used. For multiple grab samples, indicate the number of grab samples used.			
24-Hour composite	Yes	Yes	
Grab	No	No	
d. Indicate where the sample was taken in relation to disinfection. (Check all that apply for each)			
Before disinfection	No	No	
After disinfection	Yes	Yes	
After dechlorination	N/A	N/A	

FACILITY NAME AND PERMIT NUMBER:
Alexandria Renew Enterprises VA0025160

Form Approved 1/14/99
OMB Number 2040-0086

	Test number: 4 (2012)	Test number: 5 (2013)	Test number: _____
e. Describe the point in the treatment process at which the sample was collected.			
Sample was collected:	At outfall after post-aeration	At outfall after post-aeration	
f. For each test, include whether the test was intended to assess chronic toxicity, acute toxicity, or both.			
Chronic toxicity	Yes	Yes	
Acute toxicity	No	No	
g. Provide the type of test performed.			
Static	No	No	
Static-renewal	Yes	Yes	
Flow-through	No	No	
h. Source of dilution water. If laboratory water, specify type; if receiving water, specify source.			
Laboratory water	Moderately hard synthetic fresh water	Moderately hard synthetic fresh water	
Receiving water	N/A	N/A	
i. Type of dilution water. If salt water, specify "natural" or type of artificial sea salts or brine used.			
Fresh water	Yes	Yes	
Salt water	N/A	N/A	
j. Give the percentage effluent used for all concentrations in the test series.			
	11.4 %, 22.8 %, 45.5 %, 91%, and 100%	11.4 %, 22.8 %, 45.5 %, 91%, and 100%	
	N/A	N/A	
	N/A	N/A	
k. Parameters measured during the test. (State whether parameter meets test method specifications)			
pH	Yes	Yes	
Salinity	No	No	
Temperature	Yes	Yes	
Ammonia	Yes	Yes	
Dissolved oxygen	Yes	Yes	
l. Test Results.			
Acute:			
Percent survival in 100% effluent	N/A %	N/A %	%
LC_{50}	N/A	N/A	
95% C.I.	N/A %	N/A %	%
Control percent survival	N/A %	N/A %	%
Other (describe)	N/A	N/A	

Chronic:			
NOEC	Ceriodaphnia dubia: 100 Pimephales promelas: 100 %	Ceriodaphnia dubia: 100 Pimephales promelas: 100 %	%
IC_{25}	Ceriodaphnia dubia: >100 Pimephales promelas: >100 %	Ceriodaphnia dubia: >100 Pimephales promelas: >100 %	%
Control percent survival	Ceriodaphnia dubia: 100 Pimephales promelas: 98 %	Ceriodaphnia dubia: 100 Pimephales promelas: 98 %	%
Other (describe)	N/A	N/A	

m. Quality Control/Quality Assurance.

Is reference toxicant data available?	Yes	Yes	
Was reference toxicant test within acceptable bounds?	Yes	Yes	
What date was reference toxicant test run (MM/DD/YYYY)?	5/8/12	6/12/13	
Other (describe)	N/A	N/A	

E.3. Toxicity Reduction Evaluation. Is the treatment works involved in a Toxicity Reduction Evaluation?

____Yes ✓ No If yes, describe: _____

E.4. Summary of Submitted Biomonitoring Test Information. If you have submitted biomonitoring test information, or information regarding the cause of toxicity, within the past four and one-half years, provide the dates the information was submitted to the permitting authority and a summary of the results.

Date submitted: _____ (MM/DD/YYYY) Test data was submitted to the Virginia Department of Environmental Quality on July 27, 2009 (for 2009 test data), July 28, 2010 (2010 data), June 7, 2011 (2011 data), June 14, 2012 (2012 data) and August 6, 2013 (2013 data).

Summary of results: (see instructions)

The result of the chronic toxicity tests indicate that the effluent samples were neither acutely nor chronically toxic at the IWC of 91% effluent. The NOEC values for the C.dubia and P.promelas chronic toxicity test are 100% effluent (TUc=1.0).

END OF PART E.
REFER TO THE APPLICATION OVERVIEW TO DETERMINE WHICH OTHER PARTS OF FORM 2A YOU MUST COMPLETE.

FACILITY NAME AND PERMIT NUMBER:
Alexandria Renew Enterprises VA0025160

Form Approved 1/14/99
OMB Number 2040-0086

SUPPLEMENTAL APPLICATION INFORMATION

PART F. INDUSTRIAL USER DISCHARGES AND RCRA/CERCLA WASTES

All treatment works receiving discharges from significant industrial users or which receive RCRA, CERCLA, or other remedial wastes must complete Part F.

GENERAL INFORMATION:

F.1. Pretreatment Program. Does the treatment works have, or is it subject to, an approved pretreatment program?

✓ Yes ___ No

F.2. Number of Significant Industrial Users (SIUs) and Categorical Industrial Users (CIUs). Provide the number of each of the following types of industrial users that discharge to the treatment works.

a. Number of non-categorical SIUs. 6

b. Number of CIUs. 1

SIGNIFICANT INDUSTRIAL USER INFORMATION:

Supply the following information for each SIU. If more than one SIU discharges to the treatment works, copy questions F.3 through F.8 and provide the information requested for each SIU.

F.3. Significant Industrial User Information. Provide the name and address of each SIU discharging to the treatment works. Submit additional pages as necessary.

Name: Delta Electronics (Fairfax County pretreatment permit)

Mailing Address: 5730 General Washington Drive, Alexandria, VA 22312

F.4. Industrial Processes. Describe all of the industrial processes that affect or contribute to the SIU's discharge.

Chromate conversion coating, painting, aluminum chassis, wire harness and pc board assembly.

F.5. Principal Product(s) and Raw Material(s). Describe all of the principal processes and raw materials that affect or contribute to the SIU's discharge.

Principal product(s): N/A

Raw material(s): N/A

F.6. Flow Rate.

a. Process wastewater flow rate. Indicate the average daily volume of process wastewater discharged into the collection system in gallons per day (gpd) and whether the discharge is continuous or intermittent.

2,000 gpd (___ continuous or ✓ intermittent)

b. Non-process wastewater flow rate. Indicate the average daily volume of non-process wastewater flow discharged into the collection system in gallons per day (gpd) and whether the discharge is continuous or intermittent.

N/A gpd (___ continuous or ___ intermittent)

F.7. Pretreatment Standards. Indicate whether the SIU is subject to the following:

a. Local limits ✓ Yes ___ No

b. Categorical pretreatment standards ✓ Yes ___ No

If subject to categorical pretreatment standards, which category and subcategory?

N/A

F.8. Problems at the Treatment Works Attributed to Waste Discharged by the SIU. Has the SIU caused or contributed to any problems (e.g., upsets, interference) at the treatment works in the past three years?

____Yes ✓ No If yes, describe each episode.

RCRA HAZARDOUS WASTE RECEIVED BY TRUCK, RAIL, OR DEDICATED PIPELINE:

F.9. RCRA Waste. Does the treatment works receive or has it in the past three years received RCRA hazardous waste by truck, rail, or dedicated pipe? ____Yes ✓ No (go to F.12.)

F.10. Waste Transport. Method by which RCRA waste is received (check all that apply):

_____Truck _____Rail _____Dedicated Pipe

F.11. Waste Description. Give EPA hazardous waste number and amount (volume or mass, specify units).

EPA Hazardous Waste Number	Amount	Units
N/A		

CERCLA (SUPERFUND) WASTEWATER, RCRA REMEDIATION/CORRECTIVE ACTION WASTEWATER, AND OTHER REMEDIAL ACTIVITY WASTEWATER:

F.12. Remediation Waste. Does the treatment works currently (or has it been notified that it will) receive waste from remedial activities?

____Yes (complete F.13 through F.15.) ✓ No

Provide a list of sites and the requested information (F.13 - F.15.) for each current and future site.

F.13. Waste Origin. Describe the site and type of facility at which the CERCLA/RCRA/or other remedial waste originates (or is expected to originate in the next five years).

N/A

F.14. Pollutants. List the hazardous constituents that are received (or are expected to be received). Include data on volume and concentration, if known. (Attach additional sheets if necessary).

N/A

F.15. Waste Treatment.

a. Is this waste treated (or will it be treated) prior to entering the treatment works?

____Yes ____No

If yes, describe the treatment (provide information about the removal efficiency):

N/A

b. Is the discharge (or will the discharge be) continuous or intermittent?

____Continuous ____Intermittent If intermittent, describe discharge schedule.

END OF PART F.
REFER TO THE APPLICATION OVERVIEW TO DETERMINE WHICH OTHER PARTS OF FORM 2A YOU MUST COMPLETE

FACILITY NAME AND PERMIT NUMBER:
Alexandria Renew Enterprises VA0025160

Form Approved 1/14/99
OMB Number 2040-0086

SUPPLEMENTAL APPLICATION INFORMATION

PART F. INDUSTRIAL USER DISCHARGES AND RCRA/CERCLA WASTES

All treatment works receiving discharges from significant industrial users or which receive RCRA, CERCLA, or other remedial wastes must complete Part F.

GENERAL INFORMATION:

F.1. Pretreatment Program. Does the treatment works have, or is it subject to, an approved pretreatment program?

✓ Yes ___ No

F.2. Number of Significant Industrial Users (SIUs) and Categorical Industrial Users (CIUs). Provide the number of each of the following types of industrial users that discharge to the treatment works.

a. Number of non-categorical SIUs. 6

b. Number of CIUs. 1

SIGNIFICANT INDUSTRIAL USER INFORMATION:

Supply the following information for each SIU. If more than one SIU discharges to the treatment works, copy questions F.3 through F.8 and provide the information requested for each SIU.

F.3. Significant Industrial User Information. Provide the name and address of each SIU discharging to the treatment works. Submit additional pages as necessary.

Name: INOVA Fairfax Hospital (Fairfax County pretreatment permit)

Mailing Address: 5730 General Washington Drive, Alexandria, VA 22312

F.4. Industrial Processes. Describe all of the industrial processes that affect or contribute to the SIU's discharge.

833 bed tertiary care hospital

F.5. Principal Product(s) and Raw Material(s). Describe all of the principal processes and raw materials that affect or contribute to the SIU's discharge.

Principal product(s): N/A

Raw material(s): N/A

F.6. Flow Rate.

a. Process wastewater flow rate. Indicate the average daily volume of process wastewater discharged into the collection system in gallons per day (gpd) and whether the discharge is continuous or intermittent.

156,000 gpd (✓ continuous or ___ intermittent)

b. Non-process wastewater flow rate. Indicate the average daily volume of non-process wastewater flow discharged into the collection system in gallons per day (gpd) and whether the discharge is continuous or intermittent.

N/A gpd (___ continuous or ___ intermittent)

F.7. Pretreatment Standards. Indicate whether the SIU is subject to the following:

a. Local limits ✓ Yes ___ No

b. Categorical pretreatment standards ___ Yes ✓ No

If subject to categorical pretreatment standards, which category and subcategory?

N/A

FACILITY NAME AND PERMIT NUMBER:
Alexandria Renew Enterprises VA0025160

Form Approved 1/14/99
OMB Number 2040-0086

F.8. Problems at the Treatment Works Attributed to Waste Discharged by the SIU. Has the SIU caused or contributed to any problems (e.g., upsets, interference) at the treatment works in the past three years?

____Yes ✓ No If yes, describe each episode.

RCRA HAZARDOUS WASTE RECEIVED BY TRUCK, RAIL, OR DEDICATED PIPELINE:

F.9. RCRA Waste. Does the treatment works receive or has it in the past three years received RCRA hazardous waste by truck, rail, or dedicated pipe? ____Yes ✓ No (go to F.12.)

F.10. Waste Transport. Method by which RCRA waste is received (check all that apply):

_____Truck _____Rail _____Dedicated Pipe

F.11. Waste Description. Give EPA hazardous waste number and amount (volume or mass, specify units).

EPA Hazardous Waste Number	Amount	Units
N/A		

CERCLA (SUPERFUND) WASTEWATER, RCRA REMEDIATION/CORRECTIVE ACTION WASTEWATER, AND OTHER REMEDIAL ACTIVITY WASTEWATER:

F.12. Remediation Waste. Does the treatment works currently (or has it been notified that it will) receive waste from remedial activities?

____Yes (complete F.13 through F.15.) ✓ No

Provide a list of sites and the requested information (F.13 - F.15.) for each current and future site.

F.13. Waste Origin. Describe the site and type of facility at which the CERCLA/RCRA/or other remedial waste originates (or is expected to originate in the next five years).

N/A

F.14. Pollutants. List the hazardous constituents that are received (or are expected to be received). Include data on volume and concentration, if known. (Attach additional sheets if necessary).

N/A

F.15. Waste Treatment.

a. Is this waste treated (or will it be treated) prior to entering the treatment works?

____Yes ____No

If yes, describe the treatment (provide information about the removal efficiency):

N/A

b. Is the discharge (or will the discharge be) continuous or intermittent?

____Continuous ____Intermittent If intermittent, describe discharge schedule.

END OF PART F.
REFER TO THE APPLICATION OVERVIEW TO DETERMINE WHICH OTHER PARTS OF FORM 2A YOU MUST COMPLETE

FACILITY NAME AND PERMIT NUMBER:
Alexandria Renew Enterprises VA0025160

Form Approved 1/14/99
OMB Number 2040-0086

SUPPLEMENTAL APPLICATION INFORMATION

PART F. INDUSTRIAL USER DISCHARGES AND RCRA/CERCLA WASTES

All treatment works receiving discharges from significant industrial users or which receive RCRA, CERCLA, or other remedial wastes must complete Part F.

GENERAL INFORMATION:

F.1. Pretreatment Program. Does the treatment works have, or is it subject to, an approved pretreatment program?

✓ Yes ___ No

F.2. Number of Significant Industrial Users (SIUs) and Categorical Industrial Users (CIUs). Provide the number of each of the following types of industrial users that discharge to the treatment works.

a. Number of non-categorical SIUs. 6

b. Number of CIUs. 1

SIGNIFICANT INDUSTRIAL USER INFORMATION:

Supply the following information for each SIU. If more than one SIU discharges to the treatment works, copy questions F.3 through F.8 and provide the information requested for each SIU.

F.3. Significant Industrial User Information. Provide the name and address of each SIU discharging to the treatment works. Submit additional pages as necessary.

Name: Gannett Publishing Services (Fairfax County pretreatment permit)

Mailing Address: 6885 Commercial Drive, Springfield, VA 22159

F.4. Industrial Processes. Describe all of the industrial processes that affect or contribute to the SIU's discharge.

Publish daily newspaper.

F.5. Principal Product(s) and Raw Material(s). Describe all of the principal processes and raw materials that affect or contribute to the SIU's discharge.

Principal product(s): Newspaper

Raw material(s): N/A

F.6. Flow Rate.

a. Process wastewater flow rate. Indicate the average daily volume of process wastewater discharged into the collection system in gallons per day (gpd) and whether the discharge is continuous or intermittent.

12,200 gpd (✓ continuous or ___ intermittent)

b. Non-process wastewater flow rate. Indicate the average daily volume of non-process wastewater flow discharged into the collection system in gallons per day (gpd) and whether the discharge is continuous or intermittent.

N/A gpd (___ continuous or ___ intermittent)

F.7. Pretreatment Standards. Indicate whether the SIU is subject to the following:

a. Local limits ✓ Yes ___ No

b. Categorical pretreatment standards ___ Yes ✓ No

If subject to categorical pretreatment standards, which category and subcategory?

N/A

FACILITY NAME AND PERMIT NUMBER:
Alexandria Renew Enterprises VA0025160

Form Approved 1/14/99
OMB Number 2040-0086

F.8. Problems at the Treatment Works Attributed to Waste Discharged by the SIU. Has the SIU caused or contributed to any problems (e.g., upsets, interference) at the treatment works in the past three years?

____Yes ✓ No If yes, describe each episode.

RCRA HAZARDOUS WASTE RECEIVED BY TRUCK, RAIL, OR DEDICATED PIPELINE:

F.9. RCRA Waste. Does the treatment works receive or has it in the past three years received RCRA hazardous waste by truck, rail, or dedicated pipe? ____Yes ✓ No (go to F.12.)

F.10. Waste Transport. Method by which RCRA waste is received (check all that apply):

_____Truck _____Rail _____Dedicated Pipe

F.11. Waste Description. Give EPA hazardous waste number and amount (volume or mass, specify units).

EPA Hazardous Waste Number	Amount	Units
N/A		

CERCLA (SUPERFUND) WASTEWATER, RCRA REMEDIATION/CORRECTIVE ACTION WASTEWATER, AND OTHER REMEDIAL ACTIVITY WASTEWATER:

F.12. Remediation Waste. Does the treatment works currently (or has it been notified that it will) receive waste from remedial activities?

____Yes (complete F.13 through F.15.) ✓ No

Provide a list of sites and the requested information (F.13 - F.15.) for each current and future site.

F.13. Waste Origin. Describe the site and type of facility at which the CERCLA/RCRA/or other remedial waste originates (or is expected to originate in the next five years).

N/A

F.14. Pollutants. List the hazardous constituents that are received (or are expected to be received). Include data on volume and concentration, if known. (Attach additional sheets if necessary).

N/A

F.15. Waste Treatment.

a. Is this waste treated (or will it be treated) prior to entering the treatment works?

____Yes ____No

If yes, describe the treatment (provide information about the removal efficiency):

N/A

b. Is the discharge (or will the discharge be) continuous or intermittent?

____Continuous ____Intermittent If intermittent, describe discharge schedule.

END OF PART F.
REFER TO THE APPLICATION OVERVIEW TO DETERMINE WHICH OTHER PARTS OF FORM 2A YOU MUST COMPLETE

FACILITY NAME AND PERMIT NUMBER:
Alexandria Renew Enterprises VA0025160

Form Approved 1/14/99
OMB Number 2040-0086

SUPPLEMENTAL APPLICATION INFORMATION

PART F. INDUSTRIAL USER DISCHARGES AND RCRA/CERCLA WASTES

All treatment works receiving discharges from significant industrial users or which receive RCRA, CERCLA, or other remedial wastes must complete Part F.

GENERAL INFORMATION:

F.1. Pretreatment Program. Does the treatment works have, or is it subject to, an approved pretreatment program?

✓ Yes ___ No

F.2. Number of Significant Industrial Users (SIUs) and Categorical Industrial Users (CIUs). Provide the number of each of the following types of industrial users that discharge to the treatment works.

a. Number of non-categorical SIUs. 6

b. Number of CIUs. 1

SIGNIFICANT INDUSTRIAL USER INFORMATION:

Supply the following information for each SIU. If more than one SIU discharges to the treatment works, copy questions F.3 through F.8 and provide the information requested for each SIU.

F.3. Significant Industrial User Information. Provide the name and address of each SIU discharging to the treatment works. Submit additional pages as necessary.

Name: Washington Post (Fairfax County pretreatment permit)

Mailing Address: 7171 Wimsatt Road, Springfield, VA 22151

F.4. Industrial Processes. Describe all of the industrial processes that affect or contribute to the SIU's discharge.

Publish daily newspaper.

F.5. Principal Product(s) and Raw Material(s). Describe all of the principal processes and raw materials that affect or contribute to the SIU's discharge.

Principal product(s): Newspaper

Raw material(s): N/A

F.6. Flow Rate.

a. Process wastewater flow rate. Indicate the average daily volume of process wastewater discharged into the collection system in gallons per day (gpd) and whether the discharge is continuous or intermittent.

12,000 gpd (___ continuous or ✓ intermittent)

b. Non-process wastewater flow rate. Indicate the average daily volume of non-process wastewater flow discharged into the collection system in gallons per day (gpd) and whether the discharge is continuous or intermittent.

N/A gpd (___ continuous or ___ intermittent)

F.7. Pretreatment Standards. Indicate whether the SIU is subject to the following:

a. Local limits ✓ Yes ___ No

b. Categorical pretreatment standards ___ Yes ✓ No

If subject to categorical pretreatment standards, which category and subcategory?

N/A

FACILITY NAME AND PERMIT NUMBER:
Alexandria Renew Enterprises VA0025160

Form Approved 1/14/99
OMB Number 2040-0086

F.8. Problems at the Treatment Works Attributed to Waste Discharged by the SIU. Has the SIU caused or contributed to any problems (e.g., upsets, interference) at the treatment works in the past three years?

____Yes ✓ No If yes, describe each episode.

RCRA HAZARDOUS WASTE RECEIVED BY TRUCK, RAIL, OR DEDICATED PIPELINE:

F.9. RCRA Waste. Does the treatment works receive or has it in the past three years received RCRA hazardous waste by truck, rail, or dedicated pipe? ____Yes ✓ No (go to F.12.)

F.10. Waste Transport. Method by which RCRA waste is received (check all that apply):

_____Truck _____Rail _____Dedicated Pipe

F.11. Waste Description. Give EPA hazardous waste number and amount (volume or mass, specify units).

EPA Hazardous Waste Number	Amount	Units
N/A		

CERCLA (SUPERFUND) WASTEWATER, RCRA REMEDIATION/CORRECTIVE ACTION WASTEWATER, AND OTHER REMEDIAL ACTIVITY WASTEWATER:

F.12. Remediation Waste. Does the treatment works currently (or has it been notified that it will) receive waste from remedial activities?

____Yes (complete F.13 through F.15.) ✓ No

Provide a list of sites and the requested information (F.13 - F.15.) for each current and future site.

F.13. Waste Origin. Describe the site and type of facility at which the CERCLA/RCRA/or other remedial waste originates (or is expected to originate in the next five years).

N/A

F.14. Pollutants. List the hazardous constituents that are received (or are expected to be received). Include data on volume and concentration, if known. (Attach additional sheets if necessary).

N/A

F.15. Waste Treatment.

a. Is this waste treated (or will it be treated) prior to entering the treatment works?

____Yes ____No

If yes, describe the treatment (provide information about the removal efficiency):

N/A

b. Is the discharge (or will the discharge be) continuous or intermittent?

____Continuous ____Intermittent If intermittent, describe discharge schedule.

END OF PART F.
REFER TO THE APPLICATION OVERVIEW TO DETERMINE WHICH OTHER PARTS OF FORM 2A YOU MUST COMPLETE

FACILITY NAME AND PERMIT NUMBER:
Alexandria Renew Enterprises VA0025160

Form Approved 1/14/99
OMB Number 2040-0086

SUPPLEMENTAL APPLICATION INFORMATION

PART F. INDUSTRIAL USER DISCHARGES AND RCRA/CERCLA WASTES

All treatment works receiving discharges from significant industrial users or which receive RCRA, CERCLA, or other remedial wastes must complete Part F.

GENERAL INFORMATION:

F.1. Pretreatment Program. Does the treatment works have, or is it subject to, an approved pretreatment program?

✓ Yes ___ No

F.2. Number of Significant Industrial Users (SIUs) and Categorical Industrial Users (CIUs). Provide the number of each of the following types of industrial users that discharge to the treatment works.

a. Number of non-categorical SIUs. 6

b. Number of CIUs. 1

SIGNIFICANT INDUSTRIAL USER INFORMATION:

Supply the following information for each SIU. If more than one SIU discharges to the treatment works, copy questions F.3 through F.8 and provide the information requested for each SIU.

F.3. Significant Industrial User Information. Provide the name and address of each SIU discharging to the treatment works. Submit additional pages as necessary.

Name: Alsco, Inc

Mailing Address: 720 South Pickett Street, Alexandria, VA 22304

F.4. Industrial Processes. Describe all of the industrial processes that affect or contribute to the SIU's discharge.

Linen & Uniform Service

F.5. Principal Product(s) and Raw Material(s). Describe all of the principal processes and raw materials that affect or contribute to the SIU's discharge.

Principal product(s): Laundry that provides linen and uniforms to restaurants, hotels and healthcare

Raw material(s): N/A

F.6. Flow Rate.

a. Process wastewater flow rate. Indicate the average daily volume of process wastewater discharged into the collection system in gallons per day (gpd) and whether the discharge is continuous or intermittent.

80,000 gpd (✓ continuous or ___ intermittent)

b. Non-process wastewater flow rate. Indicate the average daily volume of non-process wastewater flow discharged into the collection system in gallons per day (gpd) and whether the discharge is continuous or intermittent.

N/A gpd (___ continuous or ___ intermittent)

F.7. Pretreatment Standards. Indicate whether the SIU is subject to the following:

a. Local limits ✓ Yes ___ No

b. Categorical pretreatment standards ___ Yes ✓ No

If subject to categorical pretreatment standards, which category and subcategory?

N/A

F.8. Problems at the Treatment Works Attributed to Waste Discharged by the SIU. Has the SIU caused or contributed to any problems (e.g., upsets, interference) at the treatment works in the past three years?

____Yes ✓ No If yes, describe each episode.

RCRA HAZARDOUS WASTE RECEIVED BY TRUCK, RAIL, OR DEDICATED PIPELINE:

F.9. RCRA Waste. Does the treatment works receive or has it in the past three years received RCRA hazardous waste by truck, rail, or dedicated pipe? ____Yes ✓ No (go to F.12.)

F.10. Waste Transport. Method by which RCRA waste is received (check all that apply):

_____Truck _____Rail _____Dedicated Pipe

F.11. Waste Description. Give EPA hazardous waste number and amount (volume or mass, specify units).

EPA Hazardous Waste Number	Amount	Units
N/A		

CERCLA (SUPERFUND) WASTEWATER, RCRA REMEDIATION/CORRECTIVE ACTION WASTEWATER, AND OTHER REMEDIAL ACTIVITY WASTEWATER:

F.12. Remediation Waste. Does the treatment works currently (or has it been notified that it will) receive waste from remedial activities?

____Yes (complete F.13 through F.15.) ✓ No

Provide a list of sites and the requested information (F.13 - F.15.) for each current and future site.

F.13. Waste Origin. Describe the site and type of facility at which the CERCLA/RCRA/or other remedial waste originates (or is expected to originate in the next five years).

N/A

F.14. Pollutants. List the hazardous constituents that are received (or are expected to be received). Include data on volume and concentration, if known. (Attach additional sheets if necessary).

N/A

F.15. Waste Treatment.

a. Is this waste treated (or will it be treated) prior to entering the treatment works?

____Yes ____No

If yes, describe the treatment (provide information about the removal efficiency):

N/A

b. Is the discharge (or will the discharge be) continuous or intermittent?

____Continuous ____Intermittent If intermittent, describe discharge schedule.

END OF PART F.
REFER TO THE APPLICATION OVERVIEW TO DETERMINE WHICH OTHER PARTS OF FORM 2A YOU MUST COMPLETE

FACILITY NAME AND PERMIT NUMBER:
Alexandria Renew Enterprises VA0025160

Form Approved 1/14/99
OMB Number 2040-0086

SUPPLEMENTAL APPLICATION INFORMATION

PART F. INDUSTRIAL USER DISCHARGES AND RCRA/CERCLA WASTES

All treatment works receiving discharges from significant industrial users or which receive RCRA, CERCLA, or other remedial wastes must complete Part F.

GENERAL INFORMATION:

F.1. Pretreatment Program. Does the treatment works have, or is it subject to, an approved pretreatment program?

✓ Yes ___ No

F.2. Number of Significant Industrial Users (SIUs) and Categorical Industrial Users (CIUs). Provide the number of each of the following types of industrial users that discharge to the treatment works.

a. Number of non-categorical SIUs. 6

b. Number of CIUs. 1

SIGNIFICANT INDUSTRIAL USER INFORMATION:

Supply the following information for each SIU. If more than one SIU discharges to the treatment works, copy questions F.3 through F.8 and provide the information requested for each SIU.

F.3. Significant Industrial User Information. Provide the name and address of each SIU discharging to the treatment works. Submit additional pages as necessary.

Name: INOVA Alexandria Hospital

Mailing Address: 4320 Seminary Road, Alexandria, VA 22304

F.4. Industrial Processes. Describe all of the industrial processes that affect or contribute to the SIU's discharge.

339 bed surgical hospital

F.5. Principal Product(s) and Raw Material(s). Describe all of the principal processes and raw materials that affect or contribute to the SIU's discharge.

Principal product(s): N/A

Raw material(s): N/A

F.6. Flow Rate.

a. Process wastewater flow rate. Indicate the average daily volume of process wastewater discharged into the collection system in gallons per day (gpd) and whether the discharge is continuous or intermittent.

175,000 gpd (✓ continuous or ___ intermittent)

b. Non-process wastewater flow rate. Indicate the average daily volume of non-process wastewater flow discharged into the collection system in gallons per day (gpd) and whether the discharge is continuous or intermittent.

N/A gpd (___ continuous or ___ intermittent)

F.7. Pretreatment Standards. Indicate whether the SIU is subject to the following:

a. Local limits ✓ Yes ___ No

b. Categorical pretreatment standards ___ Yes ✓ No

If subject to categorical pretreatment standards, which category and subcategory?

N/A

F.8. Problems at the Treatment Works Attributed to Waste Discharged by the SIU. Has the SIU caused or contributed to any problems (e.g., upsets, interference) at the treatment works in the past three years?

____Yes ✓ No If yes, describe each episode.

RCRA HAZARDOUS WASTE RECEIVED BY TRUCK, RAIL, OR DEDICATED PIPELINE:

F.9. RCRA Waste. Does the treatment works receive or has it in the past three years received RCRA hazardous waste by truck, rail, or dedicated pipe? ____Yes ✓ No (go to F.12.)

F.10. Waste Transport. Method by which RCRA waste is received (check all that apply):

_____Truck _____Rail _____Dedicated Pipe

F.11. Waste Description. Give EPA hazardous waste number and amount (volume or mass, specify units).

EPA Hazardous Waste Number	Amount	Units
N/A		

CERCLA (SUPERFUND) WASTEWATER, RCRA REMEDIATION/CORRECTIVE ACTION WASTEWATER, AND OTHER REMEDIAL ACTIVITY WASTEWATER:

F.12. Remediation Waste. Does the treatment works currently (or has it been notified that it will) receive waste from remedial activities?

____Yes (complete F.13 through F.15.) ✓ No

Provide a list of sites and the requested information (F.13 - F.15.) for each current and future site.

F.13. Waste Origin. Describe the site and type of facility at which the CERCLA/RCRA/or other remedial waste originates (or is expected to originate in the next five years).

N/A

F.14. Pollutants. List the hazardous constituents that are received (or are expected to be received). Include data on volume and concentration, if known. (Attach additional sheets if necessary).

N/A

F.15. Waste Treatment.

a. Is this waste treated (or will it be treated) prior to entering the treatment works?

____Yes ____No

If yes, describe the treatment (provide information about the removal efficiency):

N/A

b. Is the discharge (or will the discharge be) continuous or intermittent?

____Continuous ____Intermittent If intermittent, describe discharge schedule.

END OF PART F.
REFER TO THE APPLICATION OVERVIEW TO DETERMINE WHICH OTHER PARTS OF FORM 2A YOU MUST COMPLETE

FACILITY NAME AND PERMIT NUMBER:
Alexandria Renew Enterprises VA0025160

Form Approved 1/14/99
OMB Number 2040-0086

SUPPLEMENTAL APPLICATION INFORMATION

PART F. INDUSTRIAL USER DISCHARGES AND RCRA/CERCLA WASTES

All treatment works receiving discharges from significant industrial users or which receive RCRA, CERCLA, or other remedial wastes must complete Part F.

GENERAL INFORMATION:

F.1. Pretreatment Program. Does the treatment works have, or is it subject to, an approved pretreatment program?

✓ Yes ___ No

F.2. Number of Significant Industrial Users (SIUs) and Categorical Industrial Users (CIUs). Provide the number of each of the following types of industrial users that discharge to the treatment works.

a. Number of non-categorical SIUs. 6

b. Number of CIUs. 1

SIGNIFICANT INDUSTRIAL USER INFORMATION:

Supply the following information for each SIU. If more than one SIU discharges to the treatment works, copy questions F.3 through F.8 and provide the information requested for each SIU.

F.3. Significant Industrial User Information. Provide the name and address of each SIU discharging to the treatment works. Submit additional pages as necessary.

Name: Covanta Alexandria/Arlington Inc.

Mailing Address: 5301 Eisenhower Avenue, Alexandria, VA 22304

F.4. Industrial Processes. Describe all of the industrial processes that affect or contribute to the SIU's discharge.

Waste to Energy Facility

F.5. Principal Product(s) and Raw Material(s). Describe all of the principal processes and raw materials that affect or contribute to the SIU's discharge.

Principal product(s): Electricity

Raw material(s): Solid Waste

F.6. Flow Rate.

a. Process wastewater flow rate. Indicate the average daily volume of process wastewater discharged into the collection system in gallons per day (gpd) and whether the discharge is continuous or intermittent.

65,000 gpd (✓ continuous or ___ intermittent)

b. Non-process wastewater flow rate. Indicate the average daily volume of non-process wastewater flow discharged into the collection system in gallons per day (gpd) and whether the discharge is continuous or intermittent.

N/A gpd (___ continuous or ___ intermittent)

F.7. Pretreatment Standards. Indicate whether the SIU is subject to the following:

a. Local limits ✓ Yes ___ No

b. Categorical pretreatment standards ___ Yes ✓ No

If subject to categorical pretreatment standards, which category and subcategory?

N/A

FACILITY NAME AND PERMIT NUMBER:
Alexandria Renew Enterprises VA0025160

Form Approved 1/14/99
OMB Number 2040-0086

F.8. Problems at the Treatment Works Attributed to Waste Discharged by the SIU. Has the SIU caused or contributed to any problems (e.g., upsets, interference) at the treatment works in the past three years?

____Yes ✓ No If yes, describe each episode.

RCRA HAZARDOUS WASTE RECEIVED BY TRUCK, RAIL, OR DEDICATED PIPELINE:

F.9. RCRA Waste. Does the treatment works receive or has it in the past three years received RCRA hazardous waste by truck, rail, or dedicated pipe? ____Yes ✓ No (go to F.12.)

F.10. Waste Transport. Method by which RCRA waste is received (check all that apply):

_____Truck _____Rail _____Dedicated Pipe

F.11. Waste Description. Give EPA hazardous waste number and amount (volume or mass, specify units).

EPA Hazardous Waste Number	Amount	Units
N/A		

CERCLA (SUPERFUND) WASTEWATER, RCRA REMEDIATION/CORRECTIVE ACTION WASTEWATER, AND OTHER REMEDIAL ACTIVITY WASTEWATER:

F.12. Remediation Waste. Does the treatment works currently (or has it been notified that it will) receive waste from remedial activities?

____Yes (complete F.13 through F.15.) ✓ No

Provide a list of sites and the requested information (F.13 - F.15.) for each current and future site.

F.13. Waste Origin. Describe the site and type of facility at which the CERCLA/RCRA/or other remedial waste originates (or is expected to originate in the next five years).

N/A

F.14. Pollutants. List the hazardous constituents that are received (or are expected to be received). Include data on volume and concentration, if known. (Attach additional sheets if necessary).

N/A

F.15. Waste Treatment.

a. Is this waste treated (or will it be treated) prior to entering the treatment works?

____Yes ____No

If yes, describe the treatment (provide information about the removal efficiency):

N/A

b. Is the discharge (or will the discharge be) continuous or intermittent?

____Continuous ____Intermittent If intermittent, describe discharge schedule.

END OF PART F.
REFER TO THE APPLICATION OVERVIEW TO DETERMINE WHICH OTHER PARTS OF FORM 2A YOU MUST COMPLETE

FACILITY NAME AND PERMIT NUMBER:
Alexandria Renew Enterprises VA0025160

Form Approved 1/14/99
OMB Number 2040-0086

SUPPLEMENTAL APPLICATION INFORMATION

PART G. COMBINED SEWER SYSTEMS

Note: City of Alexandria holds the CSO permit for the outfalls. AlexRenew plant receives combined sewer flows from the city.

If the treatment works has a combined sewer system, complete Part G.

G.1. System Map. Provide a map indicating the following: (may be included with Basic Application Information)

a. All CSO discharge points.

b. Sensitive use areas potentially affected by CSOs (e.g., beaches, drinking water supplies, shellfish beds, sensitive aquatic ecosystems, and outstanding natural resource waters). N/A

c. Waters that support threatened and endangered species potentially affected by CSOs. N/A

G.2. System Diagram. Provide a diagram, either in the map provided in G.1. or on a separate drawing, of the combined sewer collection system that includes the following information: See Attachment

a. Locations of major sewer trunk lines, both combined and separate sanitary.

b. Locations of points where separate sanitary sewers feed into the combined sewer system.

c. Locations of in-line and off-line storage structures.

d. Locations of flow-regulating devices.

e. Locations of pump stations.

CSO OUTFALLS:

Complete questions G.3 through G.6 once for each CSO discharge point.

G.3. Description of Outfall. ASA does not own outfalls and does not have requested data. See City of Alexandria Permit VA0087068.

a. Outfall number N/A

b. Location N/A
(City or town, if applicable) (Zip Code)

N/A
(County) (State)

N/A
(Latitude) (Longitude)

c. Distance from shore (if applicable) N/A ft.

d. Depth below surface (if applicable) N/A ft.

e. Which of the following were monitored during the last year for this CSO?

____Rainfall ____CSO pollutant concentrations ____CSO frequency

____CSO flow volume ____Receiving water quality

f. How many storm events were monitored during the last year? N/A

G.4. CSO Events.

a. Give the number of CSO events in the last year.
N/A _____ events (___ actual or ___ approx.)

b. Give the average duration per CSO event.
N/A _____ hours (____ actual or ____ approx.)

c. Give the average volume per CSO event.

N/A _____ million gallons (_____ actual or _____ approx.)

d. Give the minimum rainfall that caused a CSO event in the last year.

N/A _____ inches of rainfall

G.5. Description of Receiving Waters.

a. Name of receiving water: N/A

b. Name of watershed/river/stream system: N/A

United States Soil Conservation Service 14-digit watershed code (if known): N/A

c. Name of State Management/River Basin: N/A

United States Geological Survey 8-digit hydrologic cataloging unit code (if known): N/A

G.6. CSO Operations.

Describe any known water quality impacts on the receiving water caused by this CSO (e.g., permanent or intermittent beach closings, permanent or intermittent shell fish bed closings, fish kills, fish advisories, other recreational loss, or violation of any applicable State water quality standard).

N/A

END OF PART G.
REFER TO THE APPLICATION OVERVIEW TO DETERMINE WHICH OTHER PARTS OF FORM 2A YOU MUST COMPLETE.

Additional information, if provided, will appear on the following pages.

Alexandria Renew Enterprises

VPDES Permit Application

VA0025160

NPDES Form 2A Attachments

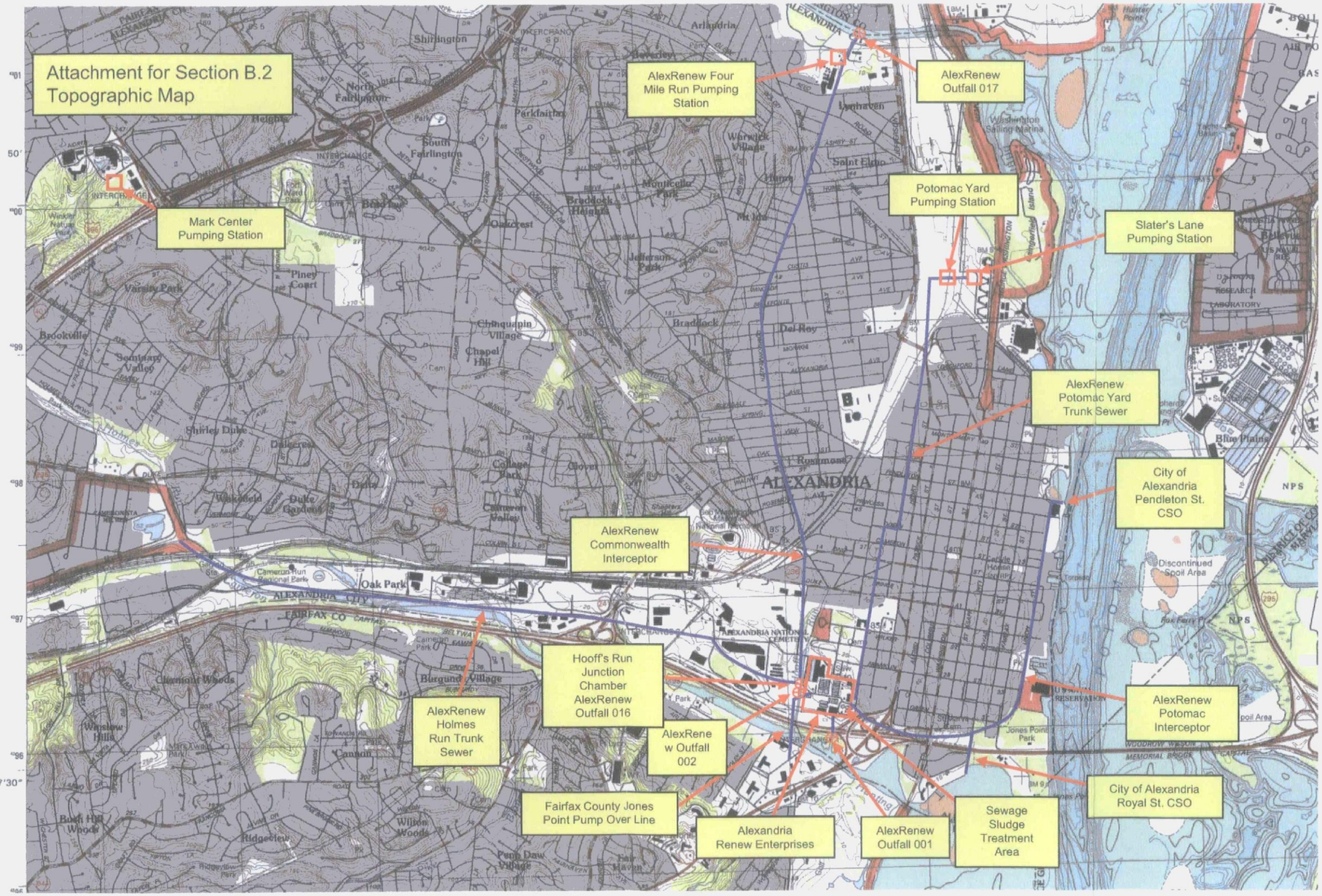
Attachment for Section B.2
Topographic Map
AlexRenew Four Mile Run Pumping Station
AlexRenew Outfall 017
Potomac Yard Pumping Station
Slater's Lane Pumping Station
Mark Center Pumping Station
AlexRenew Potomac Yard Trunk Sewer
City of Alexandria Pendleton St. CSO
AlexRenew Commonwealth Interceptor
Hooff's Run Junction Chamber AlexRenew Outfall 016
AlexRenew Holmes Run Trunk Sewer
AlexRenew Outfall 002
AlexRenew Potomac Interceptor
City of Alexandria Royal St. CSO
Fairfax County Jones Point Pump Over Line
Alexandria Renew Enterprises
AlexRenew Outfall 001
Sewage Sludge Treatment Area
ALEXANDRIA
47'30"

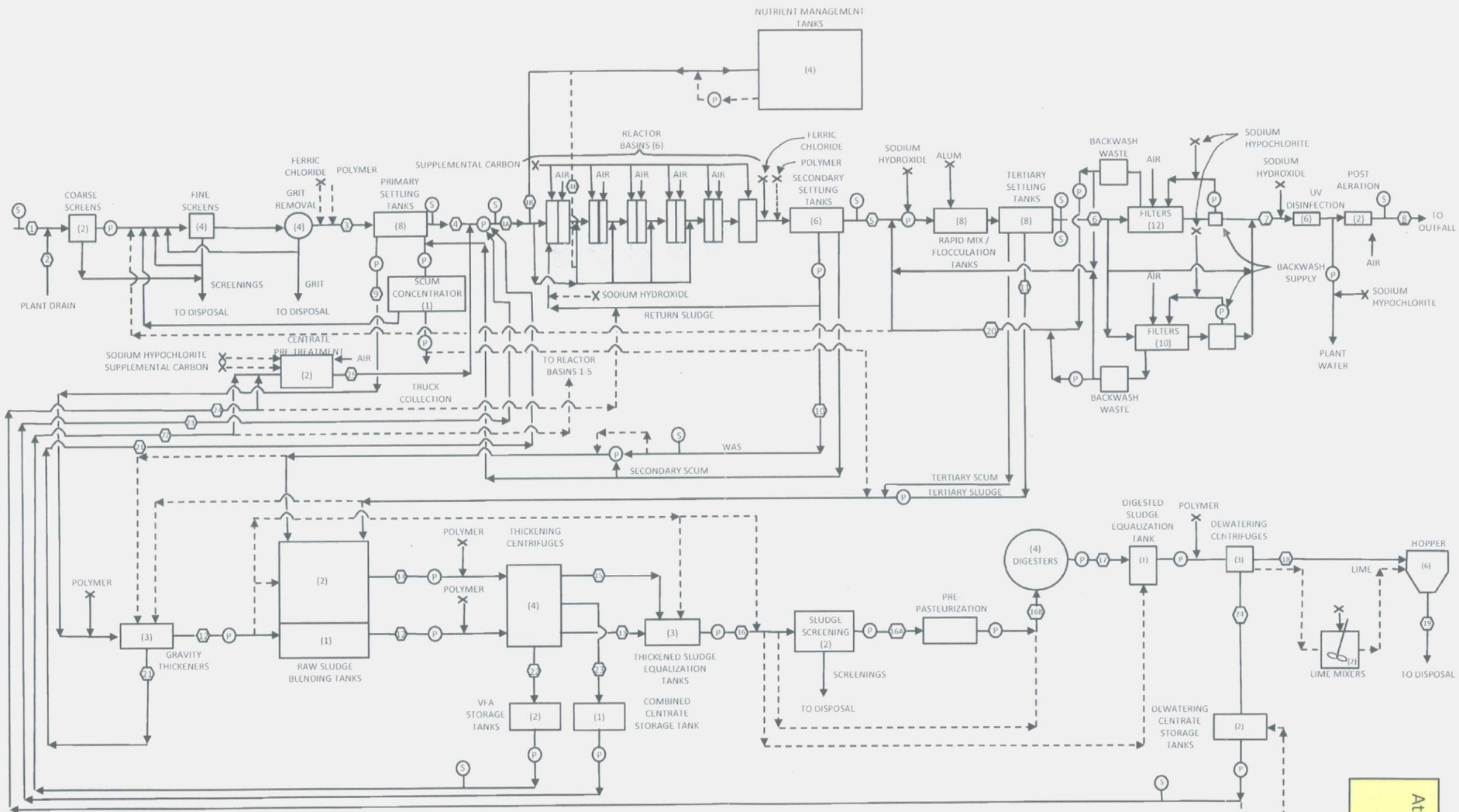

PROCESS FLOW STREAM IDENTIFICATION NUMBER

MAIN PROCESS FLOW STREAMS

1. RAW SEWAGE
2. PLANT DRAIN
3. PRIMARY INFLUENT
4. PRIMARY EFFLUENT
4A. BIOLOGICAL REACTOR BASIN INFLUENT
4B. PRIMARY EFFLUENT TO NMTs OR FROM NMTs TO BRBs
5. SECONDARY EFFLUENT
6. TERTIARY EFFLUENT
7. FILTER EFFLUENT
8. PLANT EFFLUENT

SOLIDS PROCESS FLOW STREAMS

9. PRIMARY SLUDGE
10. WASTE ACTIVATED SLUDGE
11. TERTIARY SLUDGE
12. GRAVITY THICKENED SLUDGE
13. CENTRIFUGE THICKENED PRIMARY SLUDGE
14. BLENDED SLUDGE
15. BLENDED THICKENED SLUDGE
16. DIGESTER FEED SLUDGE
16A. THICKENED SCREENED SLUDGE
16B. PASTEURIZED SLUDGE
17. DIGESTED SLUDGE
18. DEWATERED SLUDGE
19. BIOSOLIDS TO LANDFILL

RECYCLE FLOW STREAMS

20. FILTER BACKWASH
21. GRAVITY THICKENER OVERFLOW
22. VFA RECYCLE
23. THICKENING CENTRATE
24. DEWATERING CENTRATE
25. CENTRATE PRETREATMENT EFFLUENT

LEGEND

- PROCESS FLOW STREAM (X=IDENTIFICATION NUMBER)
- PRIMARY CHEMICAL ADDITION POINTS
- ALTERNATIVE CHEMICAL ADDITION POINT
- ALTERNATIVE PLANT STREAM RECYCLE
- PUMPING SYSTEM
- AUTOMATIC COMPOSITE SAMPLER
- FACILITIES (X=NO. OF UNITS)

Attachment for Section B.3
Process Flow Diagram A
Step Feed Mode

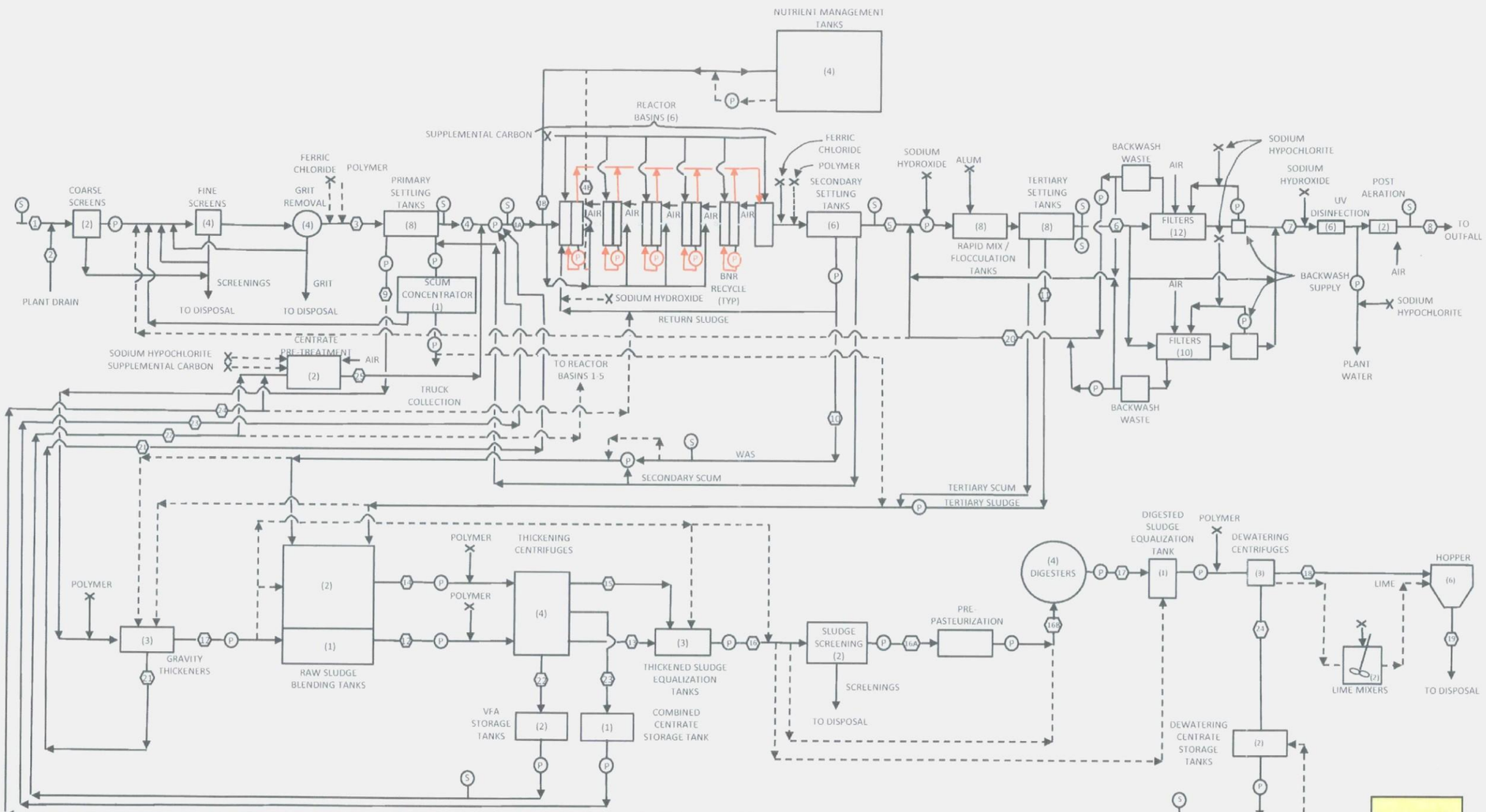

PROCESS FLOW STREAM IDENTIFICATION NUMBER

MAIN PROCESS FLOW STREAMS

1. RAW SEWAGE
2. PLANT DRAIN
3. PRIMARY INFLUENT
4. PRIMARY EFFLUENT
4A. BIOLOGICAL REACTOR BASIN INFLUENT
4B. PRIMARY EFFLUENT TO NMTs OR FROM NMTs TO BRBs
5. SECONDARY EFFLUENT
6. TERTIARY EFFLUENT
7. FILTER EFFLUENT
8. PLANT EFFLUENT

SOLIDS PROCESS FLOW STREAMS

9. PRIMARY SLUDGE
10. WASTE ACTIVATED SLUDGE
11. TERTIARY SLUDGE
12. GRAVITY THICKENED SLUDGE
13. CENTRIFUGE THICKENED PRIMARY SLUDGE
14. BLENDED SLUDGE
15. BLENDED THICKENED SLUDGE
16. DIGESTER FEED SLUDGE
16A. THICKENED SCREENED SLUDGE
16B. PASTEURIZED SLUDGE
17. DIGESTED SLUDGE
18. DEWATERED SLUDGE
19. BIOSOLIDS TO LANDFILL

RECYCLE FLOW STREAMS

20. FILTER BACKWASH
21. GRAVITY THICKENER OVERFLOW
22. VFA RECYCLE
23. THICKENING CENTRATE
24. DEWATERING CENTRATE
25. CENTRATE PRETREATMENT EFFLUENT

LEGEND

- PROCESS FLOW STREAM (X=IDENTIFICATION NUMBER)
- PRIMARY CHEMICAL ADDITION POINTS
- ALTERNATIVE CHEMICAL ADDITION POINT
- ALTERNATIVE PLANT STREAM RECYCLE
- PUMPING SYSTEM
- AUTOMATIC COMPOSITE SAMPLER
- FACILITIES (X=NO. OF UNITS)

Attachment for Section B.3
Process Flow Diagram B
MLE Mode

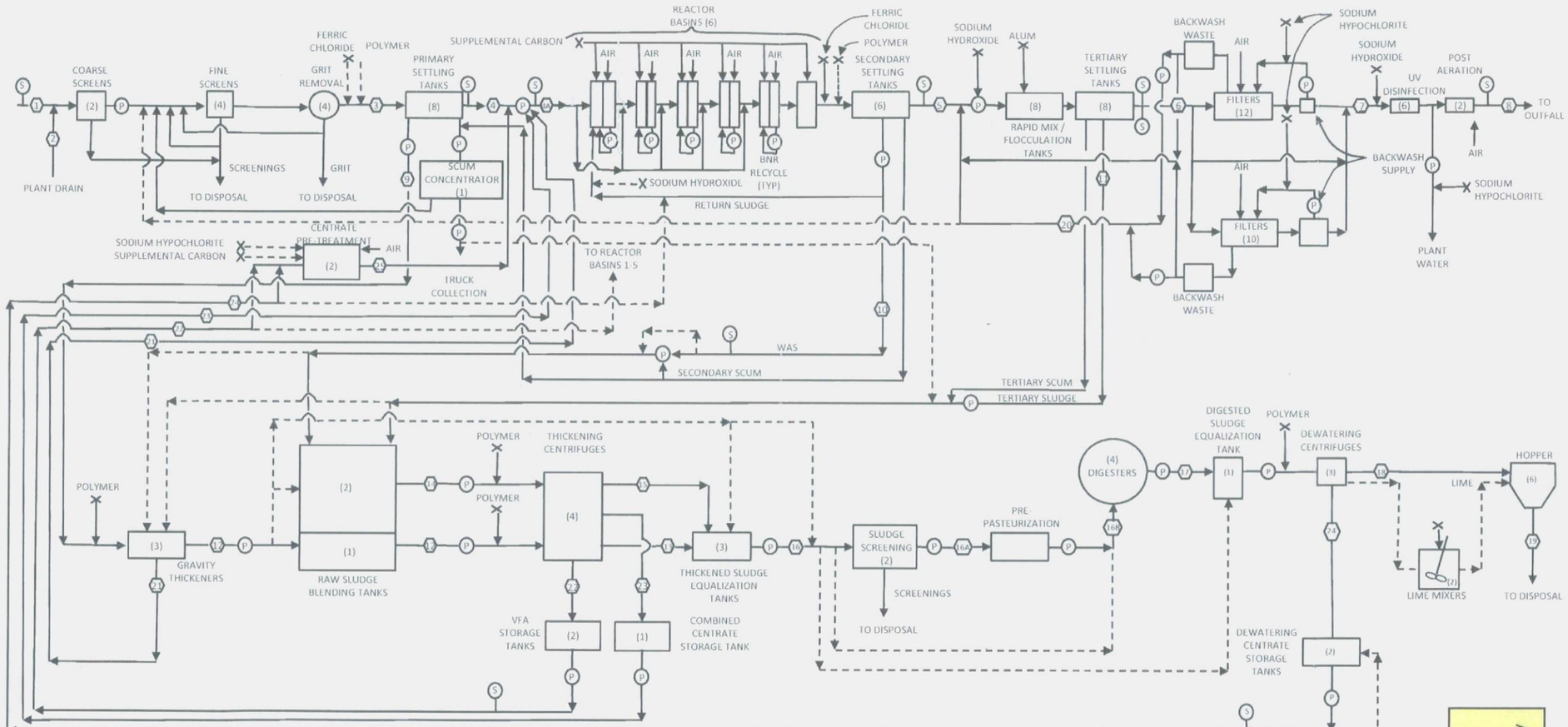

PROCESS FLOW STREAM IDENTIFICATION NUMBER

MAIN PROCESS FLOW STREAMS

1. RAW SEWAGE
2. PLANT DRAIN
3. PRIMARY INFLUENT
4. PRIMARY EFFLUENT
4A. BIOLOGICAL REACTOR BASIN INFLUENT
4B. PRIMARY EFFLUENT TO NMTs OR FROM NMTs TO BRBs
5. SECONDARY EFFLUENT
6. TERTIARY EFFLUENT
7. FILTER EFFLUENT
8. PLANT EFFLUENT

SOLIDS PROCESS FLOW STREAMS

9. PRIMARY SLUDGE
10. WASTE ACTIVATED SLUDGE
11. TERTIARY SLUDGE
12. GRAVITY THICKENED SLUDGE
13. CENTRIFUGE THICKENED PRIMARY SLUDGE
14. BLENDED SLUDGE
15. BLENDED THICKENED SLUDGE
16. DIGESTER FEED SLUDGE
16A. THICKENED SCREENED SLUDGE
16B. PASTEURIZED SLUDGE
17. DIGESTED SLUDGE
18. DEWATERED SLUDGE
19. BIOSOLIDS TO LANDFILL

RECYCLE FLOW STREAMS

20. FILTER BACKWASH
21. GRAVITY THICKENER OVERFLOW
22. VFA RECYCLE
23. THICKENING CENTRATE
24. DEWATERING CENTRATE
25. CENTRATE PRETREATMENT EFFLUENT

LEGEND

- PROCESS FLOW STREAM (X=IDENTIFICATION NUMBER)
- PRIMARY CHEMICAL ADDITION POINTS
- ALTERNATIVE CHEMICAL ADDITION POINT
- ALTERNATIVE PLANT STREAM RECYCLE
- PUMPING SYSTEM
- AUTOMATIC COMPOSITE SAMPLER
- FACILITIES (X=NO. OF UNITS)

Attachment for Section B.3
Process Flow Diagram C
NMF Bypass Mode

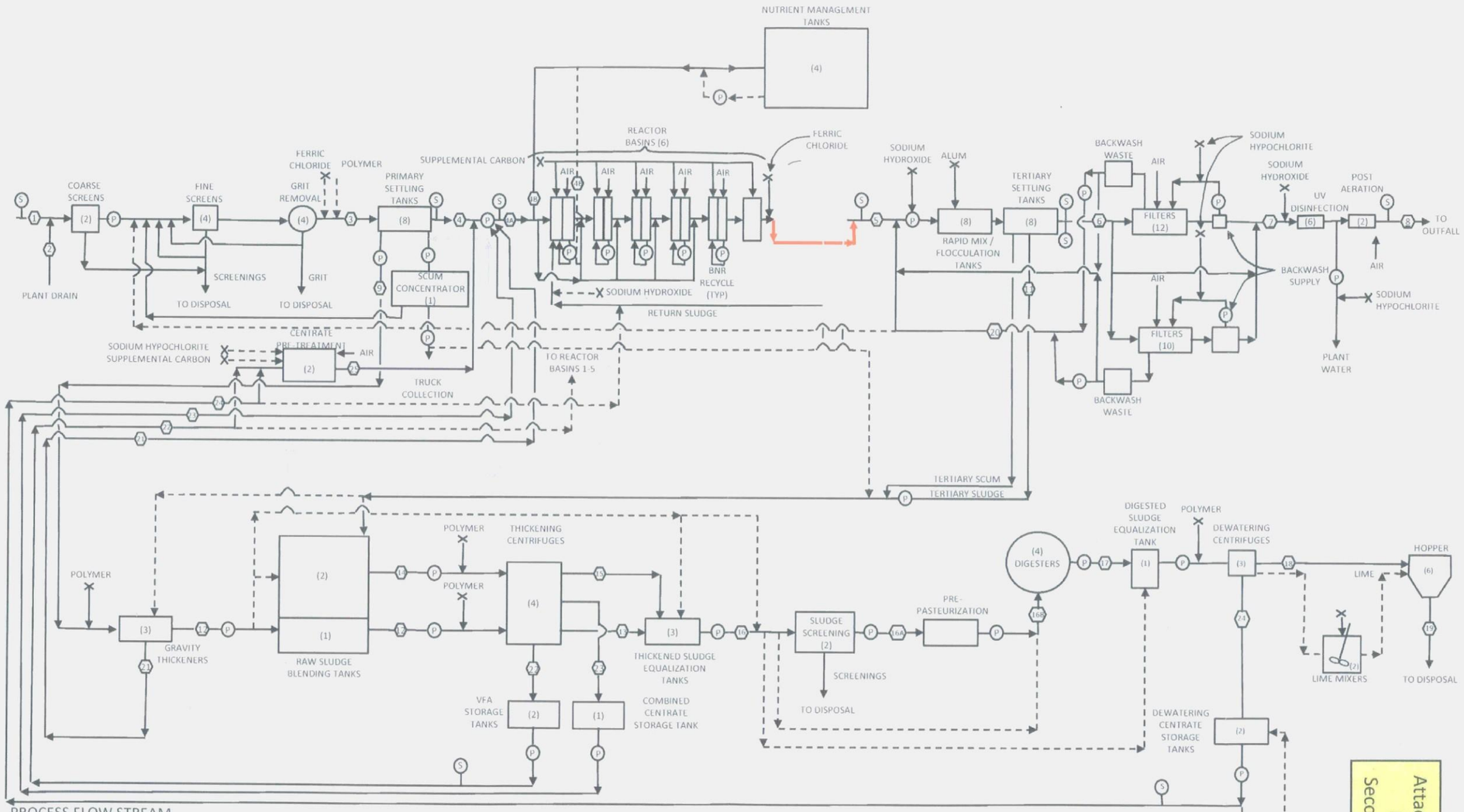

PROCESS FLOW STREAM IDENTIFICATION NUMBER

MAIN PROCESS FLOW STREAMS

1. RAW SEWAGE
2. PLANT DRAIN
3. PRIMARY INFLUENT
4. PRIMARY EFFLUENT
4A. BIOLOGICAL REACTOR BASIN INFLUENT
4B. PRIMARY EFFLUENT TO NMTs OR FROM NMTs TO BRBs
5. SECONDARY EFFLUENT
6. TERTIARY EFFLUENT
7. FILTER EFFLUENT
8. PLANT EFFLUENT

SOLIDS PROCESS FLOW STREAMS

9. PRIMARY SLUDGE
10. WASTE ACTIVATED SLUDGE
11. TERTIARY SLUDGE
12. GRAVITY THICKENED SLUDGE
13. CENTRIFUGE THICKENED PRIMARY SLUDGE
14. BLENDED SLUDGE
15. BLENDED THICKENED SLUDGE
16. DIGESTER FEED SLUDGE
16A. THICKENED SCREENED SLUDGE
16B. PASTEURIZED SLUDGE
17. DIGESTED SLUDGE
18. DEWATERED SLUDGE
19. BIOSOLIDS TO LANDFILL

RECYCLE FLOW STREAMS

20. FILTER BACKWASH
21. GRAVITY THICKENER OVERFLOW
22. VFA RECYCLE
23. THICKENING CENTRATE
24. DEWATERING CENTRATE
25. CENTRATE PRETREATMENT EFFLUENT

LEGEND

- PROCESS FLOW STREAM (X=IDENTIFICATION NUMBER)
- PRIMARY CHEMICAL ADDITION POINTS
- ALTERNATIVE CHEMICAL ADDITION POINT
- ALTERNATIVE PLANT STREAM RECYCLE
- PUMPING SYSTEM
- AUTOMATIC COMPOSITE SAMPLER
- FACILITIES (X=NO. OF UNITS)

Attachment for Section B.3
Process Flow Diagram D
Secondary Settling Tanks Bypass

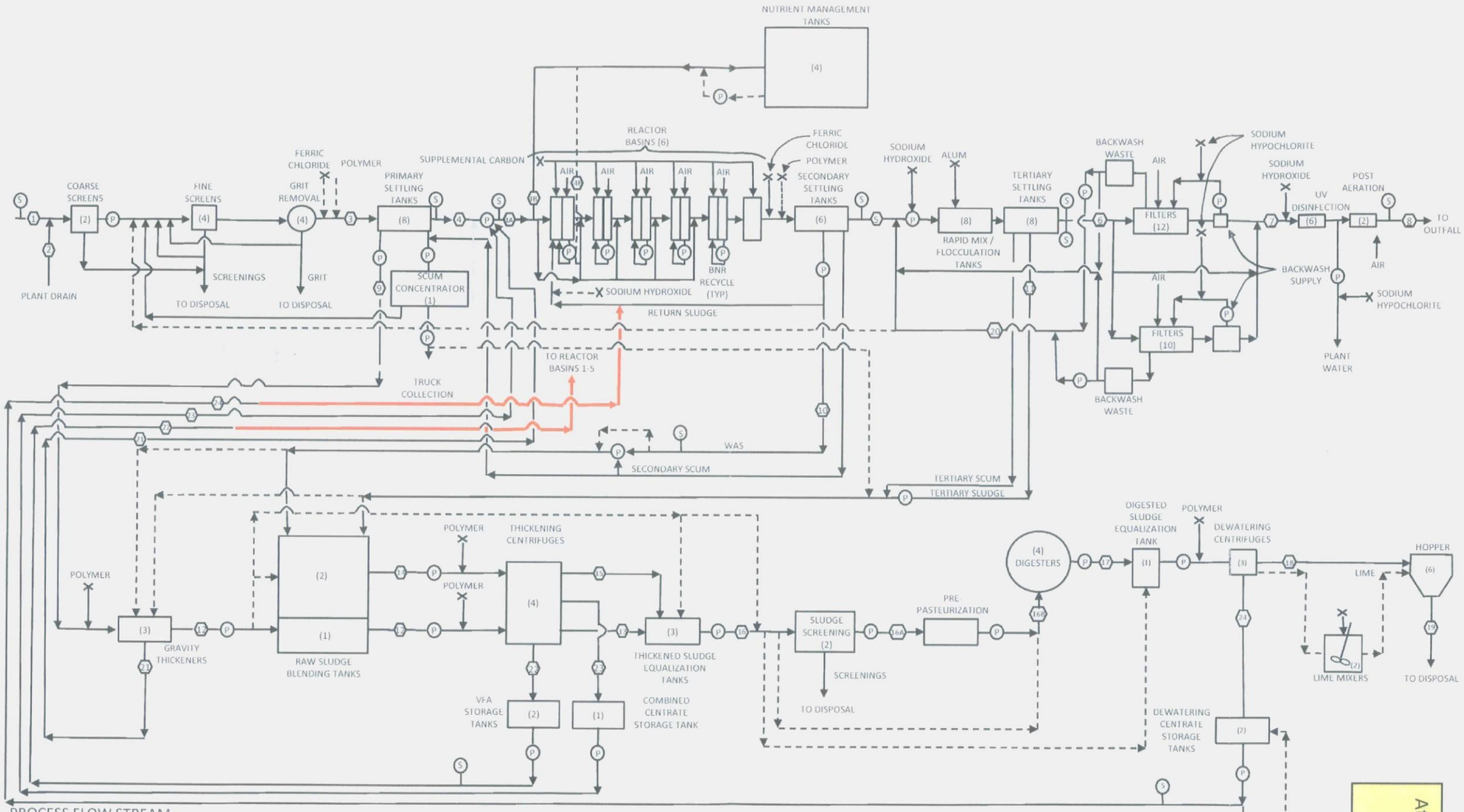

PROCESS FLOW STREAM IDENTIFICATION NUMBER

MAIN PROCESS FLOW STREAMS

1. RAW SEWAGE
2. PLANT DRAIN
3. PRIMARY INFLUENT
4. PRIMARY EFFLUENT
4A. BIOLOGICAL REACTOR BASIN INFLUENT
4B. PRIMARY EFFLUENT TO NMTs OR FROM NMTs TO BRBs
5. SECONDARY EFFLUENT
6. TERTIARY EFFLUENT
7. FILTER EFFLUENT
8. PLANT EFFLUENT

SOLIDS PROCESS FLOW STREAMS

9. PRIMARY SLUDGE
10. WASTE ACTIVATED SLUDGE
11. TERTIARY SLUDGE
12. GRAVITY THICKENED SLUDGE
13. CENTRIFUGE THICKENED PRIMARY SLUDGE
14. BLENDED SLUDGE
15. BLENDED THICKENED SLUDGE
16. DIGESTER FEED SLUDGE
16A. THICKENED SCREENED SLUDGE
16B. PASTEURIZED SLUDGE
17. DIGESTED SLUDGE
18. DEWATERED SLUDGE
19. BIOSOLIDS TO LANDFILL

RECYCLE FLOW STREAMS

20. FILTER BACKWASH
21. GRAVITY THICKENER OVERFLOW
22. VFA RECYCLE
23. THICKENING CENTRATE
24. DEWATERING CENTRATE
25. CENTRATE PRETREATMENT EFFLUENT

LEGEND

- PROCESS FLOW STREAM (X=IDENTIFICATION NUMBER)
- PRIMARY CHEMICAL ADDITION POINTS
- ALTERNATIVE CHEMICAL ADDITION POINT
- PUMPING SYSTEM
- AUTOMATIC COMPOSITE SAMPLER
- FACILITIES (X=NO. OF UNITS)

Attachment for Section B.3
Process Flow Diagram E
CPT Bypass

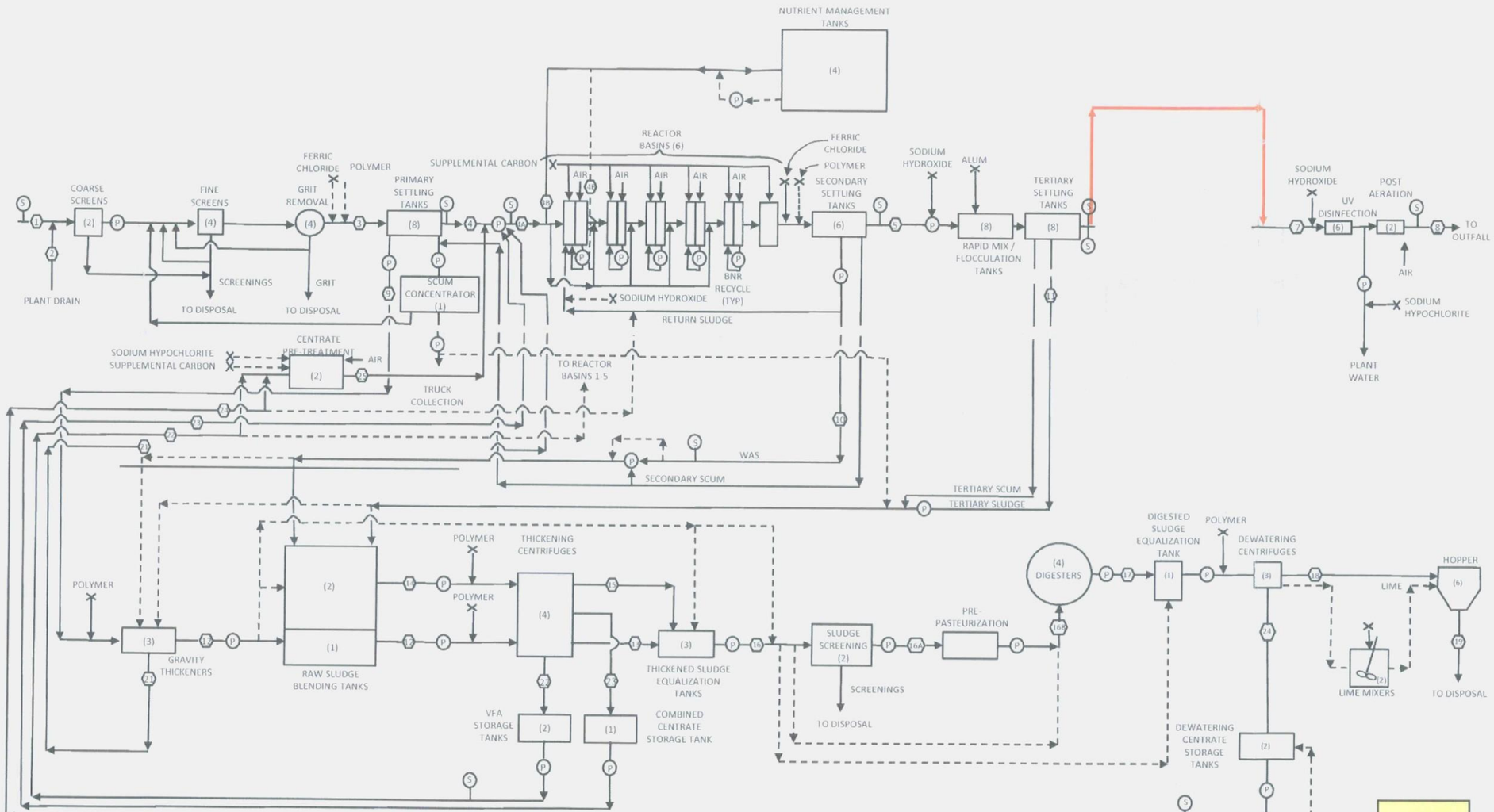

PROCESS FLOW STREAM IDENTIFICATION NUMBER

MAIN PROCESS FLOW STREAMS

1. RAW SEWAGE
2. PLANT DRAIN
3. PRIMARY INFLUENT
4. PRIMARY EFFLUENT
4A. BIOLOGICAL REACTOR BASIN INFLUENT
4B. PRIMARY EFFLUENT TO NMTs OR FROM NMTs TO BRBs
5. SECONDARY EFFLUENT
6. TERTIARY EFFLUENT
7. FILTER EFFLUENT
8. PLANT EFFLUENT

SOLIDS PROCESS FLOW STREAMS

9. PRIMARY SLUDGE
10. WASTE ACTIVATED SLUDGE
11. TERTIARY SLUDGE
12. GRAVITY THICKENED SLUDGE
13. CENTRIFUGE THICKENED PRIMARY SLUDGE
14. BLENDED SLUDGE
15. BLENDED THICKENED SLUDGE
16. DIGESTER FEED SLUDGE
16A. THICKENED SCREENED SLUDGE
16B. PASTEURIZED SLUDGE
17. DIGESTED SLUDGE
18. DEWATERED SLUDGE
19. BIOSOLIDS TO LANDFILL

RECYCLE FLOW STREAMS

20. FILTER BACKWASH
21. GRAVITY THICKENER OVERFLOW
22. VFA RECYCLE
23. THICKENING CENTRATE
24. DEWATERING CENTRATE
25. CENTRATE PRETREATMENT EFFLUENT

LEGEND

- PROCESS FLOW STREAM (X=IDENTIFICATION NUMBER)
- PRIMARY CHEMICAL ADDITION POINTS
- ALTERNATIVE CHEMICAL ADDITION POINT
- PUMPING SYSTEM
- AUTOMATIC COMPOSITE SAMPLER
- FACILITIES (X=NO. OF UNITS)

Attachment for Section B.3
Process Flow Diagram F
Filter Bypass

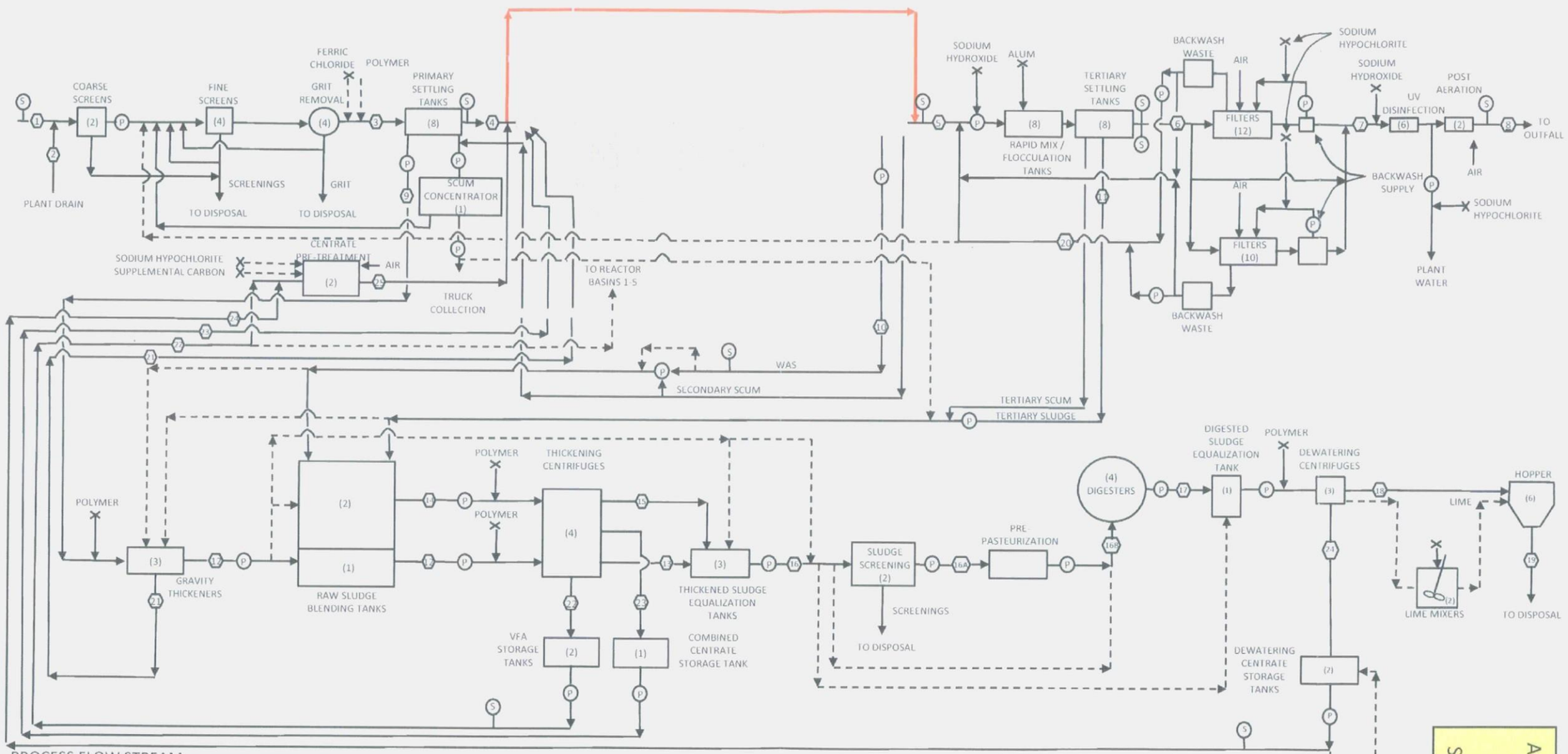

PROCESS FLOW STREAM IDENTIFICATION NUMBER

MAIN PROCESS FLOW STREAMS

1. RAW SEWAGE
2. PLANT DRAIN
3. PRIMARY INFLUENT
4. PRIMARY EFFLUENT
4A. BIOLOGICAL REACTOR BASIN INFLUENT
4B. PRIMARY EFFLUENT TO NMTs OR FROM NMTs TO BRBs
5. SECONDARY EFFLUENT
6. TERTIARY EFFLUENT
7. FILTER EFFLUENT
8. PLANT EFFLUENT

SOLIDS PROCESS FLOW STREAMS

9. PRIMARY SLUDGE
10. WASTE ACTIVATED SLUDGE
11. TERTIARY SLUDGE
12. GRAVITY THICKENED SLUDGE
13. CENTRIFUGE THICKENED PRIMARY SLUDGE
14. BLENDED SLUDGE
15. BLENDED THICKENED SLUDGE
16. DIGESTER FEED SLUDGE
16A. THICKENED SCREENED SLUDGE
16B. PASTEURIZED SLUDGE
17. DIGESTED SLUDGE
18. DEWATERED SLUDGE
19. BIOSOLIDS TO LANDFILL

RECYCLE FLOW STREAMS

20. FILTER BACKWASH
21. GRAVITY THICKENER OVERFLOW
22. VFA RECYCLE
23. THICKENING CENTRATE
24. DEWATERING CENTRATE
25. CENTRATE PRETREATMENT EFFLUENT

LEGEND

- PROCESS FLOW STREAM (X=IDENTIFICATION NUMBER)
- PRIMARY CHEMICAL ADDITION POINTS
- ALTERNATIVE CHEMICAL ADDITION POINT
- ALTERNATIVE PLANT STREAM RECYCLE
- PUMPING SYSTEM
- AUTOMATIC COMPOSITE SAMPLER
- FACILITIES (X=NO. OF UNITS)

Attachment for Section B.3
Process Flow Diagram G
Wet Weather Treatment –
Secondary Treatment Bypass

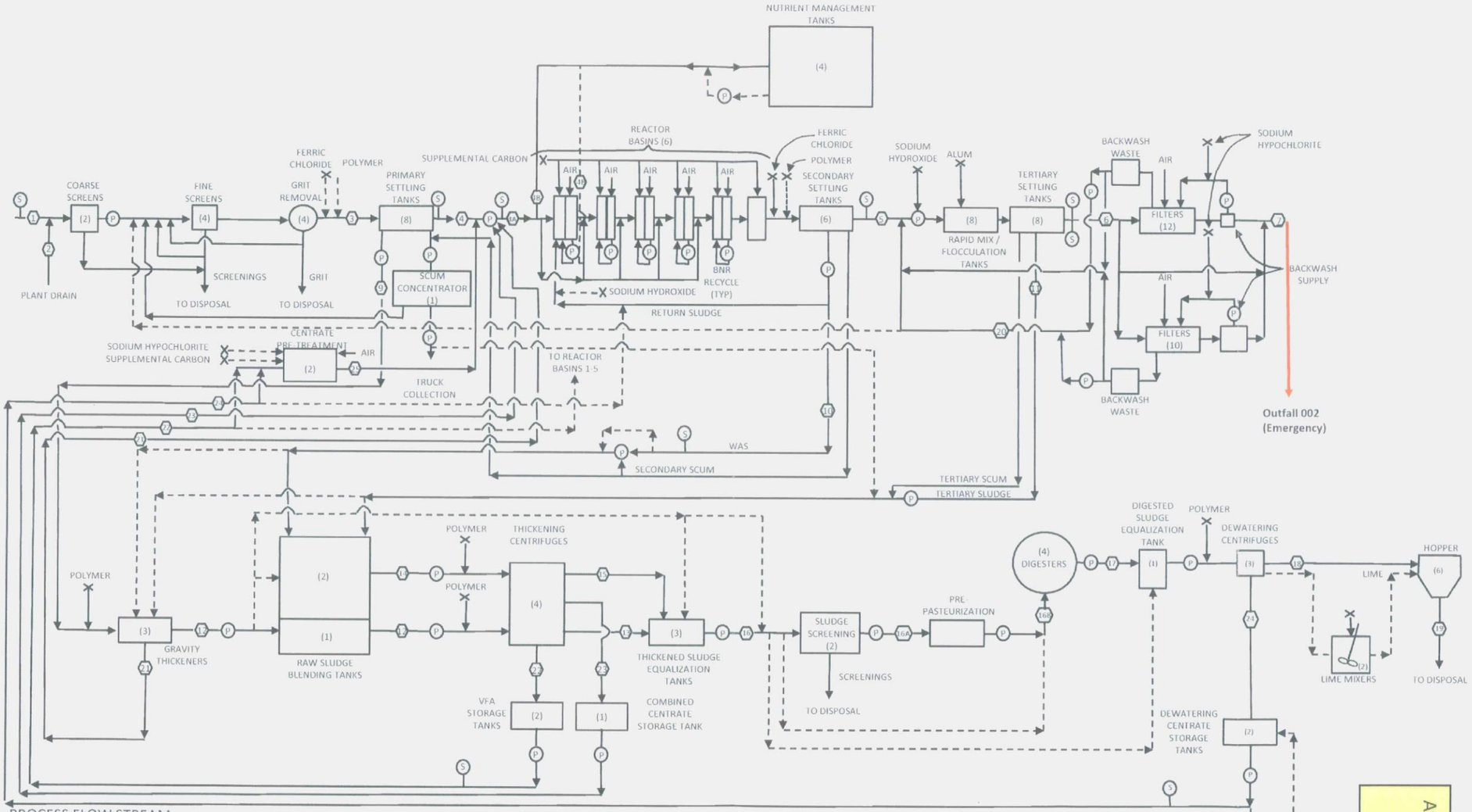

PROCESS FLOW STREAM IDENTIFICATION NUMBER

MAIN PROCESS FLOW STREAMS

1. RAW SEWAGE
2. PLANT DRAIN
3. PRIMARY INFLUENT
4. PRIMARY EFFLUENT
4A. BIOLOGICAL REACTOR BASIN INFLUENT
4B. PRIMARY EFFLUENT TO NMTs OR FROM NMTs TO BRBs
5. SECONDARY EFFLUENT
6. TERTIARY EFFLUENT
7. FILTER EFFLUENT
8. PLANT EFFLUENT

SOLIDS PROCESS FLOW STREAMS

9. PRIMARY SLUDGE
10. WASTE ACTIVATED SLUDGE
11. TERTIARY SLUDGE
12. GRAVITY THICKENED SLUDGE
13. CENTRIFUGE THICKENED PRIMARY SLUDGE
14. BLENDED SLUDGE
15. BLENDED THICKENED SLUDGE
16. DIGESTER FEED SLUDGE
16A. THICKENED SCREENED SLUDGE
16B. PASTEURIZED SLUDGE
17. DIGESTED SLUDGE
18. DEWATERED SLUDGE
19. BIOSOLIDS TO LANDFILL

RECYCLE FLOW STREAMS

20. FILTER BACKWASH
21. GRAVITY THICKENER OVERFLOW
22. VFA RECYCLE
23. THICKENING CENTRATE
24. DEWATERING CENTRATE
25. CENTRATE PRETREATMENT EFFLUENT

LEGEND

- PROCESS FLOW STREAM (X=IDENTIFICATION NUMBER)
- PRIMARY CHEMICAL ADDITION POINTS
- ALTERNATIVE CHEMICAL ADDITION POINT
- ALTERNATIVE PLANT STREAM RECYCLE
- PUMPING SYSTEM
- AUTOMATIC COMPOSITE SAMPLER
- FACILITIES (X=NO. OF UNITS)

Attachment for Section B.3
Process Flow Diagram H
Disinfection Bypass

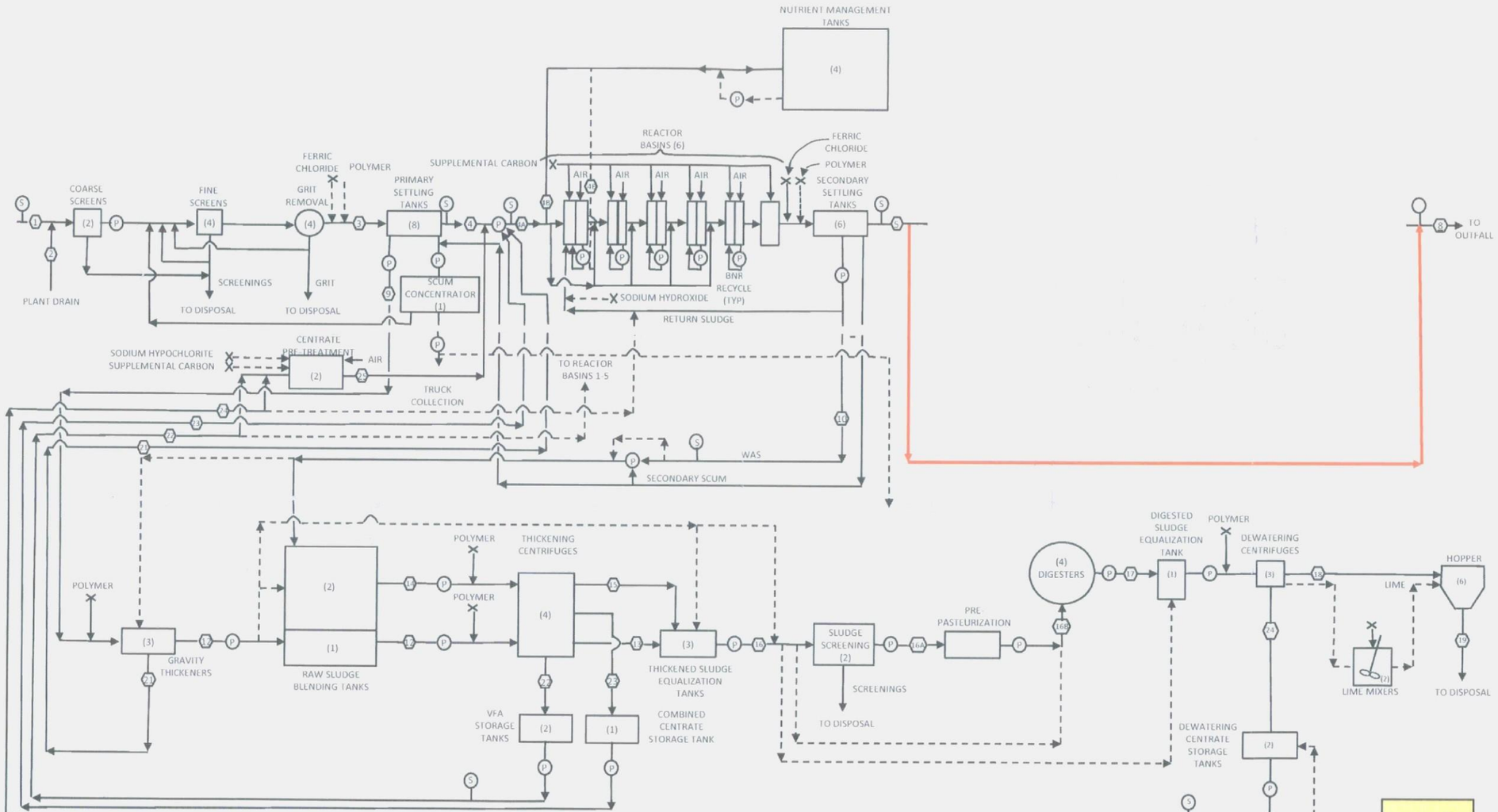

PROCESS FLOW STREAM IDENTIFICATION NUMBER

MAIN PROCESS FLOW STREAMS

1. RAW SEWAGE
2. PLANT DRAIN
3. PRIMARY INFLUENT
4. PRIMARY EFFLUENT
4A. BIOLOGICAL REACTOR BASIN INFLUENT
4B. PRIMARY EFFLUENT TO NMTs OR FROM NMTs TO BRBs
5. SECONDARY EFFLUENT
6. TERTIARY EFFLUENT
7. FILTER EFFLUENT
8. PLANT EFFLUENT

SOLIDS PROCESS FLOW STREAMS

9. PRIMARY SLUDGE
10. WASTE ACTIVATED SLUDGE
11. TERTIARY SLUDGE
12. GRAVITY THICKENED SLUDGE
13. CENTRIFUGE THICKENED PRIMARY SLUDGE
14. BLENDED SLUDGE
15. BLENDED THICKENED SLUDGE
16. DIGESTER FEED SLUDGE
16A. THICKENED SCREENED SLUDGE
16B. PASTEURIZED SLUDGE
17. DIGESTED SLUDGE
18. DEWATERED SLUDGE
19. BIOSOLIDS TO LANDFILL

RECYCLE FLOW STREAMS

20. FILTER BACKWASH
21. GRAVITY THICKENER OVERFLOW
22. VFA RECYCLE
23. THICKENING CENTRATE
24. DEWATERING CENTRATE
25. CENTRATE PRETREATMENT EFFLUENT

LEGEND

- PROCESS FLOW STREAM (X=IDENTIFICATION NUMBER)
- PRIMARY CHEMICAL ADDITION POINTS
- ALTERNATIVE CHEMICAL ADDITION POINT
- PUMPING SYSTEM
- AUTOMATIC COMPOSITE SAMPLER
- FACILITIES (X=NO. OF UNITS)

Attachment for Section B.3
Process Flow Diagram I
Tertiary Treatment Bypass

Attachment for Section B.3
Water Balance

	FLOW STREAM IDENTIFICATION	NOTES	ANNUAL AVERAGE					MAXIMUM 30-DAY				
			FLOW	BOD5		TSS		FLOW	BOD5		TSS	
	LIQUIDS PROCESS STREAMS	1	MGD	LB/DAY	mg/L	LB/DAY	mg/L	MGD	LB/DAY	mg/L	LB/DAY	mg/L
1	RAW SEWAGE		54.0	84,600	188	110,000	244	70.0	110,000	188	154,000	264
2	PLANT DRAIN	2	-	-	-	-	-	-	-	-	-	-
3	PRIMARY INFLUENT		54.0	84,600	188	110,000	244	70.0	110,000	188	154,000	264
4	PRIMARY EFFLUENT		50.1	35,900	86	38,500	92	66.0	43,200	78	53,900	98
4A	BIOLOGICAL REACTOR BASIN INFLUENT		55.5	41,900	91	49,000	106	71.8	50,700	85	68,200	114
5	SECONDARY EFFLUENT	3	54.8	1,700	4	3,700	8	71.1	2,100	4	4,700	8
6	TERTIARY EFFLUENT	3	56.9	800	2	2,900	6	72.9	900	1	3,700	6
7	FILTER EFFLUENT	3	54.0	600	1	400	1	70.0	600	1	400	1
8	PLANT EFFLUENT	3	54.0	600	1	400	1	70.0	600	1	400	1
	SOLIDS PROCESS STREAMS						% Solids					% Solids
9	PRIMARY SLUDGE		3.93	-	-	82,000	0.3	4.00	-	-	113,500	0.3
10	WASTE ACTIVATED SLUDGE		0.68	-	-	34,300	0.6	0.72	-	-	44,600	0.7
11	TERTIARY SLUDGE		0.79	-	-	13,200	0.2	1.11	-	-	18,500	0.2
12	GRAVITY THICKENED SLUDGE		0.26	-	-	87,600	4.0	0.36	-	-	121,500	4.0
13	CENTRIFUGE THICKENED PRIMARY SLUDGE		0.10	-	-	47,300	6.0	0.13	-	-	62,410	6.0
14	BLENDED SLUDGE		0.68	-	-	34,300	0.6	0.72	-	-	44,600	0.7
15	BLENDED THICKENED SLUDGE		0.03	-	-	32,600	12.0	0.04	-	-	42,300	12.0
16	DIGESTER FEED SLUDGE		0.29	-	-	120,200	4.9	0.41	-	-	163,800	4.8
16A	THICKENED SCREENED SLUDGE		0.29	-	-	120,200	4.9	0.41	-	-	163,800	4.8
16B	PASTEURIZED SLUDGE		0.29	-	-	120,200	4.9	0.41	-	-	163,800	4.8
17	DIGESTED SLUDGE		0.29	-	-	64,800	2.6	0.35	-	-	87,600	3.0
18	DEWATERED SLUDGE		0.03	-	-	61,500	29.0	0.03	-	-	83,200	29.0
19	BIOSOLIDS TO LANDFILL		0.03	-	-	61,500	29.0	0.03	-	-	83,200	29.0
	RECYCLE FLOW STREAMS											
20	FILTER BACKWASH		2.91	200	10	2,500	101	2.91	300	12	3,300	137
21	GRAVITY THICKENER OVERFLOW		4.46	4,900	132	7,600	205	4.75	6,100	153	10,600	267
22	VFA RECYCLE		0.07	2,400	3,800	5,300	8,500	0.10	3,200	3,800	6,900	8,400
23	THICKENING CENTRATE		0.65	500	98	1,700	315	0.68	700	128	2,200	392
24	DEWATERING CENTRATE		0.27	700	324	3,400	1,496	0.32	1,100	415	3,900	1,487
25	CENTRATE PRE-TREATMENT EFFLUENT		0.27	600	254	1,200	531	0.32	1,000	367	4,400	1,651

GENERAL SHEET NOTES

1. FLOW STREAM IDENTIFICATION NUMBER CORRESPOND TO THOSE SHOWN ON DWG G-22.
2. PLANT DRAIN FLOW AND LOADINGS ASSUMED TO BE NEGLIGIBLE
3. EFFLUENT QUALITY ASSUMED FOR MASS BALANCE CALCULATIONS AND MAY NOT REPRESENT ACTUAL PEFORMANCE.

Alexandria Renew Enterprises
VA0025160
Attachment for Section B.3 – On Site Chemicals

AlexRenew Process Chemical Storage

Chemical	Location[1]	Maximum Storage	Spill Prevention
Aluminum Sulfate Receiving	Basement of Building L, Solids Processing Building	Two Receiving Tanks Tank Capacity – 6,000 gal. Maximum Storage – 12,000 gal.	**Receiving tanks inside spill containment area. The containment area is sized to hold 1.5 times the volume of one tank. The containment area is equipped with an air operated diaphragm spill pump. Spills are manually pumped to the plant influent or returned to storage. Alarm provided for spill detection.**
Aluminum Sulfate Storage	Basement of Building G2, Advanced Treatment Building	Five Storage Tanks Tank Capacity - 13,600 gal. Maximum Storage - 68,000 gal.	**Storage tanks inside spill containment area. The containment area is sized to hold 1.5 times the volume of one tank. The containment area is equipped with an air operated diaphragm spill pump. Spills are manually pumped to the plant influent. Alarm provided for spill detection.**
Ferric Chloride Storage	Basement of Building L, Solids Processing Building	Four Storage Tanks Tank Capacity – 15,500 gal. Maximum Storage – 62,000 gal.	**Storage tanks inside spill containment area. The containment area is sized to hold 1.5 times the volume of one tank. The containment area is equipped with an air operated diaphragm spill pump. Spills are manually pumped to the plant influent. Alarm provided for spill detection.**
Ferric Chloride Day Tanks	Basement of Building G2, Advanced Treatment Building	Three Day Tanks Tank Capacity – 6,000 gal. Maximum Storage – 18,000 gal.	**Day tanks inside spill containment area. The containment area is sized to hold 1.5 times the volume of one tank. The containment area is equipped with an air operated diaphragm spill pump. Spills are manually pumped to the plant influent. Alarm provided for spill detection.**
Lime, Dry	Building L, Solids Processing Building	Two Storage Tanks Tank Capacity – 3,700 cu. ft. Approximately 260,000 lbs. Maximum Storage – 7,400 cu. ft. Approximately 520,000 lbs.	**The storage Tank area drains return to the plant influent.**
Methanol	Adjacent to BNR and Secondary Settling	Two Storage Tanks Tank Capacity – 24,500 gal. Maximum Storage – 49,000 gal.	**Storage tanks inside spill containment area. The containment area is equipped with an air operated diaphragm spill pump. Spills are manually pumped to the plant influent or returned to storage. Alarm provided for spill detection.**
Polymer, Dry	Building L, Solids Processing Building	Maximum Storage – 30,000 lbs.	**Mix units curbed with drains returning to the plant influent.**
Sodium Hydroxide	Basement of Building L, Solids Processing Building	Two Storage Tanks Tank Capacity – 11,500 gal. Maximum Storage – 23,000 gal.	**Storage tanks inside spill containment area. The containment area is sized to hold 1.5 times the volume of one tank. The containment area is equipped with an air operated diaphragm spill pump. Spills are manually pumped to the plant influent or returned to storage. Alarm provided for spill detection.**
Sodium Hypochlorite	Basement of Building L, Solids Processing Building	Two Storage Tanks Tank Capacity – 13,500 gal. Maximum Storage – 27,000 gal.	**Storage tanks inside spill containment area. The containment area is sized to hold 1.5 times the volume of one tank. The containment area is equipped with an air operated diaphragm spill pump. Spills are manually pumped to the plant influent or returned to storage. Alarm provided for spill detection.**
Sulfuric Acid	Basement of Building L, Solids Processing Building	Two Storage Tanks Tank Capacity – 3,000 gal. Maximum Storage – 6,000 gal.	**Storage tanks inside spill containment area. The containment area is sized to hold 1.5 times the volume of one tank. The containment area is equipped with an air operated diaphragm spill pump. Spills are manually pumped to the plant influent or returned to storage. Alarm provided for spill detection.**

1 – See attached Site Plan for specific storage location.

Alexandria Renew Enterprises
VA0025160
Attachment for Section B.3 – On Site Chemicals

Ferric Chloride Day Tanks
Capacity – 18,000 gal.

Aluminum Sulfate Storage
Capacity – 68,000 gal.

Methanol (and other supplemental carbons) Storage Capacity – 49,000 gal.

Dry Polymer Storage
Capacity – 30,000 lbs.

Aluminum Sulfate Receiving
Capacity – 12,000 gal.

Ferric Chloride Storage
Capacity – 62,000 gal.
(Alternate – 31,000 Ferric Chloride and 31,000 Supplemental Carbon)

Sodium Hydroxide Storage
Capacity – 23,000 gal.
(Alternate – 11,500 Sodium Hydroxide and 11,500 Supplemental Carbon)

Sodium Hypochlorite Storage
Capacity – 27,000 gal.

Sulfuric Acid Storage
Capacity – 6,000 gal.
(Empty and Not Used)

Dry Lime Storage
Capacity – 7,400 cu. ft.
(Empty and Not Used)

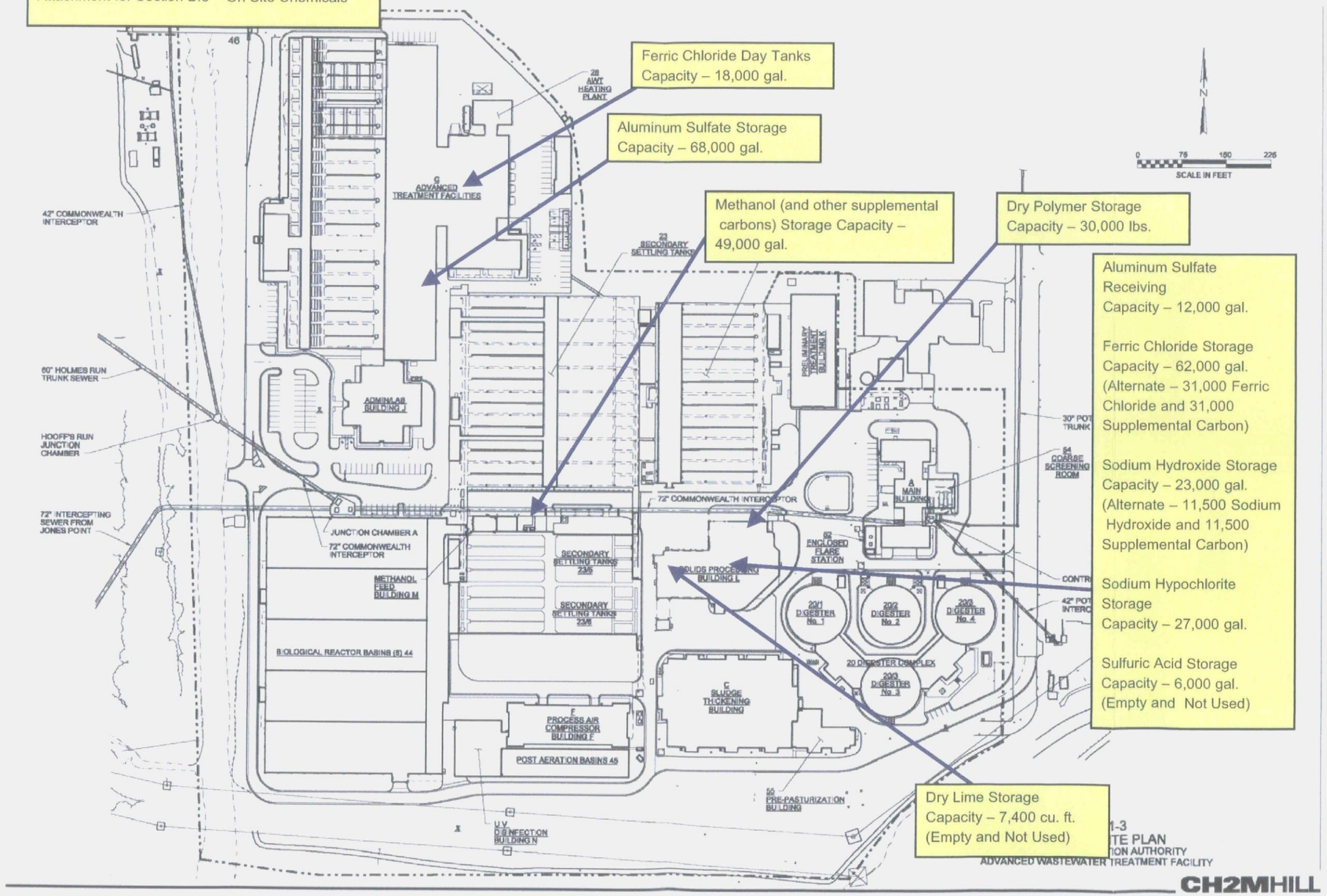

Attachment for Section B.3

Process Narrative Description

Overview of Liquid Treatment Processes

Preliminary/Primary Treatment

Coarse Screening

The raw sewage entering the plant first goes through coarse screens to remove large trash that may clog or damage the raw sewage pumps. The system consists of two 6-ft wide climber screens with 3-inch openings. The trash is disposed in dumpsters.

Raw Sewage Pumping

The raw sewage pump station consists of six pumps with a total peak capacity of 130 MGD with all pumps in service. The pump station has a capacity of 115 MGD with one pump out of service. The pump station discharges through two 60-inch pressure headers to the influent channel in Preliminary Treatment Building K.

Fine Screening

The fine screening system consists of four belt-type rotating screens with ¼ inch openings. The screenings are washed, compacted and moved by screw conveyors to a truck loading bay for disposal.

Grit Removal

The grit removal system consists of four vortex chambers that settle the heavy inorganic solids to the bottom of the inner chamber. The grit is pumped out of the inner chamber with recessed impeller pumps and discharged to a grit cyclone and classifier. The grit is washed and dewatered and then moved by screw conveyors to a truck loading bay for disposal.

Primary Treatment

The primary treatment system consists of eight primary settling tanks where the smaller solids settle to the bottom by gravity and are pumped out as sludge. Grease, oils and other floating solids rise to the surface of the tanks and are removed by a skimming mechanism. The clear water goes over weirs at the end of the tanks and is pumped to the Biological Reactor Basins (BRBs).

An alternate wet weather treatment includes bypassing excess flow around the Secondary Treatment system to preserve solids in the system (Process Flow Diagram G). This flow receives full Tertiary Treatment and UV disinfection.

An alternate treatment bypasses the Secondary Settling Tanks after Biological Nitrogen Removal. This flow receives full Tertiary Treatment and UV disinfection (Process Flow Diagram D).

Secondary Treatment

Primary Effluent Pumping

The primary effluent pump station consists of six pumps. The pump station was designed to pump 120 MGD with one pump out of service and 70 MGD with three pumps and one wet well or one header out of service. The pump station discharges through two 48-inch pressure headers to the BRB operating gallery where the flow is split into each one of the reactor basins.

Biological Nitrogen Removal (BNR)

The BNR system consists of five biological reactor basins (BRBs) and six secondary settling Each BRB has a volume of 4 million gallons and is divided into anoxic and aerobic zones. The aerobic zones, which are aerated by fine bubble air diffusers, grow micro-organisms that transform ammonia nitrogen to nitrate. The anoxic zones grow micro-organisms that transform the nitrate to nitrogen gas, which is released into the atmosphere. The system has the flexibility to be operated either in parallel (MLE) (Process Flow Diagram B) or in series (step-feed) modes (Process Flow Diagram A). Methanol can also be added to aid the micro-organisms in converting the nitrogen compounds and increase the nitrogen removal.

A Nutrient Management Facility (estimated to be on-line April 2015) with a capacity of 18 MGD can be used to receive primary effluent flows during peak ammonia loadings, then return this flow during periods of low ammonia loading to optimize the BNR performance. This facility can also be bypassed (Process Flow Diagram C)

After the biological reactor basins, the mixed liquor flows into six secondary settling tanks. The secondary settling tanks are rectangular tanks, about 12 feet deep. These tanks allow the micro-organisms to settle by gravity. The settling process is aided by adding ferric chloride and/or polymer, which also helps remove phosphorous from the water. The solids, which are rich in micro-organisms, are removed from the bottom of the settling tanks and returned to the biological reactor basins. A portion of the solids is diverted to the solids handling system as waste activated sludge (WAS).

Tertiary Treatment

Intermediate Pumping

The intermediate pump station consists of 6 pumps with a design pumping capacity of 130 MGD with 4 pumps in service. The pump station discharges through two 72-inch headers to the tertiary settling tanks.

In the event of an intermediate pump station failure, an Emergency Overflow directs flow to Outfall 001 (Process Flow Diagram I).

Tertiary Settling

The tertiary settling process consists of eight tanks. Each tank is sub-divided into a rapid mix tank, a flocculation tank and plate settling tank. The flow first enters the rapid mix tank where a coagulant (normally alum or alternatively, ferric chloride) is added to the water and thoroughly mixed. The flow then passes through the flocculation tank where gentle mixing is provided to allow the suspended solids in the water to form a cluster or floc. In the final tank, the flow passes through inclined plate settlers, where

the flocs settle by gravity thus removing suspended solids and phosphorous from the water.

Filtration

The filtration system consists of twenty two sand gravity filters. Plant flow is split between the filters and solids are removed from the water as it passes through the fine filter media. The flow through the filter is controlled by an effluent valve. The filters are equipped with a backwashing and air scouring system that periodically removes the particles accumulated in the filter media and recycles this flow to the intermediate pump station.

An alternate wet weather treatment includes excess flow bypassing filtration. This flow receives UV disinfection (Process Flow Diagram F).

In an emergency, filter effluent can be discharged through Outfall 002 (Process Flow Diagram H).

Final Treatment

UV Disinfection

The UV disinfection system consists of six parallel channels, each with a treatment capacity of 23 MGD. Each channel contains two banks of low-pressure low-intensity UV lamps. The UV light inactivates the various pathogens found in the water as it passes through the lamp banks.

Post-Aeration

The post-aeration system consists of two long rectangular channels with fine bubble diffusers along the bottom. Air can be introduced through these diffusers to increase the dissolved oxygen concentration in the water prior to discharge to Hunting Creek.

Overview of Solids Handling Processes

Sludge Thickening

Gravity Thickening

The gravity thickening system consists of five circular tanks with sloped cone bottoms. Primary and tertiary sludge are pumped to these tanks and thickened by allowing the solids to settle by gravity to the bottom. The thickened sludge is then pumped out of the bottom of the cone to the thickened sludge equalization tanks. The clarified water at the surface of the tank overflows a weir and is drained by gravity to the primary effluent pump station.

Mechanical Thickening

The mechanical thickening system consists of four thickening centrifuge trains. The waste activated sludge is stored in the raw sludge blending tanks and from there it is pumped to each of the four thickening centrifuges. The centrifuges spin the sludge at high velocities, causing the heavier solids to travel to the outside of the bowl and the clarified water, or centrate, to remain in the center. Polymer is added to the sludge to aid the liquid/solid separation process. The solids are then discharged to the thickened sludge equalization tanks where they are blended with the gravity-thickened sludge and

pumped to the pre-pasteurization facility. The centrate flows to the combined centrate storage tanks and is then pumped to the primary effluent pump station.

Sludge Digestion

Pre-Pasteurization

The sludge pre-pasteurization system reduces the pathogens in the sludge by heating it. The blended thickened sludge passes through two sludge screening presses to remove any fibrous materials that can damage other equipment. The sludge is then pumped through heat exchangers where it is heated to a temperature of 158 °F. The hot sludge is held in a heated sludge holding tank at the target temperature for at least 30 minutes. The sludge is then cooled and sent to the digesters.

Digestion

The digestion system consists of four anaerobic digesters. The digesters reduce the pathogenic organisms, reduce the mass of solids for disposal and produce methane gas which can be utilized for mixing and for fuel. The sludge is pumped to the digesters and is continuously recirculated for heating and mixing. The sludge must be maintained at a temperature of 95°F for mesophilic anaerobic digestion. After digestion the sludge is pumped to the digested sludge equalization tank. The digester gas is withdrawn from the top of the tanks and returned to the digesters for mixing. Excess gas is utilized for operation of the steam boilers or burned in the waste gas flares.

Sludge Dewatering and Disposal

Centrifuge Dewatering

The centrifuge dewatering process consists of three dewatering centrifuge trains. The purpose of this process is to convert the digested sludge, which has a solids concentration of 3 to 10 percent (3 to 10% TS) into a dewatered sludge cake with a solids concentration of 30 percent (30% TS) and above. The digested sludge is pumped from the digested sludge equalization tank to the dewatering centrifuge. The centrifuges spin the sludge at high velocities, causing the heavier solids to travel to the outside of the bowl and the clarified water, or centrate, to remain in the center. Polymer is added to the sludge to aid the liquid/solid separation process.

The high-strength ammonia centrate is further treated in the Centrate Pretreatment (CPT) facility to reduce nitrogen loading to the BNR system. The CPT facility can be bypassed, with can stored in the dewatering centrate tanks and pumped to the biological reactor basins (Process Flow Diagram E).

Biosolids Storage and Handling

The biosolids storage and handling system consists of a lime stabilization system and six biosolids storage silos. The biosolids are discharged from the centrifuge into the biosolids silos and from there, loaded into trucks for land application or other beneficial reuse. The lime stabilization system can be used to provide additional treatment if required.

Odor Control and Process Chemicals

Odor Control

Odorous air is collected from various sources throughout the plant with one main goal: to provide centralized treatment of plant odors. Odorous air is conveyed using above ground and buried collection ductwork to the Solids Processing Building for treatment. Three odor control treatment systems in the building provide removal of particulates and odors:

- Particulate scrubbers (2) - for removal of particulates from lime mixers and dewatering centrifuge offgases
- Acid scrubber (1) - for removal of ammonia from various solids processing odorous air streams
- Packed tower scrubbers (4 two-stage treatment trains) – for removal of reduced sulfides and organics from all odorous air streams

P articulate scrubbers are used remove particulate matter in select odorous air-streams in the Solids Processing Building (offgases from the lime mixers and the dewatering centrifuges) . Removal of the particulates helps to prevent fouling of downstream odor control ductwork and equipment. The particulate scrubbers use water and fixed blades to make particles fall out of the air stream and into a sump. A continuous overflow provides removal of particulates from the sump.

An acid scrubber is used to remove ammonia odors from the particulate scrubber exhausts, as well as other potentially ammonia-laden odorous air streams in the Solids Processing Building. The acid scrubber fan pulls odorous air through the acid scrubber media, where it comes into contact with a scrubbant solution containing dilute sulfuric acid. The ammonia reacts with the scrubbant solution and is absorbed into the liquid - accumulating in the sump at the bottom of the scrubber. A continuous overflow provides removal of the absorbed ammonia.

Packed tower scrubber systems are used to remove hydrogen sulfide and ammonia from all odorous air streams, including the acid scrubber exhaust. Four odor scrubber fans pull odorous air into four treatment trains. Each treatment train has two scrubbers in series, providing a first and second stage of treatment. As the odorous air passes through the scrubber media, chemicals in the scrubbant solution react with the odorous compound and absorb the m into the liquid phase. The fans then exhaust the treated air through air stacks on the roof of the Solids Handling Building. Several modes of operation are provided for each scrubber to enhance removal of odors and provide flexibility.

Process Chemicals

The AlexRenew plant uses several chemicals in the liquids and solids treatment processes and for process support. The main chemical unloading and storage facility for all plant chemicals is located in the Solids Handling Building L. In addition, the plant has a supplemental carbon storage facility (Building M) and chemical day tanks in the Advanced Wastewater Treatment (AWT) Facility (G).

Attachment for Section B.3

Power Distribution

Electrical power is supplied to the plant from the local power utility (Dominion-Virginia Power) at 34.5 kv to four (4) utility transformers. The transformers, designated as T-1A, T-1B, T-2A and T-2B, are located adjacent to the Process Air Compressor Building (Building F or PAC).

The overall power distribution of the Electrical System is monitored by the SCADA system at the individual workstations using Power Data Monitors (PDM).

System Diagram

An overall plant electrical site plan is shown in Figure 63-1. One-line diagrams of the Plant Electrical System are shown in Figure 63-2 and Figure 63-3. Figure 63-2 contains the system fed from Switchgear SS-1 which includes the Pre-pasteurization Building (Building 55), UV Disinfection Building (Building N), Building F, Sludge Thickening Building (Building C), Digester Complex (Building 20) and part of the Solids Processing Building (Building L or SPB). Figure 63-3 contains the system fed from Switchgear SS-2 which includes the Advanced Wastewater Treatment Facilities (Building G or AWT), New Wash Water Building (Building G/5), Administration and Laboratory Building (Building J), Main Building (Building A), Preliminary Treatment Building (Building K), the Biological Reactor Basins (Building 44) and Secondary Settling Tanks Building (Building 23), the Methanol Building (Building M) and part of Building L.

Relationships with Other Unit Processes

Two main 4160 volt (4.16 kv) switchgear lineups (SS-1, SS-2) located in the Building F Electrical Room distribute 4160 v, 3 phase power throughout the site via a system of underground concrete encased ductbanks and manholes (MHs). Satellite transformers step the voltage down to 480 v and supply power to each of the process building Motor Control Centers (MCCs). The exception to this is the five 1250 horsepower Process Air Compressor (PAC) motors in Building F that require a 4160 v, 3-phase power supply.

Design Parameters

The electrical system is sized to handle the design loads. The maximum connected load on SS-1 is 12.7 MVA and the demand load is 7.9 MVA. The maximum connected load on SS-2 is 14.3 MVA and the demand load is 9.3 MVA.

Reliability

Dominion -Virginia Power provides power to the site from two separate and independent sources, i.e., two separate buses in the utility substation. Each source is connected to the plant by conductors in separate concrete-encased duct bank and manhole systems. This ensures continuous power supply to the site. The internal distribution system has been designed such that a single fault at any power source will only disrupt the power supply to roughly half the electrical equipment in the plant. Power supply to essential process equipment is divided between more than one MCC.

Key Interlock System

Most transfers of loads between power source 1 and 2 are a manual operation using key interlocks installed on all switchgear, switchboards, and major MCC's. Each one of the two main circuit breakers in the switchgear, switchboard or major MCC has a key interlock with the tie circuit breaker. The locks are keyed such that there are three locks and two keys. Circuit breakers can only be closed by inserting the keys into the locks. Therefore, only two circuit breakers can be closed at the same time, which prevents closing all three circuit breakers at the same time and paralleling the power sources. There are 3 locations that have a slightly different arrangement of keys and locks. MCC-J-4C is key interlocked with the feeder to Chiller No.1. There are 2 feeders to MCC-J-4C. Only 1 circuit breaker can be closed at a time so there are 2 locks and 1 key. There are 2 circuit breakers that feed Chiller No.1. Only 1 circuit breaker can be closed at the same time so there are 2 locks and 1 key. MCC-J-4C and the Chiller No. 1 can not be fed from the same switchboard at the same time. Therefore, there are 2 locks and 1 key. Each of these 4 circuit breakers has 2 locks and requires 2 keys to close the circuit breaker. On MCC-N-1A/B there are 2 locks and 1 key on the feeders to panel N-DP3 and also in MCC-F-1A/B for the feeds to W3 Pump No. 3 and the Post Aeration Blower.

System Description

The electrical system has the following major equipment types:

Metal-Clad Switchgear - Metal-clad switchgear is an assembly of drawout vacuum circuit breakers and auxiliary equipment in a rigid metal assembly. The function of this equipment is to receive the main incoming service from the utility at 4.16 kv and distribute the 4.16 kv to transformers located at each major process building or to other 4.16 kv equipment located at other buildings. Switchgear SS-1 and SS-2 are Metal-Clad Switchgear.

Metal-Enclosed Low-Voltage Switchgear - Metal-enclosed low voltage switchgear is an assembly of drawout air break power circuit breakers and auxiliary equipment in a rigid metal assembly. The function of this equipment is to receive the incoming service from the secondary of a unit substation transformer at 480 volts and distribute the 480 volts to downstream 480 volt MCCs or to AFD's in freestanding enclosures located in the building.

Oil-Filled Pad Mounted Transformer - The oil-filled pad mounted transformers have a primary winding rated 4.16 kv. The secondary winding is rated 480 volts. The function of the transformer is to step the 4.16 kv primary down to 480 volts on the secondary to power the process equipment at a building. The oil-filled pad mounted transformer is mounted outdoors.

Low voltage (480 volt) Motor Control Centers (MCCs) - Because of the large quantity of motors in the plant the motor starters are mounted in a common assembly containing a horizontal bus that connects to a vertical bus in each section. The motor starters plug into the vertical sections.

Medium Voltage (4.16 kv) Motor Control Center - Performs the same function as a 480 volt MCC, except the motors are 4.16 kv.

Adjustable Frequency Drives (AFD) - AFDs provide the means to vary the speed of a motor. In this facility AFDs for motors 75 Hp and smaller are located in the 480 volt MCCs. AFDs for motors greater than 75 HP are located in their own dedicated freestanding enclosures.

Metal-Enclosed Switchgear - The metal-enclosed switchgear is an assembly of fused and non-fused load interrupter switches in a rigid metal assembly. The function of this equipment is to receive service at 4.16 kv and distribute the 4.16 kv to transformers located in the G/1, G/2, G/5 and G/6 Buildings. Switchgear SS-2-1 and SS-2-2 are Metal-Enclosed switchgear.

Unit-substation transformers - The unit substation transformers have a primary windings rated 4.16 kv. The secondary winding is rated 480 volts. The function of the transformer is to step the 4.16 kv primary down to 480 volts on the secondary in order to power the process equipment at a building. The unit substation transformer is mounted indoors. It is a dry-type cast-coil transformer. The major feature of these transformers is that the primary and secondary coils are completely encapsulated in an epoxy material.

Unit-Substation Primary Switch - The unit-substation primary switch is located on the primary of the unit substation transformer and provides a way to disconnect the transformer.

Switchboards - Switchboards are an assembly of drawout insulated case or molded case circuit breakers and auxiliary equipment in a rigid metal assembly. The function of this equipment is to receive the incoming service from the secondary of an oil -filled pad mounted transformer at 480 volts and distribute the 480 volts to downstream 480 volt Motor Control Centers (MCCs) or to Adjustable Frequency Drives (AFDs) in freestanding enclosures located in the building.

Automatic Transfer Switch (ATS) - This equipment provides a means to automatically transfer incoming power to equipment from a normal power source to an alternate power source when the normal power source experiences a voltage loss. An ATS is typically installed downstream of Motor Control Centers to automatically transfer lights and other essential loads between power sources.

Lightning Protection System - Each building has a lightning protection system, which consists of air terminals and copper conductors to a ground connection.

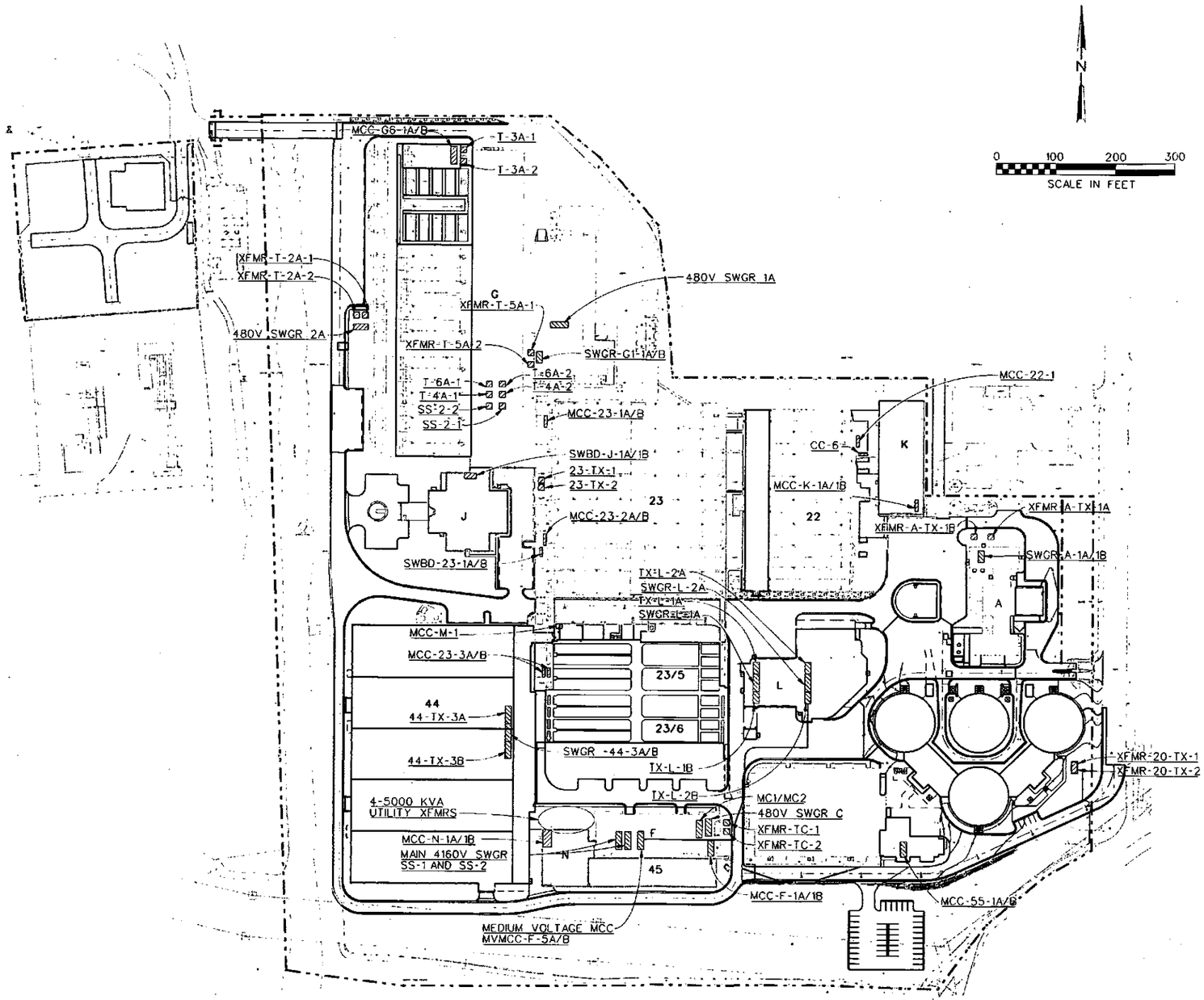

BUILDING LEGEND

A	MAIN BUILDING
F	PROCESS AIR COMPRESSOR BUILDING
G	ADVANCED TREATMENT FACILITIES
J	ADMIN/LAB BUILDING
K	PRELIMINARY TREATMENT BUILDING
L	SOLIDS BUILDING
M	METHANOL BUILDING
N	UV DISINFECTION BUILDING
20	DIGESTER COMPLEX
22	PRIMARY SETTLING TANKS
23	SECONDARY SETTLING TANKS
44	BIOLOGICAL REACTOR BASINS
45	POST AERATION BASINS
55	PRE-PASTEURIZATION

Figure 63-1
OVERALL ELECTRICAL SITE PLAN
ALEXANDRIA SANITATION AUTORITY
ADVANCED WASTEWATER TREATMENT FACILITY UPGRADE

w691e041-fim.dl21-MAR-2002 08:

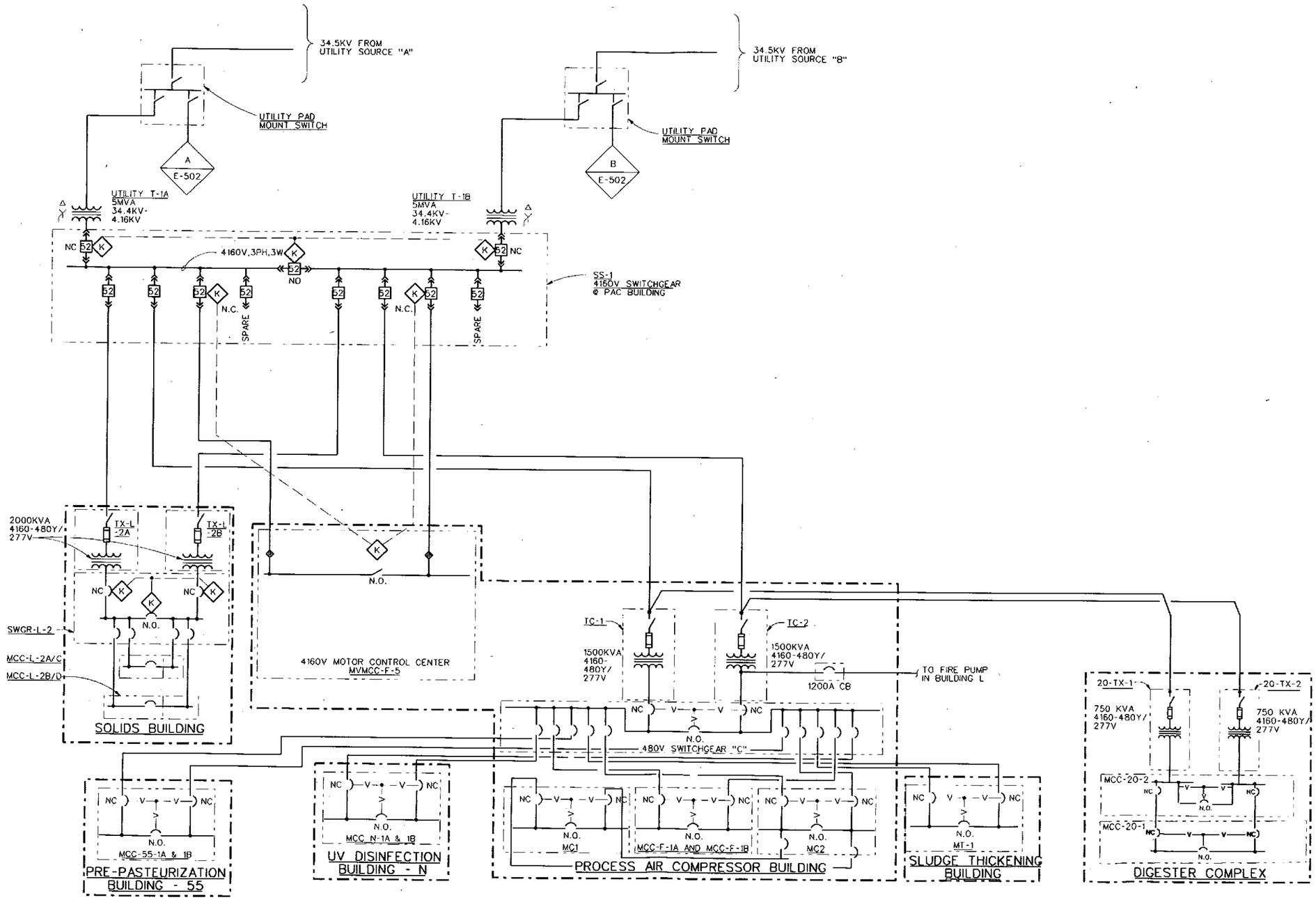

Figure 63-2
SYSTEM FED PLAN
SS-1 4.16KV SWITCHGEAR
ALEXANDRIA SANITATION AUTHORITY
ADVANCED WASTEWATER TREATMENT FACILITY UPGRADE

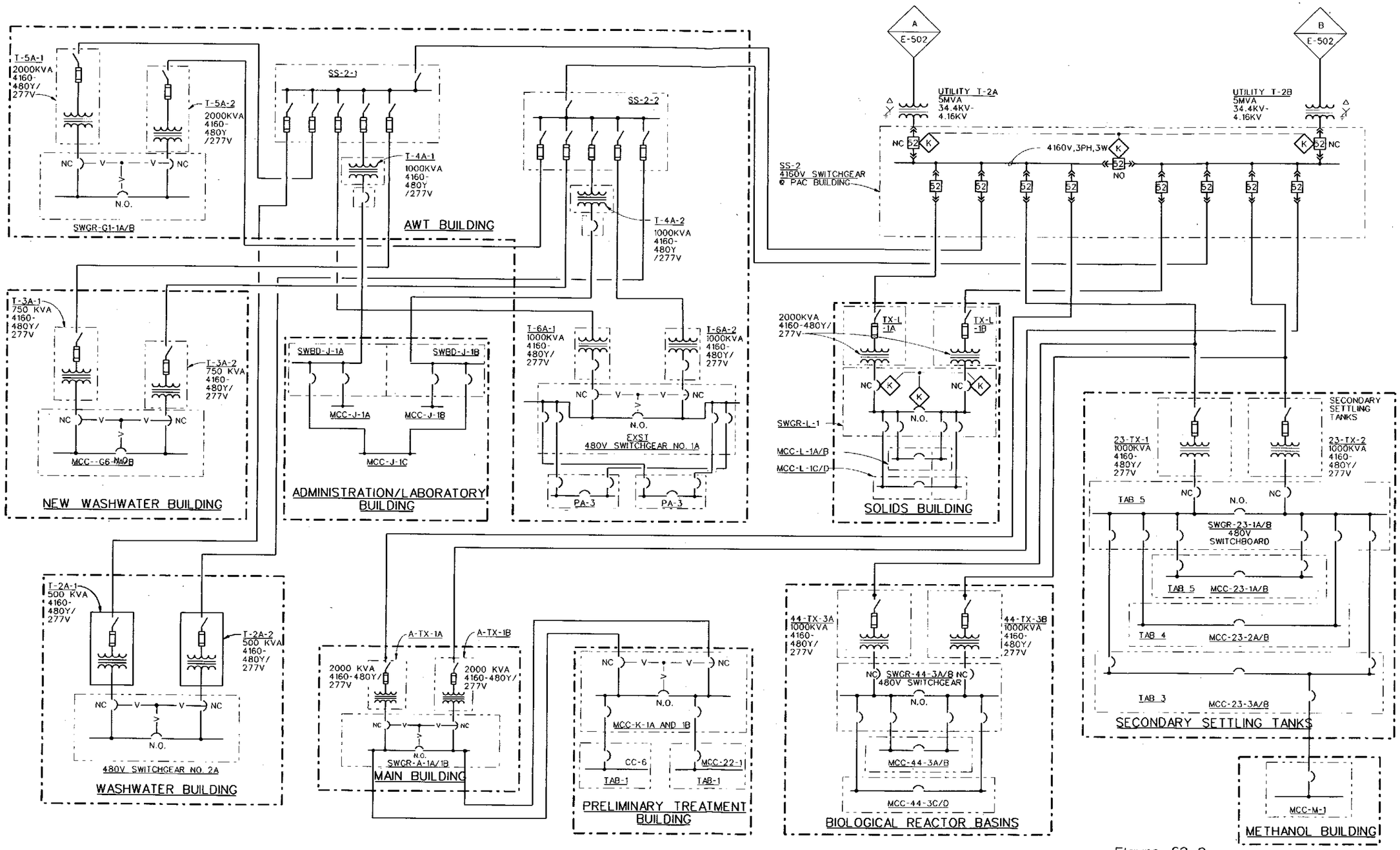

Figure 63-3
SYSTEM FED FROM
SS-2 4.16KV SWITCHGEAR
ALEXANDRIA SANITATION AUTHORITY
ADVANCED WASTEWATER TREATMENT FACILITY UPGRADE

ALEXANDRIA COMBINED TRUNK SEWERS AND INTERCEPTORS

Attachment for Sections G1 and G2, System Map and Diagram

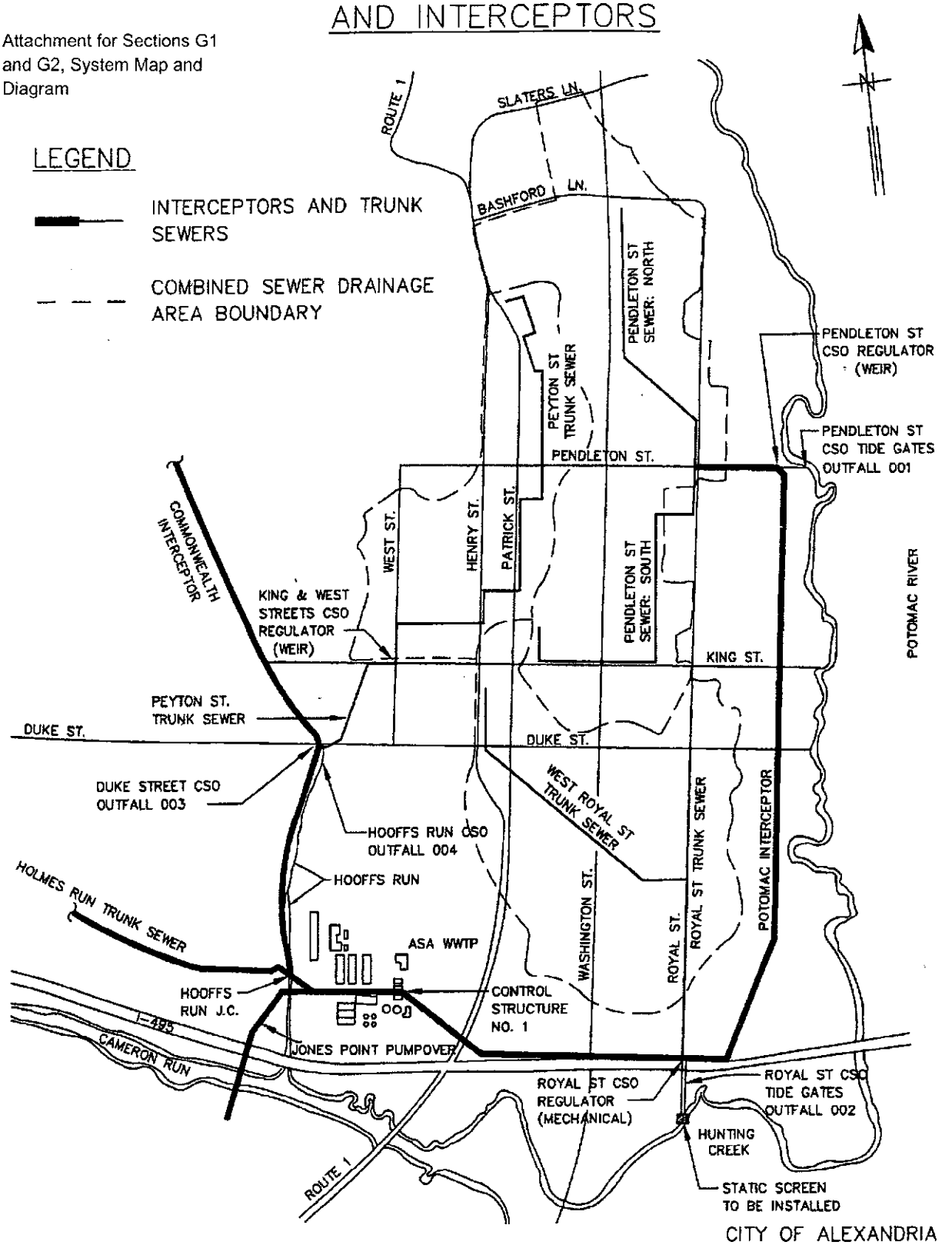

CITY OF ALEXANDRIA
TRANSPORTATION AND ENVIRONMENTAL SERVICES
COMBINED SEWER SYSTEM
2007 ANNUAL REPORT

GREELEY AND HANSEN

FILE: J:\0577\2004 CSS ANNUAL REPORT\COA_FIG-01 1:1 03/11/05 14:02 GH-G

Alexandria Renew Enterprises
VA0025160
Attachment For Section D - Expanded Effluent Data

Cadmium			
Date	Results	Units	MDL
9/18/2009	<.5	ug/l	0.5
9/19/2009	<.5	ug/l	0.5
9/20/2009	<.5	ug/l	0.5
9/21/2009	<.5	ug/l	0.5
9/22/2009	<.5	ug/l	0.5
9/23/2009	<.5	ug/l	0.5
9/24/2009	<.5	ug/l	0.5
10/4/2009	<.5	ug/l	0.5
10/5/2009	<.5	ug/l	0.5
10/6/2009	<.5	ug/l	0.5
10/7/2009	<.5	ug/l	0.5
10/8/2009	<.5	ug/l	0.5
10/9/2009	<.5	ug/l	0.5
10/10/2009	<.5	ug/l	0.5
1/8/2013	<.5	ug/l	0.5
7/21/2013	<.5	ug/l	0.5
8/7/2013	<.5	ug/l	0.5

Chromium			
Date	Results	Units	MDL
9/18/2009	<2	ug/l	2
9/19/2009	<2	ug/l	2
9/20/2009	<2	ug/l	2
9/21/2009	<2	ug/l	2
9/22/2009	<2	ug/l	2
9/23/2009	<2	ug/l	2
9/24/2009	<2	ug/l	2
10/4/2009	<2	ug/l	2
10/5/2009	<2	ug/l	2
10/6/2009	<2	ug/l	2
10/7/2009	<2	ug/l	2
10/8/2009	<2	ug/l	2
10/9/2009	<2	ug/l	2
10/10/2009	<2	ug/l	2
1/8/2013	<1	ug/l	1
7/21/2013	<1	ug/l	1
8/7/2013	<1	ug/l	1

Copper			
Date	Results	Units	MDL
9/18/2009	12	ug/l	2
9/19/2009	10	ug/l	2
9/20/2009	5	ug/l	2
9/21/2009	3	ug/l	2
9/22/2009	5	ug/l	2
9/23/2009	4	ug/l	2
9/24/2009	10	ug/l	2
10/4/2009	7	ug/l	2
10/5/2009	6	ug/l	2
10/6/2009	15	ug/l	2
10/7/2009	14	ug/l	2
10/8/2009	14	ug/l	2
10/9/2009	21	ug/l	2
10/10/2009	7	ug/l	2
1/8/2013	3	ug/l	2
7/21/2013	5	ug/l	2
8/7/2013	3	ug/l	2

Zinc			
Date	Results	Units	MDL
9/18/2009	39	ug/l	10
9/19/2009	36	ug/l	10
9/20/2009	29	ug/l	10
9/21/2009	26	ug/l	10
9/22/2009	26	ug/l	10
9/23/2009	26	ug/l	10
9/24/2009	22	ug/l	10
10/4/2009	160	ug/l	10
10/5/2009	63	ug/l	10
10/6/2009	110	ug/l	10
10/7/2009	23	ug/l	10
10/8/2009	25	ug/l	10
10/9/2009	29	ug/l	10
10/10/2009	28	ug/l	10
1/8/2013	28	ug/l	5
7/21/2013	27	ug/l	5
8/7/2013	20	ug/l	5

Hardness			
Date	Results	Units	MDL
1/6/2009	104.0	mg/l	10
1/13/2009	106.0	mg/l	10
1/20/2009	112.0	mg/l	10
1/29/2009	130.0	mg/l	10
2/3/2009	121.0	mg/l	10
2/10/2009	102.0	mg/l	10
2/17/2009	110.0	mg/l	10
2/24/2009	100.0	mg/l	10
3/3/2009	120.0	mg/l	10
3/10/2009	124.0	mg/l	10
3/17/2009	112.0	mg/l	10
3/25/2009	128.0	mg/l	10
3/31/2009	120.0	mg/l	10
4/7/2009	100.0	mg/l	10
4/14/2009	76.8	mg/l	10
4/20/2009	86.0	mg/l	10
4/28/2009	90.0	mg/l	10
5/5/2009	63.0	mg/l	10
5/12/2009	96.0	mg/l	10
5/19/2009	85.0	mg/l	10
5/26/2009	87.0	mg/l	10
6/2/2009	80.4	mg/l	10
6/9/2009	90.2	mg/l	10
6/16/2009	88.0	mg/l	10
6/23/2009	90.0	mg/l	10
6/30/2009	106.0	mg/l	10
7/7/2009	122.0	mg/l	10
7/7/2009	530.0	mg/l	10
7/14/2009	102.0	mg/l	10
7/20/2009	92.0	mg/l	10
7/27/2009	118.0	mg/l	10
8/4/2009	118.0	mg/l	10
8/4/2009	220.0	mg/l	10
8/4/2009	114.0	mg/l	10
8/11/2009	116.0	mg/l	10
8/18/2009	128.0	mg/l	10
8/25/2009	118.0	mg/l	10
9/1/2009	121.0	mg/l	10
9/8/2009	120.0	mg/l	10
9/15/2009	138.0	mg/l	10
9/17/2009	150.0	mg/l	10
9/17/2009	156.0	mg/l	10
9/18/2009	156.0	mg/l	10
9/18/2009	152.0	mg/l	10
9/18/2009	156.0	mg/l	10
9/19/2009	162.0	mg/l	10
9/19/2009	150.0	mg/l	10
9/19/2009	170.0	mg/l	10
9/20/2009	142.0	mg/l	10

Hardness			
Date	Results	Units	MDL
9/20/2009	142.0	mg/l	10
9/20/2009	148.0	mg/l	10
9/21/2009	138.0	mg/l	10
9/21/2009	136.0	mg/l	10
9/21/2009	144.0	mg/l	10
9/22/2009	140.0	mg/l	10
9/22/2009	148.0	mg/l	10
9/22/2009	152.0	mg/l	10
9/22/2009	148.0	mg/l	10
9/23/2009	148.0	mg/l	10
9/23/2009	150.0	mg/l	1
9/29/2009	136.0	mg/l	10
10/2/2009	144.0	mg/l	10
10/2/2009	138.0	mg/l	10
10/2/2009	142.0	mg/l	10
10/2/2009	144.0	mg/l	10
10/3/2009	150.0	mg/l	10
10/3/2009	142.0	mg/l	10
10/3/2009	158.0	mg/l	10
10/3/2009	122.0	mg/l	10
10/4/2009	145.0	mg/l	10
10/4/2009	164.0	mg/l	10
10/4/2009	152.0	mg/l	10
10/4/2009	156.0	mg/l	10
10/5/2009	144.0	mg/l	10
10/5/2009	170.0	mg/l	10
10/5/2009	124.0	mg/l	10
10/5/2009	150.0	mg/l	10
10/6/2009	166.0	mg/l	10
10/6/2009	146.0	mg/l	10
10/6/2009	154.0	mg/l	10
10/6/2009	170.0	mg/l	10
10/7/2009	143.0	mg/l	10
10/7/2009	157.0	mg/l	10
10/7/2009	157.0	mg/l	10
10/7/2009	155.0	mg/l	10
10/7/2009	190.0	mg/l	1
10/8/2009	149.0	mg/l	10
10/8/2009	154.0	mg/l	10
10/8/2009	162.0	mg/l	10
10/8/2009	151.0	mg/l	10
10/13/2009	150.0	mg/l	10
10/20/2009	148.0	mg/l	10
10/27/2009	150.0	mg/l	10
11/3/2009	146.0	mg/l	10
11/10/2009	111.0	mg/l	10
11/17/2009	126.0	mg/l	10
11/24/2009	94.0	mg/l	10
12/1/2009	111.0	mg/l	10

Hardness			
Date	Results	Units	MDL
12/8/2009	98.0	mg/l	10
12/15/2009	71.6	mg/l	10
12/21/2009	104.0	mg/l	10
12/29/2009	106.0	mg/l	10
1/5/2010	91.0	mg/l	10
1/12/2010	110.0	mg/l	10
1/19/2010	120.0	mg/l	10
1/26/2010	98.0	mg/l	10
2/2/2010	85.0	mg/l	10
2/8/2010	94.0	mg/l	10
2/16/2010	138.0	mg/l	10
2/22/2010	205.0	mg/l	10
2/22/2010	122.0	mg/l	10
2/23/2010	133.0	mg/l	10
2/23/2010	203.0	mg/l	10
2/25/2010	140.0	mg/l	10
2/25/2010	215.0	mg/l	10
3/1/2010	210.0	mg/l	10
3/2/2010	116.0	mg/l	10
3/2/2010	208.0	mg/l	10
3/9/2010	82.0	mg/l	10
3/16/2010	94.0	mg/l	10
3/23/2010	88.0	mg/l	10
3/30/2010	85.0	mg/l	10
4/6/2010	96.0	mg/l	10
4/13/2010	65.0	mg/l	10
4/20/2010	90.0	mg/l	10
4/27/2010	112.0	mg/l	10
5/4/2010	115.0	mg/l	10
5/11/2010	112.0	mg/l	10
5/18/2010	100.6	mg/l	10
5/25/2010	98.0	mg/l	10
6/1/2010	108.0	mg/l	10
6/8/2010	108.0	mg/l	10
6/15/2010	114.0	mg/l	10
6/22/2010	128.0	mg/l	10
6/29/2010	110.0	mg/l	10
7/6/2010	114.0	mg/l	10
7/13/2010	109.0	mg/l	10
7/20/2010	110.0	mg/l	10
7/27/2010	109.0	mg/l	10
7/29/2010	114.0	mg/l	10

Hardness			
Date	Results	Units	MDL
8/3/2010	110.0	mg/l	10
8/10/2010	134.0	mg/l	10
8/17/2010	134.0	mg/l	10
8/24/2010	132.0	mg/l	10
8/31/2010	117.0	mg/l	10
9/7/2010	128.8	mg/l	10
9/14/2010	122.0	mg/l	10
9/21/2010	142.0	mg/l	10
9/28/2010	134.0	mg/l	10
10/5/2010	112.0	mg/l	10
10/12/2010	124.0	mg/l	10
10/19/2010	102.0	mg/l	10
10/26/2010	111.0	mg/l	10
11/2/2010	114.0	mg/l	10
11/9/2010	102.0	mg/l	10
11/16/2010	104.0	mg/l	10
11/23/2010	110.0	mg/l	10
11/30/2010	124.0	mg/l	10
12/7/2010	108.0	mg/l	10
12/14/2010	108.0	mg/l	10
12/21/2010	110.0	mg/l	10
12/28/2010	116.0	mg/l	10
1/4/2011	135.0	mg/l	10
1/11/2011	120.0	mg/l	10
1/18/2011	128.0	mg/l	10
1/25/2011	126.0	mg/l	10
2/1/2011	124.0	mg/l	10
2/7/2011	134.2	mg/l	10
2/7/2011	64.2	mg/l	10
2/10/2011	62.2	mg/l	10
2/15/2011	130.0	mg/l	10
2/22/2011	126.0	mg/l	10
3/1/2011	120.0	mg/l	10
3/8/2011	124.0	mg/l	10
3/15/2011	74.0	mg/l	10
3/22/2011	90.0	mg/l	10
3/29/2011	104.0	mg/l	10
4/5/2011	94.0	mg/l	10
4/12/2011	104.6	mg/l	10
4/19/2011	95.4	mg/l	10
4/26/2011	98.0	mg/l	10
5/3/2011	102.0	mg/l	10

Hardness			
Date	Results	Units	MDL
5/10/2011	96.0	mg/l	10
5/17/2011	78.0	mg/l	10
5/31/2011	100.0	mg/l	10
6/7/2011	99.0	mg/l	10
6/14/2011	100.0	mg/l	10
6/21/2011	108.0	mg/l	10
6/28/2011	118.0	mg/l	10
7/5/2011	100.0	mg/l	10
7/12/2011	129.0	mg/l	10
7/19/2011	130.0	mg/l	10
7/26/2011	116.0	mg/l	10
8/2/2011	132.0	mg/l	10
8/9/2011	116.8	mg/l	10
8/11/2011	139.0	mg/l	10
8/16/2011	137.0	mg/l	10
8/23/2011	142.8	mg/l	10
8/30/2011	124.0	mg/l	10
9/6/2011	107.2	mg/l	10
9/13/2011	95.4	mg/l	10
9/20/2011	103.4	mg/l	10
9/27/2011	85.0	mg/l	10
10/4/2011	92.0	mg/l	10
10/11/2011	99.0	mg/l	10
10/18/2011	113.0	mg/l	10
10/25/2011	96.0	mg/l	10
11/1/2011	111.4	mg/l	10
11/8/2011	108.0	mg/l	10
11/15/2011	119.6	mg/l	10
11/22/2011	101.0	mg/l	10
11/29/2011	88.0	mg/l	10
12/6/2011	104.4	mg/l	10
12/13/2011	92.0	mg/l	10
12/20/2011	82.0	mg/l	10
12/27/2011	72.0	mg/l	10
1/3/2012	85.2	mg/l	10
1/10/2012	81.0	mg/l	10
1/17/2012	66.0	mg/l	10
1/24/2012	106.0	mg/l	10
1/31/2012	101.0	mg/l	10
2/7/2012	98.0	mg/l	10
2/14/2012	107.2	mg/l	10
2/21/2012	104.0	mg/l	10
2/29/2012	104.6	mg/l	10
3/6/2012	113.0	mg/l	10
3/13/2012	106.0	mg/l	10
3/20/2012	112.4	mg/l	10
3/27/2012	114.0	mg/l	10
4/4/2012	106.4	mg/l	10
4/10/2012	112.0	mg/l	10

Hardness			
Date	Results	Units	MDL
4/17/2012	120.8	mg/l	10
4/24/2012	114.0	mg/l	10
5/1/2012	108.8	mg/l	10
5/8/2012	127.2	mg/l	10
5/15/2012	116.0	mg/l	10
5/22/2012	124.0	mg/l	10
5/29/2012	97.4	mg/l	10
6/5/2012	96.0	mg/l	10
6/12/2012	114.0	mg/l	10
6/19/2012	115.2	mg/l	10
6/26/2012	122.0	mg/l	10
7/10/2012	120.0	mg/l	10
7/17/2012	122.0	mg/l	10
7/25/2012	124.0	mg/l	10
8/7/2012	132.4	mg/l	10
8/14/2012	136.6	mg/l	10
8/21/2012	136.4	mg/l	10
8/28/2012	132.0	mg/l	10
9/4/2012	138.6	mg/l	10
9/11/2012	141.2	mg/l	10
9/18/2012	137.8	mg/l	10
9/25/2012	138.0	mg/l	10
10/2/2012	136.8	mg/l	10
10/9/2012	138.4	mg/l	10
10/16/2012	141.0	mg/l	10
10/23/2012	137.0	mg/l	10
10/30/2012	140.0	mg/l	10
11/6/2012	96.0	mg/l	10
11/13/2012	88.0	mg/l	10
11/20/2012	110.0	mg/l	10
11/27/2012	107.0	mg/l	10
12/4/2012	124.6	mg/l	10
12/11/2012	122.6	mg/l	10
12/18/2012	122.0	mg/l	10
12/25/2012	112.0	mg/l	10
1/1/2013	118.4	mg/l	10
1/8/2013	108.4	mg/l	10
1/8/2013	105.0	mg/l	0.33
1/15/2013	100.0	mg/l	10
1/22/2013	98.0	mg/l	10
1/29/2013	107.6	mg/l	10
2/5/2013	93.8	mg/l	10
2/12/2013	86.0	mg/l	10
2/19/2013	92.0	mg/l	10
2/26/2013	98.0	mg/l	10
3/4/2013	104.0	mg/l	10
3/12/2013	97.2	mg/l	10
3/19/2013	79.4	mg/l	10
3/26/2013	77.0	mg/l	10

Hardness			
Date	Results	Units	MDL
4/2/2013	76.0	mg/l	10
4/9/2013	96.0	mg/l	10
4/16/2013	92.0	mg/l	10
4/24/2013	95.4	mg/l	10
4/30/2013	118.0	mg/l	10
5/7/2013	104.0	mg/l	10
5/14/2013	87.0	mg/l	10
5/21/2013	85.0	mg/l	10
5/28/2013	93.0	mg/l	10
6/4/2013	89.0	mg/l	10
6/11/2013	90.0	mg/l	10
6/18/2013	87.0	mg/l	10
6/25/2013	86.0	mg/l	10
7/2/2013	91.6	mg/l	10
7/9/2013	114.0	mg/l	10
7/16/2013	96.6	mg/l	10
7/21/2013	98.0	mg/l	0.33
7/23/2013	94.0	mg/l	10
7/30/2013	96.0	mg/l	10
8/6/2013	90.0	mg/l	10
8/7/2013	104.0	mg/l	10
8/13/2013	98.0	mg/l	10
8/20/2013	104.0	mg/l	10
8/27/2013	102.8	mg/l	10
9/3/2013	109.0	mg/l	10

Alexandria Renew Enterprises

VPDES Permit Application

VA0025160

NPDES Form 2A Additional Information

Additional Information

City of Alexandria, Virginia Sanitation Authority, d/b/a Alexandria Renew Enterprises
Permit Number - VA0025160

Question A.6.b and c - Flow – The annual average daily flow rate and maximum daily flow rate data periods are: **Two Years Ago**: 8/1/2010-7/31/2011, **One Year Ago**: 8/1/2011-7/31/2012, **This Year**: 8/1/2012-7/31/2013.

Question A.7 – Collection System – Fairfax County collection system entirely a separate sanitary system. Alexandria collection system has 85% separate, 15% combined.

Question A.9. e - Description of Outfall, for Outfall 001 – The Average daily flow rate data period used is 8/1/2010-7/31/13.

Question A.10.c – Description of Receiving Waters, for Outfall 001 – $CaCO_3$ data from eight sampling events at Hunting Creek near bridge on George Washington Parkway.

Question A.12 – Effluent Testing Information, for Outfall 001 – For all parameters and pollutants except for temperature, the data period used is 1/1/12 – 12/31/12. For temperature, the data period used for winter is 12/22/12-3/20/13 and the summer data period is 6/21/12-9/22/12.

Fecal Coliform data is unavailable. Instead, E. Coliform data is presented. Data for Average Daily Discharge for E. Coliform is the geometric mean of all data.

Question A.11.d – Description of Treatment, for Outfall 002 – The treatment facility has a post-aeration system, but discharging through Outfall 002 is before the post-aeration system.

Question A.12 – Effluent Testing Information, for Outfall 002 – No testing information is available for Outfall 002 since there has been no discharge in the past 9 ½ years. This outfall is located prior to UV disinfection, therefore it is assumed that with chlorination/dechlorination, the effluent would be the same as for Outfall 001.

Question A.9.f – Description of Outfall, for Outfall 016 – This is a constructed relief that relieves incoming interceptors in complete electrical/mechanical plant failure and to prevent inundation of plant and flooding. No discharges have occurred From January 2009 – August 2013.

Question A.12 – Effluent Testing Information, for Outfall 016 – No testing or sampling conducted.

Question A.9.f – Description of Outfall, for Outfall 017 – This is a pump station constructed overflow point. From January 2009 – August 2013 there have been four overflow events averaging 0.152 million gallons each.

Question A.11.a – Description of Treatment, for Outfall 017 – Flow goes through bar screen and can be held in equalization tanks. Overflows can occur from the equalization tanks.

Question A.12 – Effluent Testing Information, for Outfall 017 – No testing or sampling conducted.

Question B.6 – Effluent Testing Data (Greater than 0.1 mgd only), for Outfall 001 (No data from 002 due to no discharge) – For all parameters and pollutants except for oil and grease and total dissolved solids, the data period used is 1/1/12 – 12/31/12.

Note – 002 is intended for emergency use only. No testing information is available for Outfall 002 since there has been no discharge in the past 9 ½ years. This outfall is located prior to UV disinfection, therefore it is assumed that with chlorination/dechlorination, the effluent would be the same as for Outfall 001.

Part D – Expanded Effluent Testing Data, Metals (Total Recoverable), Cyanide, Phenols, and Hardness for Outfall 001 (No data from 002 due to no discharge)

Samples for Cyanide and Total Phenolic Compounds were collected on 9/17-24/2009, 10/4-10/2009, 1/8/2013, 7/21/2013 and 8/8/2013. Samples for Hardness were collected on 9/23//2009, 10/7/2009, 1/8/2013, 7/21/2013and 8/7/2013. Samples for Total Dissolved Solids were collected on 7/22/2013, 7/30/2013, and 8/7/2013. Samples for Total Oil and Grease were collected on 9/17-22/2009, 10/3-10/2009, 7/22/2013, 8/2/2013, 8/7/2013, and 8/8/2013. Samples for Antimony, Arsenic, Beryllium, Cadmium, Chromium, Copper, Lead, Mercury, Nickel, Selenium, Silver, Thallium, and Zinc were collected 9/18-24/2009, 10/4-10/2009, 1/8/2013, 7/21/2013, and 8/7/2013. Samples for Volatile Organic Compounds, Acid Extractable Compounds, and Base Neutral Compounds were collected 9/22/2009, 10/7/2009, 1/8/2013, 7/21/2013, and 8/8/2013.

The analytical method used for Antimony, Arsenic, Beryllium, Cadmium, Chromium, Copper, Lead, Nickel, Selenium, Silver, Thallium and Zinc for 2009 samples was EPA 200.8. The 2013 samples were analyzed using EPA 200.7.

The analytical method used for Mercury for the 2009 samples was EPA 245.1. The 2013 samples were analyzed using EPA 200.7.

The analytical method used for Cyanide for the 2009 samples was SM 4500CN-E. The 2013 samples were analyzed using EPA 335.4.

The analytical method used for 1,2-Dichlorobenzene, 1,3-Dichlorobenzene, 1,4-Dichlorobenzene for the 2009 samples was EPA 625. The 2013 samples were analyzed using EPA 624

Where MDL's changed between methods or sampling periods, maximum data used the higher MDL when all data was below the MDL.

For average data, MDL values were used for less than MDL results.

Alexandria Renew Enterprises

VPDES Permit Application

VA0025160

NPDES Form 2A Application Addendum

VPDES Permit Application Addendum

VA DEPARTMENT OF ENVIRONMENTAL QUALITY
NORTHERN
OCT 3 1 2013
REGIONAL OFFICE
WOODBRIDGE, VA

1. **Entity to whom the permit is to be issued:** Alexandria Renew Enterprises
Who will be legally responsible for the wastewater treatment facilities and compliance with the permit. This may or may not be the facility or property owner.

2. **Is this facility located within city or town boundaries?** Yes ☒ No ☐

3. **Provide the tax map parcel number for the land where the discharge is located.** Map #079.00 Block 01, Lot 13, 079.00/02/01 079.00/01/16; 079.00/02/09

4. **For the facility to be covered by this permit, how many acres will be disturbed during the next five years due to new construction activities?** 0

5. **What is the design average effluent flow of this facility?** 54 MGD
For industrial facilities, provide the max. 30-day average production level, include units:
N/A

In addition to the design flow or production level, should the permit be written with limits for any other discharge flow tiers or production levels? Yes ☐ No ☒
If "Yes", please identify the other flow tiers (in MGD) or production levels:
N/A

Please consider the following questions for both the flow tiers and the production levels (if applicable): Do you plan to expand operations during the next five years? Is your facility's design flow considerably greater than your current flow?

6. **Nature of operations generating wastewater:**
Domestic Wastewater Treatment Facility

98 % of flow from domestic connections/sources
Number of private residences to be served by the treatment works: _____

2 % of flow from non-domestic connections/sources

7. **Mode of discharge:** ☒ Continuous ☐ Intermittent ☐ Seasonal
Describe frequency and duration of intermittent or seasonal discharges:
N/A

8. **Identify the characteristics of the receiving stream at the point just above the facility's discharge point:**
X Permanent stream, never dry
___ Intermittent stream, usually flowing, sometimes dry
___ Ephemeral stream, wet-weather flow, often dry
___ Effluent-dependent stream, usually or always dry without effluent flow
___ Lake or pond at or below the discharge point
___ Other: _____

9. **Approval Date(s):**
O & M Manual May 2012 (Revised) **Sludge/Solids Management Plan** May 2010 (Revised)

Have there been any changes in your operations or procedures since the above approval dates? Yes ☐ No ☒

Alexandria Renew Enterprises

VPDES Permit Application

VA0025160

VPDES Sewage Sludge Permit Application Form

FACILITY NAME: Alexandria Renew Enterprises VPDES PERMIT NUMBER: VA0025160

VPDES SEWAGE SLUDGE PERMIT APPLICATION FORM

SCREENING INFORMATION

This application is divided into four sections. Section A pertains to all applicants. The applicability of Sections B, C and D depends on your facility's sewage sludge use or disposal practices. The information provided on this page will help you determine which sections to fill out.

VA DEPARTMENT OF ENVIRONMENTAL QUALITY
NORTHERN
OCT 31 2013
REGIONAL OFFICE
WOODBRIDGE, VA

1. All applicants must complete Section A (General Information).

2. Does this facility generate sewage sludge? X Yes ____ No

   Does this facility derive a material from sewage sludge? X Yes ____ No

   If you answered "Yes" to either, complete Section B (Generation Of Sewage Sludge or Preparation Of A Material Derived From Sewage Sludge).

3. Does this facility apply sewage sludge to the land? ____ Yes X No

   Is sewage sludge from this facility applied to the land? X Yes ____ No

   If you answer "No" to all above, skip Section C.

   If you answered "Yes" to either, answer the following three questions:

   a. Does the sewage sludge from this facility meet the ceiling concentrations, pollutant concentrations, Class A pathogen reduction requirements and one of the vector attraction reduction requirements 1-8, as identified in the instructions? X Yes ____ No

   b. Is sewage sludge from this facility placed in a bag or other container for sale or give-away for application to the land? ____ Yes X No

   c. Is sewage sludge from this facility sent to another facility for treatment or blending? X Yes ____ No

   If you answered "No" to all three, complete Section C (Land Application Of Bulk Sewage Sludge).

   If you answered "Yes" to a, b or c, skip Section C.

4. Do you own or operate a surface disposal site? ____ Yes X No

   If "Yes", complete Section D (Surface Disposal).

FACILITY NAME: Alexandria Renew Enterprises VPDES PERMIT NUMBER: VA0025160

SECTION A. GENERAL INFORMATION

All applicants must complete this section.

1. **Facility Information.**
   a. Facility name: Alexandria Renew Enterprises Water Resources Recovery Facility
   b. Contact person: Adrienne Fancher
      Title: Chief Operating Officer
      Phone: (703) 549-3381
   c. Mailing address:
      Street or P.O. Box: 1500 Eisenhower Avenue
      City or Town: Alexandria State: Virginia Zip: 22314
   d. Facility location:
      Street or Route #: 1500 Eisenhower Avenue
      County: N/A
      City or Town: Alexandria State: Virginia Zip: 22314
   e. Is this facility a Class I sludge management facility? X Yes ____ No
   f. Facility design flow rate: 54 mgd
   g. Total population served: 315,000
   h. Indicate the type of facility:
      X Publicly owned treatment works (POTW)
      ____ Privately owned treatment works
      ____ Federally owned treatment works
      ____ Blending or treatment operation
      ____ Surface disposal site
      ____ Other (describe): ____

2. **Applicant Information.** If the applicant is different from the above, provide the following: **N/A**
   a. Applicant name: ____
   b. Mailing address:
      Street or P.O. Box: ____
      City or Town: ____ State: ____ Zip: ____
   c. Contact person: ____
      Title: ____
      Phone: (____) ____
   d. Is the applicant the owner or operator (or both) of this facility?
      ____ owner ____ operator
   e. Should correspondence regarding this permit be directed to the facility or the applicant?
      ____ facility ____ applicant

3. **Permit Information.**
   a. Facility's VPDES permit number (if applicable): VA0025160
   b. List on this form or an attachment, all other federal, state or local permits or construction approvals received or applied for that regulate this facility's sewage sludge management practices:

Permit Number:	Type of Permit:
N/A	N/A
N/A	N/A

FACILITY NAME: Alexandria Renew Enterprises VPDES PERMIT NUMBER: VA0025160

4. **Indian Country.** Does any generation, treatment, storage, application to land or disposal of sewage sludge from this facility occur in Indian Country? _____ Yes __X__ No If "Yes", describe:

5. **Topographic Map.** Provide a topographic map or maps (or other appropriate maps if a topographic map is unavailable) that shows the following information. Maps should include the area one mile beyond all property boundaries of the facility:
   a. Location of all sewage sludge management facilities, including locations where sewage sludge is generated, stored, treated, or disposed. **See attachment for NPDES Form 2A, Section B.2 for location where sewage sludge is generated, stored and treated. Contractor identified in A.7 holds permits for disposal. See attachment for Biosolids Application Summary to each county.**
   b. Location of all wells, springs, and other surface water bodies listed in public records or otherwise known to the applicant within 1/4 mile of the property boundaries.

6. **Line Drawing.** Provide a line drawing and/or a narrative description that identifies all sewage sludge processes that will be employed during the term of the permit including all processes used for collecting, dewatering, storing, or treating sewage sludge, the destination(s) of all liquids and solids leaving each unit, and all methods used for pathogen reduction and vector attraction reduction. **See attachment for NPDES Form 2A, Section B.3.**

7. **Contractor Information.** Are any operational or maintenance aspects of this facility related to sewage sludge generation, treatment, use or disposal the responsibility of a contractor? __X__ Yes _____ No

   If "Yes", provide the following for each contractor (attach additional pages if necessary).

   Name: Synagro - WWT, Inc

   Mailing address:

   Street or P.O. Box: 7014 East Baltimore Street

   City or Town: Baltimore State: MD Zip: 21224

   Phone: (410) 284-4120

   Contractor's Federal, State or Local Permit Number(s) applicable to this facility's sewage sludge:

   VDHBUR 33, 42, 112, 131 VPA 00052, 00062, 00063, 00064, 00824, 01578,

   If the contractor is responsible for the use and/or disposal of the sewage sludge, provide a description of the service to be provided to the applicant and the respective obligations of the applicant and the contractor(s).
   The contractor shall furnish all equipment and personnel necessary to haul and beneficially reuse biosolids generated by Alexandria Renew Enterprises (AlexRenew). AlexRenew shall provide a monthly certification statement to contractor that specify the quality of the biosolids and warrant that the biosolids are non-hazardous as determined by the results of an annual Toxic Characteristic Leaching Procedure. AlexRenew shall compensate contractor for services provided.

8. **Pollutant Concentrations.** Using the table below or a separate attachment, provide sewage sludge monitoring data for the pollutants which limits in sewage sludge have been established in 9 VAC 25-31-10 et seq. for this facility's expected use or disposal practices. All data must be based on three or more samples taken at least one month apart and must be no more than four and one-half years old.

POLLUTANT	CONCENTRATION (mg/kg dry weight)	SAMPLE DATE	ANALYTICAL METHOD	DETECTION LEVEL FOR ANALYSIS
Arsenic	4.7	2012 Monthly Data Avg.	SW 6010C	1.0 mg/kg
Cadmium	1.5	2012 Monthly Data Avg.	SW 6010C	1.0 mg/kg
Chromium	46.7	2012 Monthly Data Avg.	SW 6010C	5 mg/kg
Copper	393	2012 Monthly Data Avg.	SW 6010C	1 mg/kg
Lead	34.0	2012 Monthly Data Avg.	SW 6010C	5 mg/kg
Mercury	1.2	2012 Monthly Data Avg.	SW 7471B	1.0 mg/kg
Molybdenum	8.8	2012 Monthly Data Avg.	SW 6010C	5 mg/kg

Nickel	16.3	2012 Monthly Data Avg.	SW 6010C	5 mg/kg
Selenium	4.1	2012 Monthly Data Avg.	SW 6010C	1.0 mg/kg
Zinc	917	2012 Monthly Data Avg.	SW 6010C	1 mg/kg

FACILITY NAME: Alexandria Renew Enterprises **VPDES PERMIT NUMBER:** VA0025160

9. **Certification.** Read and submit the following certification statement with this application. Refer to the instructions to determine who is an officer for purposes of this certification. Indicate which parts of the application you have completed and are submitting:

   X Section A (General Information)

   X Section B (Generation of Sewage Sludge or Preparation of a Material Derived from Sewage Sludge)

   X Section C (Land Application of Bulk Sewage Sludge)

   _____ Section D (Surface Disposal)

   "I certify under penalty of law that this document and all attachments were prepared under my direction or supervision in accordance with a system designed to assure that qualified personnel properly gather and evaluate the information submitted. Based on my inquiry of the person or persons who manage the system or those persons directly responsible for gathering the information, the information is, to the best of my knowledge and belief, true, accurate and complete. I am aware that there are significant penalties for submitting false information, including the possibility of fine and imprisonment for knowing violations."

   Name and official title Karen L. Pallansch, Chief Executive Officer

   Signature Karen Pallansch Date Signed 10·31·13

   Telephone number (703) 549-3381

   Upon request of the department, you must submit any other information necessary to assess sewage sludge use or disposal practices at your facility or identify appropriate permitting requirements.

FACILITY NAME: Alexandria Renew Enterprises VPDES PERMIT NUMBER: VA0025160

SECTION B. GENERATION OF SEWAGE SLUDGE OR PREPARATION OF A MATERIAL DERIVED FROM SEWAGE SLUDGE

Complete this section if your facility generates sewage sludge or derives a material from sewage sludge

1. **Amount Generated On Site.**
   Total dry metric tons per 365-day period generated at your facility: 5481 dry metric tons (**2012 Data**)

2. **Amount Received from Off Site.** If your facility receives sewage sludge from another facility for treatment, use or disposal, provide the following information for each facility from which sewage sludge is received. If you receive sewage sludge from more than one facility, attach additional pages as necessary. **N/A**

   a. Facility name: N/A

   b. Contact Person: N/A

   Title: N/A

   Phone: ( ) N/A

   c. Mailing address:

   Street or P.O. Box: N/A

   City or Town: N/A State: N/A Zip: N/A

   d. Facility location: N/A

   (not P.O. Box) N/A

   e. Total dry metric tons per 365-day period received from this facility: N/A dry metric tons

   f. Describe, on this form or on another sheet of paper, any treatment processes known to occur at the off-site facility, including blending activities and treatment to reduce pathogens or vector attraction characteristics:

   N/A

3. **Treatment Provided at Your Facility.**

   a. Which class of pathogen reduction is achieved for the sewage sludge at your facility?
   X Class A ____ Class B ____ Neither or unknown

   b. Describe, on this form or another sheet of paper, any treatment processes used at your facility to reduce pathogens in sewage sludge: Sewage sludge is treated in a time-temperature pasteurization process under EPA Alternative 5 – Use of a PFRP

   c. Which vector attraction reduction option is met for the sewage sludge at your facility?

   X Option 1 (Minimum 38 percent reduction in volatile solids)

   ____ Option 2 (Anaerobic process, with bench-scale demonstration)

   ____ Option 3 (Aerobic process, with bench-scale demonstration)

   ____ Option 4 (Specific oxygen uptake rate for aerobically digested sludge)

   ____ Option 5 (Aerobic processes plus raised temperature)

   ____ Option 6 (Raise pH to 12 and retain at 11.5)

   ____ Option 7 (75 percent solids with no unstabilized solids)

   ____ Option 8 (90 percent solids with unstabilized solids)

   ____ None or unknown

   d. Describe, on this form or another sheet of paper, any treatment processes used at your facility to reduce vector attraction properties of sewage sludge: This facility utilizes anaerobic digestion to reduce the mass of volatile solids in the sewage sludge by at least 38%. The sludge is held in completely mixed high-rate digesters at 95 Deg. F for at least 15 days.

   e. Describe, on this form or another sheet of paper, any other sewage sludge treatment activities, including

blending, not identified in a - d above: Less than 1% of annual production of dewatered biosolids is blended with woody waste for use as a soil amendment product.

4. Preparation of Sewage Sludge Meeting Ceiling and Pollutant Concentrations, Class A Pathogen Requirements and One of Vector Attraction Reduction Options 1-8 (EQ Sludge).

(If sewage sludge from your facility does not meet all of these criteria, skip Question 4.)

a. Total dry metric tons per 365-day period of sewage sludge subject to this section that is applied to the land:

5481 dry metric tons

b. Is sewage sludge subject to this section placed in bags or other containers for sale or give-away?

____ Yes X No

5. Sale or Give-Away in a Bag or Other Container for Application to the Land.

(Complete this question if you place sewage sludge in a bag or other container for sale or give-away prior to land application. Skip this question if sewage sludge is covered in Question 4.)

a. Total dry metric tons per 365-day period of sewage sludge placed in a bag or other container at your facility for sale or give-away for application to the land: N/A dry metric tons

b. Attach, with this application, a copy of all labels or notices that accompany the sewage sludge being sold or given away in a bag or other container for application to the land. **N/A**

6. Shipment Off Site for Treatment or Blending.

(Complete this question if sewage sludge from your facility is sent to another facility that provides treatment or blending. This question does not apply to sewage sludge sent directly to a land application or surface disposal site. Skip this question if the sewage sludge is covered in Questions 4 or 5. If you send sewage sludge to more than one facility, attach additional sheets as necessary.)

a. Receiving facility name: Riverside Mulch

b. Facility contact: Allan Stump

Title: President

Phone: (304) 822-3380

c. Mailing address:

Street or P.O. Box: South Branch River Road RR8

City or Town: Romney State: WV Zip: 26757

d. Total dry metric tons per 365-day period of sewage sludge provided to receiving facility:

0 dry metric tons NOTE: No sludge was blended in 2012.

e. List, on this form or an attachment, the receiving facility's VPDES permit number as well as the numbers of all other federal, state or local permits that regulate the receiving facility's sewage sludge use or disposal practices:

Permit Number:	Type of Permit:
VPA00064	Virginia Pollution Abatement Permit
6300	City of Hopewell, Virginia Indirect Wastewater Discharge Permit (Incineration of Biosolids)

f. Does the receiving facility provide additional treatment to reduce pathogens in sewage sludge from your facility?

____ Yes X No

Which class of pathogen reduction is achieved for the sewage sludge at the receiving facility?

____ Class A ____ Class B X Neither or unknown

Describe, on this form or another sheet of paper, any treatment processes used at the receiving facility to reduce pathogens in sewage sludge:

N/A

g. Does the receiving facility provide additional treatment to reduce vector attraction characteristics of the sewage

sludge? _____ Yes __X__ No

Which vector attraction reduction option is met for the sewage sludge at the receiving facility?

_____ Option 1 (Minimum 38 percent reduction in volatile solids)

_____ Option 2 (Anaerobic process, with bench-scale demonstration)

_____ Option 3 (Aerobic process, with bench-scale demonstration)

_____ Option 4 (Specific oxygen uptake rate for aerobically digested sludge)

_____ Option 5 (Aerobic processes plus raised temperature)

_____ Option 6 (Raise pH to 12 and retain at 11.5)

_____ Option 7 (75 percent solids with no unstabilized solids)

_____ Option 8 (90 percent solids with unstabilized solids)

__X__ None unknown

Describe, on this form or another sheet of paper, any treatment processes used at the receiving facility to reduce vector attraction properties of sewage sludge: N/A

h. Does the receiving facility provide any additional treatment or blending not identified in f or g above?
__X__ Yes _____ No

If "Yes", describe, on this form or another sheet of paper, the treatment processes not identified in f or g above:

Biosolids blended with woody waste

i. If you answered "Yes" to f, g or h above, attach a copy of any information you provide to the receiving facility to comply with the "notice and necessary information" requirement of 9 VAC 25-31-530.G.

j Does the receiving facility place sewage sludge from your facility in a bag or other container for sale or give-away for application to the land? _____ Yes __X__ No

If "Yes", provide a copy of all labels or notices that accompany the product being sold or given away.

k. Will the sewage sludge be transported to the receiving facility in a truck-mounted watertight tank normally used for such purposes? __X__ Yes _____ No. If "No", provide description and specification on the vehicle used to transport the sewage sludge to the receiving facility.

Show the haul route(s) on a location map or briefly describe the haul route below and indicate the days of the week and the times of the day sewage sludge will be transported. I-95S to I-495W to I-66W to SR-3000 to Route 28S to Midland Road to Airport Road to the Riverside Mulch facility. Hauling on occurs Monday – Friday.

7. Land Application of Bulk Sewage Sludge.

(Complete Question 7.a if sewage sludge from your facility is applied to the land, unless the sewage sludge is covered in Questions 4, 5 or 6. Complete Question 7.b, c & d only if you are responsible for land application of sewage sludge.)

a. Total dry metric tons per 365-day period of sewage sludge applied to all land application sites:

N/A dry metric tons

b. Do you identify all land application sites in Section C of this application? _____ Yes _____ No **N/A**

If "No", submit a copy of the Land Application Plan (LAP) with this application (LAP should be prepared in accordance with the instructions).

c. Are any land application sites located in States other than Virginia? _____ Yes _____ No **N/A**

If "Yes", describe, on this form or on another sheet of paper, how you notify the permitting authority for the States where the land application sites are located. Provide a copy of the notification.

N/A

d. Attach a copy of any information you provide to the owner or lease holder of the land application sites to comply with

the "notice and necessary" information requirement of 9 VAC 25-31-530 F and/or H (Examples may be obtained in Appendix IV).

FACILITY NAME: Alexandria Renew Enterprises VPDES PERMIT NUMBER: VA0025160

8. **Surface Disposal.**

(Complete Question 8 if sewage sludge from your facility is placed on a surface disposal site.)

a. Total dry metric tons per 365-day period of sewage sludge from your facility placed on all surface disposal sites: N/A dry metric tons

b. Do you own or operate all surface disposal sites to which you send sewage sludge for disposal?
_____ Yes _____ No **N/A**

If "No", answer questions c - g for each surface disposal site that you do not own or operate. If you send sewage sludge to more than one surface disposal site, attach additional pages as necessary.

c. Site name or number: N/A

d. Contact person: N/A

Title: N/A

Phone: (_____) N/A

Contact is: _____ Site Owner _____ Site operator **N/A**

e. Mailing address:

Street or P.O. Box: N/A

City or Town: N/A State: _____ Zip: _____

f. Total dry metric tons per 365-day period of sewage sludge from your facility placed on this surface disposal site: N/A dry metric tons

g. List, on this form or an attachment, the surface disposal site VPDES permit number as well as the numbers of all other federal, state or local permits that regulate the sewage sludge use or disposal practices at the surface disposal site:

Permit Number:	Type of Permit:
N/A	

9. **Incineration.**

(Complete Question 9 if sewage sludge from your facility is fired in a sewage sludge incinerator.)

a. Total dry metric tons per 365-day period of sewage sludge from your facility fired in a sewage sludge incinerator: 0 dry metric tons **(Used on an emergency basis only)**

b. Do you own or operate all sewage sludge incinerators in which sewage sludge from your facility is fired?
_____ Yes ____ No

If "No", answer questions c - g for each sewage sludge incinerator that you do not own or operate. If you send sewage sludge to more than one sewage sludge incinerator, attach additional pages as necessary.

c. Incinerator name or number: Hopewell Regional Wastewater Treatment Facility

d. Contact person: Mark Haley

Title: Director

Phone: (804) 541-2240

Contact is: _____ Incinerator Owner X Incinerator Operator

e. Mailing address:

Street or P.O. Box: PO Box 969 231 Hummel Ross Road

City or Town: Hopewell State: VA Zip: 23860

f. Total dry metric tons per 365-day period of sewage sludge from your facility fired in this sewage sludge incinerator: 0 dry metric tons **(Used on an emergency basis only)**

g. List on this form or an attachment the numbers of all other federal, state or local permits that regulate the firing

of sewage sludge at this incinerator:

Permit Number:	Type of Permit:
VA00666630	VPDES
50735	Air

10. Disposal in a Municipal Solid Waste Landfill.

(Complete Question 10 if sewage sludge from your facility is placed on a municipal solid waste landfill. Provide the following information for each municipal solid waste landfill on which sewage sludge from your facility is placed. If sewage sludge is placed on more than one municipal solid waste landfill, attach additional pages as necessary.)

a. Landfill name: N/A

b. Contact person: N/A

Title: N/A

Phone: ( ) N/A

Contact is: _____ Landfill Owner _____ Landfill Operator **N/A**

c. Mailing address:

Street or P.O. Box: N/A

City or Town: N/A State: _____ Zip: _____

d. Landfill location.

Street or Route #: N/A

County: N/A

City or Town: N/A State: _____ Zip: _____

e. Total dry metric tons per 365-day period of sewage sludge placed in this municipal solid waste landfill:

N/A dry metric tons

f. List, on this form or an attachment, the numbers of all federal, state or local permits that regulate the operation of this municipal solid waste landfill:

Permit Number:	Type of Permit:
N/A	

g. Does sewage sludge meet applicable requirements in the Virginia Solid Waste Management Regulation, 9 VAC 20-80-10 et seq., concerning the quality of materials disposed in a municipal solid waste landfill?
_____ Yes _____ No **N/A**

h. Does the municipal solid waste landfill comply with all applicable criteria set forth in the Virginia Solid Waste Management Regulation, 9 VAC 20-80-10 et seq.? _____ Yes _____ No **N/A**

i. Will the vehicle bed or other container used to transport sewage sludge to the municipal solid waste landfill be watertight and covered? _____ Yes _____ No **N/A**

Show the haul route(s) on a location map or briefly describe the route below and indicate the days of the week and time of the day sewage sludge will be transported. N/A

FACILITY NAME: Alexandria Renew Enterprises VPDES PERMIT NUMBER: VA0025160

SECTION C. LAND APPLICATION OF BULK SEWAGE SLUDGE

Complete this section for sewage sludge that is land applied unless any of the following conditions apply:

- ***The sewage sludge meets the Table 1 ceiling concentrations, the Table 3 pollutant concentrations, Class A pathogen requirements and one of the vector attraction reduction options 1-8 (fill out B.4 instead) (EQ Sludge); or***
- ***The sewage sludge is sold or given away in a bag or other container for application to the land (fill out B.5 instead); or***
- ***You provide the sewage sludge to another facility for treatment or blending (fill out B.6 instead).***

Complete Section C for every site on which the sewage sludge that you reported in B.7 is land applied.

1. Identification of Land Application Site.

a. Site name or number: N/A

b. Site location (Complete i and ii)

i. Street or Route#: N/A

County: N/A

City or Town: N/A State: N/A Zip: N/A

ii. Latitude: N/A Longitude: N/A

Method of latitude/longitude determination **N/A**

_____ USGS map _____ Filed survey _____ Other

c. Topographic map. Provide a topographic map (or other appropriate map if a topographic map is unavailable) that shows the site location.

2. Owner Information.

a. Are you the owner of this land application site? _____ Yes _____ No **N/A**

b. If "No", provide the following information about the owner:

Name: N/A

Street or P.O. Box: N/A

City or Town: N/A State: N/A Zip: N/A

Phone: (_____) N/A

3. Applier Information:

a. Are you the person who applies, or who is responsible for application of, sewage sludge to this land application site?
_____ Yes _____ No **N/A**

b. If "No", provide the following information for the person who applies the sewage sludge:

Name: N/A

Street or P.O. Box: N/A

City or Town: N/A State: N/A Zip: N/A

Phone: (_____) N/A

c. List, on this form or an attachment, the numbers of all federal, state or local permits that regulate the person who applies sewage sludge to this land application site:

Permit Number:	Type of Permit:
N/A	N/A

4. Site Type. Identify the type of land application site from among the following: **N/A**

_____ Agricultural land _____ Reclamation site _____ Forest

_____ Public contact site _____ Other (describe _____

5. Vector Attraction Reduction. N/A

Are any vector attraction reduction requirements met when sewage sludge is applied to the land application site?

_____ Yes _____ No If "Yes", answer a and b.

a. Indicate which vector attraction reduction option is met: **N/A**

_____ Option 9 (Injection below land surface)

_____ Option 10 (Incorporation into soil within 6 hours)

b. Describe, on this form or on another sheet of paper, any treatment processes used at the land application site to reduce the vector attraction properties of sewage sludge:

N/A

6. **Cumulative Loadings and Remaining Allotments.**

(Complete Question 6 only if the sewage sludge applied to this site since July 20, 1993 is subject to the cumulative pollutant loading rates (CPLRs) - see instructions.)

a. Have you contacted DEQ or the permitting authority in the state where the sewage sludge subject to the CPLRs will be applied to ascertain whether bulk sewage sludge subject to the CPLRs has been applied to this site since July 20, 1993? _____ Yes _____ No **N/A**

If "No", sewage sludge subject to the CPLRs may not be applied to this site.

If "Yes", provide the following information:

Permitting authority: N/A

Contact person: N/A

Phone: (_____) N/A

b. Based upon this inquiry, has bulk sewage sludge subject to the CPLRs been applied to this site since July 20, 1993? _____ Yes _____ No If "No", skip the rest of Question 6. If "Yes", answer questions c - e. **N/A**

c. Site size, in hectares: _____ (one hectare = 2.471 acres) **N/A**

d. Provide the following information for every facility other than yours that is sending or has sent sewage sludge subject to the CPLRs to this site since July 20, 1993. If more than one such facility sends sewage sludge to this site, attach additional pages as necessary.

Facility name: N/A

Facility contact: N/A

Title: N/A

Phone: (_____) N/A

Mailing address.

Street or P.O. Box: N/A

City or Town: N/A State: N/A Zip: N/A

e. Provide the total loading and allotment remaining, in kg/hectare, for each of the following pollutants: **N/A**

	Cumulative loading	Allotment remaining
Arsenic		
Cadmium		
Copper		
Lead		
Mercury		
Nickel		
Selenium		
Zinc		

Complete Questions 7-12 below only if you apply sewage sludge, or you are responsible for land application of sewage sludge. Information required by these questions may be prepared as attachments to this form. Skip the following questions if you contract land application to someone else (as indicated under Section A.7) who is responsible for the operation.

7. Sludge Characterization. Use the table below or a separate attachment, provide at least one analysis for each parameter. N/A

PCBs (mg/kg)	_____
pH (S. U.)	_____
Percent Solids (%)	_____
Ammonium Nitrogen (mg/kg)	_____
Nitrate Nitrogen (mg/kg)	_____
Total Kjeldahl Nitrogen (mg/kg)	_____
Total Phosphorus (mg/kg)	_____
Total Potassium (mg/kg)	_____
Alkalinity as $CaCO_3$* (mg/kg)	_____

* Lime treated sludge (10% or more lime by dry weight) should be analyzed for percent $CaCO_3$.

8. Storage Requirements. N/A

Existing and proposed sludge storage facilities must provide an estimated annual sludge balance on a monthly basis incorporating such factors as storage capacity, sludge production and land application schedule. Include pertinent calculations justifying storage requirements.

Proposed sludge storage facilities must also provide the following information:

a. A sludge storage site layout on a 7.5 minute topographic quadrangle or other appropriate scaled map to show the following topographic features of the surrounding landscape to a distance of 0.25 mile. Clearly mark the property line.

1) Water wells, abandoned or operating
2) Surface waters
3) Springs
4) Public water supply(s)
5) Sinkholes
6) Underground and/or surface mines
7) Mine pool (or other) surface water discharge points
8) Mining spoil piles and mine dumps
9) Quarry(s)
10) Sand and gravel pits
11) Gas and oil wells
12) Diversion ditch(s)
13) Agricultural drainage ditch(s)
14) Occupied dwellings, including industrial and commercial establishments
15) Landfills or dumps
16) Other unlined impoundments
17) Septic tanks and drainfields
18) Injection wells
19) Rock outcrops

b. A topographic map of sufficient detail to clearly show the following information:

1) Maximum and minimum percent slopes
2) Depressions on the site that may collect water
3) Drainageways that may attribute to rainfall run-on to or runoff from this site
4) Portions of the site (if any) which are located with the 100-year floodplain and how the storage facility will be protected from flooding

c. Data and specifications for the storage facility lining material.

d. Plan and cross-sectional views of the storage facility.

e. Depth from the bottom of the storage facility to the seasonal high water table and separation distance to the permanent water table.

9. **Land Area Requirements.** Provide calculations justifying the land area requirements for land application of sewage sludge taking into consideration average soil productivity group, crop(s) to be grown and most limiting factor(s) of the sewage sludge, specifically Plant Available Nitrogen (PAN), Calcium Carbonate Equivalence (CCE), and metal loadings (CPLR sewage sludge only), where applicable. Relate PAN, CCE, and metal loadings to demonstrate the most limiting factor for land application.

10. **Landowner Agreement Forms.** Provide a properly completed Sewage Sludge Application Agreement Form (attached) for each landowner if sewage sludge is to be applied onto land not owned by the applicant. **N/A**

11. **Ground Water Monitoring. N/A**

    Are any ground water monitoring data available for this land application site? _____ Yes _____ No

    If "Yes", submit the ground water monitoring data with this permit application. Also submit a written description of the well locations, approximate depth to ground water, and the ground water monitoring procedures used to obtain these data.

12. **Land Application Site Information. N/A**

    (Complete Items a-d for sites receiving infrequent application - land application of sewage sludge up to the agronomic rate at a frequency of once in a 3 year period; complete Items a-h for sites receiving frequent application - land application of sewage sludge in excess of 70% the agronomic rate at a frequency greater than once in a 3 year period)

    a. Provide a general location map for each county which clearly indicates the location of all the land application sites.

    b. For each land application site provide a site plan of sufficient detail to clearly show the concerned landscape features and associated buffer zones (See instructions). Provide a legend for each landscape feature and the net acreage for each field taking into account the proposed buffer zones.

    c. In order to ensure that land application of bulk sewage sludge will not impact federally listed threatened or endangered species or federally designated critical habitat, the applicant must notify the field office of the U. S. Department of the Interior, Fish and Wildlife Service (FWS), by a letter, the proposed land application activities with the identification of the land application sites. The address and phone number of FWS are provided below.

       U.S. Fish and Wildlife Service
       Virginia Field Office
       P.O. Box 480
       White Marsh, VA 23183
       TEL: (804) 693-6694

       Provide a copy of the notification letter with this application form.

    d. Provide a soil survey map, preferably photographically based, with the field boundaries clearly marked. (A USDA-SCS soil survey map should be provided, if available.)

       Provide a detailed legend for each soil survey map which uses accepted USDA-SCS descriptions of the typifying pedon for each soil series (soil type). Complex associations may be described as a range of characteristics. Soil descriptions shall include as a minimum the following information.

       1) Soil symbol
       2) Soil series, textural phase and slope range
       3) Depth to seasonal high water table
       4) Depth to bedrock
       5) Estimated soil productivity group (for the proposed crop rotation)

    Item e - h are required for sites receiving frequent application of sewage sludge

    e. In order to verify the information provided in item d, characterize the soil at each land application site. Representative soil borings or test pits to a depth of five feet or to bedrock if shallower, are to be coordinated for the typifying pedon of each soil series (soil type). Soil descriptions shall include as a minimum the following information:

       1) Soil symbol
       2) Soil series, textural phase and slope range
       3) Depth to seasonal high water table
       4) Depth to bedrock
       5) Estimated soil productivity group (for the proposed crop rotation)

    f. Collect and analyze soil samples from each field, weighted to best represent each of the soil borings performed for

Item e. Using the table below or a separate attachment, provide at least one analysis per sample for each of the following parameters.

Soil Organic Matter (%)	_____
Soil pH (std. units)	_____
Cation Exchange Capacity (meq/100g)	_____
Total Nitrogen (ppm)	_____
Organic Nitrogen (ppm)	_____
Ammonia Nitrogen (ppm)	_____
Nitrate Nitrogen (ppm)	_____
Available Phosphorus (ppm)	_____
Exchangeable Potassium (mg/100g)	_____
Exchangeable Sodium (mg/100g)	_____
Exchangeable Calcium (mg/100g)	_____
Exchangeable Magnesium (mg/100g)	_____
Arsenic (ppm)	_____
Cadmium (ppm)	_____
Copper (ppm)	_____
Lead (ppm)	_____
Mercury (ppm)	_____
Molybdenum (ppm)	_____
Nickel (ppm)	_____
Selenium (ppm)	_____
Zinc (ppm)	_____
Manganese (ppm)	_____
Particle Size Analysis or USDA Textural Estimate (%)	_____

g. Relate the crop nutrient needs to anticipated yields, soil productivity rating and the various fertilizer or nutrient sources from sludge and chemical fertilizers. Describe any specialized agronomic management practices which may be required as a result of high soil pH. If the sludge is expected to possess an unusually high CCE or other unusual properties, provide a description of any plant tissue testing, supplemental fertilization or intensive agronomic management practices which may be necessary.

h. Using a narrative format and referencing any related charts, describe the proposed cropping system. Show how the crop rotation and management will be coordinated with the design of the land application system. Include any supplemental fertilization program, soil testing and the coordination of tillage practices, planting and harvesting schedules and timing of land application.

FACILITY NAME: Alexandria Renew Enterprises VPDES PERMIT NUMBER: VA0025160

SEWAGE SLUDGE APPLICATION AGREEMENT N/A

This sewage sludge application agreement is made on this date _____ between _____, referred to here as "landowner", and _____, referred to here as the "Permittee".

Landowner is the owner of agricultural land shown on the map attached as Exhibit A and designated there as _____ ("landowner's land"). Permittee agrees to apply and landowner agrees to comply with certain permit requirements following application of sewage sludge on landowner's land in amounts and in a manner authorized by VPDES permit number _____ which is held by the Permittee.

Landowner acknowledges that the appropriate application of sewage sludge will be beneficial in providing fertilizer and soil conditioning to the property. Moreover, landowner acknowledges having been expressly advised that, in order to protect public health, the following site restrictions must be adhered to when sewage sludge receives Class B treatment for pathogen reduction:

1. Food crops with harvested parts that touch the sewage sludge/soil mixture and are totally above the land surface shall not be harvested for 14 months after application of sewage sludge;
2. Food crops with harvested parts below the surface of the land shall not be harvested for 20 months after application of sewage sludge when the sewage sludge remains on the land surface for four months or longer prior to incorporation into the soil;
3. Food crops with harvested parts below the surface of the land shall not be harvested for 38 months after application of sewage sludge when the sewage sludge remains on the land surface for less than four months prior to incorporation into the soil;
4. Food crops, feed crops, and fiber crops shall not be harvested for 30 days after application of sewage sludge;
5. Animals shall not be grazed on the land for 30 days after application of sewage sludge;
6. Turf grown on land where sewage sludge is applied shall not be harvested for one year after application of the sewage sludge when the harvested turf is placed on either land with a high potential for public exposure or a lawn, unless otherwise specified by the State Water Control Board;
7. Public access to land with a high potential for public exposure shall be restricted for one year after application of sewage sludge;
8. Public access to land with a low potential for public exposure shall be restricted for 30 days after application of sewage sludge.
9. Tobacco, because it has been shown to accumulate cadmium, should not be grown on landowner's land for three years following the application of sewage sludge borne cadmium equal to or exceeding 0.5 kilograms/hectare (0.45 pounds/acre).

Permittee agrees to notify landowner or landowner's designee of the proposed schedule for sewage sludge application and specifically prior to any particular application to landowner's land. This agreement may be terminated by either party upon written notice to the address specified below.

Landowner:	Permittee:
_____	_____
Signature	Signature
_____	_____
Mailing Address	Mailing Address

FACILITY NAME: Alexandria Renew Enterprises VPDES PERMIT NUMBER: VA0025160

SECTION D. SURFACE DISPOSAL N/A

Complete this section only if you own or operate a surface disposal site. Provide the information for each active sewage sludge unit.

1. Information on Active Sewage Sludge Units.

a. Unit name or number: N/A

b. Unit location

i. Street or Route#: N/A

County: N/A

City or Town: N/A State: N/A Zip: N/A

ii. Latitude: N/A Longitude: N/A

Method of latitude/longitude determination

_____ USGS map _____ Filed survey _____ Other **N/A**

c. Topographic map. Provide a topographic map (or other appropriate map if a topographic map is unavailable) that shows the site location.

d. Total dry metric tons of sewage sludge placed on the active sewage sludge unit per 365-day period:

N/A dry metric tons.

e. Total dry metric tons of sewage sludge placed on the active sewage sludge unit over the life of the unit:

N/A dry metric tons.

f. Does the active sewage sludge unit have a liner with a minimum hydraulic conductivity of 1×10^{-7} cm/sec?

_____ Yes _____ No If "Yes", describe the liner or attach a description. **N/A**

N/A

g. Does the active sewage sludge unit have a leachate collection system? _____ Yes _____ No **N/A**

If "Yes", describe the leachate collection system or attach a description. Also, describe the method used for leachate disposal and provide the numbers of any federal, state or local permits for leachate disposal:

N/A

h. If you answered "No" to either f or g, answer the following: **N/A**

Is the boundary of the active sewage sludge unit less than 150 meters from the property line of the surface disposal site? _____ Yes _____ No If "Yes", provide the actual distance in meters: _____

i. Remaining capacity of active sewage sludge unit, in dry metric tons: _____ dry metric tons **N/A**

Anticipated closure date for active sewage sludge unit, if known: _____ (MM/DD/YYYY)

Provide with this application a copy of any closure plan developed for this active sewage sludge unit.

2. Sewage Sludge from Other Facilities.

Is sewage sludge sent to this active sewage sludge unit from any facilities other than yours? _____ Yes _____ No **N/A**

If "Yes", provide the following information for each such facility, attach additional sheets as necessary.

a. Facility name: N/A

b. Facility contact: N/A

Title: N/A

Phone: (_____) N/A

c. Mailing address:

Street or P.O. Box: N/A

City or Town: N/A State: N/A Zip: N/A

d. List, on this form or an attachment, the facility's VPDES permit number as well as the numbers of all other federal, state or local permits that regulate the facility's sewage sludge management practices:

Permit Number: Type of Permit:

N/A

e. Which class of pathogen reduction is achieved before sewage sludge leaves the other facility?
_____ Class A _____ Class B _____ Neither or unknown **N/A**

f. Describe, on this form or on another sheet of paper, any treatment processes used at the other facility to reduce pathogens in sewage sludge:
N/A

g. Which vector attraction reduction option is achieved before sewage sludge leaves the other facility? **N/A**

_____ Option 1 (Minimum 38 percent reduction in volatile solids)
_____ Option 2 (Anaerobic process, with bench-scale demonstration)
_____ Option 3 (Aerobic process, with bench-scale demonstration)
_____ Option 4 (Specific oxygen uptake rate for aerobically digested sludge)
_____ Option 5 (Aerobic processes plus raised temperature)
_____ Option 6 (Raise pH to 12 and retain at 11.5)
_____ Option 7 (75 percent solids with no unstabilized solids)
_____ Option 8 (90 percent solids with unstabilized solids)
_____ None or unknown

h. Describe, on this form or another sheet of paper, any treatment processes used at the other facility to reduce vector attraction properties of sewage sludge: N/A

i. Describe, on this form or another sheet of paper, any other sewage sludge treatment activities performed by the other facility that are not identified in e - h above: N/A

3. Vector Attraction Reduction. N/A

a. Which vector attraction reduction option, if any, is met when sewage sludge is placed on this active sewage sludge unit?

_____ Option 9 (Injection below land surface)
_____ Option 10 (Incorporation into soil within 6 hours)
_____ Option 11 (Covering active sewage sludge unit daily)

b. Describe, on this form or another sheet of paper, any treatment processes used at the active sewage sludge unit to reduce vector attraction properties of sewage sludge:

4. Ground Water Monitoring. N/A

a. Is ground water monitoring currently conducted at this active sewage sludge unit or are ground water monitoring data otherwise available for this active sewage sludge unit? _____ Yes _____ No

If "Yes", provide a copy of available ground water monitoring data. Also provide a written description of the well

locations, the approximate depth to ground water, and the ground water monitoring procedures used to obtain these data.

b. Has a ground water monitoring program been prepared for this active sewage sludge unit?
_____ Yes _____ No If "Yes", submit a copy of the ground water monitoring program with this application.

c. Have you obtained a certification from a qualified ground water scientist that the aquifer below the active sewage sludge unit has not been contaminated? _____ Yes _____ No

If "Yes", submit a copy of the certification with this application.

5. **Site-Specific Limits.**

Are you seeking site-specific pollutant limits for the sewage sludge placed on the active sewage sludge unit?
_____ Yes _____ No If "Yes", submit information to support the request for site-specific pollutant limits with this application.

Attachment for VPDES
Sewage Sludge Permit Application
Section A. General Information, 5.a

BIOSOLIDS APPLICATION SUMMARY – WET TONS

	2008	2009	2010	2011	2012
ESSEX	9,832	8,912	1,877	3,248	4,267
FAUQUIER	308			1,092	101
GOOCHLAND	265	1,329	2,329		2,393
KING GEORGE		372	911		
KING WILLIAM	314	1,960		1,736	
LOUDOUN	22			315	27
ORANGE		929	947	314	53
WESTMORELAND	1,017				
CAROLINE	316	264	2,779	1,392	
LOUISA	10,098	8,815	8,644	11,970	9,931
KING & QUEEN	185	1,364	2,587	1,491	3,799
RICHMOND	198				
CULPEPPER	22	40			
AMELIA					473
SPOTSYLVANIA			1,454		157
PRINCE GEORGE					53
FREDERICK			53	917	476
FLUVANNA				288	
RIVERSIDE BLENDING		81	237	131	
TOTALS	**22,576**	**24,065**	**21,818**	**22,894**	**21,729**

Alexandria Renew Enterprises

VPDES Permit Application

VA0025160

Public Notice Billing Information

PUBLIC NOTICE BILLING INFORMATION

I hereby authorize the Department of Environmental Quality to have the cost of publishing a public notice billed to the Agent/Department shown below. The public notice will be published once a week for two consecutive weeks in Alexandria Gazette Packet in accordance with 9 VAC 25-31-290.C.2.

VA DEPARTMENT OF ENVIRONMENTAL QUALITY
NORTHERN
OCT 31 2013
REGIONAL OFFICE
WOODBRIDGE, VA

Agent/Department to be billed: Alexandria Renew Enterprises

Owner: Karen L. Pallansch

Agent/Department Address: 1500 Eisenhower Avenue

Alexandria, Virginia 22314

Agent's Telephone No.: (703) 549-3381

Printed Name: Karen L. Pallansch

Authorizing Agent – Signature: Karen Pallansch

Date: 10·31·13

VPDES Permit No. VA0025160
Alexandria Renew Enterprises

APPENDIX A: Example Service Agreement – Distribution System End User

AGREEMENT FOR THE DELIVERY AND USE OF RECLAIMED WATER

THIS AGREEMENT is entered into this_____ day of _____, 20__, between _____ a _____ (the "End User") and ALEXANDRIA SANITATION AUTHORITY d.b.a. "Alexandria Renew Enterprises", a Virginia body politic and corporate (the "Provider").

WITNESSETH:

WHEREAS, the Provider owns, maintains and operates water treatment and reclamation facilities that produce treated effluent that meets or exceeds the water reutilization standards of the Virginia Water Reclamation and Reuse Regulations (the "Reuse Regulations") codified at 9 VAC 25-740-10 et. seq. of the Virginia Administrative Code ("Reclaimed Water"); and

WHEREAS, the Provider is willing to sell and the End User is willing to purchase Reclaimed Water, pursuant to the terms of this Agreement for the Delivery and Use of Reclaimed Water (the "Agreement").

NOW, THEREFORE, in consideration of the foregoing and the mutual covenants contained herein, the Provider and End User do hereby agree as follows:

1. SALE OF RECLAIMED WATER

A. The Provider agrees to sell and deliver to the End User and the End User agrees to purchase and accept from the Provider **[insert specific quantity here in gallons per day]** of Reclaimed Water derived from the Provider's Reclaimed Water production, storage and distribution systems (the "Provider's System").

B. For the remainder of the calendar year following the date on which the Provider begins providing Reclaimed Water to the End User (the "Effective Date"), Reclaimed Water will cost $_____ per thousand gallons (the "Initial Rate") and thereafter at such rate as the Provider may establish and revise from time to time as applicable to all rate payers for Reclaimed Water.

C. On or before January 1 of each year, the Provider shall provide the End User with a copy of that portion of the Provider's adopted budget related to the Provider's System for the succeeding year and a computation of the total estimated cost per thousand gallons of Reclaimed Water expected to be sold to the End User during such year, which amount shall be used for billing purposes during the year.

D. Full payment of all invoices is due within 30 days of the date of issuance. If the End User fails to timely fully pay any of the charges as herein provided, a late payment charge equal to ten percent (10%) of the amount due shall be added to the amount billed and shall be

paid to the Provider by the End User. Failure to fully pay any charge within 60 days of the issuance of an invoice for such charge shall constitute an event of default.

E. The End User's payment to the Provider pursuant to the terms of this Agreement shall not create or constitute any ownership interest or title by the End User in or to any part of the Provider's System.

2. DELIVERY AND DISTRIBUTION OF RECLAIMED WATER

A. The Provider will deliver Reclaimed Water to the End User at the following location(s): **[Insert property address here]**_____ (the "Property"). See **Exhibit A**.

B. The Provider's System shall extend to the volumetric flow meter(s) (the "Point(s) of Delivery"). See **Exhibit A.** The Provider is responsible for operating and maintaining the Provider's System, including those components located on the Property up to and including the Point(s) of Delivery and including the volumetric flow meter(s). The End User shall own, operate, and maintain all those components of the Reclaimed Water delivery system after the flow meter(s) to the point(s) of use. (the "End User's System") (The Provider's System and the End User's System, collectively, shall be the Reclaimed Water System.)

(i) The End User shall provide a positive check-valve between the End User's System and any other non-potable irrigation water source(s). The End User shall be responsible for the cost, installation and complete operation of such check-valve. The End User will provide written notification to the Provider identifying any and all wells or surface water bodies connected to the End User's irrigation system.

(ii) The End User is responsible for constructing all pipes, connections, and appurtenances necessary to obtain Reclaimed Water from the Point of Delivery. Construction shall be in accordance with plans and specifications previously reviewed and approved by the Provider, final copies of which shall be submitted to the Provider for its records no more than thirty (30) calendar days subsequent to completion of construction.

C. All metering facilities installed at the Point(s) of Delivery are and shall remain the property of the Provider; said metering facilities being identified and described as follows:

Metering Location	Meter Size	Meter Number

D. The Provider will operate and maintain all Reclaimed Water metering facilities, including periodic testing thereof; and whenever it determines that replacement of any metering facility is required, it will install, operate and maintain such replacement/new metering facility as may be reasonably required in terms or then current waterworks industry standards for accuracy

so as to insure accurate measurement of the quantities of Reclaimed Water delivered by the Provider to the End User at each delivery location.

E. The aggregate of the quantities of Reclaimed Water delivered by the Provider to the End User as measured by each of the metering facilities that are installed shall be considered to be the total amount of Reclaimed Water delivered by the Provider to the End User during any specified period of time.

F. End User shall grant the Provider easements across and under the Property for the installation, operation, and maintenance of Provider's System pipes and appurtenances up to the Point of Delivery and for access to and inspection of the Reclaimed Water System (the "Easements"). The Deed of Easements is attached hereto as **Exhibit B**, and incorporated by reference and made a part of this Agreement. Upon full execution of the Deed of Easements, it shall be recorded in the land records of the City of Alexandria, Virginia.

G. End User shall provide the Provider with a sworn certificate of ownership and encumbrances regarding the Property. End User is responsible for obtaining and presenting to the Provider, the consent of all owners and mortgagees and any other person with a record interest in the Property [prior to the expiration date of this Agreement and the Easements] as a precondition to receipt of Reclaimed Water Services.

3. TERM OF THE AGREEMENT

A. This Agreement shall be effective upon later of the date first written above or the Effective date defined as the date the End User begins receiving Reclaimed Water from the Provider.

4. USE OF RECLAIMED WATER

A. End User shall use the Reclaimed Water for the following non-potable reuse purposes categorized in the Virginia Reuse Regulations (9 VAC 25-740-90) and in a manner consistent with all federal, state, and local regulations: **[Reclaimed water intended use to be inserted here]**.

B. Not less than one hundred twenty calendar (120) days prior to the anticipated date of initiating additional reuses not identified in the Agreement, End User shall provide a written request for approval to the Provider. The Provider shall review these proposed additional uses and may disapprove any proposed use. End User shall not initiate proposed additional water reuses until an amended copy of this Agreement is received from the Provider which documents the additional uses.

C. If End User proposes to use Reclaimed Water for other reuses including: agriculture, sports facility irrigation, or water features/aesthetic uses, then the following conditions apply:

(i) Treatment requirements more stringent than those required in the Virginia Reuse Regulations shall be agreed upon by the Provider and End User for other uses not

identified elsewhere in this Agreement. Any additional Reclaimed Water quality limits and treatment requirements for other specified uses will be identified in **Exhibit C**.

(ii) Color and odor limits may be agreed upon by the Provider and End User for other specified uses not identified elsewhere in this Agreement. Any additional color and odor limits for other uses will be identified in **Exhibit C**.

D. The Provider retains the right to terminate Reclaimed Water service immediately terminate and without prior written notice upon its determination that the End User has implemented unapproved uses of Reclaimed Water that may present a public health hazard, or are in violation of federal, state, or local regulations.

5. QUALITY OF RECLAIMED WATER SUPPLY

A. The Provider shall produce and supply Reclaimed Water of a quality that meets the standards of Reuse Regulations applicable for the End User's approved proposed uses outlined in Section 4A and any amendments thereto.

B. The Provider makes no other warranty, and specifically makes no implied warranty, of merchantability or of fitness of the Reclaimed Water for any particular reuse or purpose. Specifically, the Provider makes no representation concerning productivity of properties irrigated with Reclaimed Water, or potential changes to the land, crops, or vegetation. Further, any plans, specifications, water quality analysis, or reclaimed wastewater sampling will serve to merely indicate the general quality of Reclaimed Water that will be delivered to the End User. Such plans, specifications, water quality analyses or treated water samples create no warranty that the Reclaimed Water delivered by the Provider will conform to these samples.

C. In the event of Reclaimed Water quality deterioration, the Provider will inform the End User as soon as practicable after the Provider identifies such deterioration and will discontinue delivery of Reclaimed Water until the quality is restored to level required by the Reuse Regulations.

6. SERVICE DISRUPTION AND NOTIFICATION

A. The Provider shall provide the End User forty-eight (48) hours advanced notification for any planned service disruption.

B. The End User shall provide the Provider 48 hours advanced notification of any planned service disruption.

C. The End User shall notify the Provider of any unplanned service disruption within 2 hours of its occurrence.

D. If circumstances beyond the Provider's control prevent the full or partial delivery of Reclaimed Water as provided herein, the Provider shall promptly notify the End User by telephone and shall follow up with a letter stating the reason for the interruption of service and the anticipated duration.

E. The End User may reduce the quantity of Reclaimed Water used to match its reduced needs or to accommodate such unforeseen circumstances provided that, if the End User's reduced needs will extend for a period of twenty (20) days or more, the End User shall provide a written notice to the Provider of its reduced needs at least seven (7) calendar days prior to initiating the reduction.

F. The End User may draw additional Reclaimed Water, subject to availability of the Provider's Reclaimed Water supplies, to the maximum amount specified in Section 1.A. The Provider shall furnish only such Reclaimed Water as its determines in its sole discretion that the Reclaimed Water system can safely reclaim, transmit or delivery. The Provider assumes no responsibility or obligations with respect to water pressure or continuous feed of water except herein as stated.

7. CROSS-CONNECTION AND BACKFLOW PREVENTION

A. Direct cross-connections between the End User's System and any potable water supply system are not permitted.

B. The End User's System shall be in compliance with the cross-connection control and backflow prevention requirements of the Virginia Waterworks Regulations (12 VAC 5-590-580 et seq.), the Uniform Statewide Building Code, the Provider's Cross Connection/Backflow Prevention Program, and local building and plumbing codes.

C. End User may utilize potable water as a supplementary reuse source, provided there are no announced legal restrictions on such use, and there is an air gap separation of at least eight (8) inches, or twice the pipe diameter, whichever is greater, between the potable water and the Reclaimed Water or a reduced pressure principle backflow prevention device installed at the potable service connection to the reuse.

D. End User shall bear the cost of all backflow prevention devices in the End User's System. The Provider takes no responsibility for the operation and maintenance of the backflow prevention device(s).

8. DELIVERY SYSTEM DESIGN CRITERIA

The design and construction of the End User's System shall comply with the Reuse Regulations and the Sewage Collection and Treatment Regulations ("SCAT Regulations") of the Virginia Administrative Code.

9. CONSTRUCTION, OPERATION AND MAINTENANCE

A. End User will take all reasonable precautions, including signs and labeling, to clearly identify Reclaimed Water systems to prevent inadvertent human consumption.

B. The End User shall prepare an operations and maintenance manual for its System, which shall include, at a minimum, the following:

(i) A description of all components of the End User's System and step-by-step instructions for operation of specific mechanical components.

(ii) Routine maintenance and schedules of maintenance for all components of the End User's System.

(iii) Procedures to handle and dispose of any wastes or wastewater generated by maintenance of the delivery system in a manner protective of the environment.

C. The End User shall grant access to the Provider to perform routine and unplanned inspections of the End User's System, including required inspections for the cross-connection and backflow prevention system program as specified in 9 VAC 25-740-100.C.1.g. of the Reuse Regulations, as amended. The Provider shall have the ability to take notes, make sketches, and take photographs as necessary to document the condition of the Reclaimed Water system during inspection. Records of inspections shall be kept on file at the Provider.

D. End User shall contact the Provider immediately if its System is unable to accept Reclaimed Water.

E. The End User shall ensure that all necessary personnel are trained and familiar with the proper operation and maintenance of the End User's System.

F. The End User shall comply with all applicable operations and regulatory requirements as required by the Virginia Reuse Regulations, Section 9 VAC 25-740-160, or SCAT regulations and/or any local, state, or federal regulations in the construction, operations, and maintenance of the End User's System.

10. ADVISORY SIGNS

Signage shall be posted, as required by Section 9 VAC 25-740-160 of the Virginia Reuse Regulations, to ensure proper use of Reclaimed Water and to protect the health and safety of the general public. Signage shall be kept in appropriate condition so that the signs are legible and free of debris, vandalism, etc. The Provider may require the End User to post additional signage or replace existing signage if deemed necessary.

11. STORAGE

If required by Section 9 VAC 25-740-110 of the Virginia Reuse Regulations, the End User is required to own, operate, and maintain the End User's Reclaimed Water storage facilities.

12. RECORD KEEPING

The End User shall maintain and submit adequate records in accordance with 9 VAC 740-190 of the Reuse Regulations. Failure to submit and maintain required records could result in termination of service by the Provider.

13. IRRIGATION

A. If End User is providing bulk irrigation supply, the Provider may from time to time require rate controls and supply schedules to maintain adequate supply and pressures during periods of peak demands.

14. EARLY TERMINATION OR ASSIGNMENT

A. The Provider retains the right to terminate this Agreement at any time, including for any violations of this Agreement or of federal, state, or local regulations pertaining to the approved use and management of Reclaimed Water. The Provider will provide written notification of service termination to the End User thirty (30) days prior to termination of this Agreement.

B. This Agreement may not be assigned by the End User without the prior written consent of the Provider.

15. EXCUSE FROM PERFORMANCE BY GOVERNMENTAL ACTS

If for any reason during the term of this Agreement, local, state, or federal governments or agencies fail to issue necessary permits, fail to grant necessary approvals, or shall require any change in the operation of the treatment, transmission and distribution systems for Reclaimed Water or the application and use of Reclaimed Water provided by the Provider, then to the extent that such requirements shall affect the ability of any party to perform any of the terms of this Agreement, the affected party shall be excused from the performance thereof and a new Agreement shall be negotiated by the parties in conformity with such permits, approvals, or requirements.

16. TRANSFER OR MODIFICATION OF END USER'S COMMITMENT

End User's right to alienate or encumber the land described in **Exhibit B** shall not be restricted by this Agreement, except that End User shall give the Provider written notice of any proposed sale or transfer at least thirty (30) days prior to the sale or transfer.

17. DEFAULT

The following events shall constitute events of default under this Agreement:

A. Except as provided in Section 1F, if End User fails to keep, perform, or abide by any other term, condition, or covenant of this Agreement to be performed or observed. and does not cure such default within thirty (30) days after written notice thereof, or, if such default cannot be cured in such period, does not within thirty (30) days commence with diligence and dispatch such act or acts as shall be necessary to cure the default and shall not cure such default within a reasonable time; or

B. If any default shall occur under the terms of any agreement between the parties for potable water service or sanitary sewer service.

18. REMEDIES FOR DEFAULT

A. In the event of a default, at any time thereafter the non-defaulting party may terminate this Agreement by giving at least ten (10) days prior written notice (the "Notice of Termination") to the defaulting party and this Agreement shall terminate after the date of such notice.

B. Additionally, the Provider may, without terminating this Agreement, suspend Reclaimed Water service to End User upon ten (10) days written notice. Such suspension may continue for the period specified in the notice or until such time as the End User has corrected any breach of this Agreement to the satisfaction of the Provider. At the end of the period of suspended service, if the End User has not corrected the breach, the Provider may terminate this Agreement upon ten (10) days written notice to End User.

C. The non-defaulting party also has rights and remedies that may exist under law. All rights and remedies may be exercised successively or concurrently.

D. The sole and exclusive jurisdiction for any litigation arising from or relation to this Agreement shall be in the City of Alexandria, Commonwealth of Virginia.

19. ACCESS

The Provider shall have the right, at all reasonable times, to enter upon the Property to review and inspect the End User's System and/or the Provider's System Reclaimed Water facilities and operations with respect to the conditions agreed upon herein.

20. DISCLAIMER OF THIRD PARTY BENEFICIARIES

This Agreement is solely for the benefit of the parties hereto and no right or cause of action shall accrue to, upon or by reason hereto or for the benefit of any third party not a party hereto.

21. SEVERABILITY

If any part of this Agreement is found invalid or unenforceable by any court, such invalidity or unenforceability shall not affect the other parts of this Agreement if the rights and obligations of the parties contained therein are not materially prejudiced and if the intentions of the parties can continue to be effective. To that end, this Agreement is declared to be severable.

22. BINDING UPON SUCCESSORS

This Agreement shall be binding upon and shall inure to the benefit of the successors or assigns of the parties hereto. The terms and obligations of this Agreement shall run with the land referenced in **Exhibit B** attached hereto.

23. APPLICABLE LAW

This Agreement and the provisions contained herein shall be construed, controlled, and interpreted according to the laws of the Commonwealth of Virginia.

24. NOTICES

Unless otherwise specified in this Agreement, all notices or requests shall be in writing and shall be given by hand delivery or certified mail, return receipt requested, postage prepaid, addressed as follows:

If to the Provider:	With copies to:
Alexandria Renew Enterprises Attn: Karen Pallansch, CEO 1500 Eisenhower Avenue Alexandria, VA 22314 (703) 549-3381	McGuire Woods Attn: Jonathan Rak 1750 Tysons Boulevard, Suite 1800 McLean, VA 22102 (703) 712-5000

or to such other persons and places as the parties may specify by notice. The effective date of any notice or request shall be the date of receipt if delivered by hand, or the postmarked date thereof.

If to the End User:	With a copy to:
[Place name, address, and phone number here]	**[Place name, address, and phone number here]**

25. ENTIRE AGREEMENT

This Agreement constitutes the entire agreement between the parties. End User agrees to abide by the provisions of the Alexandria Renew Enterprises Water Rules, Rates and Regulations and any policies and procedures which may address Reclaimed Water. Except as may be provided by Alexandria Renew Enterprises Water Rules, Rates and Regulations, policies or procedures, modifications to and waivers of the provisions herein shall not be binding unless made in writing and signed by the parties hereto.

IN WITNESS WHEREOF, the parties hereto have set their hands and seals on the date first above written.

ATTEST:

END USER,

ATTEST:

ALEXANDRIA RENEW ENTERPRISES,

By:

Chief Executive Officer

EXHIBIT A

LOCATION OF CUSTOMER'S PROPERTY AND POINT(S) OF DELIVERY

EXHIBIT B

EASEMENT SKETCH AND LEGAL DESCRIPTION

EXHIBIT C
[This Exhibit shall be completed as it pertains to each Customer]

RECLAIMED WATER - ADDITIONAL REQUIREMENTS

1. The Provider agrees to provide Reclaimed Water that meets the flowing additional water quality criteria as measured at the regulatory point of compliance for the Alexandria Renew Enterprises Reclaimed Water System:

PARAMETER	MONTHLY AVG LIMIT	SAMPLE TYPE	FREQUENCY OF MEASUREMENT
E. Coli	≤11 colonies/100mL	Grab	1/day
pH	6 to 9 S.U.	Grab	1/day
$CBOD_5$	≤8 mg/L	Composite	1/day
Turbidity	≤2 NTU	Online	Continuous