VPA Permit Fact Sheet

This document gives pertinent information concerning the issuance of VPA Permit No. VPA01423. The permit regulates the land application of municipal wastewater generated at a sequencing batch reactor wastwater plant.

1. Facility Name and Address: Coles Point Wastewater Treatment Plant
2585 Coles Point Road
Hague, Va. 22469

Legal Name and Address of Owner: Westmoreland County
P.O. Box 1000
Montross, Va. 22520

2. Location of Pollution Management Activity: Coles Point , Viriginia.
2585 Coles Point Road
Hague, Va. 22469

3. Facility Contact: Norm Risavi, County Administrator
(804) 493-0113

4. Permit Drafted By: Mosca - PRO/KO Date: July 3, 2003
Site Inspection: Mosca – PRO/KO Date: September 25, 2002
Application Checklist: Mosca Date: November 16, 2002

Reviewed By: Curt Linderman, PRO (8-11-03, 8-29-03, 9-8-03), James Golden, PRO (7-7-03), Allan Brockenbrough, OWPS (8-7-03)

5. Permit Characterization: SIC Code: 4952

Permit Type	Facility	Permit Action
( ) Existing Facility	(x) Municipal	(x) Issuance
(x) Proposed Facility	( ) Industrial	( ) Reissuance
(X) Land Application:	( ) Conc. Animal Feeding	( ) Modification
( ) Frequent	( ) Inten. Animal Feed	( ) NDC Conversion
(x) Infrequent	( ) Other Animal	( ) Inter. Authorization
(X) Land App. Wastewater	( ) Aquaculture	( ) Enforcement Action
( ) Other:		( ) Revoke and Reissue

6. Statutory or Regulatory Basis for Special Conditions and Monitoring Requirements:

(X) State Water Control Law
(X) 9 VAC VR 680-14-01 Permit Regulation
(X) Water Quality Standards (Surface and Groundwater Monitoring)
(X) Agency Guidance - VPA Manual

7. Application Information:

Application Submitted By: Norm Risavi, County Administrator

Additional Information:	Requested:	Received:
		5-29-02
	6-27-02	7-24-02
	8-7-02	9-3-02
	11-22-02	2-5-03
	3-21-03	4-11-03

Application Complete Date: Administratively complete 9-16-02, Technically complete July 10, 2003 (approval of NMP)

8. Pollution Management Activity Description:

The pollutant management activities involve the land application of wastewater from a sequencing batch reactor. The average estimated daily flow projected out 20 years is 81,430 gpd for the summer, 49285 gpd for the winter months. The treated wastewater will be sprayed onto property at agronomic rates in Coles Point consisting of 50.4 acres with a reserve area of 12.6 acres. Reed Canary grass will be grown as a crop. Fixed irrigation will be utilized; Rainbird 46H spray heads will be placed at equilateral distances of 80 ft. Bolted steel tanks, 3 MG each, have been substituted for lagoons originally proposed for wastewater storage. Because of the impermeability of the construction, groundwater wells have not been required around the wastewater storage area. Six groundwater wells have been installed at the spray irrigation site and six sets of background analyses have been collected to date.

9. Licensed Operator Requirements: Class III

10. Facility Reliability Class: Class I

11. Facility Location: Coles Point, Va.

12. Permit Special Conditions: Rationale

B.1. No-discharge provision. 9 VAC 25-32-30 establishes a no-discharge status for VPA permits except in the case of a storm event greater than the 25 year-24 hour storm event.

B.2 Materials Handling/Storage. 9 VAC 25-32-30 prohibits the discharge of any wastes into State waters unless authorized by permit. State Water Control Law § 62.1-44.18:2 authorizes the Board to prohibit any waste discharge which would threaten public health or safety, interfere with or be incompatible with treatment works or water use. Section 301 of the Clean Water Act prohibits the discharge of any pollutant unless it complies with specific sections of the Act.

B.3. Indirect Dischargers. Required by the VPDES permit regulation, 9VAC 25-31-200 B 1 for all POTWs and PVOTWs that receive waste from someone other than the owner of the treatment works. This requirement is for the owner to notify DEQ in the event waste is accepted from any other source than the owner.

B.4. Effluent restricted to sites in Attachment A and maintenance of cover crop to application areas This condition restricts the spray irrigation to those sites identified in the application and was modified from the permit manual boilerplate to include a clarification that the establishment of the cover crop shall be in conformance with the NMP. The maintenance of a cover crop to application areas is to avoid application to bare ground to prevent runoff. OWRM (now OWPS) Guidance memo 94-002. This condition is intended to prevent the application of effluent to bare ground. This condition is intended to prevent the application of effluent to bare ground.

B.5. Operation and Maintenance Manual Requirement. 9 VAC 25-32-80 and 40 CFR 122.41(e) require proper operation and maintenance of the permitted facility. Compliance with an

H:\940240- .27\FIG2A.PRO

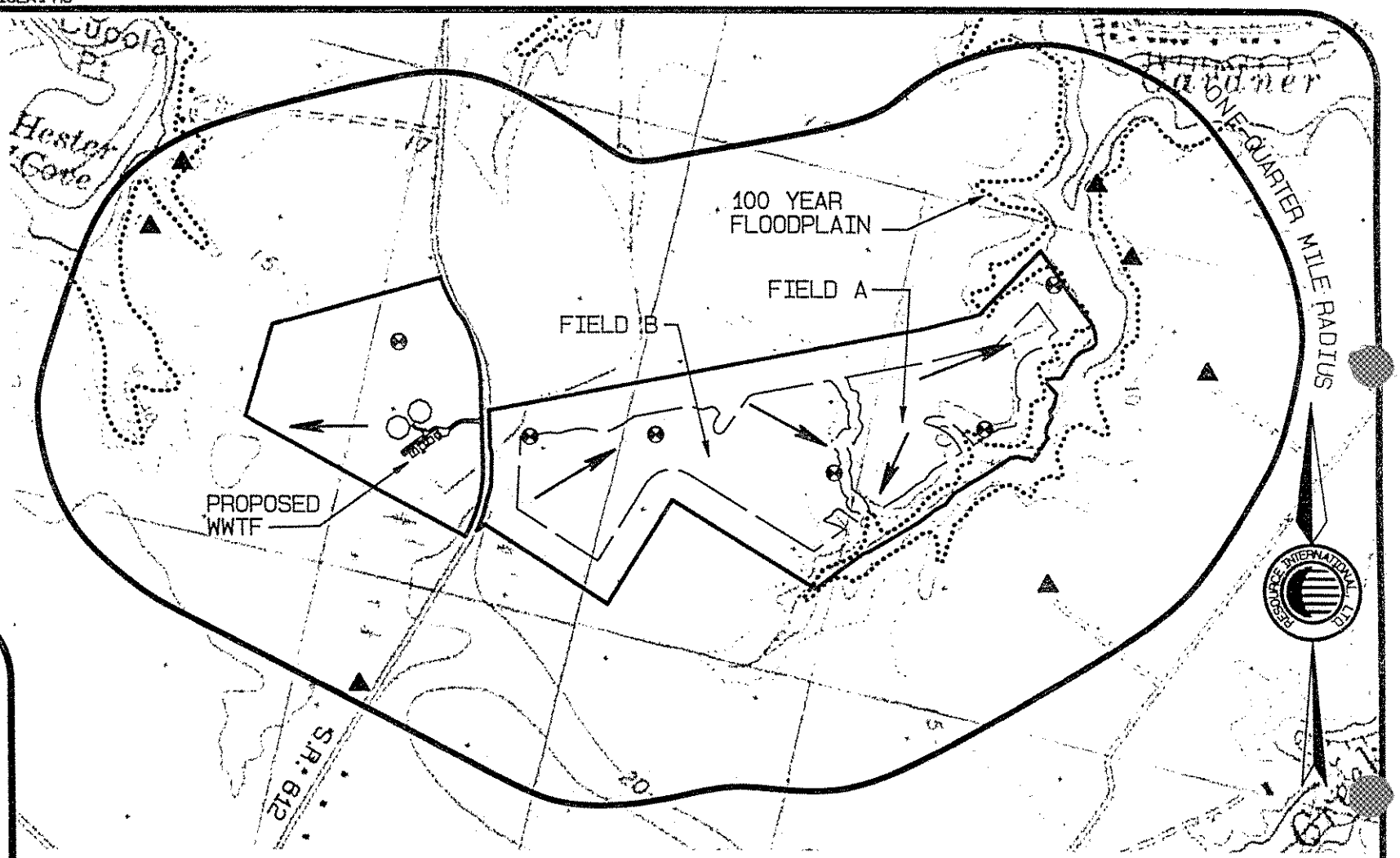

FIGURE 2A
MODIFIED VICINITY MAP
COLES POINT WASTWATER TREATMENT FACILITY
WESTMORELAND COUNTY, VIRGINIA

THE FOLLOWING FEATURES DO NOT EXIST WITHIN THE SUBJECT AREA:
- SPRINGS
- PUBLIC WATER SUPPLY (S)
- SINKHOLES
- UNDERGROUND AND/OR SURFACE MINES
- MINE POOL (OR OTHER) SURFACE WATER DISCHARGE POINTS
- MINING SPOIL PILES AND MINE DUMPS
- QUARRY (S)
- SAND AND GRAVEL PITS
- GAS AND OIL WELLS
- DIVERSION DITCH (S)
- AGRICULTURAL DRAINAGE DITCH (S)
- LANDFILLS OR DUMPS
- OTHER UNLINED IMPOUNDMENTS
- INJECTION WELLS
- ROCK OUTCROPS

NOTE: FIELD "A" CONTAINS SECTIONS 3A ND 3B. FIELD "B" CONTAINS SECTIONS 1A, 1B, 2A AND 2B.

SOURCE:
U.S.G.S. 7.5 MINUTE SERIES QUADRANGLES
KINSALE AND MACHODOC
SCALE: 1" = 1,000'

LEGEND
- PROPERTY BOUNDARY
- FIELD BOUNDARY
- 100 YEAR FLOODPLAIN
- GROUNDWATER FLOW DIRECTION
- GROUNDWATER MONITORING WELLS
- APPROXIMATE LOCATION OF DWELLINGS WITH WELLS AND SEPTIC SYSTEMS

RESOURCE INTERNATIONAL, LTD.
ENGINEERS • SCIENTISTS • SURVEYORS • PLANNERS
P.O. BOX 6160 • 9560 KINGS CHARTER DRIVE • ASHLAND, VA 23005
(804) 550-9200 • FAX (804) 550-9269

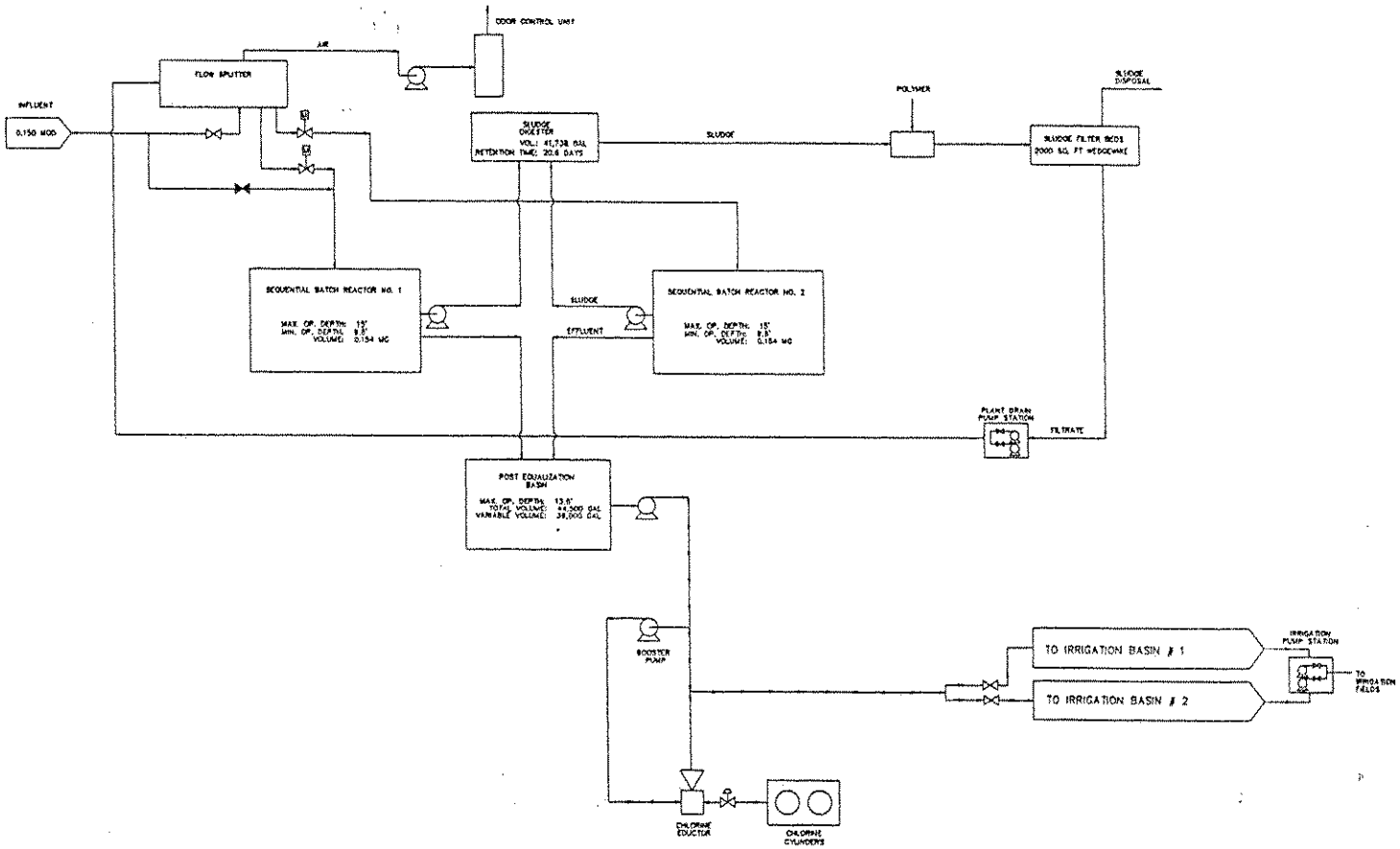

LEGEND

- SUMP PUMP
- VALVE, NORMALLY OPEN
- VALVE NORMALLY CLOSED
- CHECK VALVE
- PRESSURE INDICATOR
- CONTROL VALVE
- MOTORIZED VALVE

OVERALL PROCESS FLOW DIAGRAM

VPA Permit No. VPA0142
Page 28 of 6

RESOURCE INTERNATIONAL, LTD.
ENGINEERS • SCIENTISTS • SURVEYORS • PLANNERS
P.O. BOX 6180 • 8566 SENECA CHARTER DRIVE • ASHLAND, VA 23005
(804) 550-8000 FAX (804) 550-8058

CHARLES D. BRIDGEWATER
LICENSED PROFESSIONAL ENGINEER
VIRGINIA
12310

REVISIONS:
9-7-2001 GENERAL REVISIONS

DESIGNED: DWW
DRAWN: WAW
CHECKED: T
DATE: 6-2001
AS NOTED

WESTMORELAND COUNTY

COLES POINT WASTE WATER TREATMENT FACILITY
WESTMORELAND COUNTY, VIRGINIA
CONSTRUCTION DRAWINGS

PROJECT NO.
94024.27

SHEET
M-1

approved O&M manual ensures this. Section 401 of the Clean Water Act requires the permittee to provide opportunity for the State to review the proposed operations of the facility. Clarification to the permit manual boilerplate was made for approval of the manual prior to start-up of operations. The special condition for the development of a sludge management plan was added as a sub-condition to this special condition for the O&M manual. Sludge Management Plan. VPDES Permit Regulation 9 VAC 25-31-100 J, 220 B 2, and 420 through 720, and 40 CFR Part 503 require all sewage treatment plants to submit information on their sludge use and disposal practices and to meet specified standards for sludge use and disposal. Technical requirements are derived from the Department of Health's Biosolids Use Regulations, 12 VAC 5-585-10 et seq.

B.6. Nutrient Management Plan Update no later than every 3 years and Nutrient Management Plan (NMP) included in O&M. These requirements are based on the VPA Permit Manual, current guidance, and DCR recommendations. The nutrient management plan is to be included as part of the O&M manual and approved in accordance with the O&M manual approval process. However, any increase in the amount of land application area cited within or outside of the NMP must go through a public participation process, i.e., a major modification, which includes a permit fee.

B.7. Soil Moisture Monitoring Plan. This requirement is based on the VPA Permit Manual, current guidance, and DCR recommendations.

B.8. Soil moisture sensor readings. This requirement is based on the VPA Permit Manual, current guidance, and DCR recommendations.

B.9. Harvest of Reed Canary Grass in accordance with O&M manual--OWRM (now OWPS) Guidance memo 93-023.

B.10. Cation Imbalance Plan. This requirement is based on the VPA Permit Manual, and current guidance.

B.11. Irrigation Scheduling Requirement: This requirement is based on the VPA Permit Manual and current guidance.

B.12. Reserve Area: The requirement to have a reserve area equal to 25% of the size of the sprayfield that can be placed into service within 30 days is based on the SCAT regulation and current DEQ guidance.

B.13. Winter application: This requirement is based on the SCAT regulation and current guidance.

B.14. Effluent not to be applied at rates that exceed the approved SMMP and the NMP. This requirement is based on the VPA Permit Manual, current guidance, and DCR guidance.

B.15. Buffer zones. This requirement is based on the VPA Permit Manual and current guidance.

B.16. Requirement for operator. This requirement is based on the VPA Permit Manual, and current guidance.

B.17. Operational limitations. This requirement is based on the VPA Permit Manual, current guidance, and DCR guidance.

B.18. 30 day separation from application and crop utilization. This requirement is based on the VPA Permit Manual and current guidance.

B.19. Crops not to be consumed by man after irrigation. This requirement is based on the VPA Permit Manual and current guidance

B.20. Monthly summary report. Required by VPA manual and current guidance.

B.21. Annual Summary Report. Required by VPA manual and current guidance.

B.22. Freeboard requirement. The 2 ft. freeboard is required by the VPA manual.

B.23. Total PAN Restriction. VPA manual restricts the applied PAN from all sources not to exceed the allowable crop nitrogen uptake. Use of this system is expected to be conservative for the spray irrigation of wastewater. This condition was modified for the documentation of total phosphorus and total potassium from the wastewater and all additional source.

B.24. Use of Reserve Area. A condition whereby DEQ is notified when influent flows to the treatment facility approach the design flow is required by the VPDES Permit Regulation, 9 VAC 25-31-200 B for all POTW and PVOTW permits. This condition was adapted from the VPDES permit manual for this VPA permit because of the need for notification of DEQ if flows became a problem at the site. The use of the reserve site for three consecutive months was identified as the prompt for action.

B.25. Requirement for CTC/CTO. Required by Code of Virginia at 62.1-44.19; Sewerage Regulations 9 VAC 25-60-120 and 280, and VPDES Permit Regulation, 9 VAC 25-31-190 E.

B.26. Facilities Closure Plan upon termination of activities. OWRM (now OWPS) Guidance memo 94-002.

B.27 Endangered or Threatened Species: This requirement is based on both the VPDES and the VPA Permit Manuals and current guidance. Bald eagle nests are located at the site.

B.28. New Dischargers which are permitted from Form 2D: The permit limitations are based on assumed effluent quality characteristics when application Form 2D is used. These assumptions (and the permit basis) can only be validated with actual effluent data. The submission of actual data is required in the application form instructions. A new series of site life calculations is also required.

Monitoring Requirements:

Wastewater monitoring is necessary at a facility with land application of wastewater, to know the nutrient value of the wastewater being applied to the field crop. If the nutrient value of the wastewater is less than that required by the crop, then pollutants will not migrate off-site. The wastewater parameters selected for monitoring were those detailed in DEQ Guidance Memo 94-002 Regional Directors' Authorization to Process VPA Permits for Land Application of Municipal Wastewater. Alkalinity was added to the monitoring list in accordance with the VPA Permit Manual. The metals form of Total Recoverable in wastewater, groundwater and soils monitoring was chosen for comparability.

Soil monitoring is necessary to ensure the viability of the land application system. The parameters chosen for monitoring are those recommended by OWRM (now OWPS) Guidance memo 94-002 for a facility land applying wastewater. Ammonia nitrogen is suggested in the VPA manual and not in 94-002, but added for completeness and comparability to other data sets for the other media.

Groundwater Monitoring is required at the application site. Piedmont Regional Office policy requires groundwater monitoring at all land application sites. The VPA draft technical manual also recommends groundwater monitoring at wastewater application sites. The parameters selected are

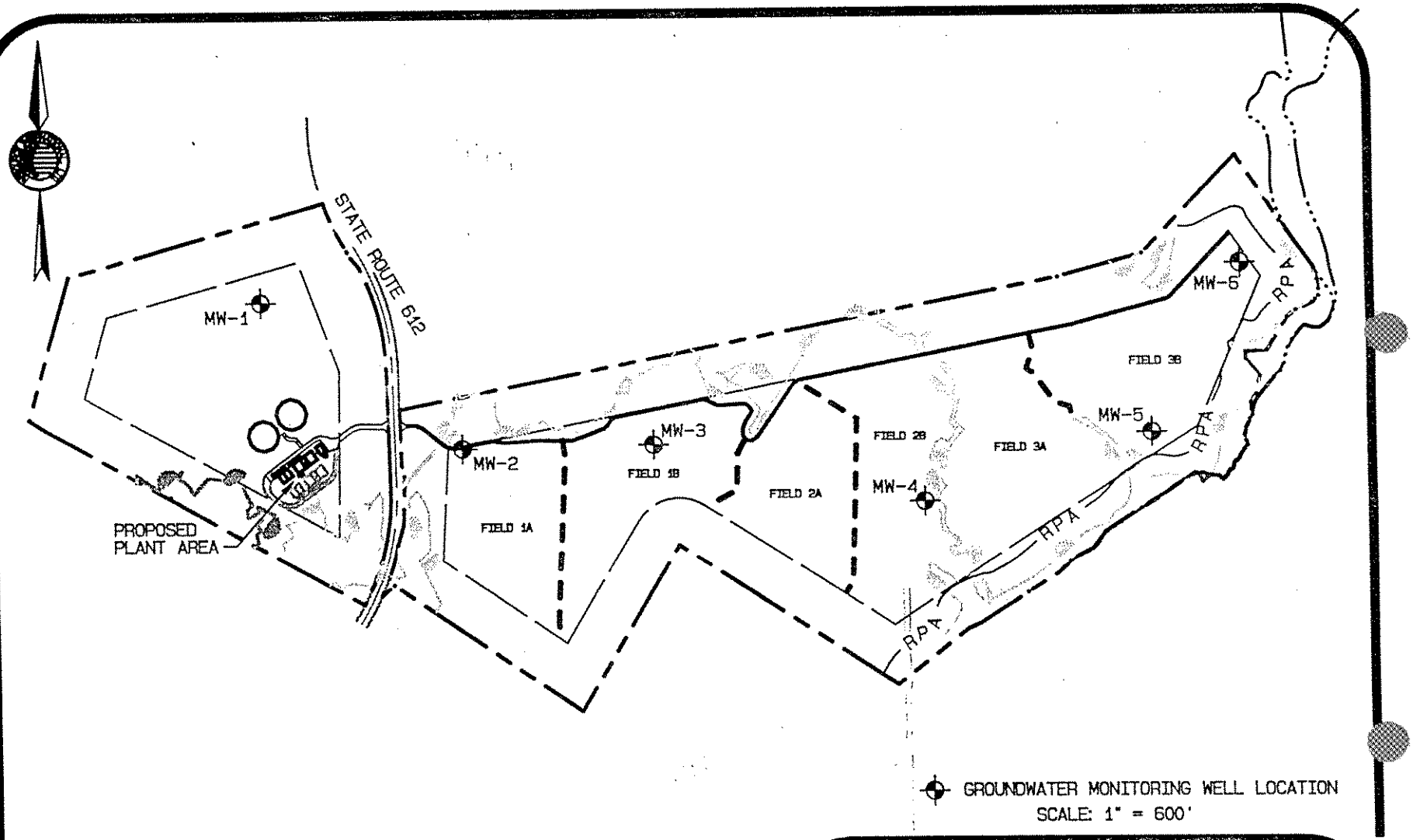

FIGURE 1
GROUNDWATER MONITORING WELL LOCATION MAP
COLES POINT WASTERWATER TREATMENT FACILITY
WESTMORELAND COUNTY, VIRGINIA

RESOURCE
INTERNATIONAL, LTD.
ENGINEERS ◇ SCIENTISTS ◇ SURVEYORS ◇ PLANNERS
P.O. BOX 6160 ◇ 9560 KINGS CHARTER DRIVE ◇ ASHLAND, VA 23005
(804) 550-9200 ◇ FAX (804) 550-9259

H:\94024-01.27\WELLFIG.PRO

Page 4A of 6

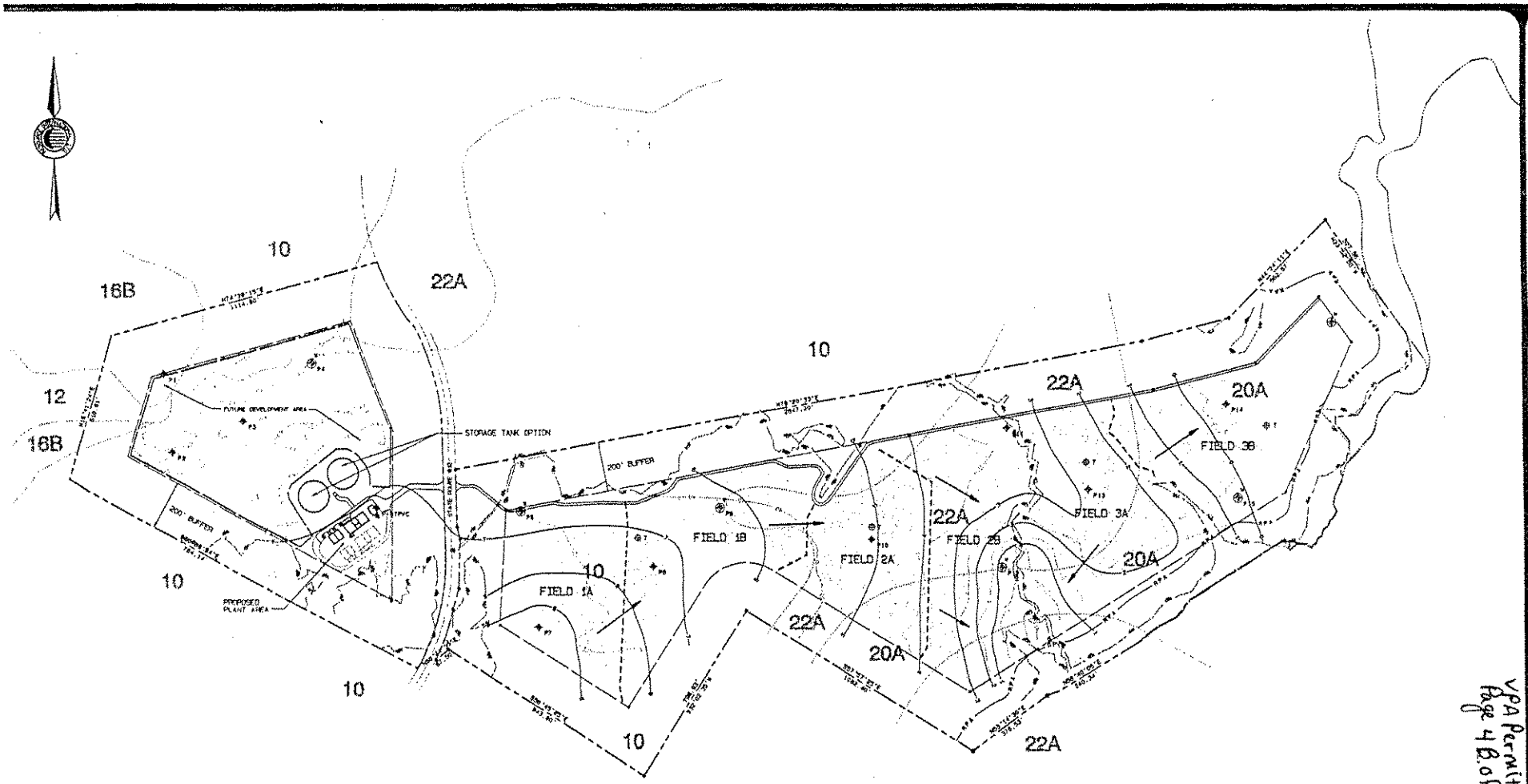

LEGEND

- PROPERTY LINE
- EXISTING ROAD
- PROPOSED ROAD
- EXISTING WETLAND
- BUFFER
- SOIL LIMITS BOUNDARY
- STREAM/ EDGE OF WATER
- EXISTING SURFACE CONTOUR
- RPA — RPA — RESOURCE PROTECTION AREA (RPA)
- SOIL BORING
- PROPOSED GROUNDWATER MONITORING WELL AT LOCATION OF EXISTING POTENTIOMETER
- PROPOSED GROUNDWATER MONITORING WELL
- PROPOSED TENSIOMETER LOCATION
- GROUNDWATER CONTOUR BASED ON POTENTIOMETER READING 7-10-2002

NOTE: THE SOIL BORINGS ON THIS SHEET WERE MADE BY EARTH TECH, INC.

SOILS INDEX

10 - LUMBEE LOAM
12 - HANSEMOND FINE SANDY LOAM
16B - RUMFORD FINE SANDY LOAM, 0% TO 8% SLOPE
20A - STATE FINE SANDY LOAM, 0% TO 2% SLOPES
22A - TETOTUM LOAM, 0% TO 2% SLOPES

SOURCE SOIL SURVEY OF WESTMORELAND, U.S. DEPARTMENT OF AGRICULTURE SOIL CONSERVATION SERVICE, 1979.

200 0 100 200 400 800
(IN FEET)
1" = 200'

VPA Permit No. VPA01423
Page 4B of 6

RESOURCE INTERNATIONAL, LTD.
ENGINEERS • SCIENTISTS • SURVEYORS • PLANNERS

REVISIONS:

DESIGNED: BMW/DJP
DR: SB
CHK: CDR
DATE: 7-25-2002

WESTMORELAND COUNTY
COLES POINT WASTEWATER TREATMENT PLANT

PROJECT NO. 94024.2

SHEET FIGURE

those recommended by OWRM (now OWPS) Guidance memo 94-002 for a facility land applying wastewater; the same parameters that are recommended in the SCAT regulations. Manganese was added to the list of parameters to be monitored (to address corresponding GW standards from 9 VAC 25-260-210).

Surfacewater Monitoring is required to ensure that no runoff occurs from the site. The VPA manual recommends surface water monitoring at land application sites. The parameters included on the monitoring list are selected from the VPA permit manual. Sulfate is added to the list as high levels may be seen from commercial fertilizers, and may help to pinpoint a source of pollutants seen in the monitoring.

Public Notice: The draft permit will be public noticed in the Westmoreland News. Public Notice Information required by 9 VAC 25-31-280 B:

Comment period: Date of first publication: September 17, 2003 End date: October 20, 2003

All pertinent information is on file and may be inspected and copied by contacting Denise M. Mosca at Virginia DEQ Kilmarnock Office, P.O. Box 669, Kilmarnock, Va. 22482. (804) 435-3181 e-mail address: dmmosca@deq.state.va.us

Persons may comment in writing or by e-mail to the DEQ on the proposed issuance of the permit and may request a public hearing during the comment period. Written or email comments shall include the name, address and telephone number of the writer, and shall contain a complete, concise statement of the factual basis for comments. Only those comments received within this period will be considered. The DEQ may decide to hold a public hearing if public response is significant. Requests for public hearings shall state the reason why a hearing is requested, the nature of the issues proposed to be raised in the public hearing and a brief explanation of how the requester's interests would be directly and adversely affected by the proposed permit action.

Following the comment period, the Board will make a determination regarding the proposed issuance. This determination will be come effective, unless the DEQ grants a public hearing. Due notice of any public hearing will be given.

Attachments: Topo map/Site Diagram
Flow Diagram
Groundwater Monitoring Well Location Map
Facility Location Map

Permit Processing Change Sheet – Monitoring Requirements					
Monitoring	Parameter Changed	Requirement Changed From	Requirement Changed To	Rationale	Initials and Date

Permit Processing Changes - Special Conditions

1.A. 1.Wastewater monitoring. The TKN analysis requirement prior to the storage ponds was eliminated as it is sufficiently addressed through the TKN monitoring after storage.
1.A.1. Wastewater monitoring. The sample type was clarified to reflect the size of the WWTP from the recommendation in the VPDES permit manual (changed 24HC to 8HC).
1.A.1. The overall design flow of the land treatment system is as specified in the approved and current NMP (changed from "is to be determined.")
1.A.2. The footnote "d" was made consistent with preceding page.
1.A.4. p. 4 Land Application monitoring. The footnote on the PAN parameter should be "b," not c. Reference to the special condition was verified. For the phosphorus parameter, reference to a special condition, implying a limit, was dropped, and denoted "NL." For the potassium parameter, reference to a special condition, implying a limit, was dropped, and denoted "NL." In item a, second line, a word seemed to be missing. The words "and the" were deleted as an artifact.
1.A.4. Hydraulic Conductivity parameter – Resource correctly pointed out that a composite sample for Hydraulic conductivity is not appropriate. The requirement for composite samples is replaced with a footnote stating that samples shall be taken in each field.
1.A.4.a. Hydraulic Conductivity footnote clarified for sampling to be initiated at the most restrictive subsoil layer.
1.B.4. This condition was clarified to prevent the application of effluent to bare ground.
1.B.5. A special condition to maintain a complete and healthy crop was deleted and the word "maintain" was added to a similar special condition above it to establish a complete and healthy crop.
1.B.6. (formerly), now I.B.5. O&M manual condition. The QL issue was addressed by an addition to special condition No. 6, "The O&M manual shall include a quality assurance plan which specifically addresses sampling and laboratory analyses. This plan must include a sampling protocol, holding times, laboratory methods and quantification limits." It was also clarified that the most current approved version of the O&M and NMP shall supercede all previously approved editions.
1.B.7. (formerly), now I.B.6. NMP condition. This condition was clarified per owner concerns to specify that the NMP may be re-evaluated earlier than the three year expiration, and that the approval is to be performed as an O&M manual approval. Further clarification in the fact sheet is made that any increase in the amount of land application area, cited either within or outside of the NMP, must go through the public participation process, i.e., a major modification that includes a permit fee.
1.B.13. (formerly), now I.B.12. Reserve area in service within 30 days. Language was deleted about the 30 days beginning with the notification to DEQ under Part II.F.1. Instead, I.B.21.h., (formerly), now I.B.20.h. (monthly summary report) now contains a requirement for a list to specify when groundcover was initiated, and dates of effluent application. The original requirement for a spray head utilization summary (see below) was deleted.
B.1.21.f., (formerly), now I.B.20.f. Freeboard measurements may be documented on Attachment D.10.
B.1.21.h., (formerly), now I.B.20.h. Requirement for a summary of spray head utilization. This is not appropriate for the particular irrigation system at Coles Point as it would be for a traveling gun type system, so the requirement was deleted. The documentation of land application rates is required elsewhere in the permit.
B1.29., (formerly), now deleted. End gun spray equipment operation condition and fact sheet justification (Page 4 of 6). This is also not appropriate for the particular irrigation system at Coles Point as it would be for a traveling gun type system, so the requirement was deleted. The documentation of land application rates is required elsewhere in the permit.
Attachment D.3. Storage Tank Freeboard. Resource pointed out this should be shown as 2 ft. minimum rather than 2 ft. maximum. This was corrected.
Fact sheet page 5 of 6 – The public notice language includes in the last paragraph a statement referring to the permit action as reissuance; Resource said it should be issuance instead. This is correct as well.
The metals forms on the attachments have been specified as total recoverable.
Attachment D.6. The sample type for hydraulic conductivity has been corrected to match Part 1.A.
Attachment D.10. The Freeboard form developed by Steve Stell will be added to the reporting forms as Attachment D.10. See B.1.21.f., (formerly), now I.B.20.f. above.

MEMORANDUM

DEPARTMENT OF ENVIRONMENTAL QUALITY

PIEDMONT REGION-KILMARNOCK OFFICE

429 Church Street P. O. Box 669 Kilmarnock, VA 22482

SUBJECT: Coles Point Site Visit 9/25/02

TO: File

FROM: Denise Mosca

DATE: 9/25/02

COPIES: file

I met Westmoreland County's consultants (Resource International) and Reed Barrows from the VDH at the site for the purpose of verifying application information and observing the groundwater monitoring well placement as they had just been installed. The weather has been dry, but a stream to the north west of the property was flowing. A drainage swale that bisects the property was dry. The site has been timbered and bare. The well locations seem generally well placed, with one upgradient well across the street from the spray site in the woods, and 5 downgradient wells on the 50 acre field. The six wells appear to be well-placed according to the determined direction of flow. However, they are located in the sprayfield and not the buffer area. The engineers have not put the wells where they would be subject to the spray, they gave them a "buffer zone" to themselves. Reed Barrows of the VDH said he thought the locations were adequate.