VIRGINIA POLLUTION ABATEMENT PERMIT APPLICATION
FORM A
ALL APPLICANTS

1. Facility Name: Sonoco Products Company

County and Location: City of Richmond

Address: 1850 Commerce Road

Richmond, VA 23218-1155

2. Legal Name of Owner: Sonoco Products Company

Address: 1850 Commerce Road Richmond, VA 23218-1155

Telephone Number: 804-233-5411

3. Owner Contact: Greg Goode

Title: Plant Manager

Address: (if different) _____

Telephone Number: 804-233-5411

4. Existing permits (e.g., VPA, VPDES; VWP, RCRA; UIC; other:

Agency	Permit Type	Number
Virginia DEQ	VPA Industrial Wastewater	VPA00513
City of Richmond	Industrial Discharge Permit	16-30950
Virginia DEQ	Air Permit	50356
EPA	RCRA Generators Permit	VAD074740579
Virginia DEQ	Regulated Waste Activity	VAR00011791

5. Nature of Business: Manufacturer of recycled paperboard

SIC Code(s): 2631 ; _____ ; _____

6. Type of Waste:
(check blank as appropriate)

	Proposed	Existing
Animal Waste (complete Form B)		
Industrial Waste (complete Form C)		X
Land Application of Municipal Effuent (complete Form D, Part I)		

Land Appliction of Biosolids/
Sewage Sludge
(complete Form D, Part II) _____ _____

7. General Location Map:

Provide a general location map which clearly identifies the location of the facility

---

I certify under penalty of law that this document and all attachments were prepared under my direction or supervision in accordance with a system designed to assure that qualified personnel properly gather and evaluate the information submitted. Based on my inquiry of the person or persons who manage the system or those persons directly responsible for gathering information, the information submitted is to the best of my knowledge and belief true, accurate and complete. I am aware that there are significant penalties for submitting false information including the possibility of fine and imprisonment for knowing violations. I further certify that I am an authorized signatory as specified in the VPA Permit Regulation (9VAC25-32).

Signature: _____ Date: 5/8/09

Printed Name: Greg Goode

Title: Mill Manager

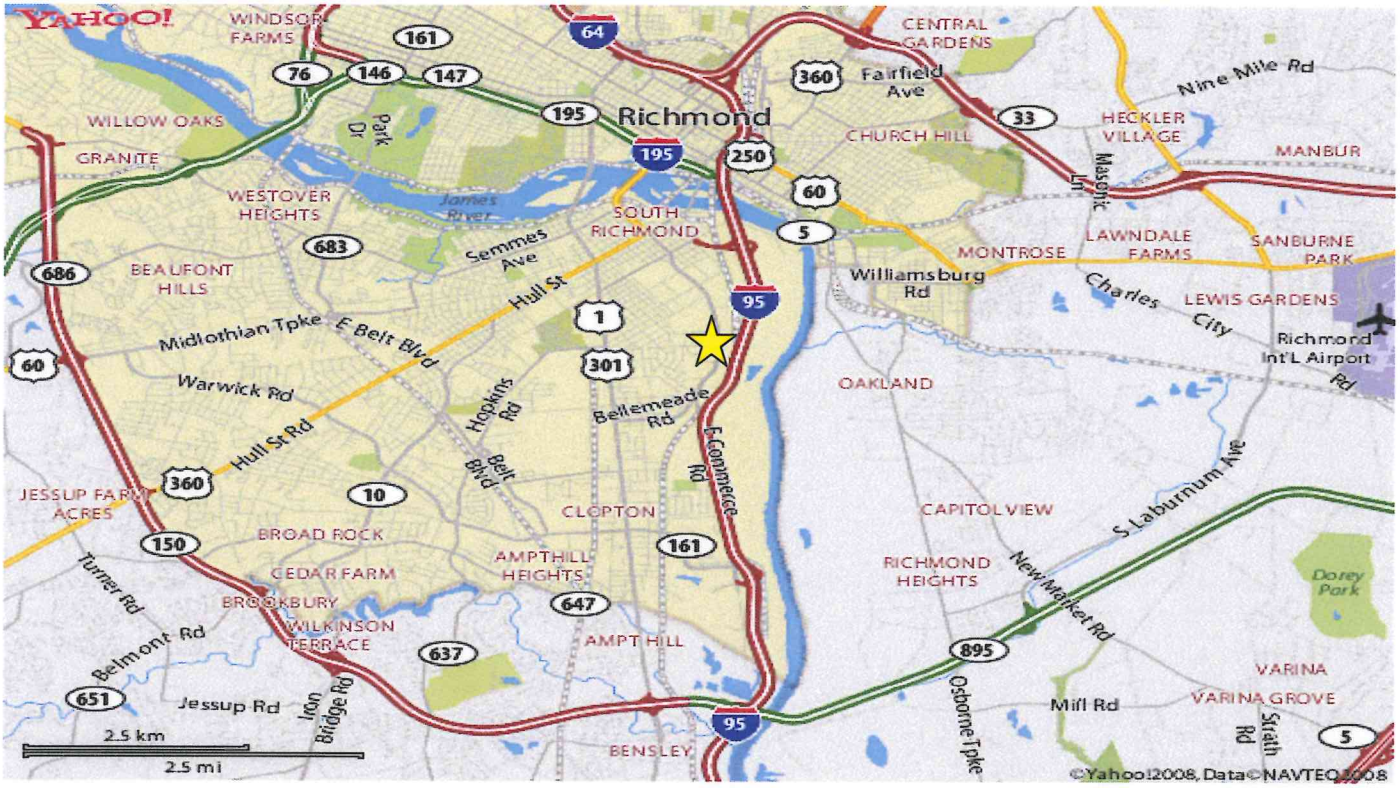
YAHOO!
WINDSOR FARMS
CENTRAL GARDENS
Fairfield Ave
Nine Mile Rd
Richmond
WILLOW OAKS
GRANITE
Park Dr
CHURCH HILL
HECKLER VILLAGE
MANBUR
Masonic Ln
WESTOVER HEIGHTS
James River
SOUTH RICHMOND
Semmes Ave
MONTROSE
LAWNDALE FARMS
SANBURNE PARK
BEAUFONT HILLS
Hull St
Williamsburg Rd
Charles City Rd
LEWIS GARDENS
Richmond Int'L Airport
Midlothian Tpke
E Belt Blvd
Warwick Rd
OAKLAND
Hull St Rd
Hopkins Rd
Bellemeade Rd
E Commerce Rd
JESSUP FARM ACRES
Belt Blvd
CLOPTON
CAPITOL VIEW
S Laburnum Ave
BROAD ROCK
AMPTHILL HEIGHTS
RICHMOND HEIGHTS
New Market Rd
Dorey Park
Turner Rd
CEDAR FARM
BROOKBURY
WILKINSON TERRACE
AMPT HILL
Belmont Rd
Jessup Rd
Iron Bridge Rd
Osborne Tpke
Mill Rd
VARINA
VARINA GROVE
Strath Rd
BENSLEY
2.5 km
2.5 mi
©Yahoo!2008, Data©NAVTEQ2008
N

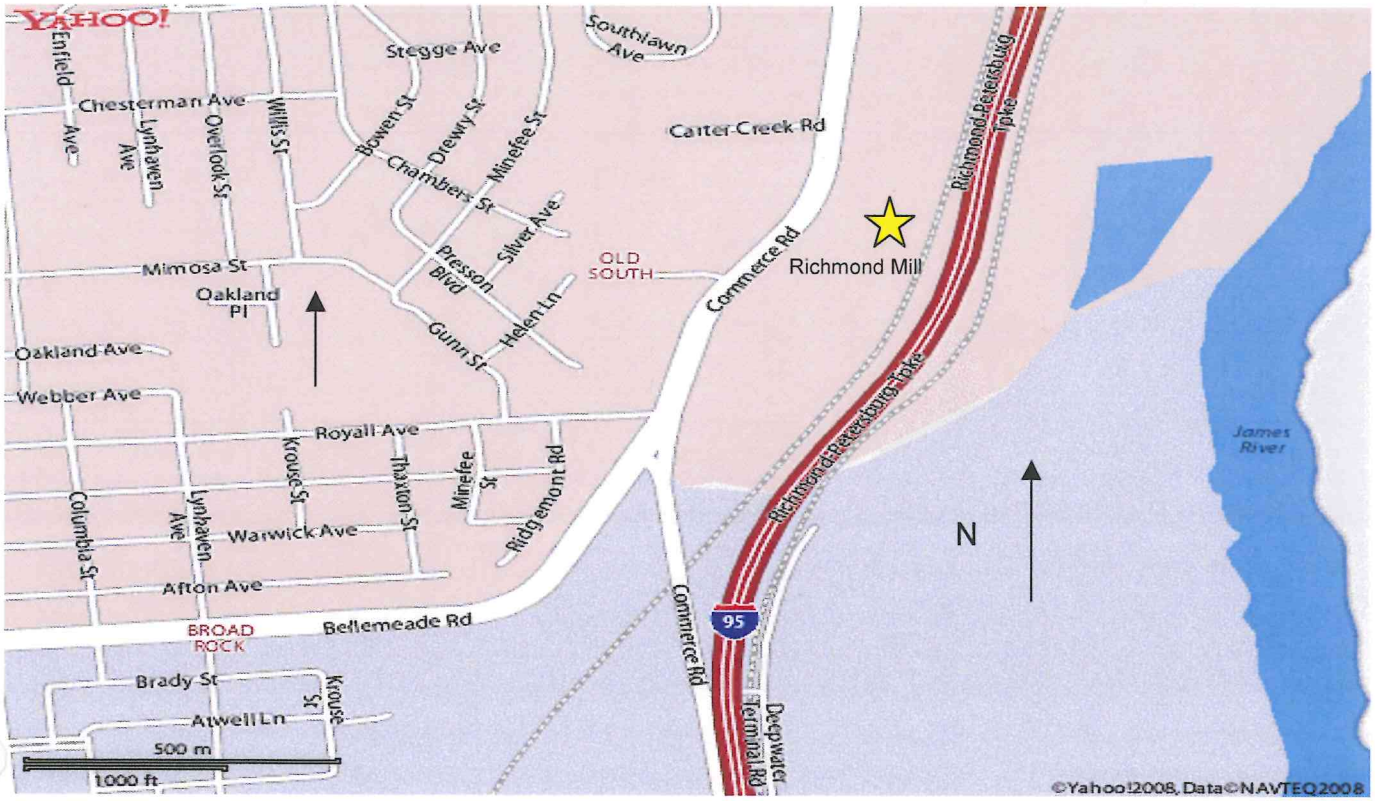
YAHOO!
Enfield Ave
Stegge Ave
Southlawn Ave
Chesterman Ave
Lynhaven Ave
Overlook St
Willis St
Bowen St
Drewry St
Minefee St
Carter Creek Rd
Chambers St
Silver Ave
Richmond-Petersburg Tpke
Mimosa St
Oakland Pl
Presson Blvd
OLD SOUTH
Commerce Rd
Richmond Mill
Helen Ln
Gunn St
Oakland Ave
Webber Ave
Royall Ave
Krouse St
Thaxton St
Minefee St
Ridgemont Rd
James River
Columbia St
Lynhaven Ave
Warwick Ave
Afton Ave
N
Bellemeade Rd
BROAD ROCK
Brady St
Atwell Ln
Krouse St
500 m
1000 ft
Deepwater Terminal Rd
©Yahoo!2008, Data©NAVTEQ2008

PUBLIC NOTICE BILLING AUTHORIZATION FORM

I hereby authorize the Department of Environmental Quality to have the cost of publishing a public notice billed to the Agent/Department shown below. The public notice will be published once a week for two consecutive weeks in accordance with 9 VAC 25-32-140. A.

Agent/Department to be billed: Sonoco Products Richmond Mill

Owner: Sonoco Products Company

Applicant's Address: 1850 Commerce Road

Richmond, VA 23224

Agent's Telephone No: 804-233-5411

Authorizing Agent: _____
Signature

Facility Name:
Permit No. VPA**00513**

Please return to:

Mark Mongold
Department of Environmental Quality
Piedmont Regional Office
4949-A Cox Road
Glen Allen, VA 23060
Fax Number: (804)-527-5106

VIRGINIA POLLUTION ABATEMENT PERMIT APPLICATION

FORM C

INDUSTRIAL WASTE

PART C-I General Information

1. Facility Name: _____Sonoco Products Company_____

2. Source(s) of Waste

a. Provide a narrative which explains your facility operations and how wastes are produced.

Sonoco Products manufactures multi-ply paperboard in various thickness using wastepaper as a raw material. The wastepaper is repulped by way of soaking and mechanical agitation and is reformed through mechanical pressing and steam assisted drying. Wastes are produced through mechanical screening and dewatering of contaminants present in the raw materials and through the blowdown operation of the package boiler used for steam generation.

b. Attach a line drawing of the facility in block diagram for showing the manufacturing or processing operations and all points where wastes are produced. (Attachment 1)

c. Explain how sewage from employees is handled (i.e., septic tank/drainfield,sanitary sewer etc.):

All sewage from employees is disposed of by way of a sanitary sewer to the City of Richmond's Waste Water Treatment Plant.

d. Operational Parameters

Maximum hours/day of operation: ____24 hours_____
Average hours/day of operation: _____24 hours_____
Days/week of operation: _____7 days_____
Specific months of operation: _____12 months (year-round)___

3. Non-Hazardous Declaration

a. Statement for Plant Operations
Is any part of the manufacturing operations, plant processes or waste treatment facilities at these plant facilities under the purview of the "Virginia Hazardous Waste Management Regulations" or the "Virginia Solid Waste Management Regulations?" _____ Yes __X__No.

If Yes, please provide a brief explanation of the type of permit or requirements that apply.

_____
_____
_____
_____
_____
_____
_____
_____

b. For waste to be land applied, a responsible person, as defined by VR680-14-01, must sign the following statement.

I certify that the waste described in this application is non-hazardous and not regulated under the Resource Conservation and Recovery Act.

_____**Date**_____
(Signature of Owner)

4. Waste Characterization

a. Wastewater - Provide at least one analysis for each parameter. Upon review, additional analyses may be required by DEQ.

Parameter Concentration		
Flow to treatment	0.600	MGD
Flow to storage	0	MGD
Vol. to treatment	0	MG
Vol. to storage	0	MG
Vol. Land applied	0	MG/year
BOD_5	712	mg/l
COD	1338	mg/l
TOC	113	mg/l
TSS	238	mg/l
Percent Solids	0.024	%
pH	7.4	S.U.
Alkalinity as $CaCO_3$	<1	mg/l
Nitrogen, (Nitrate)	0.73	mg/l
Nitrogen, (Ammonium)	<1	mg/l
Nitrogen, (Total Kjeldahl)	13	mg/l
Phosphorus, (Total)	1.73	mg/l
Potassium, (Total)	15 mg/L	mg/l
Sodium	217 mg/L	mg/l
		mg/l

b. Sludge - Provide at least one analysis for each parameter. Upon review, additional analyses may be required by DEQ.

Parameter Concentration*		
Percent Solids	43	%
Volatile Solids	31.6	%
pH	7.58	S.U.
Alkalinity as $CaCO_3$**	3390	mg/kg
Nitrogen (Nitrate)	12.2	mg/kg
Nitrogen (Ammonium)	36.9	mg/kg
Nitrogen (Total Kjeldahl)	570	mg/kg
Phosphorous (Total)	602	mg/kg
Potassium (Total)	522	mg/kg
Lead	34.9	mg/kg
Cadmium	0.796	mg/kg
Copper	103	mg/kg
Nickel	16.4	mg/kg
Zinc	370	mg/kg
		mg/kg

- Unless otherwise noted, report results on dry weight basis.

** Lime treated sludges (l0% or more lime by dry weight) should be analyzed for percent $CaCO_3$.

c. Provide a separate waste characterization listing for each wastewater and sludge generated at the facility. Insert "Yes" beside all parameters believed present and provide at least one analysis for each. Insert "No" beside all parameters believed not present. Indicate "NA" for any parameter already addressed in Item 4a. or 4b.

water

Parameter	Believed Present (yes or no)	Concentration*
Sodium	Yes	217 mg/L
Bromide	No	
Total Residual	No	
Chlorine	No	
Fecal Coliform	No	>16,000 MPN
Fluoride	No	
Oil & Grease	Yes	<5 mg/L
Total Radioactivity	No	
Total Alpha	No	
Total Beta	No	
Total Radium	No	
Total Radium 226	No	
Sulfate (as SO_4)	Yes	<5 mg/L
Sulfide (as S)	Yes	12.6 mg/L
Sulfite (as SO_3)	Yes	4 mg/L
Surfactants	Yes	0.55 mg/L
Total Aluminum	Yes	2.02 mg/L
Total Barium	No	0.401 mg/L
Total Boron	No	5.94 mg/L
Total Cobalt	No	ND (0.005 mg/L)
Total Iron	Yes	0.763 mg/L
Total Magnesium	Yes	9.0 mg/L
Total Molybdenum	No	ND (0.005 mg/L)
Total Manganese	Yes	0.447 mg/L
Total Tin	No	ND
Total Titanium	No	0.130 mg/L
Total Antimony	No	ND (0.005 mg/L)
Total Arsenic	No	ND (0.005 mg/L)
Total Beryllium	No	ND (0.0005 mg/L)
Total Cadmium	No	<0.0005 mg/L
Total Chromium	No	0.006 mg/L
Total Copper	Yes	0.030 mg/L
Total Lead	No	0.008 mg/L
Total Mercury	No	<0.0002 mg/L
Total Nickel	Yes	0.007 mg/L
Total Selenium	No	ND (0.005 mg/L)
Total Silver	No	<0.001 mg/L
Total Thallium	No	ND (0.005 mg/L)
Total Zinc	Yes	0.098 mg/L
Total Cyanide	No	<0.005 mg/L
Total Phenols	No	0.02 mg/L
Dioxin	No	
Acrolein	No	ND (50ug/L)

*If the analysis is for sludge, report results on dry weight basis.

C. (Continued)

Parameter	Believed Present (yes or no)	Concentration
Acrylonitrile	No	ND (50 ug/L)
Benzene	No	ND (5 ug/L)
Bis(Chloromethyl)Ether	No	
Bromoform	No	ND (5 ug/L)
Carbon Tetrachloride	No	ND (5 ug/L)
Chlorobenzene	No	ND (5 ug/L)
Chlorodibromomethane	No	ND (5 ug/L)
Chloroethane	No	ND (5 ug/L)
2-Chloroethylvinyl Ether	No	ND (10 ug/L)
Chloroform	No	ND (5 ug/L)
Dichlorobromomethane	No	ND (5 ug/L)
Dichlorodifluoromethane	No	ND (5 ug/L)
1,1-Dichloroethane	No	ND (5ug/L)
1,2-Dichloroethane	No	ND (5ug/L)
1,1-Dichloroethylene	No	ND (5ug/L)
1,2-Dichloropropane	No	ND (5 ug/L)
1,3-Dichloropropylene	No	ND (5 ug/L)
Ethylbenzene	No	ND (5 ug/L)
Methyl Bromide	No	ND (10 u/L)
Methyl Chloride	No	ND (10 ug/L)
Methylene Chloride	No	ND (5 ug/L)
1,1,2,2-Tetrachlorethane	No	ND (5 ug/L)
Tetrachloroethylene	No	ND (5 ug/L)
Toluene	No	ND (5 ug/L)
1,2-TransDichloroethylene1	No	ND (5 ug/L)
1,1,-Trichloroethane	No	ND (5 ug/L)
1,1,2,-Trichloroethane	No	ND (5 ug/L)
Trichloroethylene	No	ND (5 ug/L)
Trichlorofluoromethane	No	ND (5ug/L)
Vinyl Chloride	No	ND (5 ug/L)
2-Chlorophenol	No	ND (5 ug/L)
2,4-Dichlorophenol	No	ND (5 ug/L)
2,4-Dimethylphenol	No	ND (5 ug/L)
4,6-Dinitro-O-Cresol	No	ND (5 ug/L)
2,4-Dinitrophenol	No	ND (20 ug/L)
2-Nitrophenol	No	ND (5 ug/L)
4-Nitrophenol	No	ND (5 ug/L)
P-Chlor-M-Cresol	No	ND (5 ug/L)
Pentachlorophenol	No	ND (10 ug/L)
Phenol	No	ND (5 ug/L)
2,4,6-Trichlorophenol	No	ND (5 ug/L)
Acenaphthene	No	ND (5 ug/L)
Acenaphtylene	No	ND (5 ug/L)
Acenaphtylene	No	
Benzidine	No	ND (5 ug/L)
Benzo(a)Athracene	No	ND (5 ug/L)
Benzo(a)Pyrene	No	ND (5 ug/L)
3,4-Benzofluoranthene	No	
Benzo(ghi) Perylene	No	ND (5 ug/L)
Benzo(k)Fluoranthene	No	ND (5 ug/L)
Bis(2-Chloroethoxy)Methane	No	ND (5 ug/L)
Bis(2-Chloroethyl) Ether	No	ND (5 ug/L)
Bis(2-Chloroisopropyl)Ether	No	ND (5 ug/L)
Bis(2-Ethylhexyl)Phthalate	No	ND (5 ug/L)
4-Bromophenyl Phenyl Ether	No	ND (5 ug/L)
Butyl Benzyl Phthalate	No	ND (5 ug/L)
4-Chlorophenyl Phenyl Ether	No	ND (5 ug/L)
2-Chloronaphthalene	No	ND (5 ug/L)
Chrysene	No	ND (5 ug/L)
Dibenzo(a,h) Anthracene	No	ND (5 ug/L)

c. (Continued)

Parameter	Believed Present (yes or no)	Concentration
1,2-Dichlorobenzene	No	ND (5 ug/L)
1,3-Dichlorobenzene	No	ND (5 ug/L)
1,4-Dichlorobenzene	No	ND (5 ug/L)
3,3'-Dichlorobenzidine	No	ND (5 ug/L)
Diethyl Phthalate	No	ND (5 ug/L)
Dimethyl Phthalate	No	ND (5 ug/L)
Di-N-Butyl Phthalate	No	ND (5 ug/L)
2,4-Dinitrotoluene	No	ND (5 ug/L)
2,6-Dinitrotoluene	No	ND (5 ug/L)
Di-N-Octyl Phthalate	No	ND (5 ug/L)
1,2-Diphenylhydrazine(as	No	ND (5 ug/L)
Azobenzene)		
Fluoranthene	No	ND (5 ug/L)
Fluorene	No	ND (5 ug/L)
Hexachlorobenzene	No	ND (5 ug/L)
Hexachlorobutadiene	No	ND (5 ug/L)
Hexachlorocyclopentadiene	No	ND (5 ug/L)
Hexachloroethane	No	ND (5 ug/L)
Indeno(1,2,3-cd)Pyrene	No	ND (5 ug/L)
Isophorone	No	ND (5 ug/L)
Naphthalene	No	ND (5 ug/L)
Nitrobenzene	No	ND (5 ug/L)
N-Nitrosodimethylamine	No	ND (5 ug/L)
N-Nitrosodi-N-Propylamine	No	ND (5 ug/L)
N-Nitrosodiphenylamine	No	ND (5 ug/L)
Phenanthane	No	ND (5 ug/L)
Pyrene	No	ND (5 ug/L)
1,2,4 - Trichlorobenzene	No	ND (5 ug/L)
Aldrin	No	ND (5 ug/L)
á- BHC	No	ND (5 ug/L)
â- BHC	No	ND (5 ug/L)
ã- BHC	No	ND (5 ug/L)
ä- BHC	No	ND (5 ug/L)
Chlordane	No	ND (5 ug/L)
4,4'- DDT	No	ND (5 ug/L)
4,4'- DDE	No	ND (5 ug/L)
4,4'- DDD	No	ND (5 ug/L)
Dieldrin	No	ND (5 ug/L)
á-Endosulfan	No	ND (5 ug/L)
â-Endosulfan	No	ND (5 ug/L)
Endosulfan Sulfate	No	ND (5 ug/L)
Endrin	No	ND (5 ug/L)
Endrin Aldehyde	No	ND (5 ug/L)
Heptachlor	No	ND (5 ug/L)
Heptachlor Epoxide	No	ND (5 ug/L)
PCB - 1242	No	ND (5 ug/L)
PCB - 1254	No	ND (5 ug/L)
PCB - 1221	No	ND (5 ug/L)
PCB - 1232	No	ND (5 ug/L)
PCB - 1248	No	ND (5 ug/L)
PCB - 1260	No	ND (5 ug/L)
PCB - 1016	No	ND (5 ug/L)
Toxaphene	No	ND (20 ug/L)
Chloromethane	No	NA
Chlorpyrifos	No	NA
Demeton	No	NA
Dichloromethane	No	NA
(2,4-dichlorophenoxy) acetic	No	NA
acid (2,4-D)	No	NA
Di-2-Ethylhexyl Phthalate	No	NA
MBAS	No	NA

c. (Continued)

Parameter	Believed Present (yes or no)	Concentration
Lindane	No	NA
Hydrogen Sulfide	No	
Silvex	No	NA
Tributyltin	No	NA
Kepone	No	NA
Malathion	No	NA
Methoxyclor	No	ND (5 ug/L)
Mirex	No	NA
Monochlorobenzene	No	NA
Parathion	No	NA

d. Provide a separate waste characterization listing for each wastewater and sludge generated at the facility. List any additional parameters believed present in the spaces provided below and provide at least one analysis for each.

Parameter	Concentration

c. Provide a separate waste characterization listing for each wastewater and sludge generated at the facility. Insert "Yes" beside all parameters believed present and provide at least one analysis for each. Insert "No" beside all parameters believed not present. Indicate "NA" for any parameter already addressed in Item 4a. or 4b.

Sludge

Parameter	Believed Present (yes or no)	Concentration*
Sodium	Yes	1440 mg/Kg
Bromide	Yes	<10 mg/kg
Total Residual	No	
Chlorine	Yes	203 mg/Kg
Fecal Coliform	Yes	<20/10g MPN/g
Fluoride	Yes	ND (20mg/kg)
Oil & Grease	Yes	14100 mg/kg
Total Radioactivity	NO	
Total Alpha	NO	
Total Beta	NO	
Total Radium	NO	
Total Radium 226	NO	
Sulfate (as SO_4)	Yes	ND (450 mg/Kg)
Sulfide (as S)	Yes	ND (45.1 mg/Kg)
Sulfite (as SO_3)	NO	
Surfactants	NO	
Total Aluminum	Yes	11200 mg/kg
Total Barium	Yes	256 mg/kg
Total Boron	Yes	59.4 mg/kg
Total Cobalt	Yes	5.31 mg/kg
Total Iron	Yes	4880 mg/kg
Total Magnesium	Yes	6040 mg/kg
Total Molybdenum	Yes	14.5 mg/kg
Total Manganese	Yes	159 mg/kg
Total Tin	Yes	12.1 mg/kg
Total Titanium	Yes	132 mg/mg
Total Antimony	Yes	<2.42 mg/L
Total Arsenic	Yes	<2.42 mg/L
Total Beryllium	Yes	<0.242 mg/L
Total Cadmium	Yes	1.11 mg/L
Total Chromium	Yes	44.0 mg/L
Total Copper	Yes	232 mg/L
Total Lead	Yes	42.5 mg/L
Total Mercury	Yes	0.228 mg/Kg
Total Nickel	Yes	21.2 mg/kg
Total Selenium	Yes	<2.42 mg/kg
Total Silver	Yes	2.01 mg/kg
Total Thallium	Yes	<2.42 mg/kg
Total Zinc	Yes	369 mg/kg
Total Cyanide	Yes	8.91 mg/Kg
Total Phenols	Yes	1.74 mg/Kg
Dioxin	No	
Acrolein	No	

*If the analysis is for sludge, report results on dry weight basis.

C. (Continued)

Parameter	Believed Present (yes or no)	Concentration
Acrylonitrile	No	
Benzene	Yes	<0.40 mg/kg
Bis(Chloromethyl)Ether	No	
Bromoform	Yes	<0.40 mg/kg
Carbon Tetrachloride	yes	<0.40 mg/kg
Chlorobenzene	yes	<0.40 mg/kg
Chlorodibromomethane	No	
Chloroethane	Yes	<0.40 mg/kg
2-Chloroethylvinyl Ether	Yes	<0.80 mg/kg
Chloroform	Yes	<0.40 mg/kg
Dichlorobromomethane	No	
Dichlorodifluoromethane	Yes	<0.40 mg/kg
1,1-Dichloroethane	Yes	<0.40 mg/kg
1,2-Dichloroethane	Yes	<0.40 mg/kg CC
1,1-Dichloroethylene	No	
1,2-Dichloropropane	Yes	<0.40 mg/kg
1,3-Dichloropropylene	No	
Ethylbenzene	Yes	<0.40 mg/kg
Methyl Bromide	No	
Methyl Chloride	No	
Methylene Chloride	Yes	<0.40 mg/kg
1,1,2,2-Tetrachlorethane	Yes	<0.40 mg/kg
Tetrachloroethylene	No	
Toluene	Yes	<0.40 mg/kg
1,2-TransDichloroethylene1	Yes	<0.40 mg/kg
1,1,-Trichloroethane	No	
1,1,2,-Trichloroethane	Yes	<0.40 mg/kg
Trichloroethylene	Yes	<0.40 mg/kg
Trichlorofluoromethane	Yes	<0.40 mg/kg
Vinyl Chloride	Yes	<0.40 mg/kg
2-Chlorophenol	Yes	<4.1 mg/kg
2,4-Dichlorophenol	Yes	<4.1 mg/kg
2,4-Dimethylphenol	Yes	<4.1 mg/kg
4,6-Dinitro-O-Cresol	No	
2,4-Dinitrophenol	Yes	<4.1 mg/kg
2-Nitrophenol	Yes	<4.1 mg/kg
4-Nitrophenol	Yes	<4.1 mg/kg
P-Chlor-M-Cresol	Yes	<4.1 mg/kg
Pentachlorophenol	Yes	<8.3 mg/kg
Phenol	Yes	<4.1 mg/kg
2,4,6-Trichlorophenol	Yes	<4.1 mg/kg
Acenaphthene	Yes	<4.1 mg/kg
Acenaphtylene	Yes	<4.1 mg/kg
Acenaphtylene	Yes	<4.1 mg/kg
Benzidine	Yes	<4.1 mg/kg
Benzo(a)Athracene	Yes	<4.1 mg/kg
Benzo(a)Pyrene	Yes	<4.1 mg/kg
3,4-Benzofluoranthene	No	
Benzo(ghi) Perylene	Yes	<4.1 mg/kg
Benzo(k)Fluoranthene	Yes	<4.1 mg/kg
Bis(2-Chloroethoxy)Methane	Yes	<4.1 mg/kg
Bis(2-Chloroethyl) Ether	Yes	<4.1 mg/kg
Bis(2-Chloroisopropyl)Ether	Yes	<4.1 mg/kg
Bis(2-Ethylhexyl)Phthalate	Yes	39 mg/kg
4-Bromophenyl Phenyl Ether	Yes	<4.1 mg/kg
Butyl Benzyl Phthalate	Yes	<4.1 mg/kg
4-Chlorophenyl Phenyl Ether	Yes	<4.1 mg/kg
2-Chloronaphthalene	Yes	<4.1 mg/kg
Chrysene	Yes	<4.1 mg/kg
Dibenzo(a,h) Anthracene	Yes	<4.1 mg/kg

c. (Continued)

Parameter	Believed Present (yes or no)	Concentration
1,2-Dichlorobenzene	Yes	<0.40 mg/kg
1,3-Dichlorobenzene	Yes	<0.40 mg/kg
1,4-Dichlorobenzene	Yes	<0.40 mg/kg
3,3'-Dichlorobenzidine	Yes	<4.1 mg/kg
Diethyl Phthalate	Yes	<4.1 mg/kg
Dimethyl Phthalate	Yes	<4.1 mg/kg
Di-N-Butyl Phthalate	Yes	<4.1 mg/kg
2,4-Dinitrotoluene	Yes	<4.1 mg/kg
2,6-Dinitrotoluene	Yes	<4.1 mg/kg
Di-N-Octyl Phthalate	Yes	<4.1 mg/kg
1,2-Diphenylhydrazine(as Azobenzene)	Yes	<4.1 mg/kg
Fluoranthene	Yes	<4.1 mg/kg
Fluorene	Yes	<4.1 mg/kg
Hexachlorobenzene	Yes	<4.1 mg/kg
Hexachlorobutadiene	Yes	<4.1 mg/kg
Hexachlorocyclopentadiene	Yes	<4.1 mg/kg
Hexachloroethane	Yes	<4.1 mg/kg
Indeno(1,2,3-cd)Pyrene	Yes	<4.1 mg/kg
Isophorone	Yes	<4.1 mg/kg
Naphthalene	Yes	<4.1 mg/kg
Nitrobenzene	Yes	<4.1 mg/kg
N-Nitrosodimethylamine	Yes	<4.1 mg/kg
N-Nitrosodi-N-Propylamine	Yes	<4.1 mg/kg
N-Nitrosodiphenylamine	No	
Phenanthane	No	
Pyrene	Yes	<4.1 mg/kg
1,2,4 - Trichlorobenzene	Yes	<4.1 mg/kg
Aldrin	No	NA
á- BHC	No	NA
â- BHC	No	NA
ã- BHC	No	NA
ä- BHC	No	NA
Chlordane	No	NA
4,4'- DDT	No	NA
4,4'- DDE	No	NA
4,4'- DDD	No	NA
Dieldrin	No	NA
á-Endosulfan	No	NA
â-Endosulfan	No	NA
Endosulfan Sulfate	No	NA
Endrin	No	NA
Endrin Aldehyde	No	NA
Heptachlor	No	NA
Heptachlor Epoxide	No	NA
PCB - 1242	No	NA
PCB - 1254	No	NA
PCB - 1221	No	NA
PCB - 1232	No	NA
PCB - 1248	No	NA
PCB - 1260	No	NA
PCB - 1016	No	NA
Toxaphene	No	NA
Chloromethane	No	NA
Chlorpyrifos	No	NA
Demeton	No	NA
Dichloromethane	No	NA
(2,4-dichlorophenoxy) acetic	No	NA
acid (2,4-D)	No	NA
Di-2-Ethylhexyl Phthalate	No	NA
MBAS	No	NA

c. (Continued)

Parameter	Believed Present (yes or no)	Concentration
Lindane	No	NA
Hydrogen Sulfide	No	NA
Silvex	No	NA
Tributyltin	No	NA
Kepone	No	NA
Malathion	No	NA
Methoxyclor	No	NA
Mirex	No	NA
Monochlorobenzene	No	NA
Parathion	No	NA

d. Provide a separate waste characterization listing for each wastewater and sludge generated at the facility. List any additional parameters believed present in the spaces provided below and provide at least one analysis for each.

Parameter	Concentration

5. Briefly describe the design and provide a line drawing of the waste treatment facility which relates the various components of the treatment system including source(s), treatment unit(s), disposal alternatives, and flow estimates from the various process units.

See Attachment 2

6. Indicate the number and type of waste storage facilities. If existing, indicate the volume; DEQ may require additional information upon review.

No.		Existing (Volume)	Proposed
___	Earthen Storage Pond	_____	_____
___	Storage Pit	_____	_____
___	Storage Tank	_____	_____
___	Anaerobic Lagoon	_____	_____
___	Other Aerobic Lagoon	34 MG	10 MG
	_____	_____	_____

7. Have the existing storage/treatment facilities identified in Item 5 and 6 above been previously approved by the Department of Environmental Quality?
Yes__X_ No_____

If yes, provide the date of the approval and proceed to Item 8.
Approval Date:___11/5/1999____

If no, provide information required by Items 9, 10, and ll.

8. Have the previously approved facilities been altered or expanded?
Yes_____ No__X__

If yes, it will be necessary to provide the information for such facilities, as required by Items 9 & 10, and 11.

If no, proceed to Item 12.

9. Provide conceptual design for the treatment facilities including design approach used. Explain how ground water will be protected. Demonstration should include soil evaluation, geology, hydrology, and topography. The following information must be provided for each proposed facility identified in Item 6 above and for those existing facilities in Items 7 and 8 which have not been either previously approved or were altered:

a. Design calculations for volume (ft^3) and estimated days of storage

b. Description of lining material and permeability

c. Plan and cross-sectional views

d. Depth to seasonal high water table and separation to permanent water table.

10. Will the proposed waste storage/treatment facilities be located within the 100-year flood plain? ____Yes _____No.

    If yes, what is the elevation of the l00-year flood plain and elevation of the proposed facilities. Also, how will the waste storage facilities be protected from flooding? (Flood elevation can be obtained from your local county zoning/planning department).

    _____
    _____
    _____
    _____
    _____
    _____
    _____

11. Will the proposed or existing storage/treatment facilities receive any storm water runoff? ____Yes _____No.

    If yes, provide total area (square feet, acres, etc.) from which runoff will occur and indicate this area on the line drawing (Item 5).

    Total area: _____
    Dimensions: _____

12. Will any part of the waste generated at your facility be land applied? Yes _____ No __X__. If yes, Part C-II must be completed.

VIRGINIA POLLUTION ABATEMENT PERMIT APPLICATION
FORM C
INDUSTRIAL WASTE

PART C-II Land Application and Waste Handling Procedure

Facility Name: _____

Items 1-12 pertain to the land application of industrial sludge/wastewater at frequent and infrequent rates. The applicant may request a waiver in writing for any of the required information if it is not pertinent to their operation.

1. For each land application site provide a topographic map of sufficient scale (5 foot contour preferred) clearly showing the location of the following features within 0.25 mile of the site. Provide a legend with approximate scale. (See General Instructions for map requirements.)

   a. Proposed or existing ground water monitoring wells
   b. General direction of ground water movement
   c. Water wells, abandoned or operating
   d. Surface water
   e. Springs
   f. Public water supply(s)
   g. Sink holes
   h. Underground and/or surface mines
   i. Mine pool (or others) surface water discharge points
   j. Mining spoil piles and mine dumps
   k. Quarry(s)
   l. Sand and gravel pits
   m. Gas and oil wells
   n. Diversion ditch(s)
   o. Agricultural drainage ditch(s)
   p. Occupied dwellings, including industrial and commercial establishments
   q. Landfills or dumps
   r. Other unlined impoundments
   s. Septic tanks and drainfields
   t. Injection wells
   u. Rock outcrops
   v. Soil boring or test pits locations
   w. Subsurface drainage tile

2. For each land application site provide a site plan of sufficient detail to clearly show any landscape features which will require buffer zones or may limit land application. Provide a legend and clearly mark the field boundaries and property lines. The following landscape features should be delineated. (See General Instructions for map requirements.)

   a. Drainageways
   b. Rock outcrops
   c. Sink holes
   d. Drinking water wells and springs
   e. Monitoring wells
   f. Property lines
   g. Roadways
   h. Occupied dwellings
   i. Slopes (greater than 8% by slope class)
   j. Wet spots
   k. Severe erosion (SCS designation)
   l. Frequently flooded soils (SCS designation)
   m. Surface waters

3. Provide a complete description of agronomic practices for each crop to be grown, on field-by-field basis including a nutrient management program, soil and/or plant tissue testing, and the coordination of tillage practices, planting and harvesting schedules and timing of land application.

4. Describe all land application methods and any equipment used in the process.

5. Provide a detailed soil survey map, preferably photographically based, with the field boundaries clearly marked. (A USDA-SCS soil survey map should be provided, if available.)

   Provide a detailed legend for each soil survey map which uses accepted USDA-SCS descriptions of the typifying pedon for each soil series (soil type). Complex associations may be described as a range of characteristics. Soil descriptions should include the following information.

   a. Soil symbol
   b. Soil series, textural phase and slope class
   c. Depth to seasonal high water table
   d. Depth to bedrock
   e. Estimated productivity group (for the proposed crop rotation).
   f. Estimated infiltration rate (surface soil)
   g. Estimated permeability of most restrictive subsoil layer

6. Representative soil borings for frequent land application and fixed spray irrigations, (to no less than 5 ft. or to the water table) are to be conducted for the typifying pedon of each soil series (soil type) and the following data collected and tests performed. All results for infiltration and permeability tests should be enclosed. Provide information on the items below:

   a. Soil symbol
   b. Soil series, textural phase and slope class
   c. Depth to seasonal high water table
   d. Depth to bedrock
   e. Estimated productivity group (for the proposed crop rotation).
   f. Estimated infiltration rate (surface soil)
   g. Estimated permeability of most restrictive subsoil layer

7. Representative soil samples are to be collected for each major soil type and analyzed for the soil parameters indicated on Page C-II-6. Samples are to be taken at a depth of 0-6 in.

8. Land Area Determination:

   a. Land area requirements are to be calculated and justified for each of the parameters listed below:

Parameters	Method of Determining Required Area
1. Nitrogen	Crop uptake, immobilization denitrification, leaching
2. Phosphorus	Crop uptake, soil adsorption
3. Potassium	Crop uptake
4. Sulfur	Crop uptake, soil adsorption leaching
5. Salts	Sodium Adsorption Ratio (SAR), leaching
6. Carbon/Nitrogen Ratio	
7. Metals(Ni, Cu, Zn, Pb, Co, Cd or other)	Cumulative loading for site life
8. Anions (As, B, Chlorides)	Leaching, Soil Adsorption
9. Calcium Carbonate Equivalency	Soil pH management
10. Other Parameters (As needed or as requested by DEQ)	

For each parameter and method of assimilation, (i.e. crop uptake, denitrification, immobilization, soil adsorption leaching, etc.), the required land area is to be justified by attaching calculations and appropriate references. Allowances for soil adsorption are to be justified by pertinent soil testing.

Provide calculations describing the nutrient value of the waste as lbs per dry ton or mg/l nitrogen (PAN), phosphorus (P_2O_5), potassium (K_2O), and any liming effects which may occur from land application.

b. Land area requirements for application of industrial wastewater or liquid sludge are to be determined and an annual water balance on a monthly basis developed integrating the following factors:

1. Monthly precipitation
2. Monthly evapotranspiration data
3. Soil percolation rates (from subsurface permeability data)
4. Monthly wastewater loading
5. Monthly storage requirement
6. Monthly storage input/drawdown

9. Does the volume of wastewater generated as determined by the water balance in 8.b. exceed the hydraulic loading rate (inches/acre/year) of the soils? _____Yes _____No

If Yes, explain how excess loading will be disposed of:

_____
_____
_____
_____
_____

10. Is the land application site owned by the applicant? _____Yes_____No.

If No, answer question 11 and have the land owner complete the authorization form, Page C-II-5.

11. Complete page C-II.5 by providing the name(s), address(es), site locations and signatures of non-applicant land owner on whose property industrial waste will be applied (A separate approval will be required for each additional owner.):

AUTHORIZATION TO LAND APPLY WASTE

(Land Owner must sign and date this approval)

As land owner, I authorize _____to land apply wastewater/sludge to my property in accordance with their VPA Form C application. This authorization will remain in effect until such time as I notify the Department of Environmental Quality in writing that this authorization has been withdrawn.

Name: _____

Address: _____

_____

Telephone: _____

Site Location(s) _____

Date: _____

Signature: _____

Attachment 1

Attach a line drawing of the facility in block diagram for showing the manufacturing or processing operations and all points where wastes are produced

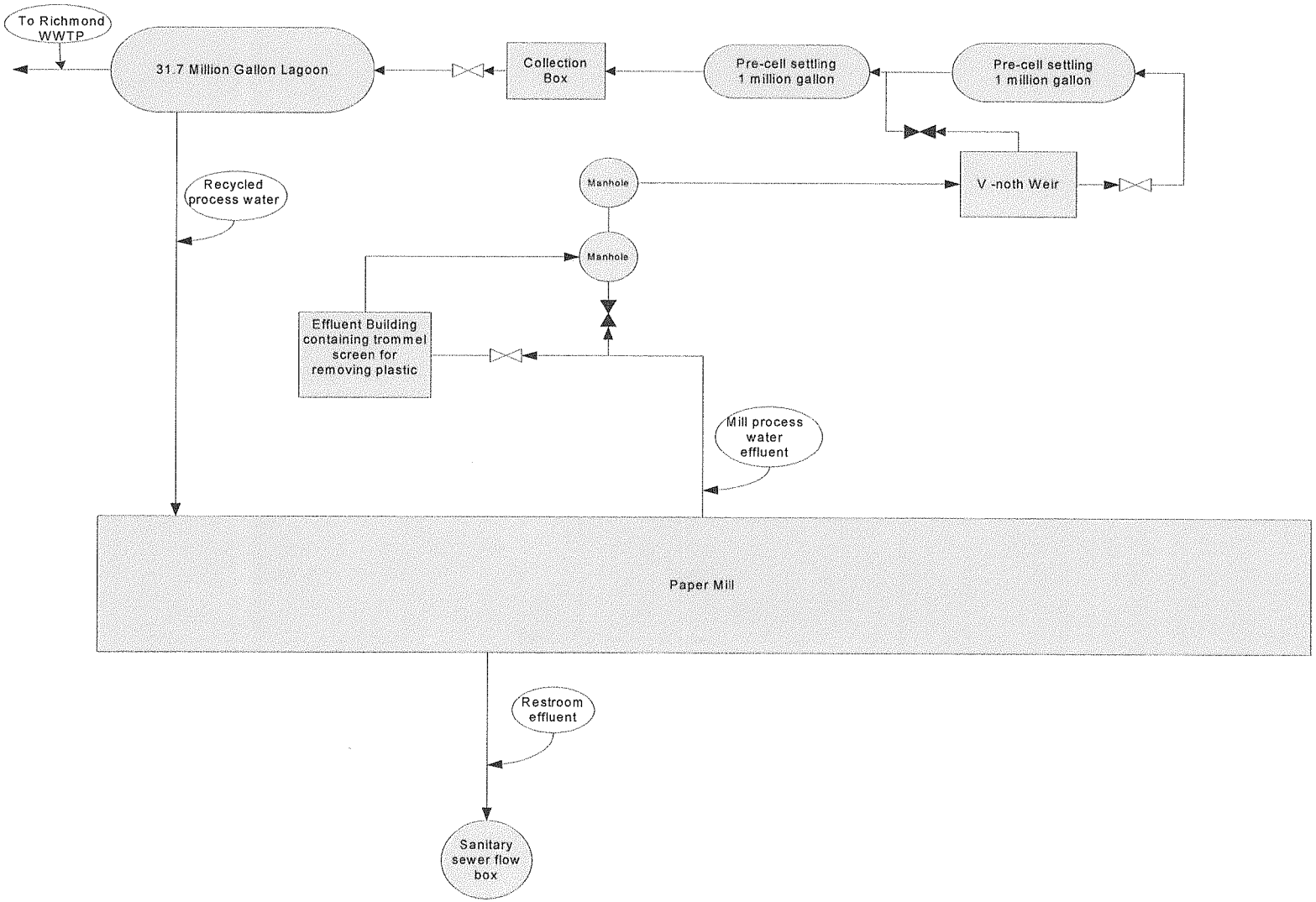

Sonoco Richmond operates a recycled paperboard manufacturing process under a Standard Industrial Classification (SIC) code of 2631. Industrial activity at the mill centers around activities required to convert recycled paper raw materials into new paperboard stock.

Secondary wood fiber in the form of various grades of wastepaper including old corrugated boxes and old newspapers are the primary raw materials for the paperboard manufacturing process. These materials are blended into a water suspension using hydropulpers. The resulting pulp slurry then flows through various cleaning and screening operations to remove over sized contaminant materials after which the pulp slurry is further refined to develop bending strength and other characteristics required by customers in the finished product. Finally, the pulp slurry flows to the wet end forming section of the paper machine where a pulp mat is formed and combined into as many as nine layers using wire covered cylinder vat formers. From this point in the process, a continuous web approximately 150 inches wide is further processed by pressing, drying, calendaring, and reeled into an intermediate product.

Occasionally, minor amounts of sizing agents, colors, wet strength resins, retention aids, defoamers, slimicides, starch, and alum are added at various points in the process to impart specific characteristics to the sheet based on customer requirements and specifications.

Associated equipment is required to be operated to support the paper manufacturing process. Two natural gas fired boilers are operated to supply steam for heating the process and drying the paper. Fork trucks and front end loaders are used to move feedstocks and finished products. Truck traffic associated with bringing in raw materials and taking out finished products is associated with the process. And maintenance activities on the paper machine, screens rolling stock, etc. is required.

Wastes are recycled to as much an extent as practical, however, some plastics and other contamination comes in with the recycled material used as feedstocks. This solid waste is screened filtered, washed to recover as much pulp as possible. The plastic waste is collected from the trammel screens in the basement on the northeast end of the paper mill and put in dumpsters and sent to local landfills as non-hazardous waste. The other potential waste streams include wastewater and sludge from the water treatment system shown above.

5. Briefly describe the design and provide a line drawing of the waste treatment facility which relates the various components of the treatment system including source(s), treatment unit(s), disposal alternatives, and flow estimates from the various process units.

The paper making process is a water intensive process and it is difficult to define exactly where the waste treatment system begins and the water processing equipment ends. For this description, the waste treatment system will be considered the lagoons and aeration equipment on the east side of Interstate 95. Water is returned from this system to the process, however it is also sent from the #4 lagoon to the City of Richmond's POTW. This metered discharge, is adjusted as necessary to maintain a State required freeboard of approximately 18 inches. The Richmond mill strives to maintain a freeboard of 32" at all times in order to eliminate the possibility of an uncontrolled spill to other surface waters.

There are two pieces of water processing equipment, not shown on the line drawing, that have a big impact on the waste treatment facility and they will be described here. All mill waste water overflow and any fiber slurry spills within the plant flow by gravity via a trench system in the mill basement into one of two Trommel screens to remove large solid particles. These large solids are collected in the Trommel Pit and are routinely carried to a dumpster via a Bobcat style loader. The filtrate, or "accepts" from the Trommels flows by gravity to the Effluent Pit and is continuously pumped back to the start of the pulping process. Also flowing to this holding tank is the internal shower water for the Trommel screens. This shower water is clean white water comprised primarily of filtrate from the paper machine cylinders. Water from the Dissolved Air Floatation Clarifier (DAF) is clean enough to be used in all processes in the paper mill. DAF water is used as primary makeup for two clean white water chests in the mill. Surplus DAF water overflows to the Surge Basin, generally a volume 50% greater than the DAF generates. Currently, 60% of the water in the Surge Basin is reused and 40% is pumped to the lagoons. The water quality flowing to the lagoons has greatly improved since the installation of the DAF.

The lagoons operate in series and provide for gradual settling of suspended solids with aeration occurring in the No.4 Lagoon for BOD reduction. Water from No.4 Lagoon is pumped directly back to the Paper Mill for use as the primary process water supply. A metered connection exists between the No.4 Lagoon and the Richmond City Wastewater Treatment Plant. Continuous discharge to the City is allowed for freeboard control and is regulated with specific pre-treatment and flow volume limits. Currently, all pre-cell sludge is managed by scraping the dry floating paper from the top of the pre-cells on an as needed basis. This material is sent to a landfill; however with reductions in the amount of suspended solids going to the lagoons, this removal has not been required since 2007. The amount of sludge accumulated in the pre-cells and the flow to the lagoon system has been greatly reduced recently with the additional re-use of the clarified water from the DAF Clarifier. The volume of material recycled through the lagoon system has been greatly reduced allowing more of the fiber processed to stay in the

product and reducing pumping costs.

This reduced water flow is allowing Sonoco to propose closing a large portion of the #4 lagoon without incurring additional treatment costs or creating operational issues with the return water. As the amount of water recycled through the lagoon is reduced, retention time needed to allow the biological reduction required to avoid fees to the City of Richmond for BOD treatment can be met. As a secondary benefit to reducing the flow to the waste treatment system, any fiber that remains in the mill is available to be used for production. Fiber sent to the waste treatment system is lost. Also, the water returned from the waste treatment system has been cooled due to time and the aeration process so keeping that water in the mill slightly reduces energy costs.

Modifications to the Wastewater System since November 5, 1999 and proposed changes

The last time this permit was approved, Environmental Solutions Incorporated (ESI) was operating a composting operation and closing several lagoons. The composting operation was closed in 2008. It was never profitable and it created some nuisance issues. The lagoon closures were completed by 2002. The mill has upgraded its processing equipment described above, most significantly with the addition of the Dissolved Air Floatation unit, allowing more water to stay in the mill process.

Currently the mill sends approximately 600,000 gallons per day to the lagoon system with 400,000 gallons per day being returned to the mill. This is more water cycling through the ponds than is necessary, however the pump returning water to the mill requires a significant flow to avoid maintenance issues. The mill has already purchased and is currently waiting for funding to install a variable speed drive on the return pump. Once that modification takes place, flow to the lagoons will be reduced to 250,000 gallons per day.

Sonoco Products Company
Richmond Paper Mill
Proposed changes to the Effluent and Lagoon System

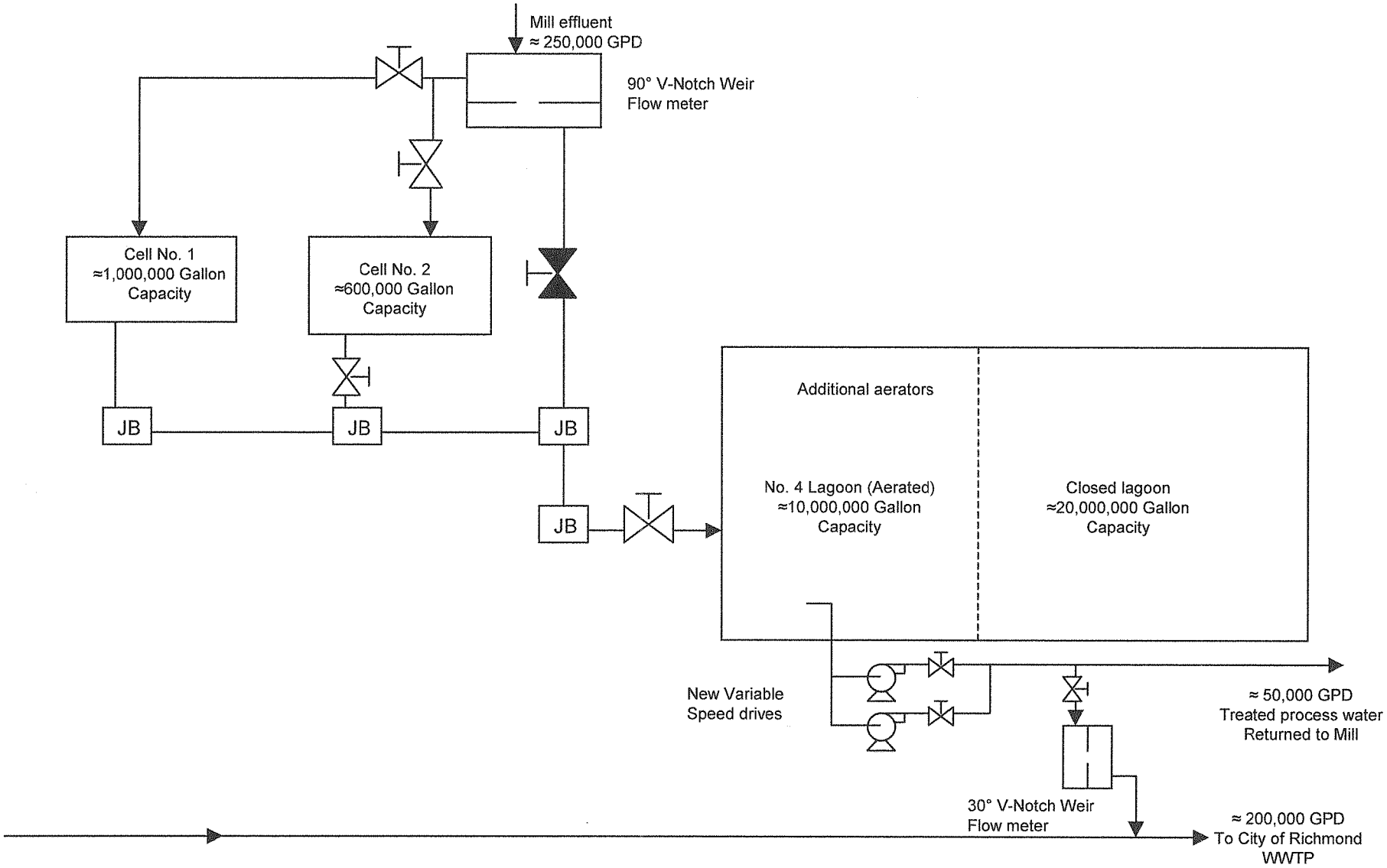

Sonoco Products Company
Richmond Paper Mill
Effluent and Lagoon System

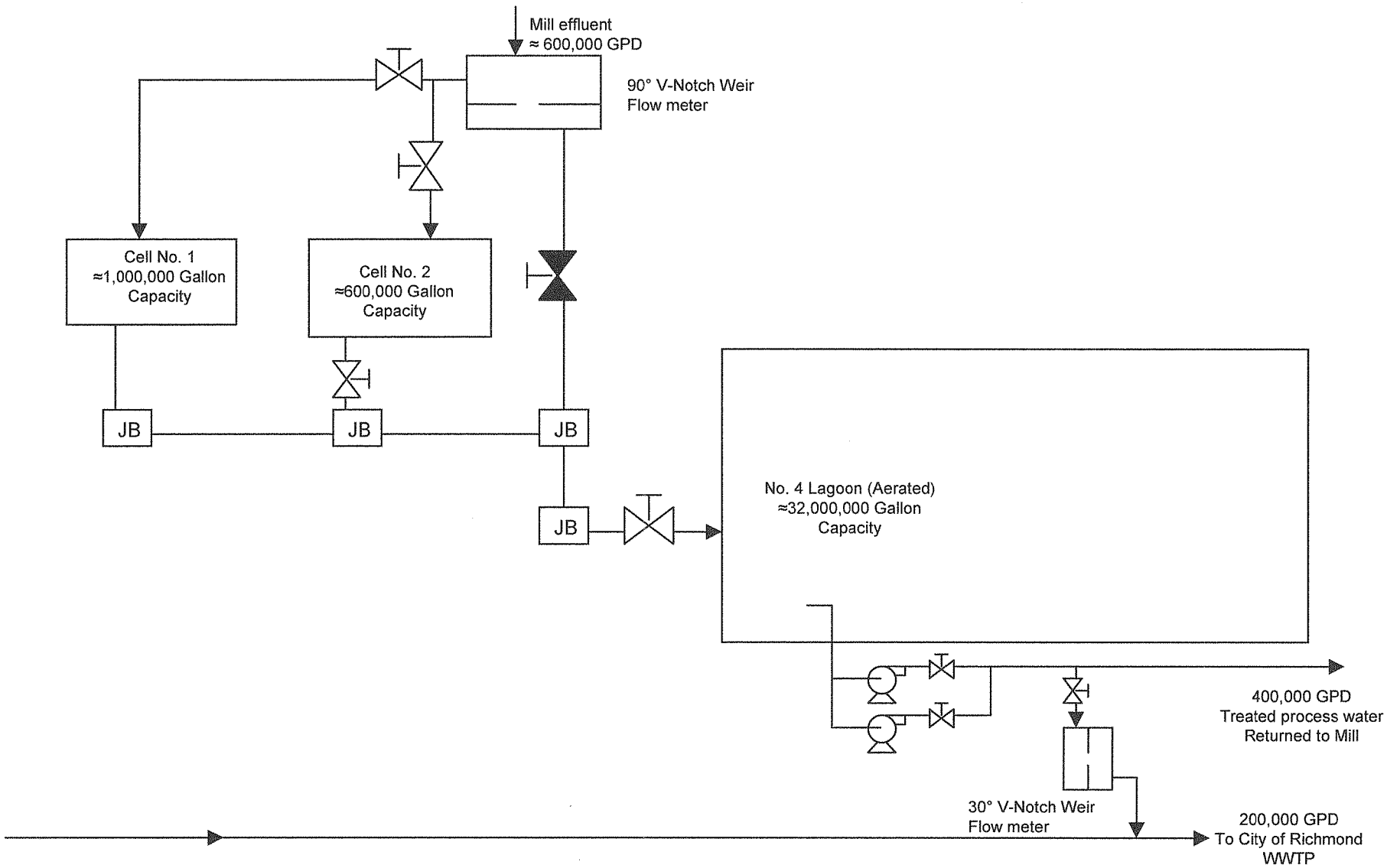

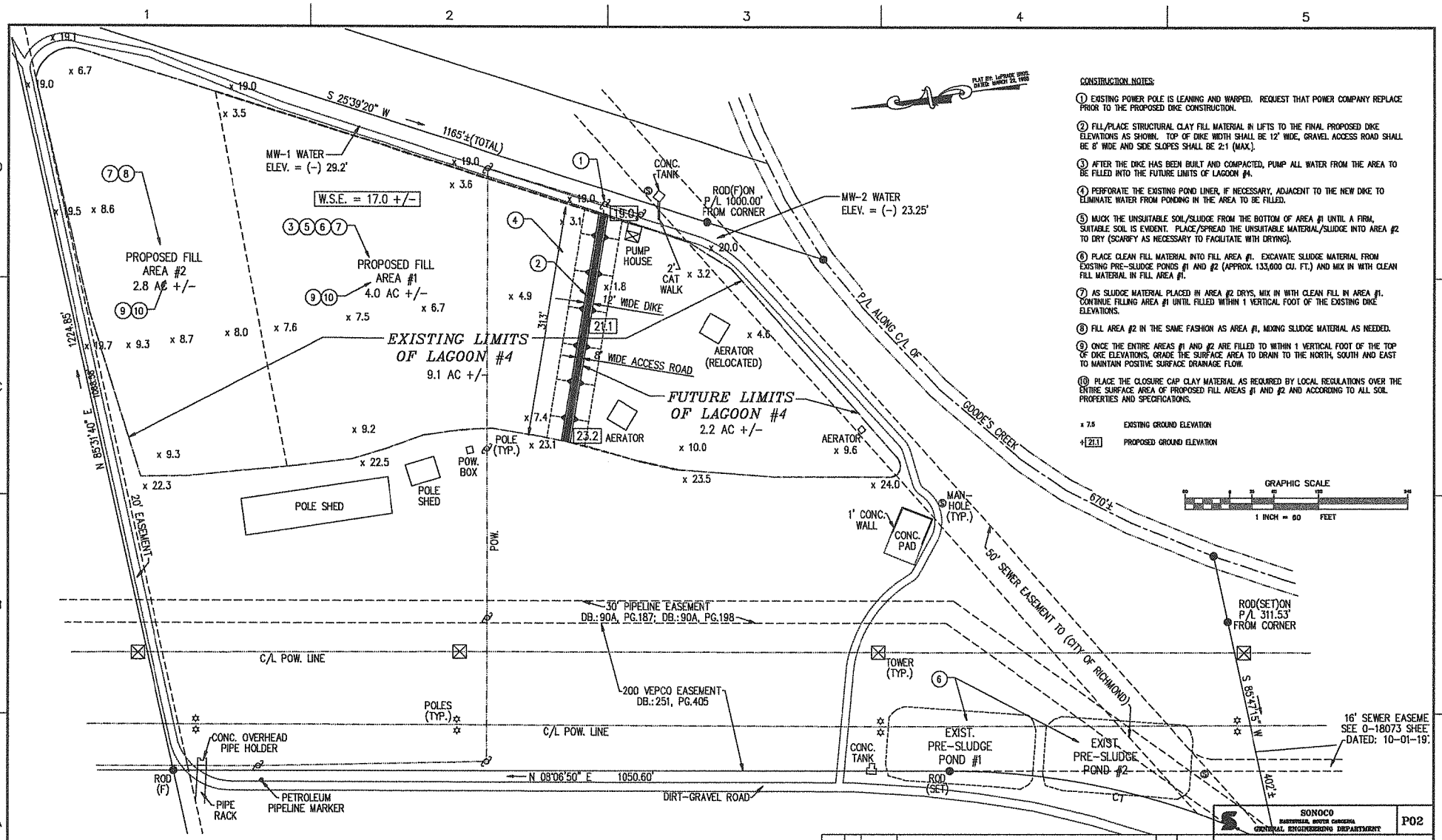

CONSTRUCTION NOTES:

1. EXISTING POWER POLE IS LEANING AND WARPED. REQUEST THAT POWER COMPANY REPLACE PRIOR TO THE PROPOSED DIKE CONSTRUCTION.
2. FILL/PLACE STRUCTURAL CLAY FILL MATERIAL IN LIFTS TO THE FINAL PROPOSED DIKE ELEVATIONS AS SHOWN. TOP OF DIKE WIDTH SHALL BE 12' WIDE, GRAVEL ACCESS ROAD SHALL BE 8' WIDE AND SIDE SLOPES SHALL BE 2:1 (MAX.).
3. AFTER THE DIKE HAS BEEN BUILT AND COMPACTED, PUMP ALL WATER FROM THE AREA TO BE FILLED INTO THE FUTURE LIMITS OF LAGOON #4.
4. PERFORATE THE EXISTING POND LINER, IF NECESSARY, ADJACENT TO THE NEW DIKE TO ELIMINATE WATER FROM PONDING IN THE AREA TO BE FILLED.
5. MUCK THE UNSUITABLE SOIL/SLUDGE FROM THE BOTTOM OF AREA #1 UNTIL A FIRM, SUITABLE SOIL IS EVIDENT. PLACE/SPREAD THE UNSUITABLE MATERIAL/SLUDGE INTO AREA #2 TO DRY (SCARIFY AS NECESSARY TO FACILITATE WITH DRYING).
6. PLACE CLEAN FILL MATERIAL INTO FILL AREA #1. EXCAVATE SLUDGE MATERIAL FROM EXISTING PRE-SLUDGE PONDS #1 AND #2 (APPROX. 133,000 CU. FT.) AND MIX IN WITH CLEAN FILL MATERIAL IN FILL AREA #1.
7. AS SLUDGE MATERIAL PLACED IN AREA #2 DRYS, MIX IN WITH CLEAN FILL IN AREA #1. CONTINUE FILLING AREA #1 UNTIL FILLED WITHIN 1 VERTICAL FOOT OF THE EXISTING DIKE ELEVATIONS.
8. FILL AREA #2 IN THE SAME FASHION AS AREA #1, MIXING SLUDGE MATERIAL AS NEEDED.
9. ONCE THE ENTIRE AREAS #1 AND #2 ARE FILLED TO WITHIN 1 VERTICAL FOOT OF THE TOP OF DIKE ELEVATIONS, GRADE THE SURFACE AREA TO DRAIN TO THE NORTH, SOUTH AND EAST TO MAINTAIN POSITIVE SURFACE DRAINAGE FLOW.
10. PLACE THE CLOSURE CAP CLAY MATERIAL AS REQUIRED BY LOCAL REGULATIONS OVER THE ENTIRE SURFACE AREA OF PROPOSED FILL AREAS #1 AND #2 AND ACCORDING TO ALL SOIL PROPERTIES AND SPECIFICATIONS.

x 7.5 EXISTING GROUND ELEVATION

+ 21.1 PROPOSED GROUND ELEVATION

REV. NO.	BY	DATE	REVISION	CHECK	DATE
A	BCC	5/8/09	ISSUED FOR REVIEW	CC	5/8/09

REVISIONS BY AUTOCAD ONLY

IT CAN BE DONE SAFELY

SONOCO
HARTSVILLE, SOUTH CAROLINA
GENERAL ENGINEERING DEPARTMENT

P02

RICHMOND, VIRGINIA
PAPER DIVISION – ENVIRONMENTAL
PARTIAL CLOSURE OF NO. 4 LAGOON
PRELIMINARY SITE PLAN

SUBD. NO. N/A	DIV. PAPER	DEPT. ENVIRONMENTAL	PLAN DATE 5/8/09
DRAWN BY BCC	DATE 5/7/09	CHK'D BY CC	DATE 5/8/09
SCALE 1"=100'			DATE 5/8/09
SHEET NO. 2 OF 2			DWG. NO. G2009041P02

SONOCO PRODUCTS COMPANY, HARTSVILLE, S.C.

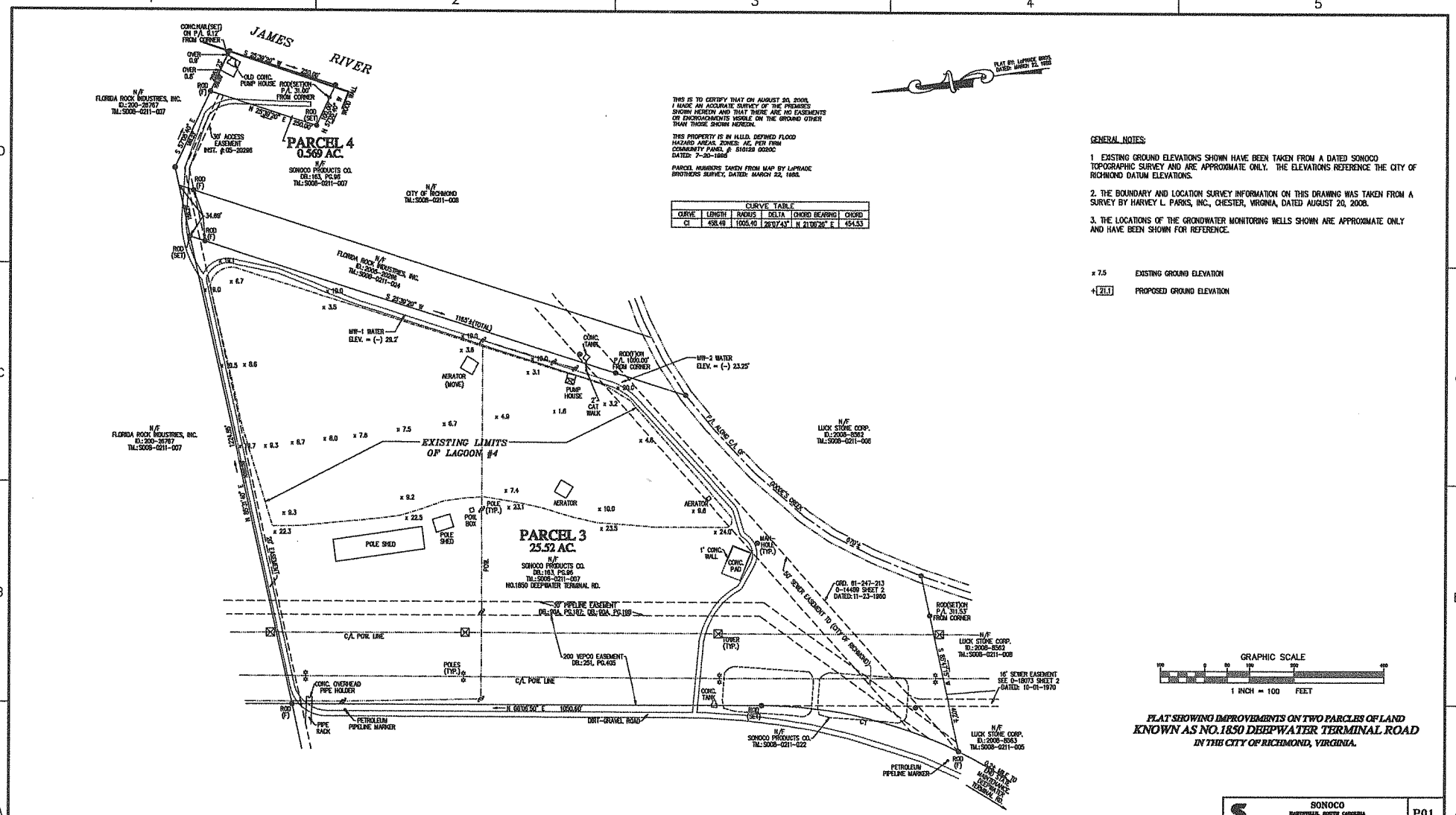

THIS IS TO CERTIFY THAT ON AUGUST 20, 2008, I MADE AN ACCURATE SURVEY OF THE PREMISES SHOWN HEREON AND THAT THERE ARE NO EASEMENTS OR ENCROACHMENTS VISIBLE ON THE GROUND OTHER THAN THOSE SHOWN HEREON.

THIS PROPERTY IS IN H.U.D. DEFINED FLOOD HAZARD AREAS. ZONES: AE, PER FIRM COMMUNITY PANEL # 510129 0020C DATED: 7-20-1988

PARCEL NUMBERS TAKEN FROM MAP BY LaPRADE BROTHERS SURVEY, DATED: MARCH 22, 1988.

CURVE TABLE					
CURVE	LENGTH	RADIUS	DELTA	CHORD BEARING	CHORD
C1	458.49	1005.40	26°07'43"	N 21°06'26" E	454.53

GENERAL NOTES:

1. EXISTING GROUND ELEVATIONS SHOWN HAVE BEEN TAKEN FROM A DATED SONOCO TOPOGRAPHIC SURVEY AND ARE APPROXIMATE ONLY. THE ELEVATIONS REFERENCE THE CITY OF RICHMOND DATUM ELEVATIONS.
2. THE BOUNDARY AND LOCATION SURVEY INFORMATION ON THIS DRAWING WAS TAKEN FROM A SURVEY BY HARVEY L. PARKS, INC., CHESTER, VIRGINIA, DATED AUGUST 20, 2008.
3. THE LOCATIONS OF THE GROUNDWATER MONITORING WELLS SHOWN ARE APPROXIMATE ONLY AND HAVE BEEN SHOWN FOR REFERENCE.

x 7.5 EXISTING GROUND ELEVATION

+21.1 PROPOSED GROUND ELEVATION

FLAT SHOWING IMPROVEMENTS ON TWO PARCELS OF LAND KNOWN AS NO.1850 DEEPWATER TERMINAL ROAD IN THE CITY OF RICHMOND, VIRGINIA.

REV. NO.	BY	DATE	REVISION	CHECK	DATE
A	BOC	5/8/09	ISSUED FOR REVIEW	CC	5/8/09

REVISIONS BY AUTOCAD ONLY

IT CAN BE DONE SAFELY

SONOCO PRODUCTS COMPANY, HARTSVILLE, S.C.

SONOCO
HARTSVILLE, SOUTH CAROLINA
GENERAL ENGINEERING DEPARTMENT

P01

RICHMOND, VIRGINIA
PAPER DIVISION – ENVIRONMENTAL
PARTIAL CLOSURE OF NO. 4 LAGOON
EXISTING CONDITIONS

SCALE DR. N/A	DIV. PAPER	DEPT. ENVIRONMENTAL	PLT DATE 5/8/09
DRWN BY BOC	DATE 5/7/09	CHK. BY CC	DATE 5/8/09
		APP. BY CC	DATE 5/8/09
SCALE 1"=100'		DWG. NO. G2009041P01	
SHEET NO. 1 of 2			

Richmond Sludge Management Plan

The Richmond sludge management plan is to minimize as much sludge generation as possible. The mill has been moving and will continue to reduce the amount of material sent to the lagoons by reducing the water flow and reusing water. There must be a purge form the system as it is currently designed and that purge is to the City of Richmond's POTW.

The operation of the precells allows for the removal of fiber before this material can go to the #4 lagoon. This fiber floats, so determining the amount of material in the pre-cells is difficult. Past practice has been to scrap the dried floating sludge from the precells when the amount of solids in the effluent from the precells indicated that they were full. In the past, with the compositing operation managed by Environmental Solution Incorporated (ESI), this material was incorporated into compost. Prior to the composting operation, this material was sent to a landfill. Since the composting operation, Sonoco is planning to return to the practice of scrapping off the dried sludge on an as needed basis and sending this material to a landfill.

Sludge generation in the #4 lagoon is managed currently by allowing the sludge to digest over time. The suspended solids limit to the City allows some sludge removal. At current solids loading rates, it will take many decades before the sludge accumulation in the #4 lagoon would cause an operational problem. However, Sonoco is proposing to close two thirds of the #4 lagoon to decrease liability and improve the aesthetic nature of the water treatment process.

Proposed #4 Lagoon Partial Closure Plan

This closure plan will be designed to minimize the need for further maintenance and regulation of the area now occupied by a portion of the #4 lagoon. However we ask that the DEQ consider the fact that one third of lagoon #4 will still be operated under the NPDES permit. The plan is to build a dike through Lagoon #4 and pump the water from the stabilized side to the operating side. The sludge that remains in the stabilized portion of lagoon #4 will be solidified using suitable fill material, similar to the material used to fill the #2 and #3 Lagoon. The current sludge floating on the pre-cells will also be moved into the stabilized portion of Lagoon #4 as suitable fill material.

This closure plan is based on Virginia Department of Environmental Quality Guidance for closing municipal wastewater treatment lagoons (attached). The potential hazards associated with municipal waste treatment sludge, unknown contamination for sources beyond the treatment facilities control, are lower in the case of a recycle mill where the main constituents of the sludge are paper and residue from the paper making process. The potential for pathogens and other similar hazards is greatly reduce. Sonoco is seeking feedback from the DEQ on how to plan and manage this closure to meet DEQ guidelines. We would like to discuss DEQ concerns about the plan as outlined here and in a separate submittal provide all the details that DEQ feels is necessary. We are including in this submittal, a preliminary dike and closure plan.