Chesapeake VIRGINIA

City of Chesapeake

Chesapeake Water Treatment Plant
3550 Battlefield Blvd S
Chesapeake, VA 23322-2423
(757) 382-3550
Fax (757) 421-448

June 6, 2008

Commonwealth of Virginia
Department of Environmental Quality
Tidewater Regional Office
5636 Southern Boulevard
Virginia Beach, VA 23462

JUN 2008
RECEIVED
DEQ TIDEWATER
REGIONAL OFFICE

Attn: Robert E. Smithson, Environmental Engineer Senior

Re: Re-issuance of VPDES Permit No. VA0091405
Lake Gaston WTP, Chesapeake, VA

Dear Mr. Smithson:

Please find enclosed a completed application for the re-issuance of the above permit. I will be happy to address any questions you have. Call me anytime at 382-3550.

Sincerely,

Craig Maples

A. Craig Maples
Water Resources Administrator

Attachment

cc: W/O Attachment:
James K. Walski, P.E., Public Utilities Director
William T. Johnson, Chief Operator, LGWTP

Chesapeake
VIRGINIA

Post Office Box 15225
Chesapeake, Virginia 23322-5225

JUN 2008
RECEIVED
DEQ TIDEWATER
REGIONAL OFFICE

06/19/08

Tom Johnson
Chief Operator
Lake Gaston WTP
5416 West Military Hwy
Chesapeake, VA 23321
Office (757) 382-3754
Cell (757) 286-7288
E-mail: wtjohnson@cityofchesapeake.net

Mr. Smithson,

Enclosed is the additional information needed to complete the City of Chesapeake Lake Gaston Water Treatment Plant's Wastewater Discharge Permit Application. Included is the required metals testing results, a description of Lake Gaston's Sludge Handling Process, a listing of the sludge disposal route, and a map outlining the sludge disposal route.

Any questions, clarification, or additional information that may need resolution please feel free to contact me.

Thank you,

Tom Johnson

Tom Johnson, Chief Operator

Please print or type in the unshaded areas only
(fill-in areas are spaced for elite type, i.e., 12 characters/inch).

Form Approved. OMB No. 2040-0086. Approval expires 5-31-9

FORM 1 GENERAL

EPA

U.S. ENVIRONMENTAL PROTECTION AGENCY

GENERAL INFORMATION

Consolidated Permits Program

(Read the "General Instructions" before starting.)

I. EPA I.D. NUMBER

F VA0091405

LABEL ITEMS

I. EPA I.D. NUMBER

III. FACILITY NAME

V. FACILITY MAILING ADDRESS

VI. FACILITY LOCATION

PLEASE PLACE LABEL IN THIS SPACE

GENERAL INSTRUCTIONS

If a preprinted label has been provided, affix it in the designated space. Review the information carefully; if any of it is incorrect, cross through it and enter the correct data in the appropriate fill-in area below. Also, if any of the preprinted data is absent *(the area to the left of the label space lists the information that should appear)*, please provide it in the proper fill-in area*(s)* below. If the label is complete and correct, you need not complete Items I, III, V, and VI *(except VI-B which must be completed regardless)*. Complete all items if no label has been provided. Refer to the instructions for detailed item descriptions and for the legal authorizations under which this data is collected.

II. POLLUTANT CHARACTERISTICS

INSTRUCTIONS: Complete A through J to determine whether you need to submit any permit application forms to the EPA. If you answer "yes" to any questions, you must submit this form and the supplemental form listed in the parenthesis following the question. Mark "X" in the box in the third column if the supplemental form is attached. If you answer "no" to each question, you need not submit any of these forms. You may answer "no" if your activity is excluded from permit requirements; see Section C of the instructions. See also, Section D of the instructions for definitions of bold—faced terms.

SPECIFIC QUESTIONS	MARK 'X' YES	MARK 'X' NO	MARK 'X' FORM ATTACHED
A. Is this facility a **publicly owned treatment works** which results in a **discharge** to **waters of the U.S.**? (FORM 2A)		X	
B. Does or will this facility *(either existing or proposed)* include a **concentrated animal feeding operation** or **aquatic animal production facility** which results in a **discharge to waters of the U.S.**? (FORM 2B)		X	
C. Is this a facility which currently results in **discharges to waters of the U.S.** other than those described in A or B above? (FORM 2C)	X		
D. Is this a proposed facility *(other than those described in A or B above)* which will result in a **discharge** to **waters of the U.S.**? (FORM 2D)		X	
E. Does or will this facility treat, store, or dispose of **hazardous wastes**? (FORM 3)		X	
F. Do you or will you inject at this facility industrial or municipal effluent below the lowermost stratum containing, within one quarter mile of the well bore, underground sources of drinking water? (FORM 4)		X	
G. Do you or will you inject at this facility any produced water or other fluids which are brought to the surface in connection with conventional oil or natural gas production, inject fluids used for enhanced recovery of oil or natural gas, or inject fluids for storage of liquid hydrocarbons? (FORM 4)		X	
H. Do you or will you inject at this facility fluids for special processes such as mining of sulfur by the Frasch process, solution mining of minerals, in situ combustion of fossil fuel, or recovery of geothermal energy? (FORM 4)		X	
I. Is this facility a proposed **stationary source** which is one of the 28 industrial categories listed in the instructions and which will potentially emit 100 tons per year of any air pollutant regulated under the Clean Air Act and may affect or be located in an **attainment area**? (FORM 5)		X	
J. Is this facility a proposed **stationary source** which is NOT one of the 28 industrial categories listed in the instructions and which will potentially emit 250 tons per year of any air pollutant regulated under the Clean Air Act and may affect or be located in an **attainment area**? (FORM 5)		X	

III. NAME OF FACILITY

SKIP LAKE GASTON WATER TREATMENT PLANT

IV. FACILITY CONTACT

A. NAME & TITLE *(last, first, & title)*: MAPLES CRAIG WATER ADMIN.

B. PHONE *(area code & no.)*: 757 382 3550

V. FACILITY MAILING ADDRESS

A. STREET OR P.O. BOX: 3550 S BATTLEFIELD BLVD

B. CITY OR TOWN: CHESAPEAKE

C. STATE: VA

D. ZIP CODE: 23322

JUN 2008 RECEIVED DEQ TIDEWATER REGIONAL OFF

VI. FACILITY LOCATION

A. STREET, ROUTE NO. OR OTHER SPECIFIC IDENTIFIER: 5416 MILITARY HWY WEST

B. COUNTY NAME:

C. CITY OR TOWN: CHESAPEAKE

D. STATE: VA

E. ZIP CODE: 23371

F. COUNTY CODE *(if known)*:

CONTINUED FROM THE FRONT

VII. SIC CODES *(4-digit, in order of priority)*

A. FIRST	B. SECOND
4941 (specify) WATER SUPPLY	(specify)
C. THIRD	**D. FOURTH**
(specify)	(specify)

VIII. OPERATOR INFORMATION

A. NAME: CITY OF CHESAPEAKE DEPT OF PUBLIC UTIL.

B. Is the name listed in Item VIII-A also owner? ☐ YES ☒ NO

C. STATUS OF OPERATOR *(Enter the appropriate letter into the answer box; if "Other", specify.)*
F = FEDERAL; S = STATE; P = PRIVATE; M = PUBLIC *(other than federal or state)*; O = OTHER *(specify)*: M (specify)

D. PHONE *(area code & no.)*: A 757 382 6401

E. STREET OR P.O. BOX: 306 CEDAR ROAD

F. CITY OR TOWN: CHESAPEAKE

G. STATE: VA **H. ZIP CODE**: 23322

IX. INDIAN LAND
Is the facility located on Indian lands? ☐ YES ☒ NO

X. EXISTING ENVIRONMENTAL PERMITS

A. NPDES *(Discharges to Surface Water)*: 9 N VA0091405	**D. PSD** *(Air Emissions from Proposed Sources)*: 9 P
B. UIC *(Underground Injection of Fluids)*: 9 U VAS5R211MCHE	**E. OTHER** *(specify)*: 9 (specify)
C. RCRA *(Hazardous Wastes)*: 9 R	**E. OTHER** *(specify)*: 9 (specify)

XI. MAP

Attach to this application a topographic map of the area extending to at least one mile beyond property boundaries. The map must show the outline of the facility, the location of each of its existing and proposed intake and discharge structures, each of its hazardous waste treatment, storage, or disposal facilities, and each well where it injects fluids underground. Include all springs, rivers and other surface water bodies in the map area. See instructions for precise requirements.

XII. NATURE OF BUSINESS *(provide a brief description)*

MUNICIPAL WATER TREATMENT PLANT PRIMARILY ENGAGED IN DISTRIBUTING WATER FOR SALE FOR DOMESTIC, COMMERCIAL, AND INDUSTRIAL USE. WASTE STREAM INCLUDES FLOWS FROM UF MEMBRANE CONCENTRATE, MANGANESE CONTACTOR BACKWASH WATER, MEMBRANE CLEANING SOLUTION, STRAINER BACKWASH WASTE, AND SUMP PUMP DISCHARGE.

XIII. CERTIFICATION *(see instructions)*

I certify under penalty of law that I have personally examined and am familiar with the information submitted in this application and all attachments and that, based on my inquiry of those persons immediately responsible for obtaining the information contained in the application, I believe that the information is true, accurate and complete. I am aware that there are significant penalties for submitting false information, including the possibility of fine and imprisonment.

A. NAME & OFFICIAL TITLE *(type or print)*	B. SIGNATURE	C. DATE SIGNED
A. CRAIG MAPLES, WATER RESOURCES MNGMT ADMINISTRATOR	A. Craig Maples	6-4-08

COMMENTS FOR OFFICIAL USE ONLY

ase print or type in the unshaded areas only.

EPA I.D. NUMBER (copy from Item 1 of Form 1) VA0091405

Form Approved
OMB No. 2040-0086
Approval expires 5-31-92

FORM 2C NPDES

U.S. ENVIRONMENTAL PROTECTION AGENCY
APPLICATION FOR PERMIT TO DISCHARGE WASTEWATER
EXISTING MANUFACTURING, COMMERCIAL, MINING AND SILVICULTURAL OPERATIONS
Consolidated Permits Program

I. OUTFALL LOCATION

For each outfall, list the latitude and longitude of its location to the nearest 15 seconds and the name of the receiving water.

A. OUTFALL NUMBER (list)	B. LATITUDE 1. DEG.	2. MIN.	3. SEC.	C. LONGITUDE 1. DEG.	2. MIN.	3. SEC.	D. RECEIVING WATER (name)
001	36	46	33	76	27	30	UNNAMED TRIBUTARY TO GOOSE CREEK

II. FLOWS, SOURCES OF POLLUTION, AND TREATMENT TECHNOLOGIES

A. Attach a line drawing showing the water flow through the facility. Indicate sources of intake water, operations contributing wastewater to the effluent, and treatment units labeled to correspond to the more detailed descriptions in Item B. Construct a water balance on the line drawing by showing average flows between intakes, operations, treatment units, and outfalls. If a water balance cannot be determined (e.g., for certain mining activities), provide a pictorial description of the nature and amount of any sources of water and any collection or treatment measures.

B. For each outfall, provide a description of: (1) All operations contributing wastewater to the effluent, including process wastewater, sanitary wastewater, cooling water, and storm water runoff; (2) The average flow contributed by each operation; and (3) The treatment received by the wastewater. Continue on additional sheets if necessary.

OUTFALL NO. (list)	2. OPERATION(S) CONTRIBUTING FLOW a. OPERATION (list)	b. AVERAGE FLOW (include units)	3. TREATMENT a. DESCRIPTION	b. LIST CODES FROM TABLE 2C-1	
001	WATER TREATMENT PROCESS FLOWS CONSIST OF: UF MEMBRANE CONCENTRATE, MANGANESE CONTACTOR BACKWASH WATER, MEMBRANE CLEANING SOLUTION, PLANT SANITARY EFFLUENT, STRAINER BACKWASH WASTE, AND SUMP PUMP DISCHARGE.	0.4-1.0 MGD	SEDIMENTATION, DECHLORINATION, POST AERATION	1-U	2-E

JUN 2006 RECEIVED DEQ/DENR REGIONAL OFFICE

FICIAL USE ONLY (effluent guidelines sub-categories)

ONTINUED FROM THE FRONT

. Except for storm runoff, leaks, or spills, are any of the discharges described in Items II-A or B intermittent or seasonal?

☐ YES *(complete the following table)* ☒ NO *(go to Section III)*

1. OUTFALL NUMBER *(list)*	2. OPERATION(s) CONTRIBUTING FLOW *(list)*	3. FREQUENCY a. DAYS PER WEEK *(specify average)*	3. FREQUENCY b. MONTHS PER YEAR *(specify average)*	4. FLOW a. FLOW RATE *(in mgd)* 1. LONG TERM AVERAGE	4. FLOW a. FLOW RATE *(in mgd)* 2. MAXIMUM DAILY	4. FLOW b. TOTAL VOLUME *(specify with units)* 1. LONG TERM AVERAGE	4. FLOW b. TOTAL VOLUME *(specify with units)* 2. MAXIMUM DAILY	4. FLOW c. DURATION *(in days)*

I. PRODUCTION

A. Does an effluent guideline limitation promulgated by EPA under Section 304 of the Clean Water Act apply to your facility?

☐ YES *(complete Item III-B)* ☒ NO *(go to Section IV)*

B. Are the limitations in the applicable effluent guideline expressed in terms of production *(or other measure of operation)*?

☐ YES *(complete Item III-C)* ☒ NO *(go to Section IV)*

C. If you answered "yes" to Item III-B, list the quantity which represents an actual measurement of your level of production, expressed in the terms and units used in the applicable effluent guideline, and indicate the affected outfalls.

1. AVERAGE DAILY PRODUCTION a. QUANTITY PER DAY	b. UNITS OF MEASURE	c. OPERATION, PRODUCT, MATERIAL, ETC. *(specify)*	2. AFFECTED OUTFALLS *(list outfall numbers)*

V. IMPROVEMENTS

A. Are you now required by any Federal, State or local authority to meet any implementation schedule for the construction, upgrading or operation of wastewater treatment equipment or practices or any other environmental programs which may affect the discharges described in this application? This includes, but is not limited to, permit conditions, administrative or enforcement orders, enforcement compliance schedule letters, stipulations, court orders, and grant or loan conditions.

☐ YES *(complete the following table)* ☒ NO *(go to Item IV-B)*

1. IDENTIFICATION OF CONDITION, AGREEMENT, ETC.	2. AFFECTED OUTFALLS a. NO.	2. AFFECTED OUTFALLS b. SOURCE OF DISCHARGE	3. BRIEF DESCRIPTION OF PROJECT	4. FINAL COMPLIANCE DATE a. REQUIRED	4. FINAL COMPLIANCE DATE b. PROJECTED

B. OPTIONAL: You may attach additional sheets describing any additional water pollution control programs *(or other environmental projects which may affect your discharges)* you now have underway or which you plan. Indicate whether each program is now underway or planned, and indicate your actual or planned schedules for construction. ☐ MARK "X" IF DESCRIPTION OF ADDITIONAL CONTROL PROGRAMS IS ATTACHED

CONTINUE ON PAGE 3

CONTINUED FROM PAGE 2

EPA I.D. NUMBER (copy from Item 1 of Form 1) VA0091405

V. INTAKE AND EFFLUENT CHARACTERISTICS

A, B, & C: See instructions before proceeding — Complete one set of tables for each outfall — Annotate the outfall number in the space provided. NOTE: Tables V-A, V-B, and V-C are included on separate sheets numbered V-1 through V-9.

D. Use the space below to list any of the pollutants listed in Table 2c-3 of the instructions, which you know or have reason to believe is discharged or may be discharged from any outfall. For every pollutant you list, briefly describe the reasons you believe it to be present and report any analytical data in your possession.

1. POLLUTANT	2. SOURCE	1. POLLUTANT	2. SOURCE
NONE			

VI. POTENTIAL DISCHARGES NOT COVERED BY ANALYSIS

Is any pollutant listed in Item V-C a substance or a component of a substance which you currently use or manufacture as an intermediate or final product or byproduct?

☐ YES (list all such pollutants below) ☒ NO (go to Item VI-B)

NTINUED FROM THE FRONT

. BIOLOGICAL TOXICITY TESTING DATA

Do you have any knowledge or reason to believe that any biological test for acute or chronic toxicity has been made on any of your discharges or on a eceiving water in relation to your discharge within the last 3 years?

☒ YES *(identify the test(s) and describe their purposes below)* ☐ NO *(go to Section VIII)*

1. CERIODAPHNIA DUBIA - 48 HOUR STATIC ACUTE TEST AND CHRONIC.
2. PIMEPHATES PROMELAS - 48 HOUR STATIC ACUTE TEST AND CHRONIC.

CHRONIC TEST INCLUDES:

CHRONIC 3-BROOD STATIC RENEWAL SURVIVAL AND REPRODUCTIVE TEST USING CERIODAPHNIA DUBIA.

CHRONIC 7-DAY STATIC RENEWAL SURVIVAL AND GROWTH TEST USING PINEPHALES PROMELAS.

SCHEDULE OF ANALYSIS:

1ST QTR - MARCH 13, 14, & 16, 2006
2ND QTR - JUNE 5, 7, & 9, 2006
3RD QTR - SEPT 13, 15, & 18, 2006
4TH QTR - NOV 12, 14, & 16, 2006
5TH QTR - MARCH 4, 6, & 8, 2007

FIRST ANNUAL:
SEPT 16, 18, & 20, 2007

I. CONTRACT ANALYSIS INFORMATION

Were any of the analyses reported in Item V performed by a contract laboratory or consulting firm?

☐ YES *(list the name, address, and telephone number of, and pollutants analyzed by, each such laboratory or firm below)* ☒ NO *(go to Section IX)*

A. NAME	B. ADDRESS	C. TELEPHONE *(area code & no.)*	D. POLLUTANTS ANALYZED *(list)*

JUN 2008 RECEIVED DEQ TIDEWATER REGIONAL OFFICE

CERTIFICATION

certify under penalty of law that this document and all attachments were prepared under my direction or supervision in accordance with a system designed to ssure that qualified personnel properly gather and evaluate the information submitted. Based on my inquiry of the person or persons who manage the system or hose persons directly responsible for gathering the information, the information submitted is, to the best of my knowledge and belief, true, accurate, and complete. am aware that there are significant penalties for submitting false information, including the possibility of fine and imprisonment for knowing violations.

A. NAME & OFFICIAL TITLE *(type or print)*	B. PHONE NO. *(area code & no.)*
A. Craig Maples, Water Resources	757-482-3550
C. SIGNATURE	D. DATE SIGNED
Management Administrator	6-4-08

PLEASE PRINT OR TYPE IN THE UNSHADED AREAS ONLY. You may report some or all of this information on separate sheets *(use the same format)* instead of completing these pages. SEE INSTRUCTIONS.

EPA I.D. NUMBER *(copy from Item 1 of Form 1)*: VAØØ91405

V. INTAKE AND EFFLUENT CHARACTERISTICS *(continued from page 3 of Form 2-C)*

OUTFALL NO

PART A - You must provide the results of at least one analysis for every pollutant in this table. Complete one table for each outfall. See instructions for additional details.

1. POLLUTANT	2. EFFLUENT a. MAXIMUM DAILY VALUE (1) CONCENTRATION	(2) MASS	b. MAXIMUM 30 DAY VALUE *(if available)* (1) CONCENTRATION	(2) MASS	c. LONG TERM AVRG. VALUE *(if available)* (1) CONCENTRATION	(2) MASS	d. NO. OF ANALYSES	3. UNITS *(specify if blank)* a. CONCENTRATION	b. MASS	4. INTAKE *(optional)* a. LONG TERM AVERAGE VALUE (1) CONCENTRATION	(2) MASS	b. NO. OF ANALYSES
a. Biochemical Oxygen Demand *(BOD)*	N/A											
b. Chemical Oxygen Demand *(COD)*	N/A											
c. Total Organic Carbon *(TOC)*	N/A											
d. Total Suspended Solids *(TSS)*	1Ø	78			6	28	12	MG/L	LBS/DAY			
e. Ammonia *(as N)*	Ø.38	3			Ø.38		1	MG/L	LBS/DAY			
f. Flow	VALUE Ø.935		VALUE		VALUE Ø.565		2	MG/L	MG/DAY	VALUE		
g. Temperature *(winter)*	VALUE N/A		VALUE		VALUE			°C		VALUE		
h. Temperature *(summer)*	VALUE N/A		VALUE		VALUE			°C		VALUE		
i. pH	MINIMUM 6.23	MAXIMUM 12.35	MINIMUM 6.5Ø	MAXIMUM 8.82			46	STANDARD UNITS				

PART B - Mark "X" in column 2-a for each pollutant you know or have reason to believe is present. Mark "X" in column 2-b for each pollutant you believe to be absent. If you mark column 2a for any pollutant which is limited either directly, or indirectly but expressly, in an effluent limitations guideline, you must provide the results of at least one analysis for that pollutant. For other pollutants for which you mark column 2a, you must provide quantitative data or an explanation of their presence in your discharge. Complete one table for each outfall. See the instructions for additional details and requirements.

1. POLLUTANT AND CAS NO. *(if available)*	2. MARK 'X' a. BELIEVED PRESENT	b. BELIEVED ABSENT	3. EFFLUENT a. MAXIMUM DAILY VALUE (1) CONCENTRATION	(2) MASS	b. MAXIMUM 30 DAY VALUE *(if available)* (1) CONCENTRATION	(2) MASS	c. LONG TERM AVRG. VALUE *(if available)* (1) CONCENTRATION	(2) MASS	d. NO. OF ANALYSES	4. UNITS a. CONCENTRATION	b. MASS	5. INTAKE *(optional)* a. LONG TERM AVERAGE VALUE (1) CONCENTRATION	(2) MASS	b. NO. OF ANALYSES
a. Bromide (24959-67-9)		X												
b. Chlorine, Total Residual		X												
c. Color		X												
d. Fecal Coliform		X												
e. Fluoride (16984-48-8)		X												
f. Nitrate-Nitrite *(as N)*		X												

CONTINUE ON REVERSE

1. POLLUTANT AND CAS NO. (if available)	2. MARK 'X' a. BELIEVED PRESENT	b. BELIEVED ABSENT	3. EFFLUENT a. MAXIMUM DAILY VALUE (1) CONCENTRATION	(2) MASS	b. MAXIMUM 30 DAY VALUE (if available) (1) CONCENTRATION	(2) MASS	c. LONG TERM AVRG. VALUE (if available) (1) CONCENTRATION	(2) MASS	d. NO. OF ANALYSES	4. INTAKE a. CONCENTRATION	b. MASS	5. LONG TERM AVERAGE VALUE (1) CONCENTRATION	(2) MASS	b. NO. OF ANALYSES
g. Nitrogen, Total Organic (as N)		X												
h. Oil and Grease		X												
i. Phosphorus (as P), Total (7723-14-0)		X												
j. Radioactivity														
(1) Alpha, Total		X												
(2) Beta, Total		X												
(3) Radium, Total		X												
(4) Radium 226, Total		X												
k. Sulfate (as SO_4) (14808-79-8)		X												
l. Sulfide (as S)		X												
m. Sulfite (as SO_3) (14265-45-3)		X												
n. Surfactants		X												
o. Aluminum, Total (7429-90-5)		X												
p. Barium, Total (7440-39-3)		X												
q. Boron, Total (7440-42-8)		X												
r. Cobalt, Total (7440-48-4)		X												
s. Iron, Total (7439-89-6)		X												
t. Magnesium, Total (7439-95-4)		X												
u. Molybdenum, Total (7439-98-7)		X												
v. Manganese, Total (7439-96-5)		X												
w. Tin, Total (7440-31-5)		X												
x. Titanium, Total (7440-32-6)		X												

CONTINUE ON PAGE V-3

CONTINUED FROM PAGE 3 OF FORM 2-C VA0091405 | 001

PART C - If you are a primary industry and this outfall contains process wastewater, refer to Table 2c-2 in the instructions to determine which of the GC/MS fractions you must test for. Mark "X" in column 2-a for all such GC/MS fractions that apply to your industry and for ALL toxic metals, cyanides, and total phenols. If you are not required to mark column 2-a *(secondary industries, nonprocess wastewater outfalls, and nonrequired GC/MS fractions)*, mark "X" in column 2-b for each pollutant you know or have reason to believe is present. Mark "X" in column 2-c for each pollutant you believe is absent. If you mark column 2a for any pollutant, you must provide the results of at least one analysis for that pollutant. If you mark column 2b for any pollutant, you must provide the results of at least one analysis for that pollutant if you know or have reason to believe it will be discharged in concentrations of 10 ppb or greater. If you mark column 2b for acrolein, acrylonitrile, 2,4 dinitrophenol, or 2-methyl-4, 6 dinitrophenol, you must provide the results of at least one analysis for each of these pollutants which you know or have reason to believe that you discharge in concentrations of 100 ppb or greater. Otherwise, for pollutants for which you mark column 2b, you must either submit at least one analysis or briefly describe the reasons the pollutant is expected to be discharged. Note that there are 7 pages to this part; please review each carefully. Complete one table *(all 7 pages)* for each outfall. See instructions for additional details and requirements.

1. POLLUTANT AND CAS NUMBER (if available)	2. MARK 'X'			3. EFFLUENT							4. UNITS		5. INTAKE (optional)		
	a. TESTING REQUIRED	b. BELIEVED PRESENT	c. BELIEVED ABSENT	a. MAXIMUM DAILY VALUE (1) CONCENTRATION	a. MAXIMUM DAILY VALUE (2) MASS	b. MAXIMUM 30 DAY VALUE (if available) (1) CONCENTRATION	b. MAXIMUM 30 DAY VALUE (if available) (2) MASS	c. LONG TERM AVRG. VALUE (if available) (1) CONCENTRATION	c. LONG TERM AVRG. VALUE (if available) (2) MASS	d. NO. OF ANALYSES	a. CONCENTRATION	b. MASS	a. LONG TERM AVERAGE VALUE (1) CONCENTRATION	a. LONG TERM AVERAGE VALUE (2) MASS	b. NO. OF ANALYSES
METALS, CYANIDE, AND TOTAL PHENOLS															
M. Antimony, Total (7440-36-0)			X												
2M. Arsenic, Total (7440-38-2)			X												
3M. Beryllium, Total, 7440-41-7)			X												
4M. Cadmium, Total (7440-43-9)			X												
5M. Chromium, Total (7440-47-3)			X												
6M. Copper, Total (7440-50-8)			X												
7M. Lead, Total (7439-92-1)			X												
8M. Mercury, Total (7439-97-6)			X												
9M. Nickel, Total (7440-02-0)			X												
10M. Selenium, Total (7782-49-2)			X												
11M. Silver, Total (7440-22-4)			X												
12M. Thallium, Total (7440-28-0)			X												
13M. Zinc, Total (7440-66-6)			X												
14M. Cyanide, Total (57-12-5)			X												
15M. Phenols, Total			X												
DIOXIN															
2,3,7,8-Tetrachlorodibenzo-P-Dioxin (1764-01-6)			X	DESCRIBE RESULTS											

 CONTINUE ON REVERSE

1. POLLUTANT AND CAS NUMBER (if available)	2. MARK 'X' a. TESTING REQUIRED	b. BELIEVED PRESENT	c. BELIEVED ABSENT	3. EFFLUENT a. MAXIMUM DAILY VALUE (1) CONCENTRATION	(2) MASS	b. MAXIMUM 30 DAY VALUE (if available) (1) CONCENTRATION	(2) MASS	c. LONG TERM AVRG. VALUE (if available) (1) CONCENTRATION	(2) MASS	d. NO. OF ANALYSES	4. UNITS a. CONCENTRATION	b. MASS	5. INTAKE (optional) a. LONG TERM AVERAGE VALUE (1) CONCENTRATION	(2) MASS	b. NO. OF ANALYSES
GC/MS FRACTION – VOLATILE COMPOUNDS															
1V. Acrolein (107-02-8)			X												
2V. Acrylonitrile (107-13-1)			X												
3V. Benzene (71-43-2)			X												
4V. Bis (Chloromethyl) Ether (542-88-1)			X												
5V. Bromoform (75-25-2)			X												
6V. Carbon Tetrachloride (56-23-5)			X												
7V. Chlorobenzene (108-90-7)			X												
8V. Chlorodibromomethane (124-48-1)			X												
9V. Chloroethane (75-00-3)			X												
10V. 2-Chloroethylvinyl Ether (110-75-8)			X												
11V. Chloroform (67-66-3)			X												
12V. Dichlorobromomethane (75-27-4)			X												
13V. Dichlorodifluoromethane (75-71-8)			X												
14V. 1,1-Dichloroethane (75-34-3)			X												
15V. 1,2-Dichloroethane (107-06-2)			X												
16V. 1,1-Dichloroethylene (75-35-4)			X												
17V. 1,2-Dichloropropane (78-87-5)			X												
18V. 1,3-Dichloropropylene (542-75-6)			X												
19V. Ethylbenzene (100-41-4)			X												
20V. Methyl Bromide (74-83-9)			X												
21V. Methyl Chloride (74-87-3)			X												

CONTINUE ON PAGE V-

1. POLLUTANT AND CAS NUMBER (if available)	2. MARK 'X' a. TESTING REQUIRED	b. BELIEVED PRESENT	c. BELIEVED ABSENT	3. EFFLUENT a. MAXIMUM DAILY VALUE (1) CONCENTRATION	(2) MASS	b. MAXIMUM 30 DAY VALUE (if available) (1) CONCENTRATION	(2) MASS	c. LONG TERM AVRG. VALUE (if available) (1) CONCENTRATION	(2) MASS	d. NO. OF ANALYSES	4. UNITS a. CONCENTRATION	b. MASS	5. INTAKE (optional) a. LONG TERM AVERAGE VALUE (1) CONCENTRATION	(2) MASS	b. NO. OF ANALYSES
GC/MS FRACTION – VOLATILE COMPOUNDS (continued)															
2V. Methylene Chloride (75-09-2)			X												
3V. 1,1,2,2-Tetrachloroethane (79-34-5)			X												
4V. Tetrachloroethylene (127-18-4)			X												
5V. Toluene (108-88-3)			X												
6V. 1,2-Trans-Dichloroethylene (156-60-5)			X												
7V. 1,1,1-Trichloroethane (71-55-6)			X												
8V. 1,1,2-Trichloroethane (79-00-5)			X												
9V. Trichloroethylene (79-01-6)			X												
10V. Trichlorofluoromethane (75-69-4)			X												
11V. Vinyl Chloride (75-01-4)			X												
GC/MS FRACTION – ACID COMPOUNDS															
1A. 2-Chlorophenol (95-57-8)			X												
2A. 2,4-Dichlorophenol (120-83-2)			X												
3A. 2,4-Dimethylphenol (105-67-9)			X												
4A. 4,6-Dinitro-O-Cresol (534-52-1)			X												
5A. 2,4-Dinitrophenol (51-28-5)			X												
6A. 2-Nitrophenol (88-75-5)			X												
7A. 4-Nitrophenol (100-02-7)			X												
8A. P-Chloro M-Cresol (59-50-7)			X												
9A. Pentachlorophenol (87-86-5)			X												
10A. Phenol (108-95-2)			X												
11A. 2,4,6-Trichlorophenol (88-06-2)			X												

POLLUTANT AND CAS NUMBER (if available)	2. MARK 'X' a. TESTING REQUIRED	b. BELIEVED PRESENT	c. BELIEVED ABSENT	3. EFFLUENT a. MAXIMUM DAILY VALUE (1) CONCENTRATION	(2) MASS	b. MAXIMUM 30 DAY VALUE (if available) (1) CONCENTRATION	(2) MASS	c. LONG TERM AVRG. VALUE (if available) (1) CONCENTRATION	(2) MASS	d. NO. OF ANALYSES	4. UNITS a. CONCENTRATION	b. MASS	5. INTAKE (optional) a. LONG TERM AVERAGE VALUE (1) CONCENTRATION	(2) MASS	b. NO. OF ANALYSES
C/MS FRACTION – BASE/NEUTRAL COMPOUNDS															
3. Acenaphthene 3-32-9)			X												
3. Acenaphtylene 08-96-8)			X												
3. Anthracene 20-12-7)			X												
3. Benzidine 12-87-5)			X												
B. Benzo (a) nthracene 56-55-3)			X												
B. Benzo (a) yrene (50-32-8)			X												
B. 3,4-Benzo- uoranthene 205-99-2)			X												
B. Benzo (ghi) erylene 191-24-2)			X												
B. Benzo (k) luoranthene 207-08-9)			X												
0B. Bis (2-Chloro- thoxy) Methane 111-91-1)			X												
1B. Bis (2-Chloro- thyl) Ether 111-44-4)			X												
2B. Bis (2-Chloroiso- opyl) Ether (102-60-1)			X												
3B. Bis (2-Ethyl- exyl) Phthalate 117-81-7)			X												
4B. 4-Bromo- henyl Phenyl Ether (101-55-3)			X												
5B. Butyl Benzyl hthalate (85-68-7)			X												
6B. 2-Chloro- aphthalene 91-58-7)			X												
7B. 4-Chloro- henyl Phenyl Ether (7005-72-3)			X												
8B. Chrysene 218-01-9)			X												
9B. Dibenzo (a,h) Anthracene 53-70-3)			X												
20B. 1,2-Dichloro- benzene (95-50-1)			X												
21B. 1,3-Dichloro- benzene (541-73-1)			X												

CONTINUE ON PAGE V-7

1. POLLUTANT AND CAS NUMBER (if available)	2. MARK "X"			3. EFFLUENT							4. UNITS		5. INTAKE (optional)		
	a. TESTING REQUIRED	b. BELIEVED PRESENT	c. BELIEVED ABSENT	a. MAXIMUM DAILY VALUE		b. MAXIMUM 30 DAY VALUE (if available)		c. LONG TERM AVRG. VALUE (if available)		d. NO. OF ANALYSES	a. CONCENTRATION	b. MASS	a. LONG TERM AVERAGE VALUE		b. NO. OF ANALYSES
				(1) CONCENTRATION	(2) MASS	(1) CONCENTRATION	(2) MASS	(1) CONCENTRATION	(2) MASS				(1) CONCENTRATION	(2) MASS	
C/MS FRACTION – BASE/NEUTRAL COMPOUNDS (continued)															
2B. 1,4-Dichloro-enzene (106-46-7)			X												
3B. 3,3'-Dichloro-enzidine (91-94-1)			X												
4B. Diethyl thalate (84-66-2)			X												
5B. Dimethyl thalate (131-11-3)			X												
6B. Di-N-Butyl thalate (84-74-2)			X												
7B. 2,4-Dinitro-luene (121-14-2)			X												
8B. 2,6-Dinitro-luene (606-20-2)			X												
9B. Di-N-Octyl thalate (117-84-0)			X												
0B. 1,2-Diphenyl-drazine (as Azo-enzene) (122-66-7)			X												
1B. Fluoranthene (206-44-0)			X												
2B. Fluorene (86-73-7)			X												
3B. Hexachlorobenzene (118-74-1)			X												
4B. Hexa-chlorobutadiene (87-68-3)			X												
5B. Hexachloro-cyclopentadiene (77-47-4)			X												
6B. Hexachloro-ane (67-72-1)			X												
7B. Indeno (1,2,3-cd) Pyrene (193-39-5)			X												
8B. Isophorone (78-59-1)			X												
9B. Naphthalene (91-20-3)			X												
0B. Nitrobenzene (98-95-3)			X												
1B. N-Nitro-dimethylamine (62-75-9)			X												
2B. N-Nitrosodi-Propylamine (621-64-7)			X												

CONTINUE ON REVERSE

·NTINUED FROM THE FRONT

POLLUTANT AND CAS NUMBER (if available)	2. MARK "X" a. TESTING REQUIRED	b. BELIEVED PRESENT	c. BELIEVED ABSENT	3. EFFLUENT a. MAXIMUM DAILY VALUE (1) CONCENTRATION	(2) MASS	b. MAXIMUM 30 DAY VALUE (if available) (1) CONCENTRATION	(2) MASS	c. LONG TERM AVRG. VALUE (if available) (1) CONCENTRATION	(2) MASS	d. NO. OF ANALYSES	4. UNITS a. CONCENTRATION	b. MASS	5. INTAKE (optional) a. LONG TERM AVERAGE VALUE (1) CONCENTRATION	(2) MASS	b. NO. OF ANALYSES
C/MS FRACTION – BASE/NEUTRAL COMPOUNDS (continued)															
B. N-Nitro-diphenylamine (6-30-6)			X												
B. Phenanthrene (5-01-8)			X												
B. Pyrene (29-00-0)			X												
B. 1,2,4-Trichlorobenzene (20-82-1)			X												
C/MS FRACTION – PESTICIDES															
. Aldrin (09-00-2)			X												
. α-BHC (19-84-6)			X												
. β-BHC (19-85-7)			X												
. γ-BHC (8-89-9)			X												
. δ-BHC (19-86-8)			X												
. Chlordane (7-74-9)			X												
. 4,4'-DDT (0-29-3)			X												
. 4,4'-DDE (2-55-9)			X												
. 4,4'-DDD (2-54-8)			X												
P. Dieldrin (0-57-1)			X												
P. α-Endosulfan (15-29-7)			X												
P. β-Endosulfan (15-29-7)			X												
P. Endosulfan ulfate (031-07-8)			X												
P. Endrin (2-20-8)			X												
P. Endrin ldehyde (421-93-4)			X												
P. Heptachlor (6-44-8)			X												

CONTINUE ON PAGE V-9

AND CAS NUMBER (If available)	2. MARK "X" a. TESTING REQUIRED	b. BELIEVED PRESENT	c. BELIEVED ABSENT	3. EFFLUENT a. MAXIMUM DAILY VALUE (1) CONCENTRATION	(2) MASS	b. MAXIMUM 30 DAY VALUE (If available) (1) CONCENTRATION	(2) MASS	c. LONG TERM AVRG. VALUE (If available) (1) CONCENTRATION	(2) MASS	d. NO. OF ANALYSES	4. UNITS a. CONCENTRATION	b. MASS	5. INTAKE (optional) a. LONG TERM AVERAGE VALUE (1) CONCENTRATION	(2) MASS	b. NO. OF ANALYSES
GC/MS FRACTION – PESTICIDES *(continued)*															
17P. Heptachlor Epoxide (1024-57-3)			X												
18P. PCB-1242 (53469-21-9)			X												
19P. PCB-1254 (11097-69-1)			X												
20P. PCB-1221 (11104-28-2)			X												
21P. PCB-1232 (11141-16-5)			X												
22P. PCB-1248 (12672-29-6)			X												
23P. PCB-1260 (11096-82-5)			X												
24P. PCB-1016 (12674-11-2)			X												
25P. Toxaphene (8001-35-2)			X												

* U.S. G.P.O.:1992-312-020:63176

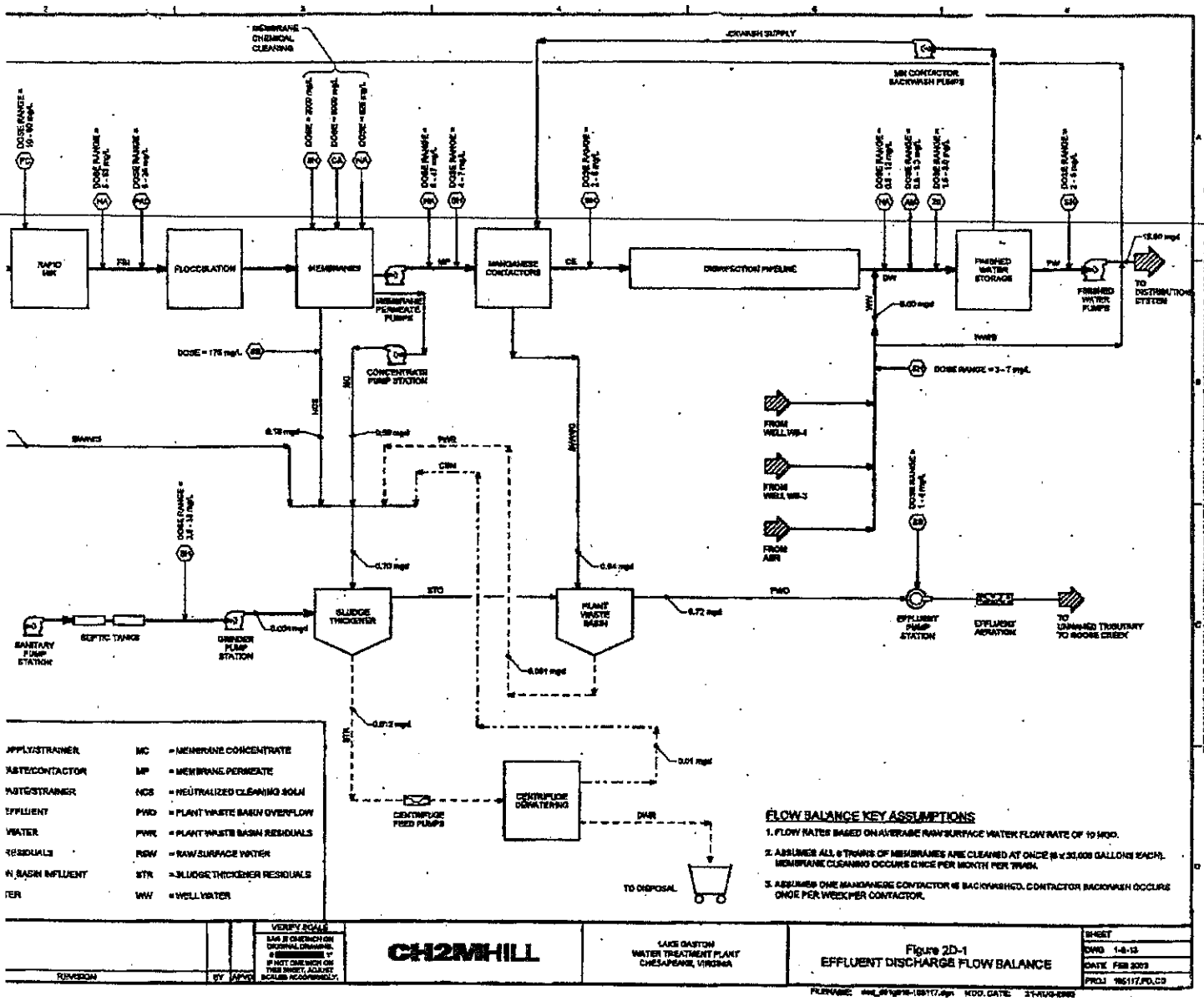

JUN 2008
RECEIVED
DEQ TIDEWATER
REGIONAL OFFICE

VPDES Permit Application Addendum

1. **Entity to whom the permit is to be issued:** LAKE GASTON WATER TREATMENT PLANT

Who will be legally responsible for the wastewater treatment facilities and compliance with the permit? This ~~may or may not be the facility or property owner.~~ A. CRAIG MARKES, WATER RESOURCES MANAGEMENT ADMINISTRATOR

2. **Is this facility located within city or town boundaries?** (Y) / N

3. **Provide the tax map parcel number for the land where the discharge is located.** 0210000000350

4. **For the facility to be covered by this permit, how many acres will be disturbed during the next five years due to new construction activities?** A PLANT EXPANSION IS SLATED FOR YEAR 2011. THERE ARE NO PLANS TO DISTURB ACREAGE AS IT WILL ONLY EXPAND WITHIN CURRENT FOOTPRINT.

5. **What is the design average effluent flow of this facility?** 0.4 **MGD**

For industrial facilities, provide the max. 30-day average production level, include units: N/A

In addition to the design flow or production level, should the permit be written with limits for any other discharge flow tiers or production levels? (Y) / N

If "YES", please identify the other flow tiers (in MGD) or production levels: PRODUCTION LEVELS AFTER 2011 EXPANSION CURRENTLY UNKNOWN.

Please consider the following questions for both the flow tiers and the production levels (if applicable): Do you plan to expand operations during the next five years? Is you facility's design flow considerably greater than your current flow?

6. **Nature of operations generating wastewater:** UF MEMBRANE CONCENTRATE, MANGANESE CONTACTOR BACKWASH WATER, MEMBRANE CLEANING SOLUTION, PLANT SANITARY EFFLUENT STRAINER BACKWASH WASTE, SUMP PUMP DISCHARGE.

0 % of flow from domestic connections/sources

Number of private residences to be served by the treatment works: _____

100 % of flow from non-domestic connections/sources

7. **Mode of Discharge:** X Continuous _____ Intermittent _____ Seasonal

Describe frequency and duration of intermittent or seasonal discharges:

_____

JUN 2008 RECEIVED DEQ TIDEWATER REGIONAL OFFICE

8. **Identify the characteristics of the receiving stream at the point just above the facility's discharge point:**

X Permanent stream, never dry
_____ Intermittent stream, usually flowing, sometimes dry
_____ Ephemeral stream, wet-weather flow, often dry
_____ Effluent-dependent stream, usually or always dry without effluent flow
_____ Lake or pond at or below the discharge point
_____ Other _____

9. **Approval Date(s):**

O & M Manual 07.13.07 Sludge/Solids Management Plan 05.03.04

Have there been any changes in your operations or procedures since the above approval dates? Y / (N)

original PPI 1111

Chesapeake VIRGINIA

Department of Public Utilities
Northwest River Water Treatment Plant
3550 S. Battlefield Boulevard
Chesapeake, VA 23322
Tel: (757) 382-3550
Fax: (757) 421-4483

November 27, 2007

Mr. Robert Smithson
Department of Environmental Quality
5636 Southern Blvd.
Virginia Beach, VA 23462

OCT 2008
RECEIVED
DEQ TIDEWATER
REGIONAL OFFICE

RE: VPDES Permit No. VA0091405
Lake Gaston Water Treatment Plant, Chesapeake, VA

Dear Mr. Smithson:

Enclosed, please find copies of two water quality results for the Lake Gaston Water Treatment Plant Effluent Discharge Outfall 001. Samples were collected on August 4, 2008 and September 2008 for dissolved copper and silver analyses. They were sent to Hampton Roads Sanitation District Central Lab for clean metals analysis.

Another form attached is a clarification for the ammonia result. The report sent in 2007 listed the unit in parts per billion and the number became ambiguous. Same result is listed on this form but unit is changed to parts per million.

If you need more information, please call me at 382-3550.

Sincerely,

Violee B. DeLuna
Water Quality Supervisor

cc: A. Craig Maples, Water Resource Administrator

DEPARTMENT OF ENVIRONMENTAL QUALITY
WATER QUALITY MONITORING
ATTACHMENT A

OCT 2008
RECEIVED
DEQ TIDEWATER
REGIONAL OFFICE

FACILITY NAME: Lake Gaston WTP

ADDRESS: 5416 Military Hwy West
Chesapeake, VA 23321

PERMIT NO.: VA0091405 OUTFALL NO.: _001_

DEQ PARAM #	EPA PARAM #	CHEMICAL	EPA ANALYSIS NO.	QUANTIFICATION LEVEL[1]	REPORTING RESULTS	SAMPLE TYPE[2]	SAMPLE FREQUENCY[3]	SPECIFIC TARGET VALUE[4]
		METALS						
		REPORTING PERIOD: FROM: 01/01/08 TO: 09/30/08 REPRESENTING: 1st, 2nd, 3rd, 4th, 5th, 6th, 7th, 8th, 9th, 10th 11th, 12th, 13th, 14th, 15th, 16th, 17th, 18th, 19th, 20th QUARTERLY PERIOD (circle one) 1st, 2nd, 3rd, 4th, 5th, 6th, 7th, 8th, 9th, 10th SEMIANNUAL PERIOD (circle one) 1st, 2nd, 3rd, 4th, 5th ANNUAL PERIOD (circle one) ONCE PER PERMIT TERM						
		Antimony (Dissolved)	(5)	(5)		G	B	
438	01000	Arsenic (Dissolved)	(5)	(5)		G	(PWS)	
		Arsenic III (Dissolved)	(5)	(5)		G	B	
439	01005	Barium (Dissolved)	(5)	(5)		G	(PWS)	
440	01025	Cadmium (Dissolved)	(5)	(5)		G	B	
232	01033	Chromium III* (Dissolved)	(5)	(5)		G	(FW)	
023	01032	Chromium VI (Dissolved)	(5)	(5)		G	B	
442	01040	Copper (Dissolved)	(5)	(5)	3.0	G	B	
308	01046	Iron (Dissolved)	(5)	(5)		G	(PWS)	
405	01049	Lead (Dissolved)	(5)	(5)		G	B	
443	01056	Manganese (Dissolved)	(5)	(5)		G	(PWS)	
444	71890	Mercury (Dissolved)	(5)	(5)		G	B	
445	01065	Nickel (Dissolved)	(5)	(5)		G	B	
446	01145	Selenium (Dissolved)	(5)	(5)		G	B	
447	01075	Silver (Dissolved)	(5)	(5)	<0.05	G	B	
448	01092	Zinc (Dissolved)	(5)	(5)		G	B	

Note: Sample was collected on 08/04/08.

DEPARTMENT OF ENVIRONMENTAL QUALITY
WATER QUALITY MONITORING
ATTACHMENT A

OCT 2008
RECEIVED
DEQ TIDEWATER
REGIONAL OFFICE

FACILITY NAME: Lake Gaston WTP

ADDRESS: 5416 Military Hwy West
Chesapeake, VA 23321

PERMIT NO.: VA0091405 OUTFALL NO.: 001

DEQ PARAM #	EPA PARAM #	CHEMICAL	EPA ANALYSIS NO.	QUANTIFICATION LEVEL[1]	REPORTING RESULTS	SAMPLE TYPE[2]	SAMPLE FREQUENCY[3]	SPECIFIC TARGET VALUE[4]
		METALS						
		REPORTING PERIOD: FROM: 2/01/08 TO: 8/31/08 REPRESENTING: 1st, 2nd, 3rd, 4th, 5th, 6th, 7th, 8th, 9th, 10th 11th, 12th, 13th, 14th, 15th, 16th, 17th, 18th, 19th, 20th QUARTERLY PERIOD (circle one) 1st, 2nd, 3rd, 4th, 5th, 6th, 7th, 8th, 9th, 10th SEMIANNUAL PERIOD (circle one) 1st, 2nd, 3rd, 4th, 5th ANNUAL PERIOD (circle one) ONCE PER PERMIT TERM						
		Antimony (Dissolved)	(5)	(5)		G	B	
438	01000	Arsenic (Dissolved)	(5)	(5)		G	(PWS)	
		Arsenic III (Dissolved)	(5)	(5)		G	B	
439	01005	Barium (Dissolved)	(5)	(5)		G	(PWS)	
440	01025	Cadmium (Dissolved)	(5)	(5)		G	B	
232	01033	Chromium III* (Dissolved)	(5)	(5)		G	(FW)	
023	01032	Chromium VI (Dissolved)	(5)	(5)		G	B	
442	01040	Copper (Dissolved)	(5)	(5)	<0.5	G	B	
308	01046	Iron (Dissolved)	(5)	(5)		G	(PWS)	
405	01049	Lead (Dissolved)	(5)	(5)		G	B	
443	01056	Manganese (Dissolved)	(5)	(5)		G	(PWS)	
444	71890	Mercury (Dissolved)	(5)	(5)		G	B	
445	01065	Nickel (Dissolved)	(5)	(5)		G	B	
446	01145	Selenium (Dissolved)	(5)	(5)		G	B	
447	01075	Silver (Dissolved)	(5)	(5)	<0.05	G	B	
448	01092	Zinc (Dissolved)	(5)	(5)		G	B	

Note: SAMPLE WAS COLLECTED ON 09/11/08.

DEPARTMENT OF ENVIRONMENTAL QUALITY
WATER QUALITY MONITORING
ATTACHMENT A

OCT 2008 RECEIVED DEQ TIDEWATER REGIONAL OFFICE

FACILITY NAME: Lake Gaston Water Treatment Plant

ADDRESS: 5416 Military Hwy West
Chespeake, VA 23321

PERMIT NO.: VA0091405 OUTFALL NO.: 001

DEQ PARAM #	EPA PARAM #	CHEMICAL	EPA ANALYSIS NO.	QUANTIFICATION LEVEL[1]	REPORTING RESULTS	SAMPLE TYPE[2]	SAMPLE FREQUENCY[3]	SPECIFIC TARGET VALUE[4]
210	39032	Pentachlorophenol	625	50.0		G or C		NA
175	46000	Phenol[8]	625	10.0		G or C		NA
602	34621	2,4,6-Trichlorophenol	625	10.0		G or C		NA

MISCELLANEOUS

REPORTING PERIOD: FROM: 01 01 08 TO: 09 30 08

REPRESENTING: 1st, 2nd, 3rd, 4th, 5th, 6th, 7th, 8th, 9th, 10th SEMIANNUAL PERIOD (circle one)

1st, 2nd, 3rd, 4th, 5th ANNUAL PERIOD (circle one)

ONCE PER PERMIT TERM

039	00610	Ammonia as NH3-N	350.1	200		C	C	NA
		Chlorides (mg/l)	(6)	(7)		C	(FW & PWS)	NA
005	50060	Chlorine, Total Residual	(6)	100		G	C	NA
018	00720	Cyanide	335.2	10.0		G	C	NA
306	03556	Dioxin	1613	0.00001		C	C	NA
		Fecal Coliform N/CML)	(6)	(7)		G	C	NA
		Foaming Agents (as MBAS)	(6)	(7)		G	(PWS)	NA
137	00900	Hardness (as mg/l $CaCO_3$)	(6)	(7)		C	C	NA
		Hydrogen Sulfide	(6)	(7)		G	C	NA
		Nitrate (as mg/l N)	(6)	(7)		C	C	NA
009	00945	Sulfate (mg/l)	(6)	(7)		C	(PWS)	NA
		Total Dissolved Solids (mg/l)	(6)	(7)		C	(PWS)	NA
350	30340	Tributyltin	(9)	(9)		C	C	
252	81551	Xylenes (total)	SW 846 Method 8021B	(7)		G	C	NA

Craig McColes — Water Resources Dev. Admin.
Name of Principal Exec. Officer or Authorized Agent / Title

DEPARTMENT OF ENVIRONMENTAL QUALITY
WATER QUALITY MONITORING
ATTACHMENT A

OCT 2008
RECEIVED
DEQ TIDEWATER
REGIONAL OFFICE

FACILITY NAME: Lake Gaston Water Treatment Plant

ADDRESS: 5416 Military Hwy West
Chesapeake, VA 23321

PERMIT NO.: VA0091405 OUTFALL NO.: 001

DEQ PARAM #	EPA PARAM #	CHEMICAL	EPA ANALYSIS NO.	QUANTIFICATION LEVEL[1]	REPORTING RESULTS	SAMPLE TYPE[2]	SAMPLE FREQUENCY[3]	SPECIFIC TARGET VALUE[4]
210	39032	Pentachlorophenol	625	50.0		G or C		NA
175	46000	Phenol[8]	625	10.0		G or C		NA
602	34621	2,4,6-Trichlorophenol	625	10.0		G or C		NA

MISCELLANEOUS

REPORTING PERIOD: FROM: 01/01/07 TO: 12/31/07

REPRESENTING: 1st, 2nd, 3rd, 4th, 5th, 6th, 7th, 8th, 9th, 10th SEMIANNUAL PERIOD (circle one)

1st, 2nd, 3rd, 4th, 5th ANNUAL PERIOD (circle one)

ONCE PER PERMIT TERM

039	00610	Ammonia as NH3-N	350.1	200	0.390 mg/L	C	C	NA
		Chlorides (mg/l)	(6)	(7)		C	(FW & PWS)	NA
005	50060	Chlorine, Total Residual	(6)	100		G	C	NA
018	00720	Cyanide	335.2	10.0		G	C	NA
306	03556	Dioxin	1613	0.00001		C	C	NA
		Fecal Coliform N/CML)	(6)	(7)		G	C	NA
		Foaming Agents (as MBAS)	(6)	(7)		G	(PWS)	NA
137	00900	Hardness (as mg/l $CaCO_3$)	(6)	(7)		C	C	NA
		Hydrogen Sulfide	(6)	(7)		G	C	NA
		Nitrate (as mg/l N)	(6)	(7)		C	C	NA
009	00945	Sulfate (mg/l)	(6)	(7)		C	(PWS)	NA
		Total Dissolved Solids (mg/l)	(6)	(7)		C	(PWS)	NA
350	30340	Tributyltin	(9)	(9)		C	C	
252	81551	Xylenes (total)	SW 846 Method 8021B	(7)		G	C	NA

Craig Mathes — Water Resources Admin.
Name of Principal Exec. Officer or Authorized Agent / Title

Sample date 6/6/07

DEPARTMENT OF ENVIRONMENTAL QUALITY
WATER QUALITY MONITORING
ATTACHMENT A

JUN 2008 RECEIVED DEQ TIDEWATER REGIONAL OFFICE

FACILITY NAME: Lake Gaston WTP

ADDRESS: 5416 Military Hwy West
Chesapeake, VA 23321

PERMIT NO.: VA0091405 OUTFALL NO.: 001

DEQ PARAM #	EPA PARAM #	CHEMICAL	EPA ANALYSIS NO.	QUANTIFICATION LEVEL[1]	REPORTING RESULTS	SAMPLE TYPE[2]	SAMPLE FREQUENCY[3]	SPECIFIC TARGET VALUE[4]
		METALS						
		REPORTING PERIOD: FROM: / / TO: / /						
		REPRESENTING: 1st, 2nd, 3rd, 4th, 5th, 6th, 7th, 8th, 9th, 10th 11th, 12th, 13th, 14th, 15th, 16th, 17th, 18th, 19th, 20th QUARTERLY PERIOD (circle one)						
		1st, 2nd, 3rd, 4th, 5th, 6th, 7th, 8th, 9th, 10th SEMIANNUAL PERIOD (circle one)						
		(1st) 2nd, 3rd, 4th, 5th ANNUAL PERIOD (circle one)						
		ONCE PER PERMIT TERM						
		Antimony (Dissolved)	(5)	(5)	<0.10	G	B	
438	01000	Arsenic (Dissolved)	(5)	(5)	0.3	G	(PWS)	
		Arsenic III (Dissolved)	(5)	(5)	0.3	G	B	
439	01005	Barium (Dissolved)	(5)	(5)	37	G	(PWS)	
440	01025	Cadmium (Dissolved)	(5)	(5)	<0.05	G	B	
232	01033	Chromium III* (Dissolved)	(5)	(5)	<2	G	(FW)	
023	01032	Chromium VI (Dissolved)	(5)	(5)	<2	G	B	
442	01040	Copper (Dissolved)	(5)	(5)	2.9	G	B	
308	01046	Iron (Dissolved)	(5)	(5)	0.07	G	(PWS)	
405	01049	Lead (Dissolved)	(5)	(5)	<0.1	G	B	
443	01056	Manganese (Dissolved)	(5)	(5)	2.47	G	(PWS)	
444	71890	Mercury (Dissolved)	(5)	(5)	<0.1	G	B	
445	01065	Nickel (Dissolved)	(5)	(5)	<10	G	B	
446	01145	Selenium (Dissolved)	(5)	(5)	0.1	G	B	
447	01075	Silver (Dissolved)	(5)	(5)	<5	G	B	
448	01092	Zinc (Dissolved)	(5)	(5)	<15	G	B	

DEPARTMENT OF ENVIRONMENTAL QUALITY
WATER QUALITY MONITORING
ATTACHMENT A

FACILITY NAME: Lake Gaston Water Treatment Plant

ADDRESS: 5416 Military Hwy West
Chespeake, VA 23321

PERMIT NO.: VA0091405 OUTFALL NO.:_001_

DEQ PARAM #	EPA PARAM #	CHEMICAL	EPA ANALYSIS NO.	QUANTIFI-CATION LEVEL[1]	REPORTING RESULTS	SAMPLE TYPE[2]	SAMPLE FREQUENCY[3]	SPECIFIC TARGET VALUE[4]
		PESTICIDES/PCB'S						
		REPORTING PERIOD: FROM: / / TO: / /						
		REPRESENTING: 1st, 2nd, 3rd, 4th, 5th, 6th, 7th, 8th, 9th, 10th SEMIANNUAL PERIOD (circle one)						
		1st, 2nd, 3rd, 4th, 5th ANNUAL PERIOD (circle one)						
		ONCE PER PERMIT TERM						
332	39330	Aldrin	608	0.05		G or C		NA
333	39350	Chlordane	608	0.2		G or C		NA
334	77969	Chlorpyrifos (Dursban)	622	(7)		G or C		NA
		DDD	608	0.1		G or C		NA
		DDE	608	0.1		G or C		NA
335	39370	DDT	608	0.1		G or C		NA
336	39560	Demeton	(6)	(7)		G or C		NA
523	39730	2,4-dichlorophenoxy acetic acid (2,4-D)	(6)	(7)		G or C	(PWS)	NA
337	39380	Dieldrin	608	0.1		G or C		NA
		Endosulfan	608	0.1		G or C		NA
339	39390	Endrin	608	0.1		G or C		NA
340	39580	Guthion	622	(7)		G or C		NA
341	39410	Heptachlor	608	0.05		G or C		NA
342	77835	Hexachlorocyclohexane (Lindane)	608	0.05		G or C		NA
		Kepone	(6)	(7)		G or C		NA
343	39530	Malathion	(6)	(7)		G or C		NA
344	39480	Methoxychlor	(6)	(7)		G or C		NA
345	39755	Mirex	(6)	(7)		G or C		NA
346	39540	Parathion	(6)	(7)		G or C	(FW)	NA
641		PCB-1242	608	1.0		G or C		NA
642		PCB-1254	608	1.0		G or C		NA
643		PCB-1221	608	1.0		G or C		NA
644		PCB-1232	608	1.0		G or C		NA
645		PCB-1248	608	1.0		G or C		NA

DEPARTMENT OF ENVIRONMENTAL QUALITY
WATER QUALITY MONITORING
ATTACHMENT A

FACILITY NAME: Lake Gaston Water Treatment Plant

ADDRESS: 5416 Military Hwy West
Chespeake, VA 23321

PERMIT NO.: VA0091405 OUTFALL NO.: 001

DEQ PARAM #	EPA PARAM #	CHEMICAL	EPA ANALYSIS NO.	QUANTIFICATION LEVEL[1]	REPORTING RESULTS	SAMPLE TYPE[2]	SAMPLE FREQUENCY[3]	SPECIFIC TARGET VALUE[4]
296	34469	Pyrene	625	10.0		G or C		NA
		1,2,4 Trichlorobenzene	625	10.0		G or C		NA

VOLATILES

REPORTING PERIOD: FROM: / / TO: / /

REPRESENTING: 1st, 2nd, 3rd, 4th, 5th, 6th, 7th, 8th, 9th, 10th SEMIANNUAL PERIOD (circle one)

1st, 2nd, 3rd, 4th, 5th ANNUAL PERIOD (circle one)

ONCE PER PERMIT TERM

216	34030	Benzene	624	10.0		G		NA
484	32104	Bromoform	624	10.0		G		NA
236	32102	Carbon Tetrachloride	624	10.0		G		NA
652		Chlorodibromomethane	624	10.0		G		NA
223	32106	Chloroform	624	10.0		G		NA
649		Dichloromethane	624	20.0		G		NA
244	79603	Dichlorobromomethane	624	10.0		G		NA
260	34531	1,2-Dichloroethane	624	10.0		G		NA
		1,1-Dichloroethylene	624	10.0		G		NA
172	34371	Ethylbenzene	624	10.0		G		NA
653		Monochlorobenzene	624	50.0		G		NA
220	34475	Tetrachloroethylene	624	10.0		G		NA
222	34010	Toluene	624	10.0		G		NA
155	39180	Trichloroethylene	624	10.0		G		NA
173	39175	Vinyl Chloride	624	10.0		G		NA

ACIDS EXTRACTABLES

REPORTING PERIOD: FROM: / / TO: / /

REPRESENTING: 1st, 2nd, 3rd, 4th, 5th, 6th, 7th, 8th, 9th, 10th SEMIANNUAL PERIOD (circle one)

1st, 2nd, 3rd, 4th, 5th ANNUAL PERIOD (circle one)

ONCE PER PERMIT TERM

		2-Chlorophenol	625	10.0		G or C		NA
		2,4 Dichlorophenol	625	10.0		G or C		NA
		2,4 Dimethylphenol	625	10.0		G or C		NA

DEPARTMENT OF ENVIRONMENTAL QUALITY
WATER QUALITY MONITORING
ATTACHMENT A

FACILITY NAME: Lake Gaston Water Treatment Plant

ADDRESS: 5416 Military Hwy West
Chespeake, VA 23321

PERMIT NO.: VA0091405 OUTFALL NO.:_001_

DEQ PARAM #	EPA PARAM #	CHEMICAL	EPA ANALYSIS NO.	QUANTIFI-CATION LEVEL[1]	REPORTING RESULTS	SAMPLE TYPE[2]	SAMPLE FREQUENCY[3]	SPECIFIC TARGET VALUE[4]
618	39508	PCB-1260	608	1.0		G or C		NA
646		PCB-1016	608	1.0		G or C		NA
349	39400	Toxaphene	608	5.0		G or C		NA
647		2-(2,4,5-Trichlorophenoxy) propionic acid (Silvex)	(6)	(7)		G or C	(PWS)	NA

BASE NEUTRAL EXTRACTABLES

REPORTING PERIOD: FROM: / / TO: / /

REPRESENTING: 1st, 2nd, 3rd, 4th, 5th, 6th, 7th, 8th, 9th, 10th SEMIANNUAL PERIOD (circle one)

1st, 2nd, 3rd, 4th, 5th ANNUAL PERIOD (circle one)

ONCE PER PERMIT TERM

		Acenaphthene	625	10.0		G or C		NA
275	34222	Anthracene	625	10.0		G or C		NA
276	34526	Benzo(a)anthracene	625	10.0		G or C		NA
648		Benzo(b)fluoranthene	625	10.0		G or C		NA
278	34242	Benzo(k)fluoranthene	625	10.0		G or C		NA
277	34247	Benzo(a)pyrene	625	10.0		G or C		NA
		Butyl benzyl phthalate	625	10.0		G or C		NA
282	34320	Chrysene	625	10.0		G or C		NA
654		Dibenz(a,h)anthracene	625	20.0		G or C		NA
		Dibutyl phthalate	625	10.0		G or C		NA
259	34536	1,2-Dichlorobenzene	625	10.0		G or C		NA
264	34566	1,3-Dichlorobenzene	625	10.0		G or C		NA
266	34571	1,4-Dichlorobenzene	625	10.0		G or C		NA
		Diethyl phthalate	625	10.0		G or C		NA
170		Di-2-Ethylhexyl Phthalate	625	10.0		G or C		NA
239	34611	2,4-Dinitrotoluene	625	10.0		G or C		NA
287	34376	Fluoranthene	625	10.0		G or C		NA
288	34381	Fluorene	625	10.0		G or C		NA
651		Indeno(1,2,3-cd)pyrene	625	20.0		G or C		NA
650		Isophorone	625	10.0		G or C		NA
293	34696	Naphthalene	625	10.0		G or C		NA
		Nitrobenzene	625	10.0		G or C		NA

Sample date 6/6/07

DEPARTMENT OF ENVIRONMENTAL QUALITY
WATER QUALITY MONITORING
ATTACHMENT A

FACILITY NAME: Lake Gaston Water Treatment Plant

ADDRESS: 5416 Military Hwy West
Chespeake, VA 23321

PERMIT NO.: VA0091405 OUTFALL NO.: 001

DEQ PARAM #	EPA PARAM #	CHEMICAL	EPA ANALYSIS NO.	QUANTIFICATION LEVEL[1]	REPORTING RESULTS	SAMPLE TYPE[2]	SAMPLE FREQUENCY[3]	SPECIFIC TARGET VALUE[4]
210	39032	Pentachlorophenol	625	50.0		G or C		NA
175	46000	Phenol[8]	625	10.0		G or C		NA
502	34621	2,4,6-Trichlorophenol	625	10.0		G or C		NA

MISCELLANEOUS

REPORTING PERIOD: FROM: / / TO: / /

REPRESENTING: 1st, 2nd, 3rd, 4th, 5th, 6th, 7th, 8th, 9th, 10th SEMIANNUAL PERIOD (circle one)

1st, 2nd, 3rd, 4th, 5th ANNUAL PERIOD (circle one)

ONCE PER PERMIT TERM

039	00610	Ammonia as NH3-N	350.1	200	.380 mg/L	C	C	NA
		Chlorides (mg/l)	(6)	(7)	27	C	(FW & PWS)	NA
005	50060	Chlorine, Total Residual	(6)	100		G	C	NA
018	00720	Cyanide	335.2	10.0	<10	G	C	NA
306	03556	Dioxin	1613	0.00001	ND	C	C	NA
		Fecal Coliform N/CML)	(6)	(7)	42	G	C	NA
		Foaming Agents (as MBAS)	(6)	(7)	<0.20	G	(PWS)	NA
137	00900	Hardness (as mg/l $CaCO_3$)	(6)	(7)	46	C	C	NA
		Hydrogen Sulfide	(6)	(7)	<0.3	G	C	NA
		Nitrate (as mg/l N)	(6)	(7)	<0.05	C	C	NA
009	00945	Sulfate (mg/l)	(6)	(7)	30	C	(PWS)	NA
		Total Dissolved Solids (mg/l)	(6)	(7)		C	(PWS)	NA
350	30340	Tributyltin	(9)	(9)	ND	C	C	
252	81551	Xylenes (total)	SW 846 Method 8021B	(7)	<2	G	C	NA

Name of Principal Exec. Officer or Authorized Agent / Title

Sample date 5/9/08

DEPARTMENT OF ENVIRONMENTAL QUALITY
WATER QUALITY MONITORING
ATTACHMENT A

FACILITY NAME: Lake Gaston WTP

ADDRESS: 5416 Military Hwy West
Chesapeake, VA 23321

PERMIT NO.: VA0091405 OUTFALL NO.: 001

DEQ PARAM #	EPA PARAM #	CHEMICAL	EPA ANALYSIS NO.	QUANTIFICATION LEVEL[1]	REPORTING RESULTS	SAMPLE TYPE[2]	SAMPLE FREQUENCY[3]	SPECIFIC TARGET VALUE[4]
		METALS						
		REPORTING PERIOD: FROM: 01/01/08 TO: 12/31/08 REPRESENTING: 1st, 2nd, 3rd, 4th, 5th, 6th, 7th, 8th, 9th, 10th 11th, 12th, 13th, 14th, 15th, 16th, 17th, 18th, 19th, 20th QUARTERLY PERIOD (circle one) 1st, 2nd, 3rd, 4th, 5th, 6th, 7th, 8th, 9th, 10th SEMIANNUAL PERIOD (circle one) 1st, 2nd, 3rd, 4th, 5th ANNUAL PERIOD (circle one) ONCE PER PERMIT TERM						
		Antimony (Dissolved)	(5)	(5)	0.44	G	B	
438	01000	Arsenic (Dissolved)	(5)	(5)	0.4	G	(PWS)	
		Arsenic III (Dissolved)	(5)	(5)	0.5	G	B	
439	01005	Barium (Dissolved)	(5)	(5)	12	G	(PWS)	
440	01025	Cadmium (Dissolved)	(5)	(5)	<0.05	G	B	
232	01033	Chromium III* (Dissolved)	(5)	(5)	2	G	(FW)	
023	01032	Chromium VI (Dissolved)	(5)	(5)	2	G	B	
442	01040	Copper (Dissolved)	(5)	(5)	9.1	G	B	
308	01046	Iron (Dissolved)	(5)	(5)	4300	G	(PWS)	
405	01049	Lead (Dissolved)	(5)	(5)	0.3	G	B	
443	01056	Manganese (Dissolved)	(5)	(5)	68	G	(PWS)	
444	71890	Mercury (Dissolved)	(5)	(5)	<0.1	G	B	
445	01065	Nickel (Dissolved)	(5)	(5)	<10	G	B	
446	01145	Selenium (Dissolved)	(5)	(5)	0.2	G	B	
447	01075	Silver (Dissolved)	(5)	(5)	<5	G	B	
448	01092	Zinc (Dissolved)	(5)	(5)	19	G	B	

DEPARTMENT OF ENVIRONMENTAL QUALITY
WATER QUALITY MONITORING
ATTACHMENT A

FACILITY NAME: Lake Gaston Water Treatment Plant

ADDRESS: 5416 Military Hwy West
Chespeake, VA 23321

PERMIT NO.: VA0091405 OUTFALL NO.:_001_

DEQ PARAM #	EPA PARAM #	CHEMICAL	EPA ANALYSIS NO.	QUANTIFI-CATION LEVEL[1]	REPORTING RESULTS	SAMPLE TYPE[2]	SAMPLE FREQUENCY[3]	SPECIFIC TARGET VALUE[4]
		PESTICIDES/PCB'S						
		REPORTING PERIOD: FROM: / / TO: / /						
		REPRESENTING: 1st, 2nd, 3rd, 4th, 5th, 6th, 7th, 8th, 9th, 10th SEMIANNUAL PERIOD (circle one)						
		1st, 2nd, 3rd, 4th, 5th ANNUAL PERIOD (circle one)						
		ONCE PER PERMIT TERM						
332	39330	Aldrin	608	0.05	N/A	G or C		NA
333	39350	Chlordane	608	0.2		G or C		NA
334	77969	Chlorpyrifos (Dursban)	622	(7)		G or C		NA
		DDD	608	0.1		G or C		NA
		DDE	608	0.1		G or C		NA
335	39370	DDT	608	0.1		G or C		NA
336	39560	Demeton	(6)	(7)		G or C		NA
523	39730	2,4-dichlorophenoxy acetic acid (2,4-D)	(6)	(7)		G or C	(PWS)	NA
337	39380	Dieldrin	608	0.1		G or C		NA
		Endosulfan	608	0.1		G or C		NA
339	39390	Endrin	608	0.1		G or C		NA
340	39580	Guthion	622	(7)		G or C		NA
341	39410	Heptachlor	608	0.05		G or C		NA
342	77835	Hexachlorocyclohexane (Lindane)	608	0.05		G or C		NA
		Kepone	(6)	(7)		G or C		NA
343	39530	Malathion	(6)	(7)		G or C		NA
344	39480	Methoxychlor	(6)	(7)		G or C		NA
345	39755	Mirex	(6)	(7)		G or C		NA
346	39540	Parathion	(6)	(7)		G or C	(PW)	NA
641		PCB-1242	608	1.0		G or C		NA
642		PCB-1254	608	1.0		G or C		NA
643		PCB-1221	608	1.0		G or C		NA
644		PCB-1232	608	1.0		G or C		NA
645		PCB-1248	608	1.0		G or C		NA

DEPARTMENT OF ENVIRONMENTAL QUALITY
WATER QUALITY MONITORING
ATTACHMENT A

FACILITY NAME: Lake Gaston Water Treatment Plant

ADDRESS: 5416 Military Hwy West
Chespeake, VA 23321

PERMIT NO.: VA0091405 OUTFALL NO.: 001

DEQ PARAM #	EPA PARAM #	CHEMICAL	EPA ANALYSIS NO.	QUANTIFICATION LEVEL[1]	REPORTING RESULTS	SAMPLE TYPE[2]	SAMPLE FREQUENCY[3]	SPECIFIC TARGET VALUE[4]
618	39508	PCB-1260	608	1.0	NA	G or C		NA
646		PCB-1016	608	1.0		G or C		NA
349	39400	Toxaphene	608	5.0		G or C		NA
647		2-(2,4,5-Trichlorophenoxy) propionic acid (Silvex)	(6)	(7)		G or C	(PWS)	NA

BASE NEUTRAL EXTRACTABLES

REPORTING PERIOD: FROM: / / TO: / /

REPRESENTING: 1st, 2nd, 3rd, 4th, 5th, 6th, 7th, 8th, 9th, 10th SEMIANNUAL PERIOD (circle one)

1st, 2nd, 3rd, 4th, 5th ANNUAL PERIOD (circle one)

ONCE PER PERMIT TERM

		Acenaphthene	625	10.0	N/A	G or C		NA
275	34222	Anthracene	625	10.0		G or C		NA
276	34526	Benzo(a)anthracene	625	10.0		G or C		NA
648		Benzo(b)fluoranthene	625	10.0		G or C		NA
278	34242	Benzo(k)fluoranthene	625	10.0		G or C		NA
277	34247	Benzo(a)pyrene	625	10.0		G or C		NA
		Butyl benzyl phthalate	625	10.0		G or C		NA
282	34320	Chrysene	625	10.0		G or C		NA
654		Dibenz(a,h)anthracene	625	20.0		G or C		NA
		Dibutyl phthalate	625	10.0		G or C		NA
259	34536	1,2-Dichlorobenzene	625	10.0		G or C		NA
264	34566	1,3-Dichlorobenzene	625	10.0		G or C		NA
266	34571	1,4-Dichlorobenzene	625	10.0		G or C		NA
		Diethyl phthalate	625	10.0		G or C		NA
170		Di-2-Ethylhexyl Phthalate	625	10.0		G or C		NA
239	34611	2,4-Dinitrotoluene	625	10.0		G or C		NA
287	34376	Fluoranthene	625	10.0		G or C		NA
288	34381	Fluorene	625	10.0		G or C		NA
651		Indeno(1,2,3-cd)pyrene	625	20.0		G or C		NA
650		Isophorone	625	10.0		G or C		NA
293	34696	Naphthalene	625	10.0		G or C		NA
		Nitrobenzene	625	10.0		G or C		NA

DEPARTMENT OF ENVIRONMENTAL QUALITY
WATER QUALITY MONITORING
ATTACHMENT A

FACILITY NAME: Lake Gaston Water Treatment Plant

ADDRESS: 5416 Military Hwy West
Chespeake, VA 23321

PERMIT NO.: VA0091405 OUTFALL NO.: 001

DEQ PARAM #	EPA PARAM #	CHEMICAL	EPA ANALYSIS NO.	QUANTIFICATION LEVEL[1]	REPORTING RESULTS	SAMPLE TYPE[2]	SAMPLE FREQUENCY[3]	SPECIFIC TARGET VALUE[4]
296	34469	Pyrene	625	10.0	NA	G or C		NA
		1,2,4 Trichlorobenzene	625	10.0	NA	G or C		NA

VOLATILES

REPORTING PERIOD: FROM: / / TO: / /

REPRESENTING: 1st, 2nd, 3rd, 4th, 5th, 6th, 7th, 8th, 9th, 10th SEMIANNUAL PERIOD (circle one)

1st, 2nd, 3rd, 4th, 5th ANNUAL PERIOD (circle one)

ONCE PER PERMIT TERM

216	34030	Benzene	624	10.0	NA	G		NA
484	32104	Bromoform	624	10.0		G		NA
236	32102	Carbon Tetrachloride	624	10.0		G		NA
652		Chlorodibromomethane	624	10.0		G		NA
223	32106	Chloroform	624	10.0		G		NA
649		Dichloromethane	624	20.0		G		NA
244	79603	Dichlorobromomethane	624	10.0		G		NA
260	34531	1,2-Dichloroethane	624	10.0		G		NA
		1,1-Dichloroethylene	624	10.0		G		NA
172	34371	Ethylbenzene	624	10.0		G		NA
653		Monochlorobenzene	624	50.0		G		NA
220	34475	Tetrachloroethylene	624	10.0		G		NA
222	34010	Toluene	624	10.0		G		NA
155	39180	Trichloroethylene	624	10.0		G		NA
173	39175	Vinyl Chloride	624	10.0		G		NA

ACIDS EXTRACTABLES

REPORTING PERIOD: FROM: / / TO: / /

REPRESENTING: 1st, 2nd, 3rd, 4th, 5th, 6th, 7th, 8th, 9th, 10th SEMIANNUAL PERIOD (circle one)

1st, 2nd, 3rd, 4th, 5th ANNUAL PERIOD (circle one)

ONCE PER PERMIT TERM

		2-Chlorophenol	625	10.0	NA	G or C		NA
		2,4 Dichlorophenol	625	10.0		G or C		NA
		2,4 Dimethylphenol	625	10.0		G or C		NA

DEPARTMENT OF ENVIRONMENTAL QUALITY
WATER QUALITY MONITORING
ATTACHMENT A

FACILITY NAME: Lake Gaston Water Treatment Plant

ADDRESS: 5416 Military Hwy West
Chespeake, VA 23321

PERMIT NO.: VA0091405 OUTFALL NO.: 001

DEQ PARAM #	EPA PARAM #	CHEMICAL	EPA ANALYSIS NO.	QUANTIFI-CATION LEVEL[1]	REPORTING RESULTS	SAMPLE TYPE[2]	SAMPLE FREQUENCY[3]	SPECIFIC TARGET VALUE[4]
210	39032	Pentachlorophenol	625	50.0	N/A	G or C		NA
175	46000	Phenol[5]	625	10.0		G or C		NA
602	34621	2,4,6-Trichlorophenol	625	10.0		G or C		NA

MISCELLANEOUS

REPORTING PERIOD: FROM: / / TO: / /

REPRESENTING: 1st, 2nd, 3rd, 4th, 5th, 6th, 7th, 8th, 9th, 10th SEMIANNUAL PERIOD (circle one)

1st, 2nd, 3rd, 4th, 5th ANNUAL PERIOD (circle one)

ONCE PER PERMIT TERM

039	00610	Ammonia as NH3-N	350.1	200	N/A	C	C	NA
		Chlorides (mg/l)	(6)	(7)		C	(FW & PWS)	NA
005	50060	Chlorine, Total Residual	(6)	100		G	C	NA
018	00720	Cyanide	335.2	10.0		G	C	NA
306	03556	Dioxin	1613	0.00001		C	C	NA
		Fecal Coliform N/CML)	(6)	(7)		G	C	NA
		Foaming Agents (as MBAS)	(6)	(7)		G	(PWS)	NA
137	00900	Hardness (as mg/l $CaCO_3$)	(6)	(7)		C	C	NA
		Hydrogen Sulfide	(6)	(7)		G	C	NA
		Nitrate (as mg/l N)	(6)	(7)		C	C	NA
009	00945	Sulfate (mg/l)	(6)	(7)		C	(PWS)	NA
		Total Dissolved Solids (mg/l)	(6)	(7)		C	(PWS)	NA
350	30340	Tributyltin	(9)	(9)		C	C	
252	81551	Xylenes (total)	SW 846 Method 8021B	(7)		G	C	NA

Name of Principal Exec. Officer or Authorized Agent / Title

Lake Gaston Water Treatment Plant Sludge Handling Process

The Sludge Thickener is used to receive and thicken the solids produced at the Lake Gaston WTP. The sludge thickener permits the concentration of the solids to increase prior to subsequent processing, and also provides additional storage volume for the solids, which could become necessary during high raw turbidity events.

The Sludge Thickener has an inside diameter of 45 feet, a side wall depth of 18 feet and a maximum storage volume of 214,000 gallons. The various solids flow streams are collected in the Thickener Influent box. From the Influent Box, the combined flows are directed to the 12" Sludge Influent Pipe. The influent pipe is directed up the Thickener dry center column to the influent well, which insures uniform flow distribution in the tank. Two rotating truss arms direct the thickened solids to the center sludge sump at the bottom of the tank, where a 4" thick sludge pipe then conveys the solids to the Centrifuge Feed Pumps.

The Centrifuge System dewaters thickened residuals from the Sludge Thickener prior to hauling to the City of Chesapeake Disposal Site on Indian Creek Road (please see map provided). The Centrifuge System consists of the Sludge Grinder, Centrifuge Feed Pumps, the Centrifuge, the Concentrate Pump Station, and Truck Unloading Station.

The Sludge Grinder grinds large debris to prevent interference with the Centrifuge. The Grinder consists of two shafts, stacked with intermeshing cutters and spacers, which rotate in opposite directions. Two progressing cavity Moyno® Centrifuge Feed Pumps are used for pumping Sludge Thickener residuals to the Centrifuge. Each pump has a design capacity of approximately 120 gpm, and is equipped with an adjustable speed drive to permit the operator adjustment of the pump speed, and in turn the pump capacity.

The Centrifuge, an Alfa Laval ALDEC 40, is used to process the thickened solids from the Sludge Thickener to increase the solids concentration of the sludge prior to off-site disposal. Two submersible pumps in the Concentrate Pump Station convey the Centrifuge's centrate back to the Sludge Thickener.

A Polymer System is employed to enhance the dewatering process. Polymer is fed to the piping upstream of the Centrifuge to increase the capture rate.

Solids dewatered to approximately 8 to 10 percent solids are then collected in a roll off container located directly beneath the centrifuge. Full boxes are then transported to the Disposal Site for emptying.

Google Maps

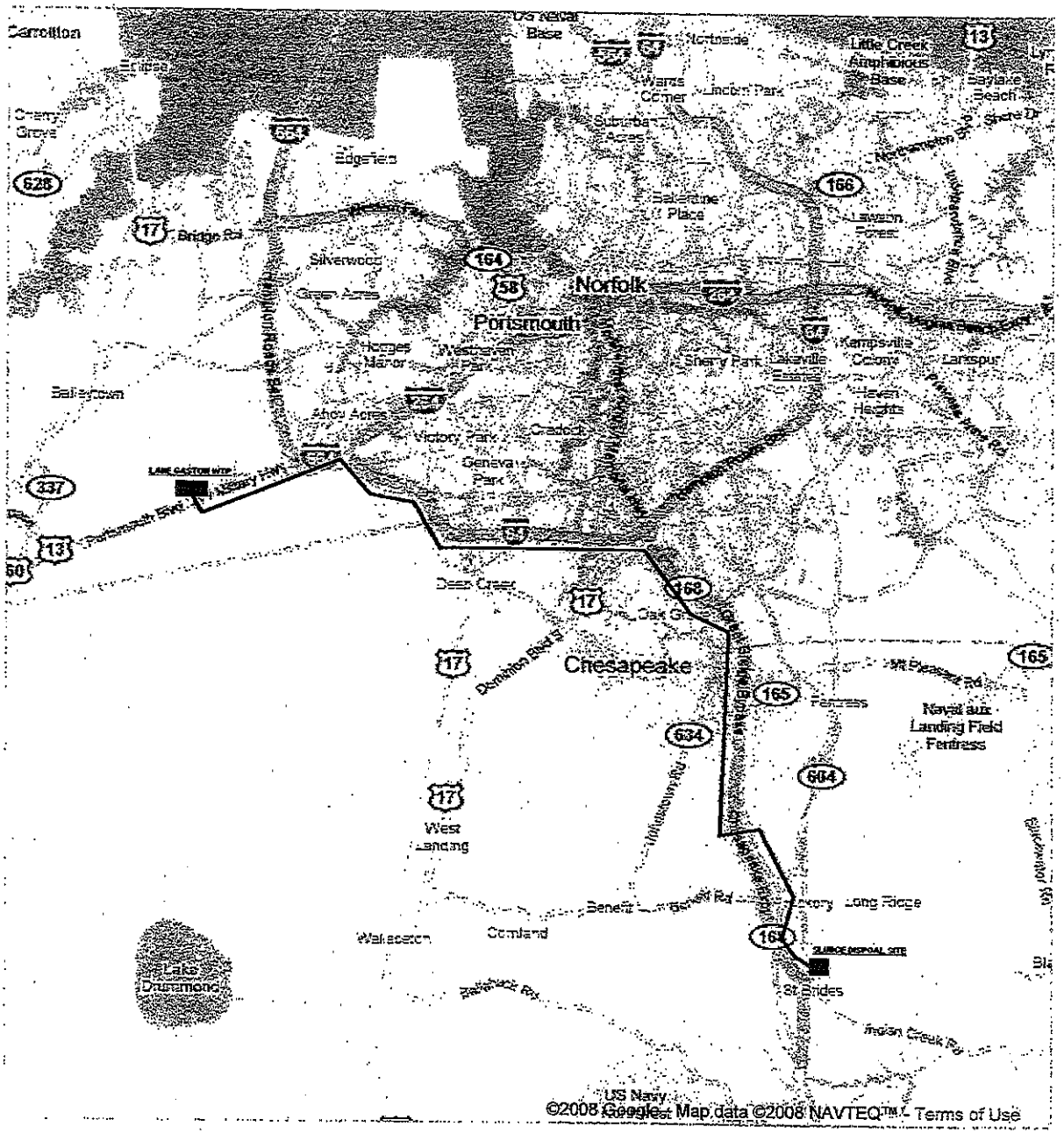
Carrollton
Edgewater
Cherry Grove
Edgefield
Bridge Rd
Silverwood
Green Acres
Norfolk
Portsmouth
Hodges Manor
Westhaven Park
Ballentine Place
Lawton Forest
Kempsville Colony
Larkspur
Sherry Park
Lakeville Estates
Haven Heights
Ballentown
Ahoy Acres
Victory Park
Cradock
Geneva Park
Deep Creek
Oak Grove
Chesapeake
Dominion Blvd
Fentress
Naval aux Landing Field Fentress
West Landing
Long Ridge
Walnut Hill
Cornland
Lake Drummond
St Brides
Indian Creek Rd
US Navy
©2008 Google - Map data ©2008 NAVTEQ™ - Terms of Use

Directions from Lake Gaston to the Indian Creek Disposal Site

1) Left from the plant on West Military Hwy. towards the Bowers Hill 64, 264, and 664 interchange.
2) Take 64 East toward Chesapeake.
3) Exit onto the Chesapeake Expressway South 168.
4) Take the second Hillcrest Road exit.
5) Turn right onto Battlefield Blvd.
6) Turn left onto Indian Creek Road.