Attachment 1 – Flow Frequency Memo

MEMORANDUM

DEPARTMENT OF ENVIRONMENTAL QUALITY
Piedmont Regional Office
4949-A Cox Road Glen Allen, Virginia 23060

SUBJECT: Flow Frequency Determination
Proposed Amelia Courthouse STP – VA0091707

TO: Jarad Morton

FROM: Jennifer V. Palmore

DATE: September 9, 2005

COPIES: Modeling File

The Amelia County Sanitation District has applied for a new wastewater treatment plant discharge to Smacks Creek near Amelia Courthouse, VA. Stream flow frequencies are needed for use in developing water quality models and toxic effluent limitations for the VPDES permit.

According to records, the only streamflow measurements that have been collected in VAP-J10R were taken on the Appomattox River and are not comparable for use in this analysis. However, the DEQ conducted fifteen flow measurements on Nibbs Creek in an adjacent watershed from 1996 to 2003. The measurements were made above the confluence with Courthouse Branch near Amelia Courthouse. The measurements were correlated with the same day daily mean values from the continuous record gage on Deep Creek near Mannboro, VA (#02041000). The measurements and daily mean values were plotted on a logarithmic graph and a best fit power trend line was plotted through the data points. The required flow frequencies from the reference gage were plugged into the equation for the regression line and the associated flow frequencies at the measurement site on Nibbs Creek were calculated. Drainage area proportion was then used to calculate the flow frequencies on Smacks Creek at the discharge point. The data for the reference gage, measurement site, and discharge point are presented below and the regression analysis is attached.

Deep Creek near Mannboro, VA (#02041000)
Drainage Area = 158 mi^2
Period of Record = 1947-2003

1Q30 = 0.21 cfs	High Flow 1Q10 = 25 cfs
1Q10 = 0.80 cfs	High Flow 7Q10 = 29 cfs
7Q10 = 1.0 cfs	High Flow 30Q10 = 46 cfs
30Q10 = 2.8 cfs	HM = None
30Q5 = 5.3 cfs	

Nibbs Creek above Courthouse Branch at Amelia Courthouse, VA (#02040590)
Drainage Area = 17.81 mi^2

1Q30 = 0.04 cfs	High Flow 1Q10 = 2.39 cfs
1Q10 = 0.13 cfs (0.084 MGD)	High Flow 7Q10 = 2.72 cfs
7Q10 = 0.15 cfs (0.097 MGD)	High Flow 30Q10 = 4.03 cfs
30Q10 = 0.37 cfs	HM = None
30Q5 = 0.64 cfs (3.4 MGD)	

Smacks Creek at discharge point

Drainage Area = 6.40 mi^2

1Q30 = 0.01 cfs (0.0065 MGD)	High Flow 1Q10 = 0.86 cfs
1Q10 = 0.05 cfs (0.032 MGD)	High Flow 7Q10 = 0.98 cfs
7Q10 = 0.06 cfs (0.039 MGD)	High Flow 30Q10 = 1.45 cfs
30Q10 = 0.13 cfs (0.084 MGD)	HM = None
30Q5 = 0.23 cfs (0.15 MGD)	

The high flow months are December through April. The values at the discharge point were determined by drainage area proportions and do not address any withdrawals, discharges, or springs.

If you have any questions about this analysis or need any additional information, please let me know.

Nibbs Creek above Courthouse Branch near Amelia Courthouse, Va. (#02040590)
vs Deep Creek near Mannboro, VA (#02041000)

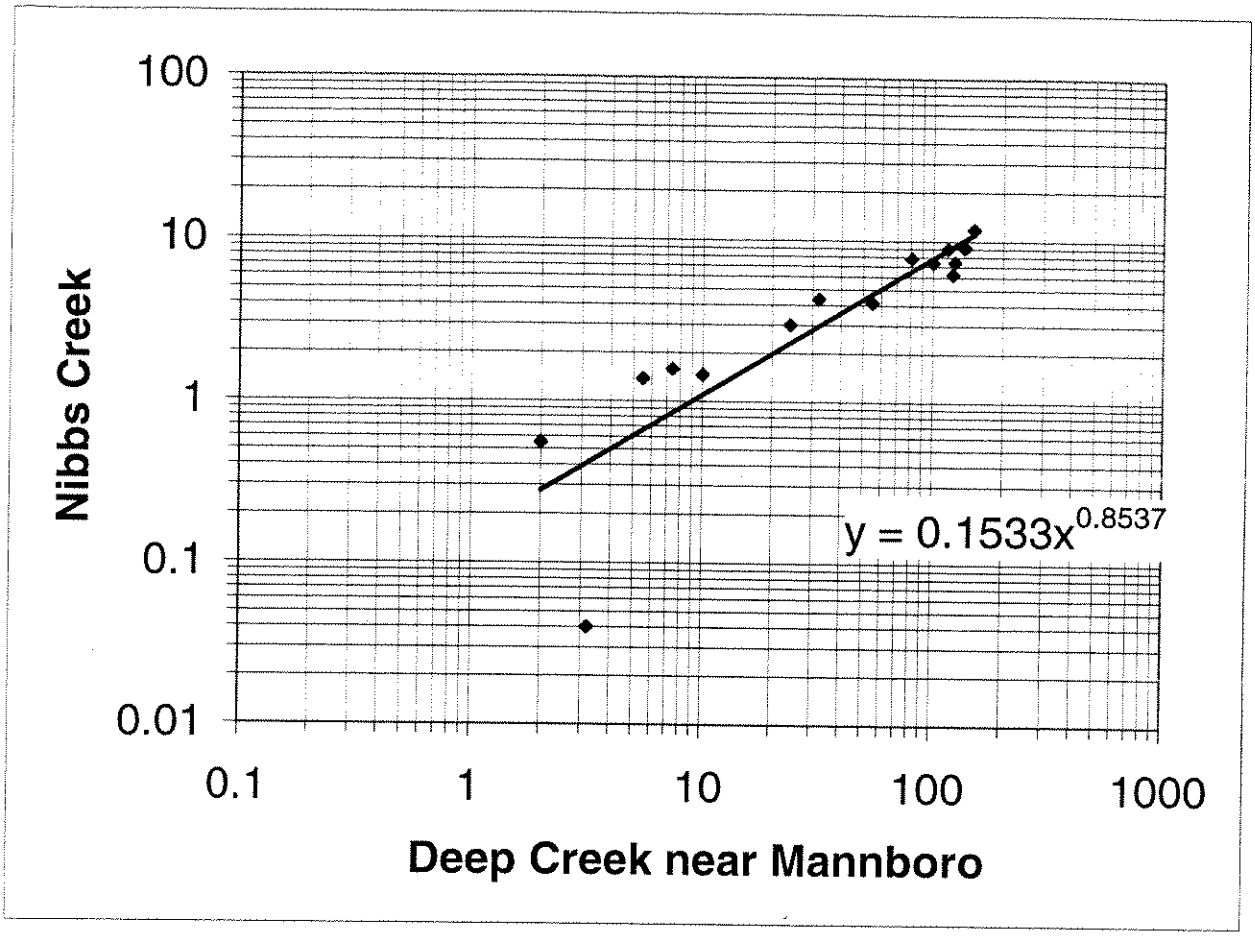

Flow Data (cfs)

Date	Deep	Nibbs
10/15/1996	100	7.39
5/16/1997	81	7.81
10/7/1997	5.5	1.38
9/14/1998	2	0.55
9/23/1998	7.4	1.58
5/13/1999	24	3.00
6/8/1999	10	1.46
8/10/1999	3.2	0.04
5/10/2000	55	4.14
5/10/2001	32	4.36
1/10/2003	122	6.25
3/19/2003	124	7.46
6/25/2003	137	9.15
10/2/2003	116	9.02
11/25/2003	150	11.80

SUMMARY OUTPUT

Regression Statistics	
Multiple R	0.953434
R Square	0.909036
Adjusted R Square	0.902039
Standard Error	1.146065
Observations	15

Flow Frequencies (cfs)

Deep		Nibbs	Smacks
0.21	1Q30	0.04	0.01
0.80	1Q10	0.13	0.05
1.0	7Q10	0.15	0.06
2.8	30Q10	0.37	0.13
5.3	30Q5	0.64	0.23
25	HF 1Q10	2.39	0.86
29	HF 7Q10	2.72	0.98
46	HF30Q10	4.03	1.45
None	HM	None	None
158	Ann Avg DA	17.81	6.40

Dec-Apr
Period 1947-2003

Attachment 2 - Process Diagrams

Proposed Amelia STP Flow Schematic

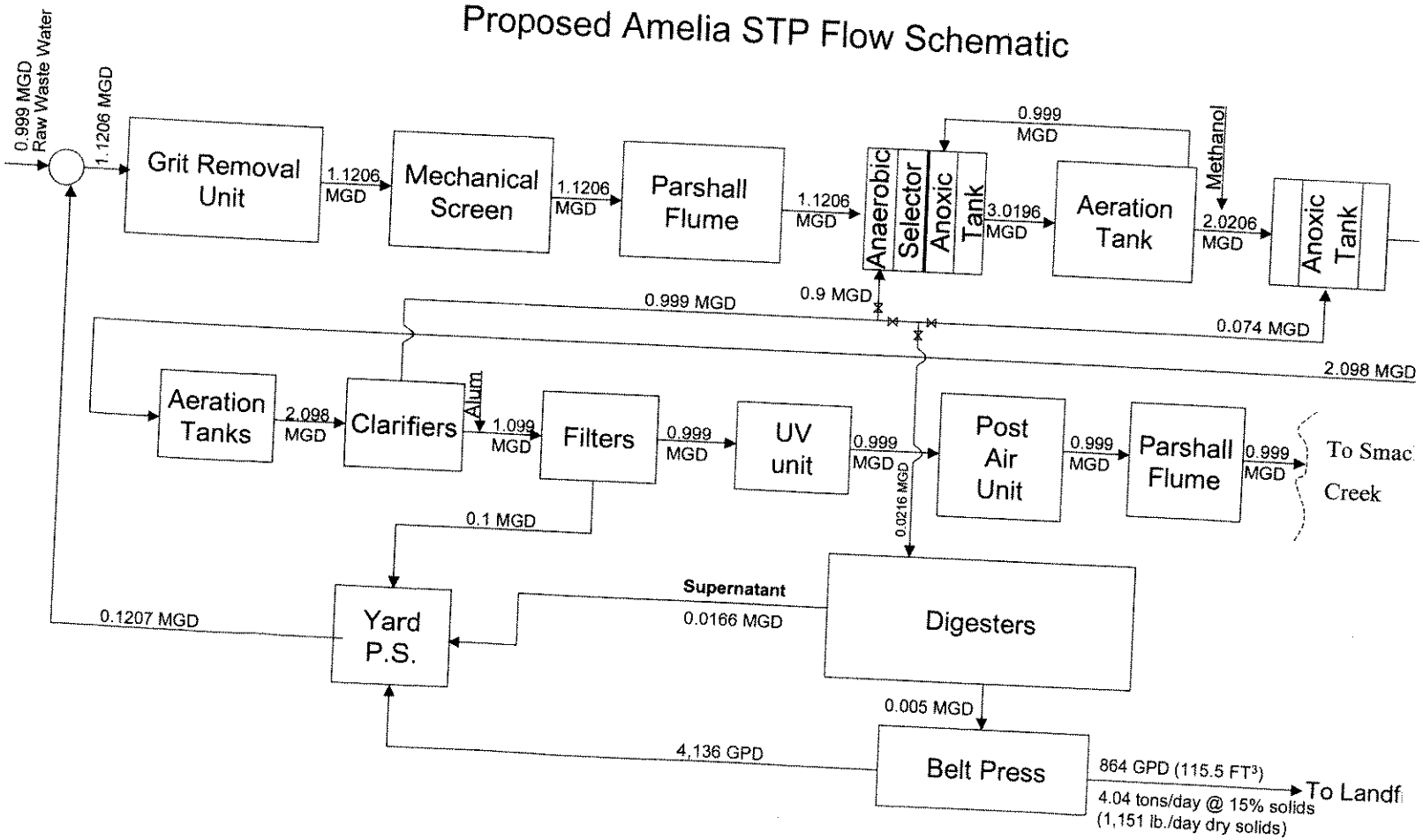

Proposed Amelia STP Flow Schematic

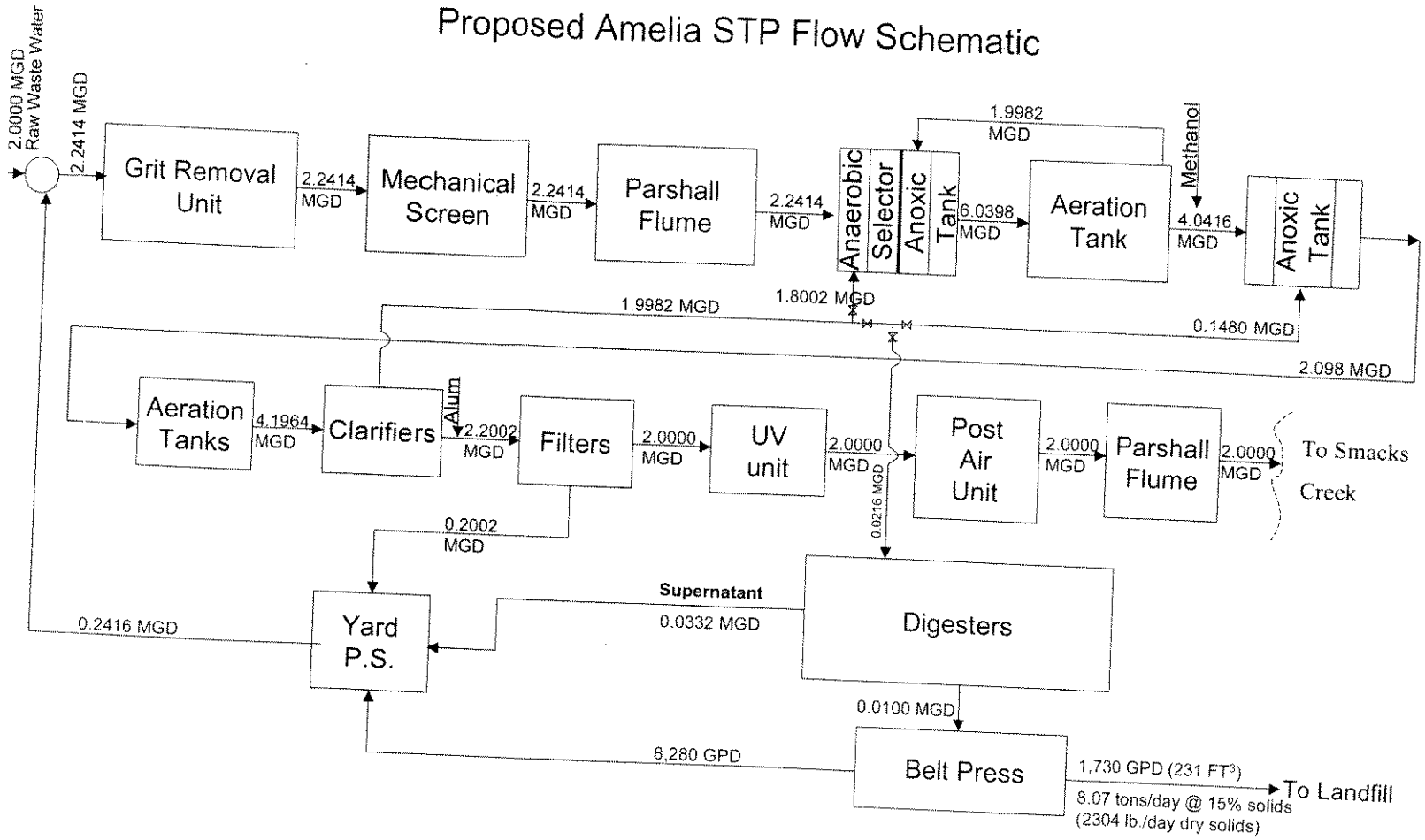

Proposed Amelia STP Flow Schematic

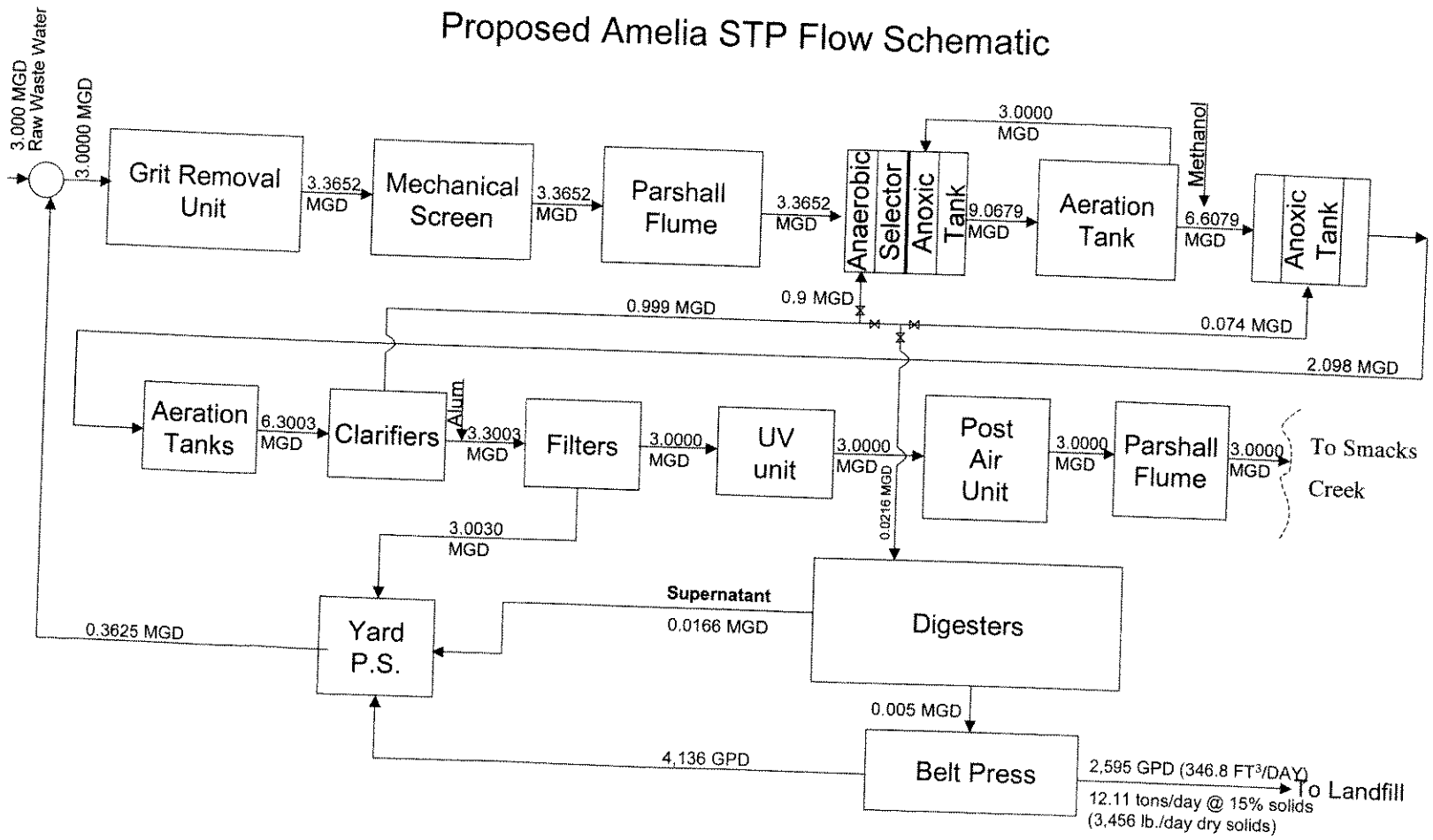

Attachment 3 – Sewage Sludge Proposed Haul Route

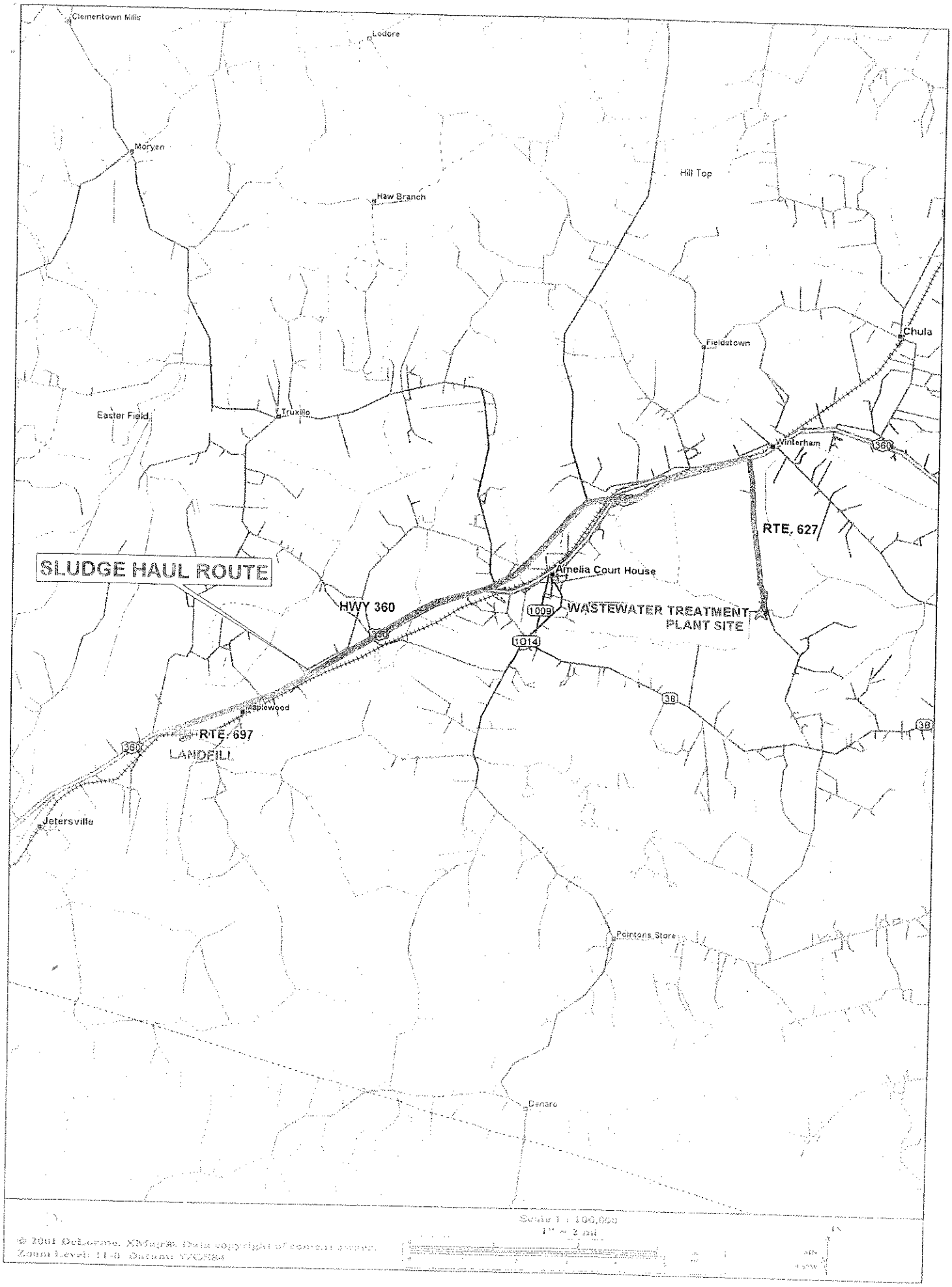
Clementown Mills
Lodore
Moryen
Hill Top
Haw Branch
Chula
Fieldstown
Easter Field
Truxillo
Winterham
360
RTE. 627
SLUDGE HAUL ROUTE
Amelia Court House
HWY 360
1009
WASTEWATER TREATMENT
PLANT SITE
1014
3B
Maplewood
RTE. 697
LANDFILL
Jetersville
Pointons Store
Denaro

Attachment 4 -Topo Map

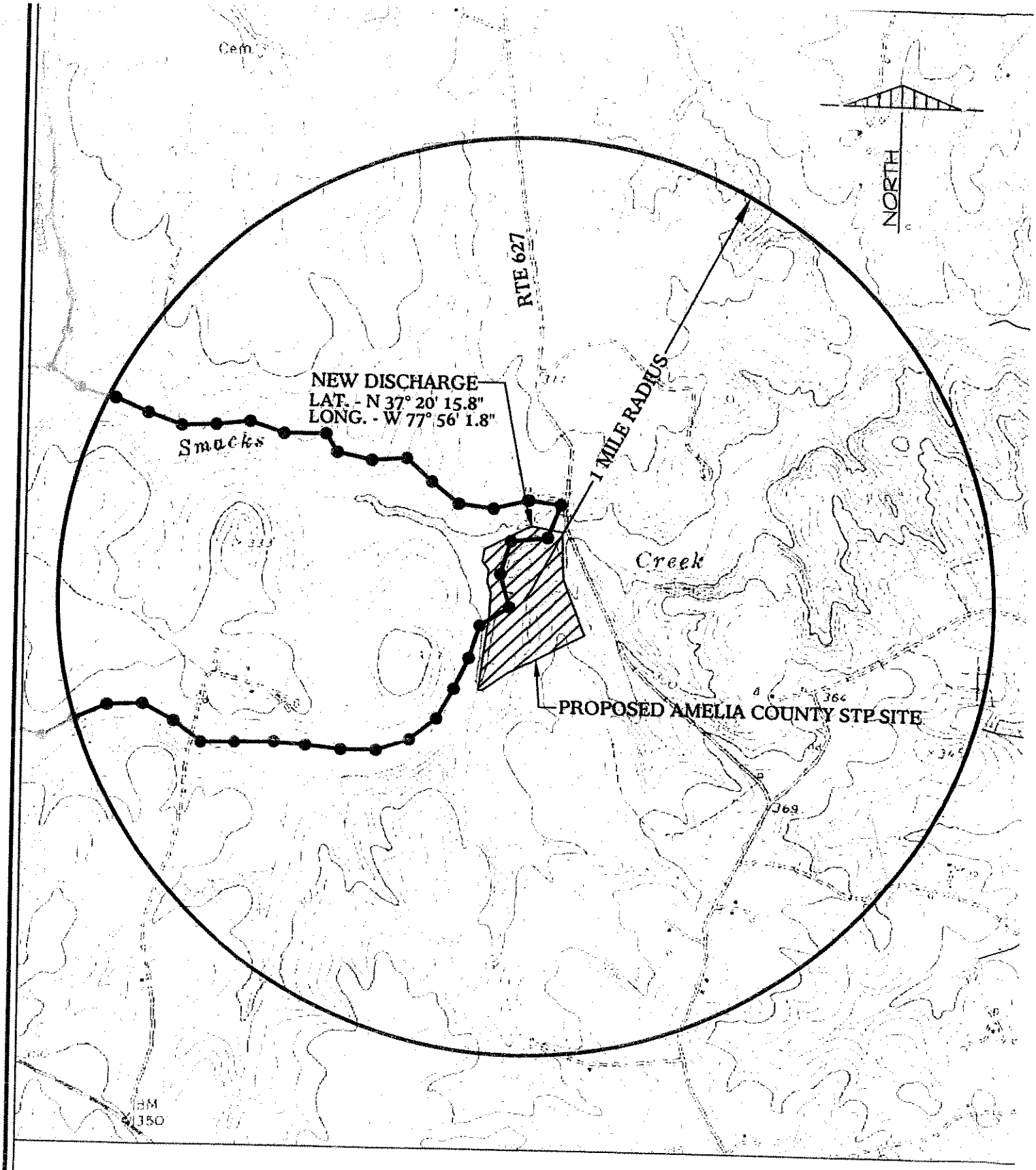

VICINITY MAP

USGS QUADRANGLE:
AMELIA COURT HOUSE, VA.

PREPARED BY:

B & B Consultants, Inc.
Engineers · Surveyors · Lab Analysts ·
Plant Operators · Environmental Services
Chase City & South Hill, Virginia

0 750 1,500 3,000 4,500

SCALE: 1" = 1,500'

Attachment 5 – STORET Data

Ambient Stream Data

Station_ID	Collection_Date_Time	Field_pH (SU)	DO_Probe (mg/l)	Temperature (˚C)	Field_Data_Comment
2-SMK002.57	8/20/03 11:45	6.98	7.59	21.73	NORMAL FLOW
	10/8/03 11:40	6.85	8.97	15.35	NORMAL FLOW
	12/2/03 12:55	6.61	11.71	5.86	NORMAL FLOW.
	2/24/04 12:20	7.07	12.58	6.12	NORMAL FLOW.
	4/29/04 12:30	6.99	10.25	15.27	--
	6/2/04 11:55	7.11	8	19.93	NORMAL FLOW
	6/29/04 13:15	7.07	7.91	21.13	NORMAL FLOW
	9/2/04 11:30	7.08	8.37	20.85	ABOVE NORMAL FLOW
	11/18/04 13:00	6.92	10.47	10.73	--
	1/4/05 11:05	7.09	10.52	11.38	NORMAL FLOW
	3/3/05 10:55	6.97	12.92	2.67	NORMAL FLOW
Max		7.11	12.92	21.73	
Min		6.61	7.59	2.67	
Average		6.98	9.94	13.73	
90%		7.09	12.58	21.13	
10%		6.85	7.91	5.86	

Ambient Temperature Data, High Flow Months (Dec - Apr)

Station_ID	Collection_Date_Time	Temperature (˚C)	Field_Data_Comment
2-SMK002.57	12/2/03 12:55	5.86	NORMAL FLOW.
	2/24/04 12:20	6.12	NORMAL FLOW.
	4/29/04 12:30	15.27	--
	1/4/05 11:05	11.38	NORMAL FLOW
	3/3/05 10:55	2.67	NORMAL FLOW
Max		15.27	
Min		2.67	
Average		8.26	
90%		13.71	
10%		3.95	

Ambient Stream Data

Station_ID	Collection_Date_Time	Nitrogen, Total (mg/l as N)	Nitrogen, Ammonia, Total (mg/l as N)	Nitrite Plus Nitrate, Total 1 DET. (mg/l as N)	Phosphorus, Total (mg/l as P)	Hardness, Total (mg/l as CACO3)	E. Coli - MTEC - MF (NO/100ML)
SMK002.57	8/20/2003 11:45	1.0400	0.0400	0.1700	0.0500	27.3	150.0
	10/8/2003 11:40	0.5000	0.0400	0.1300	0.0300	24.3	100.0
	12/2/2003 12:55	0.6500	0.0400	0.1800	0.0400	24.0	50.0
	2/24/2004 12:20	0.3900	0.0400	0.1800	0.0300	14.1	75.0
	4/29/2004 12:30	0.7200	0.0500	0.1500	0.0400	25.9	75.0
	6/2/2004 11:55	0.6500	0.1100	0.2400	0.0400	30.0	75.0
	6/29/2004 13:15	0.4700	0.0400	0.2200	0.0400	28.0	150.0
	9/2/2004 11:30	0.5800	0.0400	0.1900	0.0600	23.4	380.0
	11/18/2004 13:00	0.4000	0.0400	0.1900	0.0400	32.0	75.0
	1/4/2005 11:05	0.4200	0.0400	0.1800	0.0300	26.0	100.0
	3/3/2005 10:55	0.4500	0.0400	0.2100	0.0200	24.0	50.0
High		1.04	0.11	0.24	0.06	32.00	380.00
Low		0.39	0.04	0.13	0.02	14.10	50.00
Average		0.57	0.05	0.19	0.04	25.36	116.36
90%		0.72	0.05	0.22	0.05	30.00	150.00
10%		0.40	0.04	0.15	0.03	23.40	50.00

									Parm	00530		00600	
									Name	RESIDUE, TOTAL NONFILTRABLE (MG/L)		NITROGEN, TOTAL (MG/L AS N)	
ta Id	Collection Date Time	Depth Desc	Depth	Temp Celcius	Do Probe	Field Ph	Container Id Desc	Comment		Value	Com Code	Value	Com Code
-SMK002.57	08/20/2003 11:45	S	0.3	21.73	7.59	6.98	R	NORMAL FLOW		4.0000	NULL	1.0400	NULL
	10/08/2003 11:40	S	0.3	15.35	8.97	6.85	R	NORMAL FLOW		6.0000	NULL	.5000	NULL
	12/02/2003 12:55	S	0.3	5.86	11.71	6.61	R	NORMAL FLOW		5.0000	NULL	.6500	NULL
	02/24/2004 12:20	S	0.3	6.12	12.58	7.07	R	NORMAL FLOW		6.0000	NULL	.3900	NULL
	04/29/2004 12:30	S	0.3	15.27	10.25	6.99	R	NULL		5.0000	NULL	.7200	NULL
	06/02/2004 11:55	S	0.3	19.93	8	7.11	R	NORMAL FLOW		7.0000	NULL	.6500	NULL
	06/29/2004 13:15	S	0.3	21.13	7.91	7.07	R	NORMAL FLOW		6.0000	NULL	.4700	NULL
	09/02/2004 11:30	S	0.3	20.85	8.37	7.08	R	ABOVE NORMAL FLOW		13.0000	NULL	.5800	NULL
	11/18/2004 13:00	S	0.3	10.73	10.47	6.92	R	NULL		5.0000	NULL	.4000	NULL
	01/04/2005 11:05	S	0.3	11.38	10.52	7.09	R	NORMAL FLOW		5.0000	NULL	.4200	NULL
	03/03/2005 10:55	S	0.3	2.67	12.92	6.97	R	NORMAL FLOW		6.0000	NULL	.4500	NULL

		00610		00630		00665		00900		31648		82079	
		NITROGEN, AMMONIA, TOTAL (MG/L AS N)		NITRITE PLUS NITRATE, TOTAL 1 DET. (MG/L AS N)		PHOSPHORUS, TOTAL (MG/L AS P)		HARDNESS, TOTAL (MG/L AS CACO3)		E. COLI - MTEC-MF N0/100ML		TURBIDITY,LAB NEPHELOMETRIC TURBIDITY UNITS, NTU	
		Value	Com Code	Value	Com Code	Value	Com Code	Value	Com Code	Value	Com Code	Value	Com Code
d	Collection Date Time												
MK002.57	08/20/2003 11:45	.0400	NULL	.1700	NULL	.0500	NULL	27.3000	NULL	150.0000	NULL	16.0000	NULL
	10/08/2003 11:40	.0400	U	.1300	NULL	.0300	NULL	24.3000	NULL	100.0000	NULL	14.0000	NULL
	12/02/2003 12:55	.0400	NULL	.1800	NULL	.0400	NULL	24.0000	NULL	50.0000	NULL	12.0000	NULL
	02/24/2004 12:20	.0400	U	.1800	NULL	.0300	NULL	14.1000	NULL	75.0000	NULL	13.0000	NULL
	04/29/2004 12:30	.0500	NULL	.1500	NULL	.0400	NULL	25.9000	NULL	75.0000	NULL	12.0000	NULL
	06/02/2004 11:55	.1100	NULL	.2400	NULL	.0400	NULL	30.0000	NULL	75.0000	NULL	20.0000	NULL
	06/29/2004 13:15	.0400	U	.2200	NULL	.0400	NULL	28.0000	NULL	150.0000	NULL	12.0000	NULL
	09/02/2004 11:30	.0400	NULL	.1900	NULL	.0600	NULL	23.4000	NULL	380.0000	NULL	14.0000	NULL
	11/18/2004 13:00	.0400	NULL	.1900	NULL	.0400	NULL	32.0000	NULL	75.0000	NULL	12.0000	NULL
	01/04/2005 11:05	.0400	U	.1800	NULL	.0300	NULL	26.0000	NULL	100.0000	NULL	11.0000	NULL
	03/03/2005 10:55	.0400	U	.2100	NULL	.0200	NULL	24.0000	NULL	50.0000	NULL	10.3000	NULL

Attachment 6 – Stream Sanitation Memo

MEMORANDUM

DEPARTMENT OF ENVIRONMENTAL QUALITY
Piedmont Regional Office

4949-A Cox Road, Glen Allen, VA 23060-6296 804/527-5020

SUBJECT: **Stream Sanitation Analysis – Smacks Creek**
Proposed Amelia Courthouse STP (VA0091707)

TO: **Jarad Morton**

FROM: **Jennifer V. Palmore**

DATE: **October 12, 2005**

A request for a stream sanitation analysis for a proposed Amelia Courthouse Sanitary District wastewater treatment plant was received on August 11, 2005. The discharge will be located on Smacks Creek on the upstream side of the Route 627 bridge. The proposed design flow of the facility is 0.999 MGD.

The water quality of Smacks Creek was sampled at the Route 153 bridge from 2003-2005. This is approximately 4 miles downstream of the proposed discharge. The data retrieval is attached. The data meets current Water Quality Standards and the dissolved oxygen values are considerably above the minimum standards; therefore, the creek is considered a Tier 2 water and antidegradation is applied.

A flow frequency analysis was performed on September 9, 2005. The analysis is attached. The 7Q10 flow of Smacks Creek at the proposed discharge point is 0.04 MGD (0.05 cfs).

A site visit was performed by Jennifer Palmore and Jarad Morton on October 6, 2005. Although the stream has a low velocity, there is a well-defined channel and no evidence of a dissolved oxygen problem, as discussed above, therefore the stream was considered modelable using DEQ's Regional Model 4.1. The modeling input and output are attached. The model indicates that with a discharge flow of 0.999 MGD the following limits are necessary to maintain a maximum 0.200 mg/L decrease in background dissolved oxygen at 7Q10 conditions:

Q:	0.999 MGD
$cBOD_5$:	5 mg/L
TKN:	3.0 mg/L
DO :	6.9 mg/L

If you have any questions about this analysis or need any additional information, please do not hesitate to contact me.

REGIONAL MODELING SYSTEM VERSION 4.0

Model Input File for the Discharge to SMACKS CREEK.

File Information

File Name:	C:\Documents and Settings\jvpalmore\My Documents\models\Amelia Cour
Date Modified:	October 12, 2005

Water Quality Standards Information

Stream Name:	SMACKS CREEK
River Basin:	James River Basin
Section:	5c
Class:	III - Nontidal Waters (Coastal and Piedmont)
Special Standards:	None

Background Flow Information

Gauge Used:	02040590 Nibbs Creek above Courthouse Branch
Gauge Drainage Area:	17.81 Sq.Mi.
Gauge 7Q10 Flow:	0.097 MGD
Headwater Drainage Area:	6.4 Sq.Mi.
Headwater 7Q10 Flow:	3.485683E-02 MGD (Net; includes Withdrawals/Discharges)
Withdrawal/Discharges:	0 MGD
Incremental Flow in Segments:	5.446379E-03 MGD/Sq.Mi.

Background Water Quality

Background Temperature:	28 Degrees C
Background cBOD5:	2 mg/l
Background TKN:	0 mg/l
Background D.O.:	7.095954 mg/l

Model Segmentation

Number of Segments:	1
Model Start Elevation:	245 ft above MSL
Model End Elevation:	227 ft above MSL

REGIONAL MODELING SYSTEM VERSION 4.0

Model Input File for the Discharge to SMACKS CREEK.

Segment Information for Segment 1

Definition Information

Segment Definition:	A discharge enters.
Discharge Name:	VA0091707 PROPOSED AMELIA COURTHOUSE STP
VPDES Permit No.:	

Discharger Flow Information

Flow:	0.999 MGD
cBOD5:	5 mg/l
TKN:	3 mg/l
D.O.:	6.9 mg/l
Temperature:	28 Degrees C

Geographic Information

Segment Length:	1.23 miles
Upstream Drainage Area:	6.4 Sq.Mi.
Downstream Drainage Area:	0 Sq.Mi.
Upstream Elevation:	245 Ft.
Downstream Elevation:	227 Ft.

Hydraulic Information

Segment Width:	18 Ft.
Segment Depth:	3 Ft.
Segment Velocity:	0.025 Ft./Sec.
Segment Flow:	1.034 MGD
Incremental Flow:	-0.035 MGD (Applied at end of segment.)

Channel Information

Cross Section:	Rectangular
Character:	Moderately Meandering
Pool and Riffle:	No
Bottom Type:	Silt
Sludge:	None
Plants:	None
Algae:	None

"Model Run For C:\Documents and Settings\jvpalmore\My Documents\models\Amelia Courthouse STP Smacks.mod On 10/12/2005 2:44:53 PM"

"Model is for SMACKS CREEK."
"Model starts at the VA0091707 PROPOSED AMELIA COURTHOUSE STP discharge."

"Background Data"

"7Q10"	"cBOD5"	"TKN"	"DO"	"Temp"
"(mgd)"	"(mg/l)"	"(mg/l)"	"(mg/l)"	"deg C"
.0349,	2,	0,	7.096,	28

"Discharge/Tributary Input Data for Segment 1"

"Flow"	"cBOD5"	"TKN"	"DO"	"Temp"
"(mgd)"	"(mg/l)"	"(mg/l)"	"(mg/l)"	"deg C"
.999,	5,	3,	,6.9,	28

"Hydraulic Information for Segment 1"

"Length"	"Width"	"Depth"	"Velocity"
"(mi)"	"(ft)"	"(ft)"	"(ft/sec)"
1.23,	18,	3,	.025

"Initial Mix Values for Segment 1"

"Flow"	"DO"	"cBOD"	"nBOD"	"DOSat"	"Temp"
"(mgd)"	"(mg/l)"	"(mg/l)"	"(mg/l)"	"(mg/l)"	"deg C"
1.0339,	6.907,	12.247,	0,	7.887,	28

"Rate Constants for Segment 1. - (All units Per Day)"

"k1"	"k1@T"	"k2"	"k2@T"	"kn"	"kn@T"	"BD"	"BD@T"
.7,	1.011,	8.78,	10.615,	.15,	.278,	0,	0

"Output for Segment 1"
"Segment starts at VA0091707 PROPOSED AMELIA COURTHOUSE STP"

"Total"	"Segm."			
"Dist."	"Dist."	"DO"	"cBOD"	"nBOD"
"(mi)"	"(mi)"	"(mg/l)"	"(mg/l)"	"(mg/l)"
0,	0,	6.907,	12.247,	0
.1,	.1,	6.903,	9.566,	0
.2,	.2,	7.098,	7.472,	0
.3,	.3,	7.098,	5.836,	0
.4,	.4,	7.098,	5,	0
.5,	.5,	7.098,	5,	0
.6,	.6,	7.098,	5,	0
.7,	.7,	7.098,	5,	0
.8,	.8,	7.098,	5,	0
.9,	.9,	7.098,	5,	0
1,	1,	7.098,	5,	0
1.1,	1.1,	7.098,	5,	0
1.2,	1.2,	7.098,	5,	0
1.23,	1.23,	7.098,	5,	0

"END OF FILE"

MEMORANDUM

DEPARTMENT OF ENVIRONMENTAL QUALITY
Piedmont Regional Office
4949-A Cox Road Glen Allen, Virginia 23060

SUBJECT: Flow Frequency Determination
Proposed Amelia Courthouse STP – VA0091707

TO: Jarad Morton

FROM: Jennifer V. Palmore

DATE: September 9, 2005

COPIES: Modeling File

The Amelia County Sanitation District has applied for a new wastewater treatment plant discharge to Smacks Creek near Amelia Courthouse, VA. Stream flow frequencies are needed for use in developing water quality models and toxic effluent limitations for the VPDES permit.

According to records, the only streamflow measurements that have been collected in VAP-J10R were taken on the Appomattox River and are not comparable for use in this analysis. However, the DEQ conducted fifteen flow measurements on Nibbs Creek in an adjacent watershed from 1996 to 2003. The measurements were made above the confluence with Courthouse Branch near Amelia Courthouse. The measurements were correlated with the same day daily mean values from the continuous record gage on Deep Creek near Mannboro, VA (#02041000). The measurements and daily mean values were plotted on a logarithmic graph and a best fit power trend line was plotted through the data points. The required flow frequencies from the reference gage were plugged into the equation for the regression line and the associated flow frequencies at the measurement site on Nibbs Creek were calculated. Drainage area proportion was then used to calculate the flow frequencies on Smacks Creek at the discharge point. The data for the reference gage, measurement site, and discharge point are presented below and the regression analysis is attached.

Deep Creek near Mannboro, VA (#02041000)
Drainage Area = 158 mi^2
Period of Record = 1947-2003

1Q30 = 0.21 cfs	High Flow 1Q10 = 25 cfs
1Q10 = 0.80 cfs	High Flow 7Q10 = 29 cfs
7Q10 = 1.0 cfs	High Flow 30Q10 = 46 cfs
30Q10 = 2.8 cfs	HM = None
30Q5 = 5.3 cfs	

Nibbs Creek above Courthouse Branch at Amelia Courthouse, VA (#02040590)
Drainage Area = 17.81 mi^2

1Q30 = 0.04 cfs	High Flow 1Q10 = 2.39 cfs
1Q10 = 0.13 cfs	High Flow 7Q10 = 2.72 cfs
7Q10 = 0.15 cfs	High Flow 30Q10 = 4.03 cfs
30Q10 = 0.37 cfs	HM = None
30Q5 = 0.64 cfs	

Smacks Creek at discharge point

Drainage Area = 6.40 mi^2

1Q30 = 0.01 cfs	High Flow 1Q10 = 0.86 cfs
1Q10 = 0.05 cfs	High Flow 7Q10 = 0.98 cfs
7Q10 = 0.06 cfs	High Flow 30Q10 = 1.45 cfs
30Q10 = 0.13 cfs	HM = None
30Q5 = 0.23 cfs	

The high flow months are December through April. The values at the discharge point were determined by drainage area proportions and do not address any withdrawals, discharges, or springs.

If you have any questions about this analysis or need any additional information, please let me know.

Nibbs Creek above Courthouse Branch near Amelia Courthouse, Va. (#02040590)
vs Deep Creek near Mannboro, VA (#02041000)

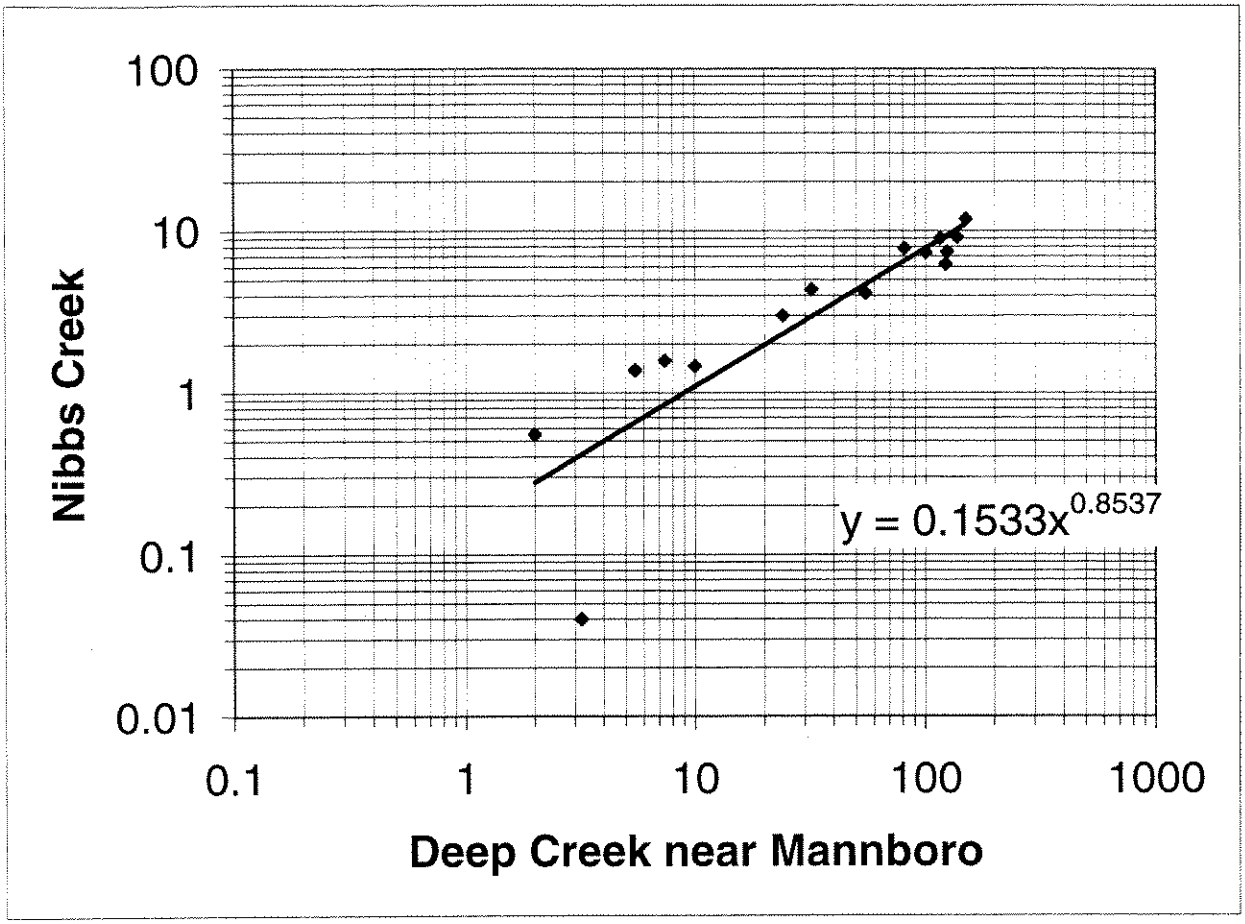

Flow Data (cfs)

Date	Deep	Nibbs
10/15/1996	100	7.39
5/16/1997	81	7.81
10/7/1997	5.5	1.38
9/14/1998	2	0.55
9/23/1998	7.4	1.58
5/13/1999	24	3.00
6/8/1999	10	1.46
8/10/1999	3.2	0.04
5/10/2000	55	4.14
5/10/2001	32	4.36
1/10/2003	122	6.25
3/19/2003	124	7.46
6/25/2003	137	9.15
10/2/2003	116	9.02
11/25/2003	150	11.80

SUMMARY OUTPUT

Regression Statistics	
Multiple R	0.953434
R Square	0.909036
Adjusted R Square	0.902039
Standard Error	1.146065
Observations	15

Flow Frequencies (cfs)

Deep		Nibbs	Smacks
0.21	1Q30	0.04	0.01
0.80	1Q10	0.13	0.05
1.0	7Q10	0.15	0.06
2.8	30Q10	0.37	0.13
5.3	30Q5	0.64	0.23
25	HF 1Q10	2.39	0.86
29	HF 7Q10	2.72	0.98
46	HF30Q10	4.03	1.45
None	HM	None	None
158	Ann Avg DA Dec-Apr Period 1947-2003	17.81	6.40