Attachment 7 – Site Specific Modeling

DRAFT

WASTEWATER DISCHARGE REPORT:

SITE-SPECIFIC MODELING FOR VPDES DISCHARGE LIMITS AT THE NEW AMELIA COURTHOUSE SANITARY DISTRICT WATER RECLAMATION FACILITY

Prepared for:

Amelia Courthouse Sanitary District
County of Amelia
P.O. Box A
Amelia, VA 23002

Prepared by:

B & B Consultants, Inc.
Engineers-Surveyors-Lab Analysts-Plant Operators
Environmental Services
212 E. Ferrell St.
South Hill, Virginia 23970

May 2006

Revised October 2006

TABLE OF CONTENTS

1.0 INTRODUCTION 1

2.0 SITE-SPECIFIC MODELING APPROACH 1

2.1 Antidegradation and Dissolved Oxygen (D.O.) Depletion Limit 2
2.2 DEQ and Site Specific Model—D.O. Assumptions 2
2.3 Site Specific Model Approach—Verification 3
2.4 Application of the Site Specific Model 5

3.0 AMMONIA 10

4.0 SUMMARY OF REQUESTED PERMIT LIMITS 10

5.0 REFERENCES 12

TABLES

Table 1. Permit data used for DEQ modeling and for developing draft permit limits (for the low flow tier).

Table2. Replication of DEQ model results, using the site-specific model.

Table 3. Site-specific model parameters for the different flows and tiers.

Table 4. Site-specific model results for the high flow/Dec - April tier, at 0.999 MGD.

Table 5. Site-specific model results for the low flow/May - Nov tier, at 2 MGD.

Table 6. Site-specific model results for the low flow/May - Nov tier, at 2 MGD.

Table 7. Site-specific model results for the low flow/May - Nov tier, at 3 MGD.

Table 8. Site-specific model results for the high flow/Dec - April tier, at 3 MGD.

Table 9. Requested permit limits.

APPENDICES

APPENDIX A. Draft Permit, developed by DEQ on 12/13/2005.

APPENDIX B. Ammonia limit determination for high flow tiers.

FLOPPY DISK

- Replication of DEQ Model Results.xls
- High_flow_tier_at_0point999MGD.xls
- Low Flow Tier at 2 MGD.xls
- High Flow Tier at 2 MGD.xls
- Low Flow Tier at 3 MGD.xls
- High Flow Tier at 3 MGD.xls

1.0 INTRODUCTION

The County of Amelia plans to construct a new water reclamation facility using a new discharge water body, Smacks Creek. The Virginia DEQ recently developed a draft VPDES permit for the new discharge point, using a plant design flow rate of 0.999 MGD. Permit limits in this draft, while stringent, are considered acceptable in terms of engineering design for meeting them.

Given the rapid growth anticipated for this area, it is prudent to also apply for permit limits at flow rates of 2 and 3 MGD. This approach will aid planning efforts while ensuring maintenance of water quality in Smacks Creek. In addition, the new facility can benefit from seasonal tiering of permit limits, providing operational flexibility without being detrimental to water quality.

Preliminary investigations indicated that application of DEQ's standard permitting model, Regional Water Quality Model for Free Flowing Streams, using a flow rate of 3 MGD, would result in cost-prohibitive discharge limits at flow rates greater than 0.999 MGD. However, it was found that a site-specific approach, using the Streeter-Phelps model applied in the DEQ model, would result in discharge limits similar to those at 0.999 MGD.

This report was developed as a component of requesting VPDES permit limits at 0.999, 2, and 3 MGD, with seasonally tiered limits for each flow rate. The report details results of site-specific modeling of the new Amelia County discharge, and accompanying requested permit limits for the facility. Permit limits developed in the report are shown to be protective of water quality.

2.0 SITE-SPECIFIC MODELING APPROACH

The site-specific modeling approach is detailed below. The approach makes use of information from the draft permit document developed by the DEQ on December 12, 2005 (reproduced in Appendix A). This information includes results of a site visit by DEQ staff, stream characteristics, and other data for developing permit limits.

The site specific model is basically the same as the one in the DEQ model, applying the classic Streeter-Phelps dissolved oxygen sag equation. The applicability of this model is proven through duplicating the results of the draft permit.

2.1 Antidegradation and Dissolved Oxygen (D.O.) Depletion Limit

As noted in the permit draft, Smacks Creek is classified as a Tier 2 water body, such that antidegradation applies. Therefore, as noted in Guidance Memo No. 00-2011, "Guidance on Preparing VPDES Permit Limits," the following restriction holds: "The dissolved oxygen is not lowered more than 0.2 mg/l from the existing levels."

2.2 DEQ and Site Specific Model—D.O. Assumptions

Relevant aspects of the site-specific D.O. modeling, including assumptions, are discussed in this section. The DEQ model is described in detail in a documentation and users' manual (Phillips and van Soestbergen, 2001). Equation numbers referred to below correspond to the equations in this manual. Other assumptions used in the site-specific model are the same as those discussed by Phillips and van Soestbergen (2001).

One assumption of the DEQ model is that the D.O. of the stream above a discharge is at 90% of saturation D.O. (The saturation D.O. value is determined using an empirical equation provided in the users' manual.) As noted by Philips and van Soestbergen (2001), this (and other) model "default concentrations are based on extensive review of water quality monitoring data throughout Virginia and are considered reflective of the actual concentrations in most cases."

The DEQ model limits all D.O. stream values to 90% of saturation. As stated in the manual, "To simulate actual steady state behavior, the in-stream D.O. concentration in a segment is held constant when the calculated concentration rises to 90% of saturation D.O." The initial D.O. of the mixture of stream and effluent, calculated using the basic mass balance mix equation (Equation 19), is limited in the DEQ model to 90% of saturation at the mixture temperature.

The site-specific model developed for this report does not limit the initial D.O. calculated using the mix equation. It is reasoned that, because the minimum effluent D.O. is set using engineering design principles, the resulting initial D.O. of the mixture in the stream can in fact rise above background levels. This reasoning is particularly applicable where the effluent flows dominate when stream flows are at the 7Q10, which is the "streamflow that occurs over 7 consecutive days and has a 10-year recurrence interval period" (USGS, 2006), as in the present case. Nevertheless, effluent D.O. values must be at practicable levels, and therefore must be below saturation.

The initial mix D.O. value is a function of the effluent and headwater D.O. concentrations (the latter value is, as noted above, 90% of saturation). The DEQ modeling approach was developed to cover a wide spectrum of cases, and as such, is very conservative. The minimum effluent D.O. concentration is set as a VPDES permit limit. Therefore, in the present case, it is considered justifiable to allow the initial D.O. of the mixture used in the Streeter-Phelps model to be the value determined directly from the mix equation, using the effluent and background D.O. values.

2.3 Site Specific Model Approach—Verification

The site specific model developed for this report uses the same basic inputs, assumptions, and empirical equations as Regional Water Quality Model for Free Flowing Streams, Version 4.11. (Note that the site-specific model itself, with each run showing accompanying inputs and results, is included with this report on a floppy disk.) Key features of the site-specific model are noted below, followed by discussion of its verification.

The site visit by state staff led to the Best Professional Judgment decision that stream velocities projected by the modeler would be more accurate than using Manning's equation. Thus, the DEQ model option of using Manning's equation was not selected to determine stream velocities in developing the draft permit. The stream velocity used by the modeler was close to the value resulting from the continuity equation (Q = Av, where Q is the flow

rate, A is cross-sectional area, and v is the average stream velocity through the cross-section). Thus, stream velocity values in the site-specific model are determined using continuity. Further, as discussed below, conditions modeled here were not impacted by stream dimensions or velocities.

The site-specific model was developed in Excel, and was verified by showing that at a plant flow rate of 0.999 MGD during the low-flow tier, its output matches the output in the draft permit documentation. Effluent permit data from DEQ modeling and the resulting draft permit are shown in Table 1. The corresponding DEQ model output page is in Attachment 6 of Appendix A (the draft permit documentation).

Table 1. Permit data used for DEQ modeling and for developing draft permit limits (for the low flow tier).

Model Parameter	Value
Plant flow rate, MGD	0.999
cBOD5, mg/L	5
TKN, mg/L	3
Effluent D. O., mg/L	6.9
Effluent Temperature, °C	28

The site specific model output is shown in Table 2.

Table2. Replication of DEQ model results, using the site-specific model.

distance (mi)	D.O. Below Mixture's Saturation Value (Deficit) (mg/L)	Stream D.O. Recovery, Limited to 90% of Saturation Value (mg/L)	Decrease from Stream Headwater D.O. (mg/L)	Stream BODu (mg/L)
0	0.980	6.907	0.192	12.247
0.1	0.984	6.903	0.195	9.566
0.2	0.785	7.098	0.000	7.471
0.3	0.614	7.098	0.000	5.836
0.4	0.480	7.098	0.000	5.000
0.5	0.375	7.098	0.000	5.000
0.6	0.293	7.098	0.000	5.000
0.7	0.229	7.098	0.000	5.000
0.8	0.179	7.098	0.000	5.000
0.9	0.139	7.098	0.000	5.000
1	0.109	7.098	0.000	5.000
1.1	0.085	7.098	0.000	5.000
1.2	0.066	7.098	0.000	5.000
1.23	0.062	7.098	0.000	5.000

Comparing Table 2 with Attachment 6 of Appendix A shows that results of the site-specific model are the same as those of the corresponding draft's model, verifying the accuracy of the site-specific modeling approach.

2.4 Application of the Site Specific Model

Application of the site-specific model is detailed below. Requested permit limits are summarized in a later section. The model functions as a basic spreadsheet: stream and effluent characteristics are entered in designated cells. The model also permits rapid investigation of model sensitivity to various parameters.

Stream dimensions were varied during model runs to investigate the effect of changing those dimensions (and velocity) on stream D.O. values. These variations were accomplished by direct data entry and via use of the Excel goal-seeking function. Stream dimensions were varied, starting from the 18' wide by 3' deep projection used in developing the draft permit at 0.999 MGD. For the selected discharge parameter values input to the site-specific model,

listed below, these variations did not result in violation of antidegradation. Similarly, application of the goal seeking function was unsuccessful in finding any value of stream dimension that could result in a D.O. depletion violating antidegradation. Thus, model application using the selected effluent values was not sensitive to stream velocity (or stream dimensions).

At an effluent flow rate of 0.999 MGD, for the low-flow tier, the site-specific model results in permit limits that are the same as those determined using the DEQ model. Therefore, application of the site-specific model discussed in this section is confined to the high flow/winter tier at 0.999 MGD and to the two seasonal tiers at 2 and 3 MGD. In these cases, nitrification has been included, using the nitrogenous decay constant, k_n which varies according to nBODu ranges as tabulated in the DEQ permit manual, and with to temperature.

The basic model permit inputs are shown in Table 3. The accompanying model results for the conditions shown in Table 3 are shown in Tables 4 – 8.

Table 3. Site-specific model parameters for the different flows and tiers.

Model Parameter	Model Conditions for Different Average Plant Flow Rates				
	0.999 MGD, High Flow Tier (Dec-Apr)	2 MGD		3 MGD	
		Low Flow Tier (May-Nov)	High Flow Tier (Dec-Apr)	Low Flow Tier (May-Nov)	High Flow Tier (Dec-Apr)
cBOD5, mg/L	7	5	6	5	6
TKN, mg/L	6	3	5	3	5
Effluent D. O., mg/L	8.0	7.3	7.9	7.3	8.2
Effluent and Stream Temperature, °C	21.1[a]	28.0	21.1[a]	28.0	21.1[a]
Streamflow, MGD	0.63	0.0349	0.63	0.0349	0.63

[a]The 90 percentile ambient stream temperature was 21.1 °C (see Attachment 5 of Appendix A). This value was used as a conservative one for high flow tier calculations.

Table 4. Site-specific model results for the high flow/Dec - April tier, at 0.999 MGD.

distance (mi)	D.O. Below Mixture's Saturation Value (Deficit) (mg/L)	Stream D.O. Recovery Limited to 90% of Saturation (mg/L)	Decrease from Stream Headwater D.O. (mg/L)	Stream BODu (mg/L)
0	0.857	7.956	0.000	12.666
0.1	1.084	7.756	0.200	11.079
0.2	1.027	7.813	0.143	9.692
0.3	0.926	7.914	0.042	8.478
0.4	0.827	7.956	0.000	7.416
0.5	0.739	7.956	0.000	6.487
0.6	0.660	7.956	0.000	5.674
0.7	0.591	7.956	0.000	5.000
0.8	0.530	7.956	0.000	5.000
0.9	0.476	7.956	0.000	5.000
1	0.428	7.956	0.000	5.000
1.1	0.386	7.956	0.000	5.000
1.2	0.349	7.956	0.000	5.000
1.23	0.338	7.956	0.000	5.000

Table 5. Site-specific model results for the low flow/May - Nov tier, at 2 MGD.

distance (mi)	D.O. Below Mixture's Saturation Value (Deficit) (mg/L)	Stream D.O. Recovery Limited to 90% of Saturation (mg/L)	Decrease from Stream Headwater D.O. (mg/L)	Stream BODu (mg/L)
0	0.590	7.098	0.000	12.371
0.1	0.937	6.950	0.148	11.128
0.2	0.977	6.910	0.188	10.010
0.3	0.922	6.965	0.134	9.004
0.4	0.844	7.043	0.055	8.100
0.5	0.764	7.098	0.000	7.286
0.6	0.689	7.098	0.000	6.554
0.7	0.620	7.098	0.000	5.895
0.8	0.558	7.098	0.000	5.303
0.9	0.502	7.098	0.000	5.000
1	0.452	7.098	0.000	5.000
1.1	0.406	7.098	0.000	5.000
1.2	0.365	7.098	0.000	5.000
1.23	0.354	7.098	0.000	5.000

Table 6. Site-specific model results for the high flow/Dec - April tier, at 2 MGD.

distance (mi)	D.O. Below Mixture's Saturation Value (Deficit) (mg/L)	Stream D.O. Recovery Limited to 90% of Saturation (mg/L)	Decrease from Stream Headwater D.O. (mg/L)	Stream BODu (mg/L)
0	0.927	7.913	0.043	12.605
0.1	1.044	7.796	0.160	11.874
0.2	1.069	7.770	0.186	11.186
0.3	1.052	7.788	0.168	10.538
0.4	1.016	7.824	0.132	9.928
0.5	0.972	7.868	0.088	9.353
0.6	0.926	7.914	0.042	8.811
0.7	0.880	7.956	0.000	8.300
0.8	0.836	7.956	0.000	7.819
0.9	0.794	7.956	0.000	7.366
1	0.754	7.956	0.000	6.940
1.1	0.716	7.956	0.000	6.538
1.2	0.680	7.956	0.000	6.159
1.23	0.669	7.956	0.000	6.050

Table 7. Site-specific model results for the low flow/May - Nov tier, at 3 MGD.

distance (mi)	D.O. Below Mixture's Saturation Value (Deficit) (mg/L)	Stream D.O. Recovery Limited to 90% of Saturation (mg/L)	Decrease from Stream Headwater D.O. (mg/L)	Stream BODu (mg/L)
0	0.589	7.098	0.000	12.414
0.1	0.877	7.010	0.088	11.563
0.2	0.972	6.915	0.183	10.770
0.3	0.979	6.908	0.191	10.032
0.4	0.947	6.940	0.158	9.345
0.5	0.899	6.988	0.110	8.704
0.6	0.845	7.042	0.056	8.108
0.7	0.791	7.096	0.002	7.552
0.8	0.738	7.098	0.000	7.034
0.9	0.689	7.098	0.000	6.552
1	0.642	7.098	0.000	6.103
1.1	0.598	7.098	0.000	5.685
1.2	0.557	7.098	0.000	5.295
1.23	0.545	7.098	0.000	5.183

Table 8. Site-specific model results for the high flow/Dec - April tier, at 3 MGD.

distance (mi)	D.O. Below Mixture's Saturation Value (Deficit) (mg/L)	Stream D.O. Recovery Limited to 90% of Saturation (mg/L)	Decrease from Stream Headwater D.O. (mg/L)	Stream BODu (mg/L)
0	0.682	7.956	0.000	13.264
0.1	0.907	7.932	0.023	12.703
0.2	1.021	7.819	0.137	12.166
0.3	1.069	7.771	0.185	11.651
0.4	1.080	7.760	0.196	11.158
0.5	1.069	7.771	0.185	10.686
0.6	1.046	7.794	0.162	10.233
0.7	1.017	7.823	0.133	9.800
0.8	0.985	7.855	0.101	9.386
0.9	0.952	7.888	0.068	8.988
1	0.918	7.922	0.034	8.608
1.1	0.885	7.955	0.001	8.244
1.2	0.853	7.956	0.000	7.895
1.23	0.844	7.956	0.000	7.793

3.0 AMMONIA

An ammonia limit was developed for the draft permit (see Attachment 7 of Appendix A). This limit, 1.7 mg/L, is applicable to the summer, low-flow tier. Following the same methodology, a winter tier ammonia (as N) value of 5.0 mg/L was calculated, as shown in Appendix B.

4.0 SUMMARY OF REQUESTED PERMIT LIMITS

Requested permit limits, developed as discussed above, are summarized in Table 9. It is recognized that these limits are subsequently used to determine weekly average limits. Nutrient consideration are not addressed in this report.

Table 9. Requested permit limits.

Parameter (mg/L)	Conditions					
	0.999 MGD		2 MGD		3 MGD	
	Low Flow Tier[a] (May-Nov)	High Flow Tier (Dec-Apr)	Low Flow Tier (May-Nov)	High Flow Tier (Dec-Apr)	Low Flow Tier (May-Nov)	High Flow Tier (Dec-Apr)
cBOD5	5	7	5	6	5	6
TKN	3	6	3	5	3	5
Effluent D. O.	6.9	8.0	7.3	7.9	7.3	8.2
Ammonia	1.7	5.0	1.7	5.0	1.7	5.0

[a]As in draft permit (Appendix A)

5.0 REFERENCES

Phillips, M.D., and van Soestbergen, J.G., "Documentation And Users Manual Regional Water Quality Model for Free Flowing Streams, Version 4.11," Virginia DEQ, Office of Water Permit Programs August 31, 2001.

USGS, http://ga2.er.usgs.gov/lowflow/helplowflowstats.cfm, May 9, 2006.

APPENDICES

APPENDIX A. Draft Permit, developed by DEQ on 12/13/2005.

APPENDIX B. Ammonia limit determination for high flow tiers.

APPENDIX A.

Draft Permit, developed by DEQ on 12/13/2005.

CONDITIONS APPLICABLE TO ALL VPDES PERMITS

A. Monitoring

1. Samples and measurements taken as required by this permit shall be representative of the monitored activity.

2. Monitoring shall be conducted according to procedures approved under Title 40 Code of Federal Regulations Part 136 or alternative methods approved by the U.S. Environmental Protection Agency, unless other procedures have been specified in this permit.

3. The permittee shall periodically calibrate and perform maintenance procedures on all monitoring and analytical instrumentation at intervals that will insure accuracy of measurements.

B. Records

1. Records of monitoring information shall include:
   a. The date, exact place, and time of sampling or measurements;
   b. The individual(s) who performed the sampling or measurements;
   c. The date(s) and time(s) analyses were performed;
   d. The individual(s) who performed the analyses;
   e. The analytical techniques or methods used; and
   f. The results of such analyses.

2. Except for records of monitoring information required by this permit related to the permittee's sewage sludge use and disposal activities, which shall be retained for a period of at least five years, the permittee shall retain records of all monitoring information, including all calibration and maintenance records and all original strip chart recordings for continuous monitoring instrumentation, copies of all reports required by this permit, and records of all data used to complete the application for this permit, for a period of at least 3 years from the date of the sample, measurement, report or application. This period of retention shall be extended automatically during the course of any unresolved litigation regarding the regulated activity or regarding control standards applicable to the permittee, or as requested by the Board.

C. Reporting Monitoring Results

1. The permittee shall submit the results of the monitoring required by this permit not later than the 10th day of the month after monitoring takes place, unless another reporting schedule is specified elsewhere in this permit. Monitoring results shall be submitted to:

   DEQ - Piedmont Regional Office
   4949-A Cox Road
   Glen Allen, VA 23060

2. Monitoring results shall be reported on a Discharge Monitoring Report (DMR) or on forms provided, approved, or specified by the Department.

3. If the permittee monitors any pollutant specifically addressed by this permit more frequently than required by this permit using test procedures approved under Title 40 of the Code of Federal Regulations Part 136 or using other test procedures approved by the U.S. Environmental Protection Agency or using procedures specified in this permit, the results of this monitoring shall be included in the calculation and reporting of the data submitted in the DMR or reporting form specified by the Department.

4. Calculations for all limits which require averaging of measurements shall utilize an arithmetic mean unless otherwise specified in this permit.

D. Duty to Provide Information
The permittee shall furnish to the Department, within a reasonable time, any information which the Board may request to determine whether cause exists for modifying, revoking and reissuing, or terminating this permit or to determine compliance with this permit. The Board may require the permittee to furnish, upon request, such plans, specifications, and other pertinent information as may be necessary to determine the effect of the wastes from his discharge on the quality of state waters, or such other information as may be necessary to accomplish the purposes of the State Water Control Law. The permittee shall also furnish to the Department upon request, copies of records required to be kept by this permit.

E. Compliance Schedule Reports
Reports of compliance or noncompliance with, or any progress reports on, interim and final requirements contained in any compliance schedule of this permit shall be submitted no later than 14 days following each schedule date.

F. Unauthorized Discharges
Except in compliance with this permit, or another permit issued by the Board, it shall be unlawful for any person to:

1. Discharge into state waters sewage, industrial wastes, other wastes, or any noxious or deleterious substances; or

2. Otherwise alter the physical, chemical or biological properties of such state waters and make them detrimental to the public health, or to animal or aquatic life, or to the use of such waters for domestic or industrial consumption, or for recreation, or for other uses.

G. Reports of Unauthorized Discharges.
Any permittee who discharges or causes or allows a discharge of sewage, industrial waste, other wastes or any noxious or deleterious substance into or upon state waters in violation of Part II F 1; or who discharges or causes or allows a discharge that may reasonably be expected to enter state waters in violation of Part II F 1, shall notify the Department of the discharge immediately upon discovery of the discharge, but in no case later than 24 hours after said discovery. A written report of the unauthorized discharge shall be submitted to the Department, within five days of discovery of the discharge. The written report shall contain:

1. A description of the nature and location of the discharge;

2. The cause of the discharge;

3. The date on which the discharge occurred;

4. The length of time that the discharge continued;

5. The volume of the discharge;

6. If the discharge is continuing, how long it is expected to continue;

7. If the discharge is continuing, what the expected total volume of the discharge will be; and

8. Any steps planned or taken to reduce, eliminate and prevent a recurrence of the present discharge or any future discharges not authorized by this permit. Discharges reportable to the Department under the immediate reporting requirements of other regulations are exempted from this requirement.

H. Reports of Unusual or Extraordinary Discharges
If any unusual or extraordinary discharge including a bypass or upset should occur from a treatment works and the discharge enters or could be expected to enter state waters, the

permittee shall promptly notify, in no case later than 24 hours, the Department by telephone after the discovery of the discharge. This notification shall provide all available details of the incident, including any adverse affects on aquatic life and the known number of fish killed. The permittee shall reduce the report to writing and shall submit it to the Department within five days of discovery of the discharge in accordance with Part II I 2. Unusual and extraordinary discharges include but are not limited to any discharge resulting from:

1. Unusual spillage of materials resulting directly or indirectly from processing operations;
2. Breakdown of processing or accessory equipment;
3. Failure or taking out of service some or all of the treatment works; and
4. Flooding or other acts of nature.

I. Reports of Noncompliance

The permittee shall report any noncompliance which may adversely affect state waters or may endanger public health.

1. An oral report shall be provided within 24 hours from the time the permittee becomes aware of the circumstances. The following shall be included as information which shall be reported within 24 hours under this paragraph:
   a. Any unanticipated bypass; and
   b. Any upset which causes a discharge to surface waters.
2. A written report shall be submitted within 5 days and shall contain:
   a. A description of the noncompliance and its cause;
   b. The period of noncompliance, including exact dates and times, and if the noncompliance has not been corrected, the anticipated time it is expected to continue; and
   c. Steps taken or planned to reduce, eliminate, and prevent reoccurrence of the noncompliance.

   The Board may waive the written report on a case-by-case basis for reports of noncompliance under Part II I. if the oral report has been received within 24 hours and no adverse impact on state waters has been reported.
3. The permittee shall report all instances of noncompliance not reported under Parts II I.1 or 2, in writing, at the time the next monitoring reports are submitted. The reports shall contain the information listed in Part II I.2.

NOTE: The immediate (within 24 hours) reports required in Parts II G, H and I may be made to the Department's Regional Office at (804) 527-5020 or fax (804) 527-5106. For reports outside normal working hours, leave a message and this shall fulfill the immediate reporting requirement. For emergencies, the Virginia Department of Emergency Services maintains a 24 hour telephone service at 1-800-468-8892.

J. Notice of Planned Changes

1. The permittee shall give notice to the Department as soon as possible of any planned physical alterations or additions to the permitted facility. Notice is required only when:
   a. The permittee plans alteration or addition to any building, structure, facility, or installation from which there is or may be a discharge of pollutants, the construction of which commenced:
      (1) After promulgation of standards of performance under Section 306 of Clean Water Act which are applicable to such source; or
      (2) After proposal of standards of performance in accordance with Section

306 of Clean Water Act which are applicable to such source, but only if the standards are promulgated in accordance with Section 306 within 120 days of their proposal;

b. The alteration or addition could significantly change the nature or increase the quantity of pollutants discharged. This notification applies to pollutants which are subject neither to effluent limitations nor to notification requirements specified elsewhere in this permit; or

c. The alteration or addition results in a significant change in the permittee's sludge use or disposal practices, and such alteration, addition, or change may justify the application of permit conditions that are different from or absent in the existing permit, including notification of additional use or disposal sites not reported during the permit application process or not reported pursuant to an approved land application plan.

2. The permittee shall give advance notice to the Department of any planned changes in the permitted facility or activity which may result in noncompliance with permit requirements.

K. Signatory Requirements

1. Applications. All permit applications shall be signed as follows:

a. For a corporation: by a responsible corporate officer. For the purpose of this section, a responsible corporate officer means: (i) A president, secretary, treasurer, or vice-president of the corporation in charge of a principal business function, or any other person who performs similar policy- or decision-making functions for the corporation, or (ii) the manager of one or more manufacturing, production, or operating facilities, provided the manager is authorized to make management decisions which govern the operation of the regulated facility including having the explicit or implicit duty of making major capital investment recommendations, and initiating and directing other comprehensive measures to assure long term environmental compliance with environmental laws and regulation; the manager can ensure that the necessary systems are established or actions taken to gather complete and accurate information for permit application requirements; and where authority to sign documents has been assigned or delegated to the manager in accordance with corporate procedures;

b. For a partnership or sole proprietorship: by a general partner or the proprietor, respectively; or

c. For a municipality, state, federal, or other public agency: By either a principal executive officer or ranking elected official. For purposes of this section, a principal executive officer of a federal agency includes: (i) The chief executive officer of the agency, or (ii) a senior executive officer having responsibility for the overall operations of a principal geographic unit of the agency.

2. Reports, etc. All reports required by permits, and other information requested by the Board shall be signed by a person described in Part II K 1, or by a duly authorized representative of that person. A person is a duly authorized representative only if:

a. The authorization is made in writing by a person described in Part II K 1;

b. The authorization specifies either an individual or a position having responsibility for the overall operation of the regulated facility or activity such as the position of plant manager, operator of a well or a well field, superintendent, position of equivalent responsibility, or an individual or position having overall responsibility for environmental matters for the company. (A duly authorized representative

noncompliance.

P. Oil and Hazardous Substance Liability
Nothing in this permit shall be construed to preclude the institution of any legal action or relieve the permittee from any responsibilities, liabilities, or penalties to which the permittee is or may be subject under Sections 62.1-44.34:14 through 62.1-44.34:23 of the State Water Control Law.

Q. Proper Operation and Maintenance
The permittee shall at all times properly operate and maintain all facilities and systems of treatment and control (and related appurtenances) which are installed or used by the permittee to achieve compliance with the conditions of this permit. Proper operation and maintenance also includes effective plant performance, adequate funding, adequate licensed operator staffing, and adequate laboratory and process controls, including appropriate quality assurance procedures. This provision requires the operation of back-up or auxiliary facilities or similar systems which are installed by the permittee only when the operation is necessary to achieve compliance with the conditions of this permit.

R. Disposal of Solids or Sludges
Solids, sludges or other pollutants removed in the course of treatment or management of pollutants shall be disposed of in a manner so as to prevent any pollutant from such materials from entering state waters.

S. Duty to Mitigate
The permittee shall take all reasonable steps to minimize or prevent any discharge or sludge use or disposal in violation of this permit which has a reasonable likelihood of adversely affecting human health or the environment.

T. Need to Halt or Reduce Activity Not a Defense
It shall not be a defense for a permittee in an enforcement action that it would have been necessary to halt or reduce the permitted activity in order to maintain compliance with the conditions of this permit.

U. Bypass
1. "Bypass" means the intentional diversion of waste streams from any portion of a treatment facility. The permittee may allow any bypass to occur which does not cause effluent limits to be exceeded, but only if it also is for essential maintenance to assure efficient operation. These bypasses are not subject to the provisions of Parts II U 2 and U 3.

2. Notice
   a. Anticipated bypass. If the permittee knows in advance of the need for a bypass, prior notice shall be submitted, if possible at least ten days before the date of the bypass.
   b. Unanticipated bypass. The permittee shall submit notice of an unanticipated bypass as required in Part II I.

3. Prohibition of bypass.
   a. Bypass is prohibited, and the Board may take enforcement action against a permittee for bypass, unless:
      (1) Bypass was unavoidable to prevent loss of life, personal injury, or severe property damage;
      (2) There were no feasible alternatives to the bypass, such as the use of auxiliary treatment facilities, retention of untreated wastes, or maintenance during normal periods of equipment downtime. This condition is not satisfied if adequate back-up equipment should have been installed in the exercise of reasonable engineering judgment to

prevent a bypass which occurred during normal periods of equipment downtime or preventive maintenance; and

(3) The permittee submitted notices as required under Part II U 2.

b. The Board may approve an anticipated bypass, after considering its adverse effects, if the Board determines that it will meet the three conditions listed above in Part II U 3 a.

V. Upset

1. An upset constitutes an affirmative defense to an action brought for noncompliance with technology based permit effluent limits if the requirements of Part II V 2 are met. A determination made during administrative review of claims that noncompliance was caused by upset, and before an action for noncompliance, is not a final administrative action subject to judicial review.

2. A permittee who wishes to establish the affirmative defense of upset shall demonstrate, through properly signed, contemporaneous operating logs, or other relevant evidence that:
   a. An upset occurred and that the permittee can identify the cause(s) of the upset;
   b. The permitted facility was at the time being properly operated; and
   c. The permittee submitted notice of the upset as required in Part II I 2.
   d. The permittee complied with any remedial measures required under Part II S.

3. In any enforcement proceeding the permittee seeking to establish the occurrence of an upset has the burden of proof.

W. Inspection and Entry

The permittee shall allow the Director, or an authorized representative, upon presentation of credentials and other documents as may be required by law, to:

1. Enter upon the permittee's premises where a regulated facility or activity is located or conducted, or where records must be kept under the conditions of this permit;

2. Have access to and copy, at reasonable times, any records that must be kept under the conditions of this permit;

3. Inspect at reasonable times any facilities, equipment (including monitoring and control equipment), practices, or operations regulated or required under this permit; and

4. Sample or monitor at reasonable times, for the purposes of assuring permit compliance or as otherwise authorized by the Clean Water Act and the State Water Control Law, any substances or parameters at any location.

For purposes of this section, the time for inspection shall be deemed reasonable during regular business hours, and whenever the facility is discharging. Nothing contained herein shall make an inspection time unreasonable during an emergency.

X. Permit Actions

Permits may be modified, revoked and reissued, or terminated for cause. The filing of a request by the permittee for a permit modification, revocation and reissuance, or termination, or a notification of planned changes or anticipated noncompliance does not stay any permit condition.

Y. Transfer of Permits

1. Permits are not transferable to any person except after notice to the Department. Except as provided in Part II Y 2, a permit may be transferred by the permittee to a new owner or operator only if the permit has been modified or revoked and reissued, or a minor

modification made, to identify the new permittee and incorporate such other requirements as may be necessary under the State Water Control Law and the Clean Water Act.

2. As an alternative to transfers under Part II Y 1, this permit may be automatically transferred to a new permittee if:
   a. The current permittee notifies the Department at least 30 days in advance of the proposed transfer of the title to the facility or property;
   b. The notice includes a written agreement between the existing and new permittees containing a specific date for transfer of permit responsibility, coverage, and liability between them; and
   c. The Board does not notify the existing permittee and the proposed new permittee of its intent to modify or revoke and reissue the permit. If this notice is not received, the transfer is effective on the date specified in the agreement mentioned in Part II Y 2 b.

Z. Severability
The provisions of this permit are severable, and if any provision of this permit or the application of any provision of this permit to any circumstance, is held invalid, the application of such provision to other circumstances, and the remainder of this permit, shall not be affected thereby.

VPDES PERMIT FACT SHEET

This document gives pertinent information concerning the issuance of the VPDES permit listed below. This permit is being processed as a minor, municipal permit. The effluent limitations contained in this permit will maintain the Water Quality Standards of 9 VAC 25-260-05 et seq. The proposed discharge will result from the operation of a municipal wastewater treatment plant. This permit action includes the issuance of a new VPDES Permit with effluent limitations and special conditions.

1. Facility Name and Address: Amelia Courthouse Sanitary District STP
County of Amelia
Post Office Box A
Amelia, Virginia 23002

Location: Intersection of Smacks Creek and Route 627

2. Permit No. VA0091707 Permit Expiration Date: NA

3. Owner Contact: Philip Vannoorbeeck, County Administrator
Telephone No.: (804) 561-3039

4. Application Complete Date: June 24, 2005
Permit Drafted By: Jarad L. Morton Date: 12/13/2005
DEQ Regional Office: Piedmont
Reviewed By: Date:

5. Receiving Stream Name: Smacks Creek
Basin: James River (Middle)
Subbasin: Appomattox
Section: 5c
Class: III – Nontidal Waters (Coastal and Piedmont)
Special Standards: None
7Q10: 0.039 MGD
1Q10: 0.032 MGD
30Q10: 0.084 MGD
30Q5: 0.15 MGD
Harmonic Mean: None
Tidal? No On 303(d) list? No

See Flow Frequency Memo of September 9, 2005, **Attachment 1**

6. Operator License Requirements: Class II

7. Reliability Class: Class II

8. Permit Characterization: (Check as many as appropriate)

(X) Issuance
( ) Reissuance
( ) Revoke & Reissue
( ) Owner Modification
( ) Board Modification
( ) Change of Ownership/Name
Effective Date:
(X) Municipal
SIC Code(s): 4952
( ) Industrial
SIC Code(s):
(X) POTW
( ) PVOTW
( ) Private

( ) Existing Discharge
(X) Proposed Discharge
(X) Effluent Limited
(X) Water Quality Limited
( ) WET Limit
( ) Interim Limits in Permit
( ) Interim Limits in Other Document (attached)
( ) Compliance Schedule Required
( ) Site Specific WQ Criteria
( ) Variance to WQ Standards
( ) Water Effects Ratio
( ) Discharge to 303(d) Listed Segment
( ) Toxics Management Program Required
( ) Toxics Reduction Evaluation

( ) Federal
( ) State
( ) Possible Interstate Effect
( ) Storm Water Management Plan

9. Wastewater Flow and Treatment: Table 1

Outfall Number	Wastewater Source	Treatment	Flow
001	A proposed residential population of 5000 as well as commercial development	Grit Removal Unit, Mechanical Screen, Aeration, Anoxic Tank, , Clarifier, Filters, UV, Post Air; for sludge: Extended – Air Activated Sludge Process, Aerobic Digesters, Belt Press	0.999 MGD design capacity

See **Attachment 2** for facility diagrams.

10. Sludge Disposal: Dewatered sludge solids will be trucked to the Maplewood Recycling and Waste Disposal Landfill weekdays between the hours of 8AM and 4PM. See **Attachment 3** for proposed haul route.

11. Discharge Location Description: This facility discharges to Smacks Creek.
Name of USGS topo map: Amelia Courthouse (101C) **(See Attachment 4)**

12. Material Storage: This is a proposed facility; material storage information is not available at this time.

13. Ambient Water Quality Information: Ambient water quality data is compiled from station 2-SMK002.57, located approximately 4 miles downstream of the proposed discharge. This monitoring station was selected upon the advice of J.V. Palmore, Senior Environmental Planner, DEQ Piedmont Regional Office. See **Attachment 5** for this data.

14. Antidegradation Review and Comments:

The State Water Control Board's Water Quality Standards includes an antidegradation policy (9 VAC 25-260-30). All state surface waters are provided one of three levels of antidegradation protection. For Tier 1 or existing use protection, existing uses of the water body and the water quality to protect those uses must be maintained. Tier 2 water bodies have water quality that is better than the water quality standards. Significant lowering of the water quality of Tier 2 waters is not allowed without an evaluation of the economic and social impacts. Tier 3 water bodies are exceptional waters and are so designated by regulatory amendment. The antidegradation policy prohibits new or expanded discharges into exceptional waters.

The antidegradation review begins with a Tier determination. The receiving stream, Smacks Creek, is determined to be a Tier 2 waterbody. This determination is the result of an analysis of the ambient stream data that shows a water quality better than water quality standards. The average dissolved oxygen and pH concentrations are 9.94 mg/l and 6.98 S.U., respectively, with no pH values outside the range of 6.0 and 9.0 S.U. This waterbody is not included on the 303D list of impaired waters.

15. Site Inspection: October 6, 2005, by Jarad Morton and Jennifer Palmore. The visit was conducted in conjunction with the stream assessment used in Jennifer Palmore's Stream Sanitation Analysis. The approximate location of the proposed outfall was observed and no obvious issues were detected.

16. Effluent Screening & Limitation Development:

See **Attachment 6** for Jennifer Palmore's Stream Sanitation Analysis for the proposed facility. This analysis is the basis for $cBOD_5$, TKN, and DO limitations.

Ammonia:
See the analysis of ammonia in **Attachment 7**. Ammonia was analyzed using MIX.exe, MSTRANTI, and STATS.exe. Stream flow and characteristic parameters used for inputs into the MIX.exe application are derived from a combination of Jennifer Palmore's Stream Sanitation Analysis and Flow Frequency Determination, and the Site Inspection of 10/6/2005.

Inputs for MSTRANTI are listed on the MSTRANTI print-out in Attachment 7. Note that both the 90% and the 10% Maximum pH inputs are listed as 7.5. The application listed a pH min of 6 and a max of 9. The input of 7.5 is used because it is the average of the provided min and max, and appears representative of similar discharges from similar facilities by comparison.

Using the waste load allocations provided by MSTRANTI, a QL of 0.20 mg/l and a single data point of 9, it was determined that an Ammonia limit of 1.7 mg/l is needed in order to maintain water quality standards in Smacks Creek.

Nutrients:
During the 2005 General Assembly, the State of Virginia passed The Chesapeake Bay Watershed Nutrient Credit Exchange Program law. Section 62.1-44.19:14 of that law mandates the issuance of a Watershed General Permit (WGP) at a later date which will set concentration and loading limits for Nitrogen (N) and Phosphorus (P) for all Chesapeake Bay Significant Dischargers (once constructed, this facility will be considered a significant discharger).

Nutrient limitations and monitoring are developed per 9 VAC 25-270 and Guidance Memo 05-2009. Per 9 VAC 25-270, this facility has a total nitrogen and total phosphorus allocation of zero. This facility is required to offset 100% of the total nitrogen and total phosphorus discharged. The facility will only be allowed to obtain nutrient reduction credits for Total Nitrogen and Total Phosphorus if they obtain an annual average concentration of 3.00 mg/l for Total Nitrogen and 0.30 mg/l for Total Phosphorus.

Table 2.A: Effluent Limitations

PARAMETER	BASIS FOR LIMITS	DISCHARGE LIMITS						MONITORING REQUIREMENTS	
		MONTHLY AVG		WEEKLY AVG		MINIMUM	MAX	FREQ	SAMP TYPE
		mg/l	kg/d	mg/l	kg/d				
Flow	NA	NL – monitoring only				NA	NL	Continuous	Totalizing Indicating & Recording
pH	1	NA		NA		6.0 su	9.0 su	1/day	Grab
E.coli (N/100 ml)*	1	126		NA		NA	NA	2/month Between 10AM and 4PM	Grab
Ammonia (As N)	1	11 mg/l		11 mg/l		NA	NA	1/month	Grab
$CBOD_5$	2	5	19	7.5	28	NA	NA	3 days/week	8 HC
TSS	3	30.0	113	45.0	170	NA	NA	1/month	8 HC
TKN	2	3.0	11	4.5	17	NA	NA	3 days/week	8 HC
DO	2	NA		NA		6.9 mg/L	NA	1/day	Grab

Table 2.B: Effluent Limitations (Nutrients)

PARAMETER	BASIS FOR LIMITS	DISCHARGE LIMITS						MONITORING REQUIREMENTS	
		MONTHLY AVG.		WEEKLY AVG.	MINIMUM	MAXIMUM		FREQ	SAMPLE TYPE
		mg/l	kg/d			mg/l	kg/d		
Total Phosphorus	5	NL		NA	NA	NA	NL	2/month	8 HC
Total Phosphorus, Annual Average	4, 5, 6	0.30	NA	NA	NA	NA		1/year	Calculated
Total Phosphorus – Monthly (kg/month)	5	NA		NA	NA	NA	NL	1/month	Calculated
Total Phosphorus – Year to date (kg/year)	5	NA		NA	NA	NA	NL	1/month	Calculated
Total Phosphorus – Calendar Year (kg/year)	5	NA		NA	NA	NA	ZERO	1/year	Calculated

Table 2.B: Effluent Limitations (Nutrients), Continued

PARAMETER	BASIS FOR LIMITS	DISCHARGE LIMITS						MONITORING REQUIREMENTS	
		MONTHLY AVG.		WEEKLY AVG.	MINIMUM	MAXIMUM		FREQ	SAMPLE TYPE
		mg/l	kg/d			mg/l	kg/d		
Orthophosphate	5	NL		NA	NA	NA		2/month	8 HC
Nitrate plus Nitrite (as N)	5	NL		NA	NA	NA		2/month	8 HC
Total Nitrogen (as N)	5	NL		NA	NA	NA		2/month	Calculated
Total Nitrogen (as N), Annual Average	4, 5, 6	3.00	NA	NA	NA	NA		1/year	Calculated
Total Nitrogen – Monthly (kg/month)	5	NA		NA	NA	NA	NL	1/month	Calculated
Total Nitrogen – Year to Date (kg/year)	5	NA		NA	NA	NA	NL	1/month	Calculated
Total Nitrogen – Calendar Year (kg/year)	5	NA		NA	NA	NA	ZERO	1/year	Calculated

*Geometric Mean

1. Water Quality-based Limits
2. Stream Sanitation Analysis for Smacks Creek, 10/12/2005
3. Federal Effluent Guidelines
4. State Water Control Board Nutrient Policy
5. Guidance Memo 05-2009
6. Nutrient General Permit Legislation

17. Basis for Sludge Use & Disposal Requirements: This facility will dispose of dewatered sludge via landfill per the VPDES Sewage Sludge Application Form submitted as part of the application for this permit.

18. Antibacksliding: NA

19. Compliance Schedules : NA

20. Special Conditions – Part I.B:

a. **B.1 – 95% Capacity Reopener**
Rationale: Required by VPDES Permit Regulation, 9 VAC 25-31-200 B 2 for all POTW and PVOTW permits.

b. **B.2 – Indirect Dischargers**
Rationale: Required by VPDES Permit Regulation, 9 VAC 25-31-200 B 1 for POTWs and PVOTWs that receive waste from someone other than the owner of the treatment works.

c. **B. 3 – CTC, CTO Requirement**
Rationale: Required by Code of Virginia § 62.1-44.19; Sewage Collection and Treatment Regulations, 9 VAC 25-790.

d. **B.4 – O&M Manual Requirement**
Rationale: Required by Code of Virginia § 62.1-44.19; Sewage Collection and Treatment Regulations, 9 VAC 25-790; VPDES Permit Regulation, 9 VAC 25-31-190 E.

e. **B.5 – Materials Handling/Storage**
Rationale: 9 VAC 25-31-50 A prohibits the discharge of any wastes into State waters unless authorized by permit. Code of Virginia § 62.1-44.16 and 62.1-44.17 authorizes the Board to regulate the discharge of industrial waste or other waste.

f. **B.6 – Licensed Operator Requirement**
Rationale: The VPDES Permit Regulation, 9 VAC 25-31-200 D and the Code of Virginia § 54.1-2300 et seq., Rules and Regulations for Waterworks and Wastewater Works Operators (18 VAC 160-20-10 et seq.), require licensure of operators.

g. **B.7 – Reliability Class**
Rationale: Required by Sewage Collection and Treatment Regulations, 9 VAC 25-790 for all municipal facilities.

h. **B.8 – Water Quality Criteria Monitoring**
Rationale: VPDES Permit Regulation, 9 VAC 25-31-220 D requires effluent limitations to be established which will contribute to the attainment or maintenance of water quality criteria.

i. **B.9 – Sludge Use and Disposal**
Rationale: VPDES Permit Regulation, 9 VAC 25-31-100 P, 220 B 2, and 420 through 720; and 40 CFR Part 503 require all treatment works treating domestic sewage to submit information on sludge use and disposal practices and to meet specified standards for sludge use and disposal. Technical requirements may be derived from the Department of Health's Biosolids Use Regulations, 12 VAC 5-585-10 et seq.

j. **B.10 – Sludge Reopener**
Rationale: Required by VPDES Permit Regulation, 9 VAC 25-31-220 C 4 for all permits issued to treatment works treating domestic sewage.

k. **B.11 – Compliance Reporting**
Rationale: Authorized by VPDES Permit Regulation, 9 VAC 25-31-190 J 4 and 220 I. This condition is necessary when pollutants are monitored by the permittee and a maximum level of quantification and/or a specific analytical method is required in order to assess compliance with a permit limitation or to compare effluent quality with a numeric criterion. The condition also establishes protocols for calculation of reported values. Significant digits guidance (Part d.) was added in response to Guidance Memorandum 04-2020.

l. **B.12 – Section 303(d) List (TMDL) Reopener**
Rationale: Section 303(d) of the Clean Water Act requires that total maximum daily loads (TMDLs) be developed for streams listed as impaired. This special condition is to allow the permit to be reopened if necessary to bring it into compliance with any applicable TMDL approved for the receiving stream. The re-opener recognizes that, according to section 402(o)(1) of the Clean Water Act, limits and/or conditions may be either more or less stringent than those contained in this permit. Specifically, they can be relaxed it they are the result of a TMDL, basin plan, or other wasteload allocation prepared under section 303 of the Act.

m. **B.13 – Chesapeake Bay Nutrients Reopener**
Rationale: The Regulation for Nutrient Enriched Waters and Dischargers within the Chesapeake Bay Watershed, 9 VAC 25-40-10 et seq. allows reopening of permits for discharges into waters designated as nutrient enriched if total phosphorus and total nitrogen in a discharge potentially exceed specified concentrations. The policy anticipates that future total phosphorus and total nitrogen limits may be needed.

n. **B.14 – Nutrient Reporting**
Rationale: Guidance Memorandum 05-2009 implements DEQ's best professional judgment decision to limit nutrient loadings from facilities listed on the Chesapeake Bay Program Significant Discharger List. The memorandum provides the basis for this decision and specifies the procedure for determining annual effluent limitations for these parameters for each affected facility.

o. **B.15 – Nutrient Reduction Credits**
Rationale: Code of Virginia, Chapter 3.1, and Article 4.02 of the General Permit Regulation provides for the control of total nitrogen and total phosphorus from point source dischargers. Credits are obtained for nutrient removal and may be traded or sold.

p. **B.16 – General Permit Clause**
Rationale: The Virginia General Assembly, in the 2005 session, enacted a new Article 4.02 (Chesapeake Bay Watershed Nutrient Credit Exchange Program) to the Code of Virginia to address nutrient loads to the Bay. Section 62.1-44.19:14 of the law requires the development of a watershed general permit that authorizes point source discharges of total nitrogen and total phosphorus and provides for the control of those nutrients in lieu of the individual VPDES permits, unless the individual permits contain more restrictive limits that are necessary to protect local water quality. That section of the law also sets forth various items to be contained within the general permit. Section 62.1-44.19:15 sets forth the requirements for new and expanded dischargers which are captured by the requirements of the law.

q. **B.17 – Pretreatment Requirements**
Rationale: VPDES Permit Regulation, 9 VAC 25-31-730 through 900, and 40 CFR part 403 require certain existing and new sources of pollution to meet specified regulations.

21. Part II, Conditions Applicable to All VPDES Permits
The VPDES Permit Regulation at 9 VAC 25-31-190 requires all VPDES permits to contain or specifically cite the conditions listed.

22. Changes to Current Permit: NA, New Issuance

23. Variances/Alternate Limits or Conditions: None.

24. Public Notice Information required by 9 VAC 25-31-280 B:

Comment period: Start Date: _____ End Date: _____

All pertinent information is on file and may be inspected or copied by contacting Gina Kelly at:

Virginia Department of Environmental Quality (DEQ)
Piedmont Regional Office
4949-A Cox Road
Glen Allen, Virginia 23060-6296

Telephone Number 804/527-5004
Facsimile Number 804/527-5106
Email jlmorton@deq.virginia.gov

Persons may comment in writing or by e-mail to the DEQ on the proposed reissuance of the permit, and may request a public hearing, during the comment period. Comments shall include the name, address, and telephone number of the writer, and shall contain a complete, concise statement of the factual basis for comments. Only those comments received within the comment period will be considered. The DEQ may decide to hold a public hearing if public response is significant. Requests for public hearings shall state the reason why a hearing is requested, the nature of the issues proposed to be raised in the public hearing, and a brief explanation of how the requester's interests would be directly and adversely affected by the proposed permit action.

Following the comment period, the Board will make a determination regarding the proposed reissuance. That determination will become effective, unless the DEQ grants a public hearing. Due notice of any public hearing will be given.

25. Additional Comments:

a. Previous Board Action: None.

b. Staff Comments:

- Financial assurance does not apply to this facility as it is municipally owned.
- Reliability Class recommendation made by John Capito, P.E., Engineering Field Director, VDH
- All areas within a 10-mile radius of the proposed outfall were screened to ensure that the discharge from the proposed facility does not pose an impact to State and Federally listed threatened and endangered species. The results of a query conducted using the Virginia Department of Game and Inland Fisheries' *Virginia Fish and Wildlife Information Services* did not confirm an impact. The query can be found in **Attachment 8**.

c. Public Comment:

26. Summary of attachments to this Fact Sheet:

Attachment 1	Flow Frequency Memo
Attachment 2	Facility Diagram
Attachment 3	Sludge Disposal Haul Route
Attachment 4	Outfall Location Map
Attachment 5	Ambient Stream Data
Attachment 6	Stream Sanitation Analysis
Attachment 7	Ammonia Analysis
Attachment 8	Threatened and Endangered Species Query

Attachment 1

Flow Frequency Request Memo

MEMORANDUM

DEPARTMENT OF ENVIRONMENTAL QUALITY
Piedmont Regional Office
4949-A Cox Road Glen Allen, Virginia 23060

SUBJECT: Flow Frequency Determination
Proposed Amelia Courthouse STP – VA0091707

TO: Jarad Morton

FROM: Jennifer V. Palmore

DATE: September 9, 2005

COPIES: Modeling File

The Amelia County Sanitation District has applied for a new wastewater treatment plant discharge to Smacks Creek near Amelia Courthouse, VA. Stream flow frequencies are needed for use in developing water quality models and toxic effluent limitations for the VPDES permit.

According to records, the only streamflow measurements that have been collected in VAP-J10R were taken on the Appomattox River and are not comparable for use in this analysis. However, the DEQ conducted fifteen flow measurements on Nibbs Creek in an adjacent watershed from 1996 to 2003. The measurements were made above the confluence with Courthouse Branch near Amelia Courthouse. The measurements were correlated with the same day daily mean values from the continuous record gage on Deep Creek near Mannboro, VA (#02041000). The measurements and daily mean values were plotted on a logarithmic graph and a best fit power trend line was plotted through the data points. The required flow frequencies from the reference gage were plugged into the equation for the regression line and the associated flow frequencies at the measurement site on Nibbs Creek were calculated. Drainage area proportion was then used to calculate the flow frequencies on Smacks Creek at the discharge point. The data for the reference gage, measurement site, and discharge point are presented below and the regression analysis is attached.

Deep Creek near Mannboro, VA (#02041000)
Drainage Area = 158 mi^2
Period of Record = 1947-2003

1Q30 = 0.21 cfs	High Flow 1Q10 = 25 cfs
1Q10 = 0.80 cfs	High Flow 7Q10 = 29 cfs
7Q10 = 1.0 cfs	High Flow 30Q10 = 46 cfs
30Q10 = 2.8 cfs	HM = None
30Q5 = 5.3 cfs	

Nibbs Creek above Courthouse Branch at Amelia Courthouse, VA (#02040590)
Drainage Area = 17.81 mi^2

1Q30 = 0.04 cfs	High Flow 1Q10 = 2.39 cfs
1Q10 = 0.13 cfs	High Flow 7Q10 = 2.72 cfs
7Q10 = 0.15 cfs	High Flow 30Q10 = 4.03 cfs
30Q10 = 0.37 cfs	HM = None
30Q5 = 0.64 cfs	

Smacks Creek at discharge point

Drainage Area = 6.40 mi^2

1Q30 = 0.01 cfs	High Flow 1Q10 = 0.86 cfs
1Q10 = 0.05 cfs	High Flow 7Q10 = 0.98 cfs
7Q10 = 0.06 cfs	High Flow 30Q10 = 1.45 cfs
30Q10 = 0.13 cfs	HM = None
30Q5 = 0.23 cfs	

The high flow months are December through April. The values at the discharge point were determined by drainage area proportions and do not address any withdrawals, discharges, or springs.

If you have any questions about this analysis or need any additional information, please let me know.

Nibbs Creek above Courthouse Branch near Amelia Courthouse, Va. (#02[illegible]0590)
vs Deep Creek near Mannboro, VA (#02041000)

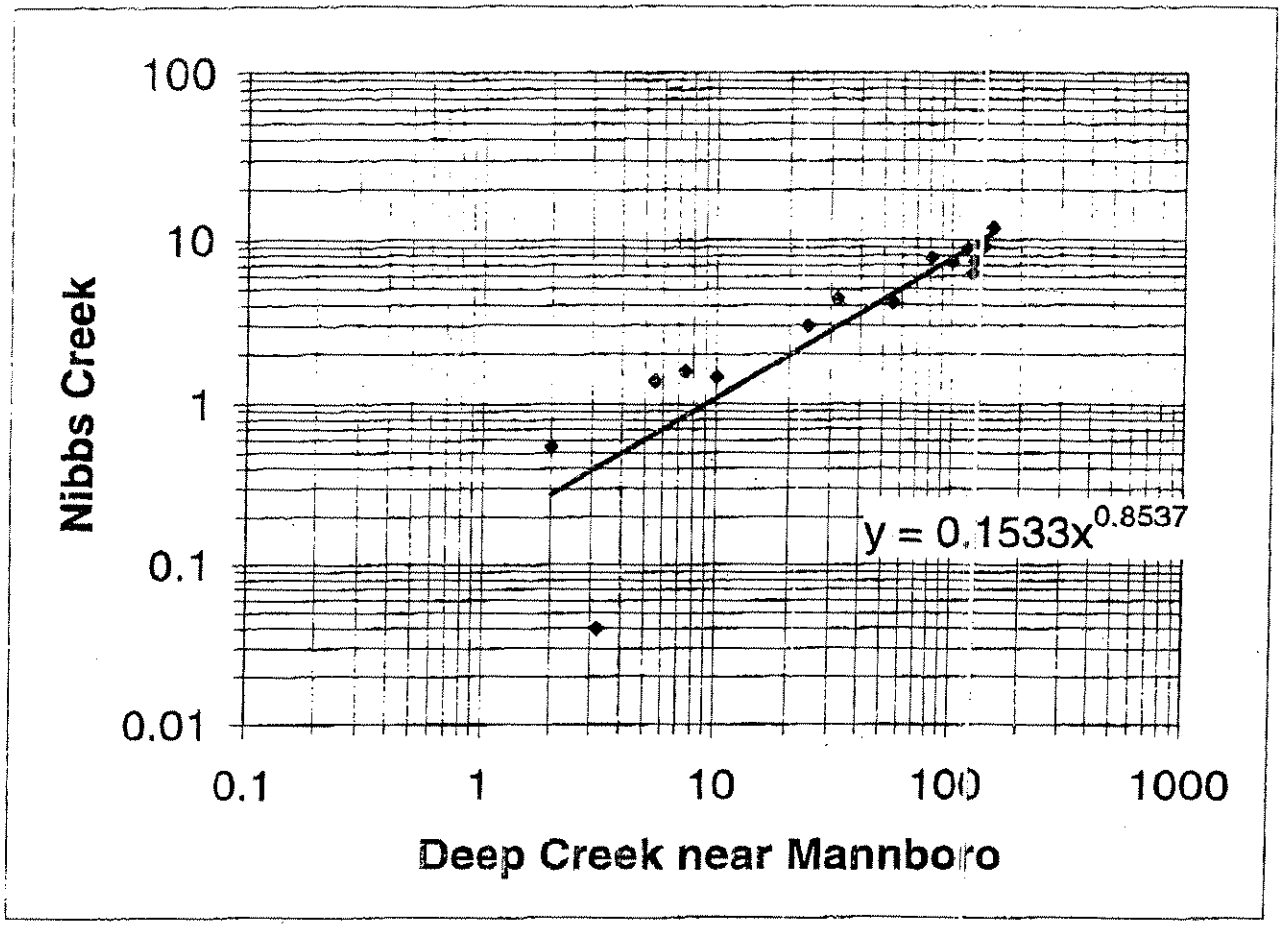

Flow Data (cfs)

Date	Deep	Nibbs
10/15/1996	100	7.39
5/18/1997	81	7.81
10/7/1997	5.5	1.38
9/14/1998	2	0.55
9/23/1998	7.4	1.58
5/13/1999	24	3.00
6/8/1999	10	1.46
8/10/1999	3.2	0.04
5/10/2000	55	4.14
5/10/2001	32	4.36
1/10/2003	122	6.25
3/19/2003	124	7.46
6/25/2003	137	9.15
10/2/2003	116	9.02
11/25/2003	150	11.80

SUMMARY OUTPUT

Regression Statistics	
Multiple R	0.953434
R Square	0.909036
Adjusted R Square	0.902039
Standard Error	1.146066
Observations	15

Flow Frequencies (cfs)

Deep		Nibbs	Sm
0.21	1Q30	0.04	0.
0.80	1Q10	0.13	0.
1.0	7Q10	0.15	0.
2.8	30Q10	0.37	0.
5.3	30Q5	0.64	0.
25	HF 1Q10	2.39	0.
29	HF 7Q10	2.72	0.
46	HF30Q10	4.03	1.
None	HM	None	N
	Ann Avg		
158	DA	17.81	6.
	Dec-Apr		
	Period 1947-2003		

Attachment 2

Facility Diagram

Proposed Amelia STP Flow Schematic

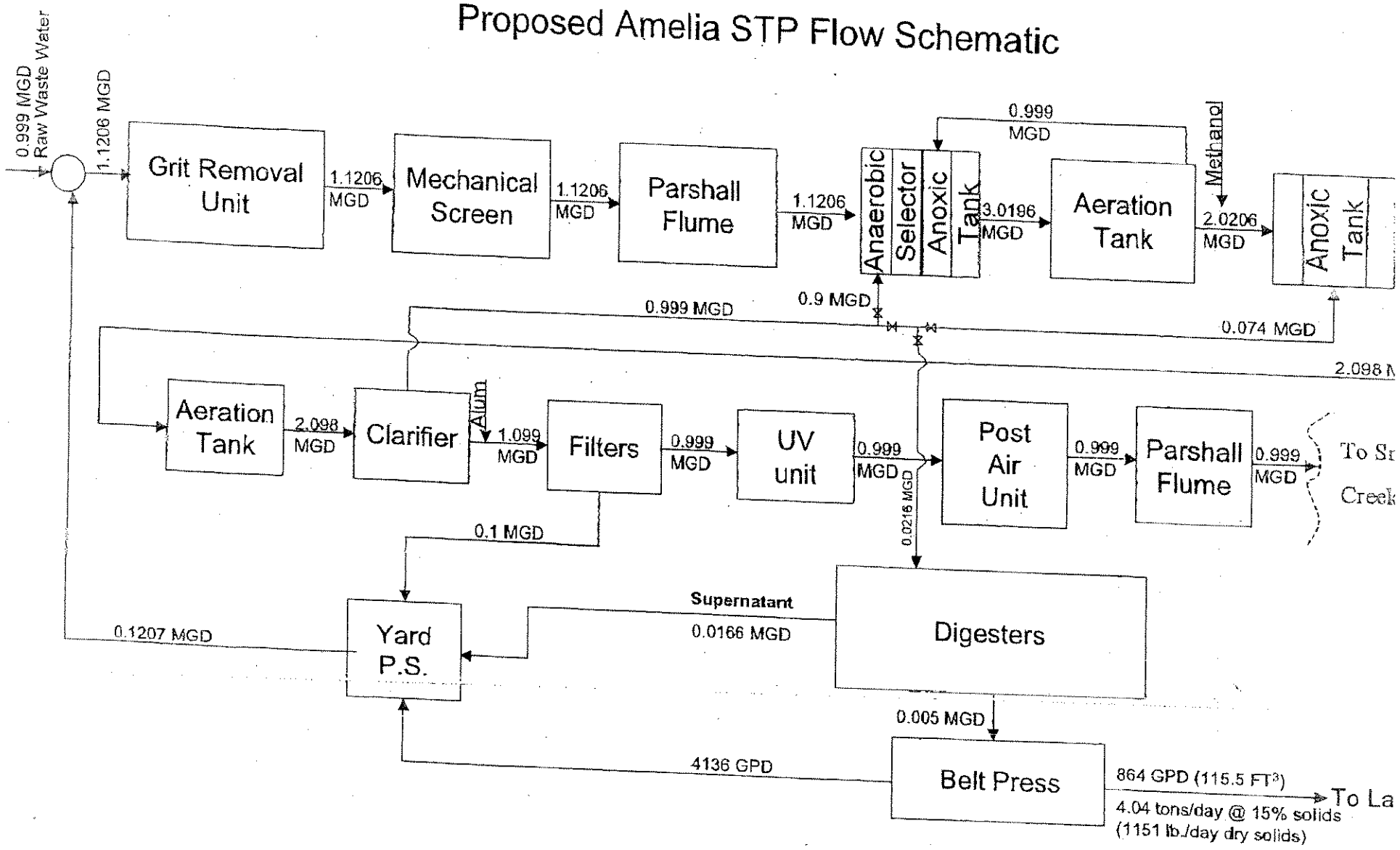

Attachment 3

Sludge Disposal Haul Route

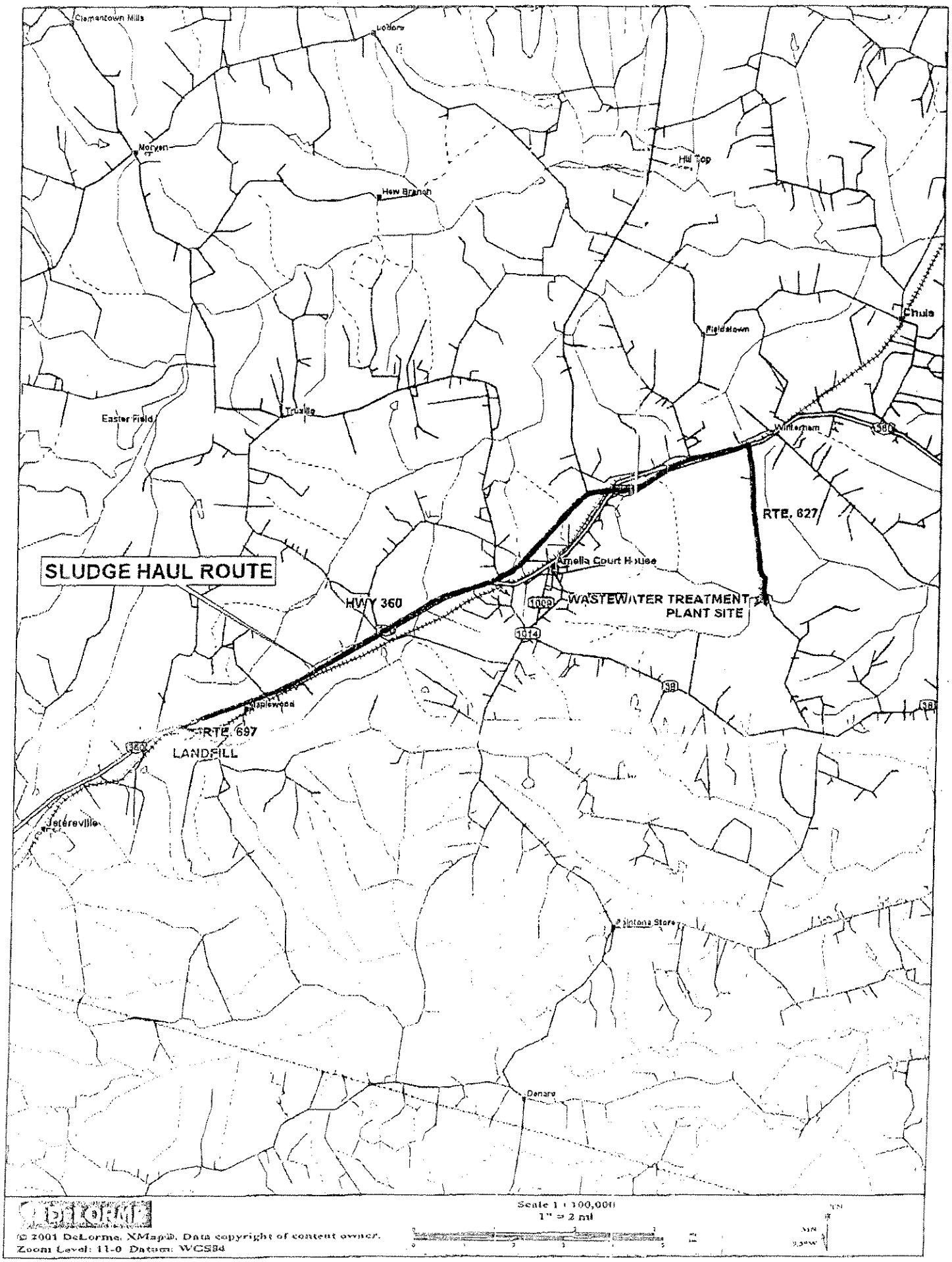

Clementown Mills
Lodore
Moryen
Hill Top
New Branch
Chula
Fieldstown
Easter Field
Truxillo
Winterham
360
RTE. 627
SLUDGE HAUL ROUTE
Amelia Court House
HWY 360
1009
WASTEWATER TREATMENT
PLANT SITE
1014
38
Maplewood
RTE. 697
LANDFILL
360
Jetereville
Paintona Store
Denaro
DELORME
Scale 1 : 100,000
1" = 2 mi
© 2001 DeLorme. XMap®. Data copyright of content owner.
Zoom Level: 11-0 Datum: WGS84

Attachment 4

Outfall Location Map

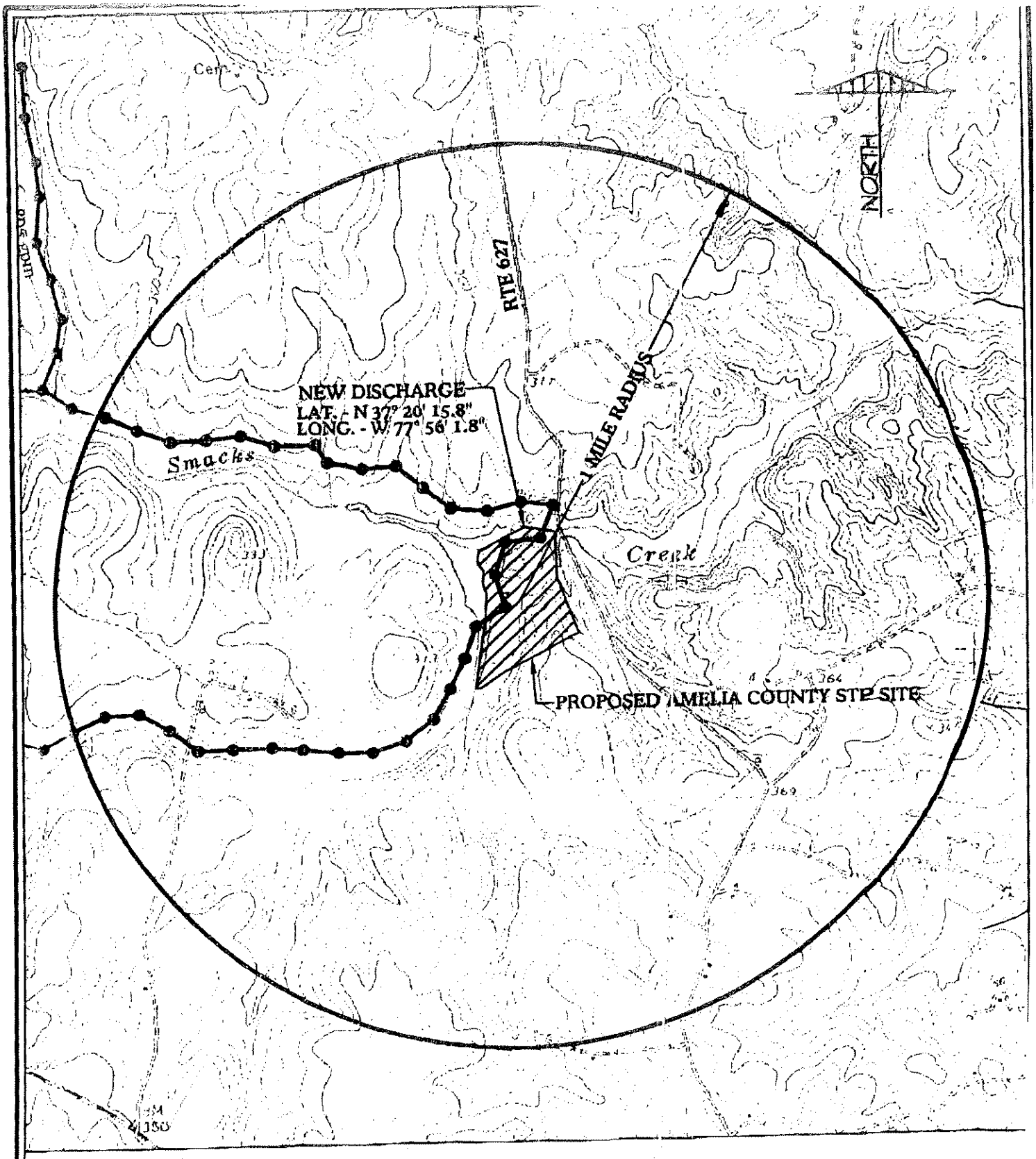

VICINITY MAP

USGS QUADRANGLE:
AMELIA COURT HOUSE, VA.

PREPARED BY:

B & B Consultants, Inc.
Engineers - Surveyors - Lab Analysts -
Plant Operators - Environmental Services
Chase City & South Hill, Virginia

0 750 1,500 3,000 4,500

SCALE: 1" = 1,500'

Attachment 5

Ambient Stream Data

Ambient Stream Data

Station_ID	Collection_Date_Time	Field_pH (SU)	DO_Probe (mg/l)	Temperature (°C)	Field_Data_Comment
2-SMK002.57	8/20/03 11:45	6.98	7.59	21.73	NORMAL FLOW
	8/20/03 11:45	6.98	7.59	21.73	NORMAL FLOW
	8/20/03 11:45	6.98	7.59	21.73	NORMAL FLOW
	8/20/03 11:45	6.98	7.59	21.73	NORMAL FLOW
	10/8/03 11:40	6.85	8.97	15.35	NORMAL FLOW
	10/8/03 11:40	6.85	8.97	15.35	NORMAL FLOW
	10/8/03 11:40	6.85	8.97	15.35	NORMAL FLOW
	10/8/03 11:40	6.85	8.97	15.35	NORMAL FLOW
	12/2/03 12:55	6.61	11.71	5.86	NORMAL FLOW.
	12/2/03 12:55	6.61	11.71	5.86	NORMAL FLOW.
	12/2/03 12:55	6.61	11.71	5.86	NORMAL FLOW.
	12/2/03 12:55	6.61	11.71	5.86	NORMAL FLOW.
	2/24/04 12:20	7.07	12.58	6.12	NORMAL FLOW.
	2/24/04 12:20	7.07	12.58	6.12	NORMAL FLOW.
	2/24/04 12:20	7.07	12.58	6.12	NORMAL FLOW.
	2/24/04 12:20	7.07	12.58	6.12	NORMAL FLOW.
	4/29/04 12:30	6.99	10.25	15.27	--
	4/29/04 12:30	6.99	10.25	15.27	--
	4/29/04 12:30	6.99	10.25	15.27	--
	4/29/04 12:30	6.99	10.25	15.27	--
	6/2/04 11:55	7.11	8	19.93	NORMAL FLOW
	6/2/04 11:55	7.11	8	19.93	NORMAL FLOW
	6/2/04 11:55	7.11	8	19.93	NORMAL FLOW
	6/2/04 11:55	7.11	8	19.93	NORMAL FLOW
	6/29/04 13:15	7.07	7.91	21.13	NORMAL FLOW
	6/29/04 13:15	7.07	7.91	21.13	NORMAL FLOW
	6/29/04 13:15	7.07	7.91	21.13	NORMAL FLOW
	6/29/04 13:15	7.07	7.91	21.13	NORMAL FLOW
	9/2/04 11:30	7.08	8.37	20.85	ABOVE NORMAL FLOW
	9/2/04 11:30	7.08	8.37	20.85	ABOVE NORMAL FLOW
	9/2/04 11:30	7.08	8.37	20.85	ABOVE NORMAL FLOW
	9/2/04 11:30	7.08	8.37	20.85	ABOVE NORMAL FLOW
	11/18/04 13:00	6.92	10.47	10.73	--
	11/18/04 13:00	6.92	10.47	10.73	--
	11/18/04 13:00	6.92	10.47	10.73	--
	11/18/04 13:00	6.92	10.47	10.73	--
	1/4/05 11:05	7.09	10.52	11.38	NORMAL FLOW
	1/4/05 11:05	7.09	10.52	11.38	NORMAL FLOW
	1/4/05 11:05	7.09	10.52	11.38	NORMAL FLOW
	1/4/05 11:05	7.09	10.52	11.38	NORMAL FLOW
	3/3/05 10:55	6.97	12.92	2.67	NORMAL FLOW
	3/3/05 10:55	6.97	12.92	2.67	NORMAL FLOW
	3/3/05 10:55	6.97	12.92	2.67	NORMAL FLOW
	3/3/05 10:55	6.97	12.92	2.67	NORMAL FLOW
Max		7.11	12.92	21.73	
Min		6.61	7.59	2.67	
Average		6.98	9.94	13.73	
90%		7.09	12.58	21.13	
10%		6.85	7.91	5.86	

Ambient Stream Data

Station_ID	Collection_Date_Time	Nitrogen, Total (mg/l as N)	Nitrogen, Ammonia, Total (mg/l as N)	Nitrite Plus Nitrate, Total 1 DET. (mg/l as N)	Phosphorus, Total (mg/l as P)	Hardness, Total (mg/l as CACO3)	E. Coli - MTEC - MF (NO/100ML)
SMK002.57	8/20/2003 11:45	1.0400	0.0400	0.1700	0.0500	27.3	150.0
	10/8/2003 11:40	0.5000	0.0400	0.1300	0.0300	24.3	100.0
	12/2/2003 12:55	0.6500	0.0400	0.1800	0.0400	24.0	50.0
	2/24/2004 12:20	0.3900	0.0400	0.1800	0.0300	14.1	75.0
	4/29/2004 12:30	0.7200	0.0500	0.1500	0.0400	25.9	75.0
	5/2/2004 11:55	0.6500	0.1100	0.2400	0.0400	30.0	75.0
	6/29/2004 13:15	0.4700	0.0400	0.2200	0.0400	28.0	150.0
	9/2/2004 11:30	0.5800	0.0400	0.1900	0.0600	23.4	380.0
	11/18/2004 13:00	0.4000	0.0400	0.1900	0.0400	32.0	75.0
	1/4/2005 11:05	0.4200	0.0400	0.1800	0.0300	26.0	100.0
	3/3/2005 10:55	0.4500	0.0400	0.2100	0.0200	24.0	50.0
High		1.04	0.11	0.24	0.06	32.00	380.00
Low		0.39	0.04	0.13	0.02	14.10	50.00
Average		0.57	0.05	0.19	0.04	25.36	116.36
90%		0.72	0.05	0.22	0.05	30.00	150.00
10%		0.40	0.04	0.15	0.03	23.40	50.00

Ambient Temperature Data, High Flow Months (Dec - Apr)

Station_ID	Collection_Date_Time	Temperature (°C)	Field_Data_Comment
2-SMK002.57	12/2/03 12:55	5.86	NORMAL FLOW.
	12/2/03 12:55	5.86	NORMAL FLOW.
	12/2/03 12:55	5.86	NORMAL FLOW.
	12/2/03 12:55	5.86	NORMAL FLOW.
	2/24/04 12:20	6.12	NORMAL FLOW.
	2/24/04 12:20	6.12	NORMAL FLOW.
	2/24/04 12:20	6.12	NORMAL FLOW.
	2/24/04 12:20	6.12	NORMAL FLOW.
	4/29/04 12:30	15.27	--
	4/29/04 12:30	15.27	--
	4/29/04 12:30	15.27	--
	4/29/04 12:30	15.27	--
	1/4/05 11:05	11.38	NORMAL FLOW
	1/4/05 11:05	11.38	NORMAL FLOW
	1/4/05 11:05	11.38	NORMAL FLOW
	1/4/05 11:05	11.38	NORMAL FLOW
	3/3/05 10:55	2.67	NORMAL FLOW
	3/3/05 10:55	2.67	NORMAL FLOW
	3/3/05 10:55	2.67	NORMAL FLOW
	3/3/05 10:55	2.67	NORMAL FLOW
Max		15.27	
Min		2.67	
Average		8.26	
90%		15.27	
10%		2.67	

Attachment 6

Stream Sanitation Analysis

MEMORANDUM

DEPARTMENT OF ENVIRONMENTAL QUALITY
Piedmont Regional Office

4949-A Cox Road, Glen Allen, VA 23060-6296

804/527-5020

SUBJECT: **Stream Sanitation Analysis – Smacks Creek**
Proposed Amelia Courthouse STP (VA0091707)

TO: **Jarad Morton**

FROM: **Jennifer V. Palmore**

DATE: **October 12, 2005**

A request for a stream sanitation analysis for a proposed Amelia Courthouse Sanitary District wastewater treatment plant was received on August 11, 2005. The discharge will be located on Smacks Creek on the upstream side of the Route 627 bridge. The proposed design flow of the facility is 0.999 MGD.

The water quality of Smacks Creek was sampled at the Route 153 bridge from 2003-2005. This is approximately 4 miles downstream of the proposed discharge. The data retrieval is attached. The data meets current Water Quality Standards and the dissolved oxygen values are considerably above the minimum standards; therefore, the creek is considered a Tier 2 water and antidegradation is applied.

A flow frequency analysis was performed on September 9, 2005. The analysis is attached. The 7Q10 flow of Smacks Creek at the proposed discharge point is 0.04 MGD (0.05 cfs).

A site visit was performed by Jennifer Palmore and Jarad Morton on October 6, 2005. Although the stream has a low velocity, there is a well-defined channel and no evidence of a dissolved oxygen problem, as discussed above, therefore the stream was considered modelable using DEQ's Regional Model 4.1. The modeling input and output are attached. The model indicates that with a discharge flow of 0.999 MGD the following limits are necessary to maintain a maximum 0.200 mg/L decrease in background dissolved oxygen at 7Q10 conditions:

Q:	0.999 MGD
$cBOD_5$:	5 mg/L
TKN:	3.0 mg/L
DO :	6.9 mg/L

If you have any questions about this analysis or need any additional information, please do not hesitate to contact me.

REGIONAL MODELING SYSTEM VERSION 4.0

Model Input File for the Discharge to SMACKS CREEK.

File Information

File Name:	C:\Documents and Settings\jvpalmore\My Documents\models\Amel
Date Modified:	October 12, 2005

Water Quality Standards Information

Stream Name:	SMACKS CREEK
River Basin:	James River Basin
Section:	5c
Class:	III - Nontidal Waters (Coastal and Piedmont)
Special Standards:	None

Background Flow Information

Gauge Used:	02040590 Nibbs Creek above Courthouse Branch
Gauge Drainage Area:	17.81 Sq.Mi.
Gauge 7Q10 Flow:	0.097 MGD
Headwater Drainage Area:	6.4 Sq.Mi.
Headwater 7Q10 Flow:	3.485683E-02 MGD (Net; includes Withdrawals/Discharges)
Withdrawal/Discharges:	0 MGD
Incremental Flow in Segments:	5.446379E-03 MGD/Sq.Mi.

Background Water Quality

Background Temperature:	28 Degrees C
Background cBOD5:	2 mg/l
Background TKN:	0 mg/l
Background D.O.:	7.095954 mg/l

Model Segmentation

Number of Segments:	1
Model Start Elevation:	245 ft above MSL
Model End Elevation:	227 ft above MSL

REGIONAL MODELING SYSTEM VERSION 4.0
Model Input File for the Discharge to SMACKS CREEK.

Segment Information for Segment 1

Definition Information

Segment Definition:	A discharge enters.
Discharge Name:	VA0091707 PROPOSED AMELIA COURTHOUSE STP
VPDES Permit No.:	

Discharger Flow Information

Flow:	0.999 MGD
cBOD5:	5 mg/l
TKN:	3 mg/l
D.O.:	6.9 mg/l
Temperature:	28 Degrees C

Geographic Information

Segment Length:	1.23 miles
Upstream Drainage Area:	6.4 Sq.Mi.
Downstream Drainage Area:	0 Sq.Mi.
Upstream Elevation:	245 Ft.
Downstream Elevation:	227 Ft.

Hydraulic Information

Segment Width:	18 Ft.
Segment Depth:	3 Ft.
Segment Velocity:	0.025 Ft./Sec.
Segment Flow:	1.034 MGD
Incremental Flow:	-0.035 MGD (Applied at end of segment.)

Channel Information

Cross Section:	Rectangular
Character:	Moderately Meandering
Pool and Riffle:	No
Bottom Type:	Silt
Sludge:	None
Plants:	None
Algae:	None

modout

"Model Run For C:\Documents and Settings\jvpalmore\My Documents\models\Amelia Courthouse STP Smacks.mod On 10/12/2005 2:44:53 PM"

"Model is for SMACKS CREEK."
"Model starts at the VA0091707 PROPOSED AMELIA COURTHOUSE STP discharge."

"Background Data"

"7Q10",	"cBOD5",	"TKN",	"DO",	"Temp"
"(mgd)",	"(mg/l)",	"(mg/l)",	"(mg/l)",	"deg C"
.0349,	2,	0,	7.096,	28

"Discharge/Tributary Input Data for Segment 1"

"Flow",	"cBOD5",	"TKN",	"DO",	"Temp"
"(mgd)",	"(mg/l)",	"(mg/l)",	"(mg/l)",	"deg C"
.999,	5,	3,	,6.9,	28

"Hydraulic Information for Segment 1"

"Length",	"Width",	"Depth",	"Velocity"
"(mi)",	"(ft)",	"(ft)",	"(ft/sec)"
1.23,	18,	3,	.025

"Initial Mix Values for Segment 1"

"Flow",	"DO",	"cBOD",	"nBOD",	"DOSat",	"Temp"
"(mgd)",	"(mg/l)",	"(mg/l)",	"(mg/l)",	"(mg/l)",	"deg C"
1.0339,	6.907,	12.247,	0,	7.887,	28

"Rate Constants for Segment 1. - (All units Per Day)"

"k1",	"k1@T",	"k2",	"k2@T",	"kn",	"kn@T",	"BD",	"BD@T"
.7,	1.011,	8.78,	10.615,	.15,	.278,	0,	0

"Output for Segment 1"
"Segment starts at VA0091707 PROPOSED AMELIA COURTHOUSE STP"

"Total", "Dist.",	"Segm." "Dist.",	"DO",	"cBOD",	"nBOD"
"(mi)",	"(mi)",	"(mg/l)",	"(mg/l)",	"(mg/l)"
0,	0,	6.907,	12.247,	0
.1,	.1,	6.903,	9.566,	0
.2,	.2,	7.098,	7.472,	0
.3,	.3,	7.098,	5.836,	0
.4,	.4,	7.098,	5,	0
.5,	.5,	7.098,	5,	0
.6,	.6,	7.098,	5,	0
.7,	.7,	7.098,	5,	0
.8,	.8,	7.098,	5,	0
.9,	.9,	7.098,	5,	0
1,	1,	7.098,	5,	0
1.1,	1.1,	7.098,	5,	0
1.2,	1.2,	7.098,	5,	0
1.23,	1.23,	7.098,	5,	0

"END OF FILE"

	00610		00630		00665		00900		31648		82079	
	NITROGEN, AMMONIA, TOTAL (MG/L AS N)		NITRITE PLUS NITRATE, TOTAL 1 DET. (MG/L AS N)		PHOSPHORUS, TOTAL (MG/L AS P)		HARDNESS, TOTAL (MG/L AS CACO3)		E. COLI - MTEC-MF N0/100ML		TURBIDITY,LAB NEPHELOMETRIC TURBIDITY UNITS, NTU	
Collection Date Time	Value	Com Code	Value	Com Code	Value	Com Code	Value	Com Code	Value	Com Code	Value	Com Code
08/20/2003 11:45	.0400	NULL	.1700	NULL	.0500	NULL	27.3000	NULL	150.0000	NULL	16.0000	NULL
10/08/2003 11:40	.0400	U	.1300	NULL	.0300	NULL	24.3000	NULL	100.0000	NULL	14.0000	NULL
12/02/2003 12:55	.0400	NULL	.1800	NULL	.0400	NULL	24.0000	NULL	50.0000	NULL	12.0000	NULL
02/24/2004 12:20	.0400	U	.1600	NULL	.0300	NULL	14.1000	NULL	75.0000	NULL	13.0000	NULL
04/29/2004 12:30	.0500	NULL	.1500	NULL	.0400	NULL	25.9000	NULL	75.0000	NULL	12.0000	NULL
06/02/2004 11:55	.1100	NULL	.2400	NULL	.0400	NULL	30.0000	NULL	75.0000	NULL	20.0000	NULL
06/29/2004 13:15	.0400	U	.2200	NULL	.0400	NULL	26.0000	NULL	150.0000	NULL	12.0000	NULL
09/02/2004 11:30	.0400	NULL	.1900	NULL	.0600	NULL	23.4000	NULL	360.0000	NULL	14.0000	NULL
11/18/2004 13:00	.0400	NULL	.1900	NULL	.0400	NULL	32.0000	NULL	75.0000	NULL	12.0000	NULL
01/04/2005 11:05	.0400	U	.1800	NULL	.0300	NULL	26.0000	NULL	100.0000	NULL	[illegible]	NULL
[illegible]	[illegible]	U	.2100	NULL	.0200	NULL	24.0000	NULL	50.0000	NULL	10.3000	NULL

									Parm	00530		00600	
									Name	RESIDUE, TOTAL NONFILTRABLE (MG/L)		NITROGEN, TOTAL (MG/L AS N)	
	Collection Date Time	Depth Desc	Depth	Temp Celcius	Do Probe	Field Ph	Container Id Desc	Comment		Value	Com Code	Value	Com Code
M0002.57	08/20/2003 11:45	S	0.3	21.73	7.59	6.98	R	NORMAL FLOW		4.0000	NULL	1.0400	NULL
	10/08/2003 11:40	S	0.3	15.35	8.97	6.85	R	NORMAL FLOW		6.0000	NULL	.5000	NULL
	12/02/2003 12:55	S	0.3	5.86	11.71	6.61	R	NORMAL FLOW.		5.0000	NULL	.6500	NULL
	02/24/2004 12:20	S	0.3	6.12	12.58	7.07	R	NORMAL FLOW.		6.0000	NULL	.3900	NULL
	04/29/2004 12:30	S	0.3	15.27	10.25	6.99	R	NULL		5.0000	NULL	.7200	NULL
	06/02/2004 11:55	S	0.3	19.93	8	7.11	R	NORMAL FLOW		7.0000	NULL	.6500	NULL
	06/29/2004 13:15	S	0.3	21.13	7.91	7.07	R	NORMAL FLOW		6.0000	NULL	.4700	NULL
	09/02/2004 11:30	S	0.3	20.95	8.37	7.08	R	ABOVE NORMAL FLOW		13.0000	NULL	.5800	NULL
	11/18/2004 13:00	S	0.3	10.73	10.47	6.92	R	NULL		5.0000	NULL	.4000	NULL
	01/04/2005 11:05	S	0.3	11.38	10.62	7.09	R	NORMAL FLOW		5.0000	NULL	.4200	NULL
	03/02/2005 10:55	S	[illegible]	[illegible]	[illegible]	[illegible]	R	NORMAL FLOW		6.0000	NULL	.4500	NULL

MEMORANDUM

DEPARTMENT OF ENVIRONMENTAL QUALITY
Piedmont Regional Office
4949-A Cox Road Glen Allen, Virginia 23060

SUBJECT: Flow Frequency Determination
Proposed Amelia Courthouse STP – VA0091707

TO: Jarad Morton

FROM: Jennifer V. Palmore

DATE: September 9, 2005

COPIES: Modeling File

The Amelia County Sanitation District has applied for a new wastewater treatment plant discharge to Smacks Creek near Amelia Courthouse, VA. Stream flow frequencies are needed for use in developing water quality models and toxic effluent limitations for the VPDES permit.

According to records, the only streamflow measurements that have been collected in VAP-J10R were taken on the Appomattox River and are not comparable for use in this analysis. However, the DEQ conducted fifteen flow measurements on Nibbs Creek in an adjacent watershed from 1996 to 2003. The measurements were made above the confluence with Courthouse Branch near Amelia Courthouse. The measurements were correlated with the same day daily mean values from the continuous record gage on Deep Creek near Mannboro, VA (#02041000). The measurements and daily mean values were plotted on a logarithmic graph and a best fit power trend line was plotted through the data points. The required flow frequencies from the reference gage were plugged into the equation for the regression line and the associated flow frequencies at the measurement site on Nibbs Creek were calculated. Drainage area proportion was then used to calculate the flow frequencies on Smacks Creek at the discharge point. The data for the reference gage, measurement site, and discharge point are presented below and the regression analysis is attached.

Deep Creek near Mannboro, VA (#02041000)
Drainage Area = 158 mi^2
Period of Record = 1947-2003

1Q30 = 0.21 cfs	High Flow 1Q10 = 25 cfs
1Q10 = 0.80 cfs	High Flow 7Q10 = 29 cfs
7Q10 = 1.0 cfs	High Flow 30Q10 = 46 cfs
30Q10 = 2.8 cfs	HM = None
30Q5 = 5.3 cfs	

Nibbs Creek above Courthouse Branch at Amelia Courthouse, VA (#02040590)
Drainage Area = 17.81 mi^2

1Q30 = 0.04 cfs	High Flow 1Q10 = 2.39 cfs
1Q10 = 0.13 cfs	High Flow 7Q10 = 2.72 cfs
7Q10 = 0.15 cfs	High Flow 30Q10 = 4.03 cfs
30Q10 = 0.37 cfs	HM = None
30Q5 = 0.64 cfs	

Smacks Creek at discharge point

Drainage Area = 6.40 mi^2

1Q30 = 0.01 cfs	High Flow 1Q10 = 0.86 cfs
1Q10 = 0.05 cfs	High Flow 7Q10 = 0.98 cfs
7Q10 = 0.06 cfs	High Flow 30Q10 = 1.45 cfs
30Q10 = 0.13 cfs	HM = None
30Q5 = 0.23 cfs	

The high flow months are December through April. The values at the discharge point were determined by drainage area proportions and do not address any withdrawals, discharges, or springs.

If you have any questions about this analysis or need any additional information, please let me know.

Nibbs Creek above Courthouse Branch near Amelia Courthouse, Va. (#02[illegible]590)
vs Deep Creek near Mannboro, VA (#02041000)

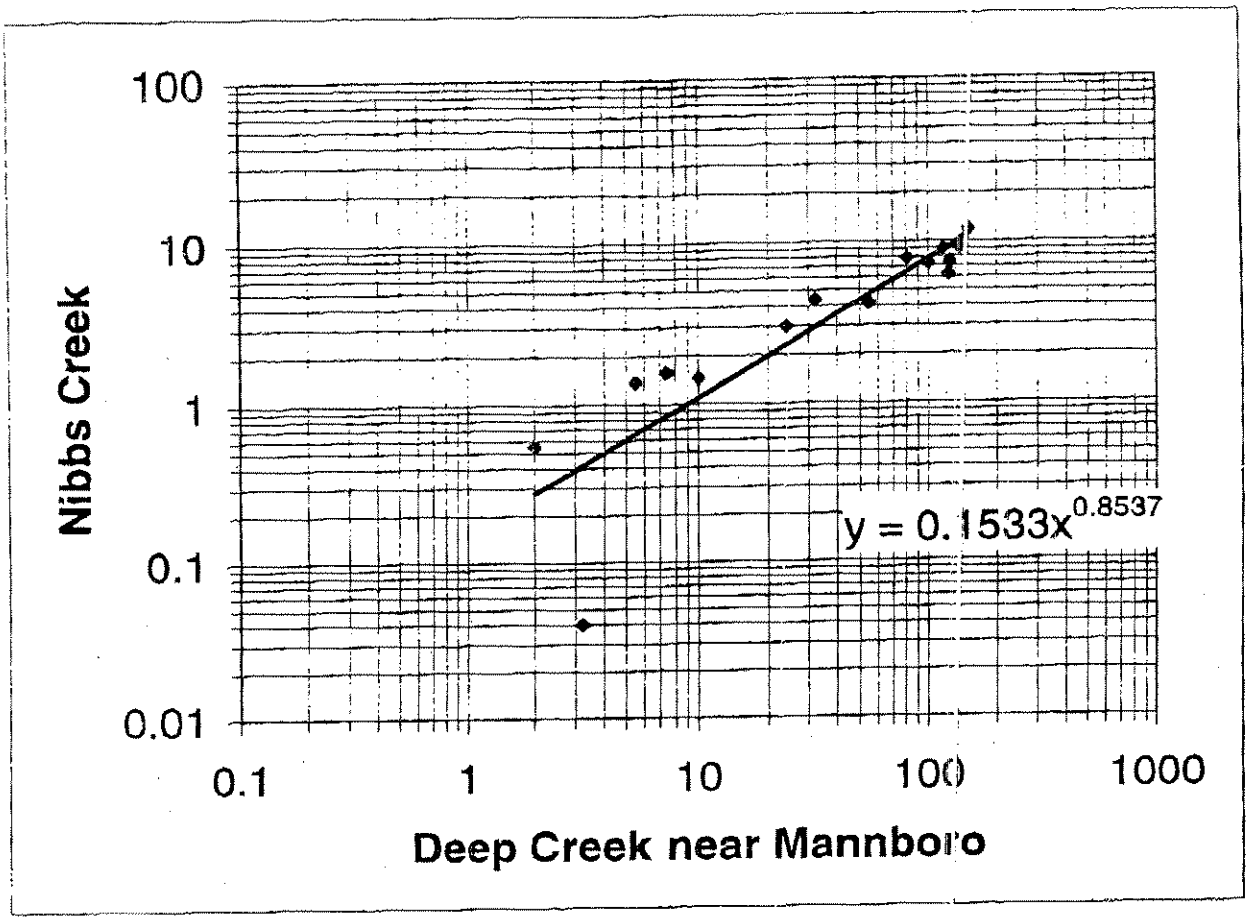

Flow Data (cfs)

Date	Deep	Nibbs
10/15/1996	100	7.39
5/16/1997	81	7.81
10/7/1997	5.5	1.38
9/14/1998	2	0.55
9/23/1998	7.4	1.58
5/13/1999	24	3.00
6/8/1999	10	1.46
8/10/1999	3.2	0.04
5/10/2000	55	4.14
5/10/2001	32	4.36
1/10/2003	122	6.25
3/19/2003	124	7.46
6/25/2003	137	9.15
10/2/2003	116	9.02
11/25/2003	150	11.80

SUMMARY OUTPUT

Regression Statistics	
Multiple R	0.953434
R Square	0.909036
Adjusted R Square	0.902039
Standard Error	1.146065
Observations	15

Flow Frequencies (cfs)

Deep		Nibbs	Sma
0.21	1Q30	0.04	0.
0.80	1Q10	0.13	0.
1.0	7Q10	0.15	0.
2.8	30Q10	0.37	0.
5.3	30Q5	0.64	0.
25	HF 1Q10	2.39	0.
29	HF 7Q10	2.72	0.
46	HF30Q10	4.03	1.
None	HM	None	No
	Ann Avg		
158	DA	17.81	6.
	Dec-Apr		
	Period 1947-2003		

Attachment 7

Ammonia Analysis

Mix.EXE

modout

Mixing Zone Predictions for Amelia Courthouse Sanitary District STP

Effluent Flow = 0.999 MGD
Stream 7Q10 = 0.039 MGD
Stream 30Q10 = 0.084 MGD
Stream 1Q10 = 0.032 MGD
Stream slope = 1.08 ft/ft
Stream width = 18 ft
Bottom scale = 3
Channel scale = 1

Mixing Zone Predictions @ 7Q10

Depth = .0481 ft
Length = 3864.28 ft
Velocity = 1.8554 ft/sec
Residence Time = .0241 days

Recommendation:

A complete mix assumption is appropriate for this situation and the entire 7Q10 may be used.

Mixing Zone Predictions @ 30Q10

Depth = .0493 ft
Length = 3783.09 ft
Velocity = 1.8872 ft/sec
Residence Time = .0232 days

Recommendation:

A complete mix assumption is appropriate for this situation and the entire 30Q10 may be used.

Mixing Zone Predictions @ 1Q10

Depth = .0479 ft
Length = 3877.46 ft
Velocity = 1.8504 ft/sec
Residence Time = .5821 hours

Recommendation:

A complete mix assumption is appropriate for this situation and the entire 1Q10 may be used.

Virginia DEQ Mixing Zone Analysis Version 2.1

FRESHWATER
WATER QUALITY CRITERIA / WASTELOAD ALLOCATION ANALYSIS

Facility Name: Amelia Courthouse District Sanitary District STP Permit No.: VA0091707

Receiving Stream: Smacks Creek

Version: OWP Guidance Memo 00-2011 (8/24/00)

Stream Information

Mean Hardness (as CaCO3) =	25.96 mg/L
90% Temperature (Annual) =	21.13 deg C
90% Temperature (Wet season) =	15.27 deg C
90% Maximum pH =	7.09 SU
10% Maximum pH =	6.85 SU
Tier Designation (1 or 2) =	2
Public Water Supply (PWS) Y/N? =	N
Trout Present Y/N? =	N
Early Life Stages Present Y/N? =	Y

Stream Flows

→ Flow Freq. Eq. Memo Attachment-one

1Q10 (Annual) =	0.032 MGD
7Q10 (Annual) =	0.039 MGD
30Q10 (Annual) =	0.084 MGD
1Q10 (Wet season) =	0.559 MGD
30Q10 (Wet season)	0.9425 MGD
30Q5 =	0.15 MGD
Harmonic Mean =	MGD
Annual Average =	NA MGD

Mixing Information

Annual - 1Q10 Mix =	100 %
- 7Q10 Mix =	100 %
- 30Q10 Mix =	100 %
Wet Season - 1Q10 Mix =	100 %
- 30Q10 Mix =	100 %

Mix, EXE

Effluent Information

worst case assumption No Data provided

Mean Hardness (as CaCO3) =	25 mg/L
90% Temp (Annual) =	App. 20.5 deg C
90% Temp (Wet season) =	deg C
90% Maximum pH =	7.5 SU
10% Maximum pH =	7.5 SU
Discharge Flow =	0.999 MGD

Assumption, see Discrib in fact sheet

Parameter (ug/l unless noted)	Background Conc	Water Quality Criteria Acute	Chronic	HH (PWS)	HH	Wasteload Allocations Acute	Chronic	HH (PWS)	HH	Antidegradation Baseline Acute	Chronic	HH (PWS)	HH	Antidegradation Allocations Acute	Chronic	HH (PWS)	HH	Most Limiting Allocations Acute	Chronic	HH (PWS)	HH
Acenaphthene	0	–	–	na	2.7E+03	–	–	na	3.1E+03	–	–	na	2.7E+02	–	–	na	3.1E+02	–	–	na	3.1E+02
Acrolein	0	–	–	na	7.8E+02	–	–	na	9.0E+02	–	–	na	7.8E+01	–	–	na	9.0E+01	–	–	na	9.0E+01
Acrylonitrile C	0	–	–	na	6.6E+00	–	–	na	6.6E+00	–	–	na	6.6E-01	–	–	na	6.6E-01	–	–	na	6.6E-01
Aldrin C	0	3.0E+00	–	na	1.4E-03	3.1E+00	–	na	1.4E-03	7.5E-01	–	na	1.4E-04	7.7E-01	–	na	1.4E-04	7.7E-01	–	na	1.4E-04
Ammonia-N (mg/l) (Yearly)	0	2.05E+01	2.09E+00	na	–	2.1E+01	3.3E+00	na	–	5.13E+00	7.71E-01	na	–	5.3E+00	8.4E-01	na	–	5.3E+00	8.4E-01	na	–
Ammonia-N (mg/l) (High Flow)	0	2.60E+01	5.23E+00	na	–	4.1E+01	1.0E+01	na	–	6.50E+00	1.31E+00	na	–	1.0E+01	2.6E+00	na	–	1.0E+01	2.5E+00	na	–
Anthracene	0	–	–	na	1.1E+05	–	–	na	1.3E+05	–	–	na	1.1E+04	–	–	na	1.3E+04	–	–	na	1.3E+04
Antimony	0	–	–	na	4.3E+03	–	–	na	4.9E+03	–	–	na	4.3E+02	–	–	na	4.9E+02	–	–	na	4.9E+02
Arsenic	0	3.4E+02	1.5E+02	na	–	3.5E+02	1.6E+02	na	–	6.5E+01	3.8E+01	na	–	6.8E+01	3.9E+01	na	–	6.8E+01	3.9E+01	na	–
Barium	0	–	–	na	–	–	–	na	–	–	–	na	–	–	–	na	–	–	–	na	–
Benzene C	0	–	–	na	7.1E+02	–	–	na	7.1E+02	–	–	na	7.1E+01	–	–	na	7.1E+01	–	–	na	7.1E+01
Benzidine C	0	–	–	na	5.4E-03	–	–	na	5.4E-03	–	–	na	5.4E-04	–	–	na	5.4E-04	–	–	na	5.4E-04
Benzo (a) anthracene C	0	–	–	na	4.9E-01	–	–	na	4.9E-01	–	–	na	4.9E-02	–	–	na	4.9E-02	–	–	na	4.9E-02
Benzo (b) fluoranthene C	0	–	–	na	4.9E-01	–	–	na	4.9E-01	–	–	na	4.9E-02	–	–	na	4.9E-02	–	–	na	4.9E-02
Benzo (k) fluoranthene C	0	–	–	na	4.9E-01	–	–	na	4.9E-01	–	–	na	4.9E-02	–	–	na	4.9E-02	–	–	na	4.9E-02
Benzo (a) pyrene C	0	–	–	na	4.9E-01	–	–	na	4.9E-01	–	–	na	4.9E-02	–	–	na	4.9E-02	–	–	na	4.9E-02
Bis2-Chloroethyl Ether	0	–	–	na	1.4E+01	–	–	na	1.6E+01	–	–	na	1.4E+00	–	–	na	1.6E+00	–	–	na	1.6E+00
Bis2-Chloroisopropyl Ether	0	–	–	na	1.7E+05	–	–	na	2.0E+05	–	–	na	1.7E+04	–	–	na	2.0E+04	–	–	na	2.0E+04
Bromoform C	0	–	–	na	3.6E+03	–	–	na	3.6E+03	–	–	na	3.6E+02	–	–	na	3.6E+02	–	–	na	3.6E+02
Butylbenzylphthalate	0	–	–	na	5.2E+03	–	–	na	6.0E+03	–	–	na	5.2E+02	–	–	na	6.0E+02	–	–	na	6.0E+02
Cadmium	0	8.2E-01	3.8E-01	na	–	8.5E-01	4.0E-01	na	–	2.1E-01	9.6E-02	na	–	2.1E-01	9.9E-02	na	–	2.1E-01	9.9E-02	na	–
Carbon Tetrachloride C	0	–	–	na	4.4E+01	–	–	na	4.4E+01	–	–	na	4.4E+00	–	–	na	4.4E+00	–	–	na	4.4E+00
Chlordane C	0	2.4E+00	4.3E-03	na	2.2E-02	2.5E+00	4.5E-03	na	2.2E-02	6.0E-01	1.1E-03	na	2.2E-03	6.2E-01	1.1E-03	na	2.2E-03	6.2E-01	1.1E-03	na	2.2E-03
Chloride	0	8.6E+05	2.3E+05	na	–	8.9E+05	2.4E+05	na	–	2.2E+05	5.8E+04	na	–	2.2E+05	6.0E+04	na	–	2.2E+05	6.0E+04	na	–
TRC	0	1.9E+01	1.1E+01	na	–	2.0E+01	1.1E+01	na	–	4.8E+00	2.8E+00	na	–	4.9E+00	2.9E+00	na	–	4.9E+00	2.9E+00	na	–
Chlorobenzene	0	–	–	na	2.1E+04	–	–	na	2.4E+04	–	–	na	2.1E+03	–	–	na	2.4E+03	–	–	na	2.4E+03

STATS.EXE

1/9/2006 4:18:48 PM

Facility = Amelia WWTP
Chemical = Ammonia
Chronic averaging period = 30
WLAa = 5.3
WLAc = 0.84
Q.L. = .20
# samples/mo. = 1
# samples/wk. = 1

Summary of Statistics:

observations = 1
Expected Value = 9
Variance = 29.16
C.V. = 0.6
97th percentile daily values = 21.9007
97th percentile 4 day average = 14.9741
97th percentile 30 day average= 10.8544
< Q.L. = 0
Model used = BPJ Assumptions, type 2 data

A limit is needed based on Chronic Toxicity
Maximum Daily Limit = 1.6948428784697
Average Weekly limit = 1.6948428784697
Average Monthly LImit = 1.6948428784697

The data are:

9

arameter	Background	Water Quality Criteria				Wasteload Allocations				Antidegradation Baseline				Antidegradation Allocations				Most Limiting Allocations			
g/l unless noted)	Conc.	Acute	Chronic	HH (PWS)	HH	Acute	Chronic	HH (PWS)	HH	Acute	Chronic	HH (PWS)	HH	Acute	Chronic	HH (PWS)	HH	Acute	Chronic	HH (PWS)	HH
hlorodibromomethane[C]	0	–	–	na	3.4E+02	–	–	na	3.4E+02	–	–	na	3.4E+01	–	–	na	3.4E+01	–	–	na	3.4E+01
hloroform [C]	0	–	–	na	2.9E+04	–	–	na	2.9E+04	–	–	na	2.9E+03	–	–	na	2.9E+03	–	–	na	2.9E+03
-Chloronaphthalene	0	–	–	na	4.3E+03	–	–	na	4.9E+03	–	–	na	4.3E+02	–	–	na	4.9E+02	–	–	na	4.9E+02
-Chlorophenol	0	–	–	na	4.0E+02	–	–	na	4.6E+02	–	–	na	4.0E+01	–	–	na	4.6E+01	–	–	na	4.6E+01
hlorpyrifos	0	8.3E-02	4.1E-02	na	–	8.6E-02	4.3E-02	na	–	2.1E-02	1.0E-02	na	–	2.1E-02	1.1E-02	na	–	2.1E-02	1.1E-02	na	–
hromium III	0	1.8E+02	2.4E+01	na	–	1.9E+02	2.5E+01	na	–	4.6E+01	6.0E+00	na	–	4.7E+01	6.2E+00	na	–	4.7E+01	6.2E+00	na	–
hromium VI	0	1.6E+01	1.1E+01	na	–	1.7E+01	1.1E+01	na	–	4.0E+00	2.8E+00	na	–	4.1E+00	2.9E+00	na	–	4.1E+00	2.9E+00	na	–
hromium, Total	0	–	–	na	–	–	–	na	–	–	–	na	–	–	–	na	–	–	–	na	–
hrysene [C]	0	–	–	na	4.9E-01	–	–	na	4.9E-01	–	–	na	4.9E-02	–	–	na	4.9E-02	–	–	na	4.9E-02
opper	0	3.6E+00	2.7E+00	na	–	3.8E+00	2.8E+00	na	–	9.1E-01	6.9E-01	na	–	9.4E-01	7.1E-01	na	–	9.4E-01	7.1E-01	na	–
yanide	0	2.2E+01	5.2E+00	na	2.2E+05	2.3E+01	5.4E+00	na	2.5E+05	5.5E+00	1.3E+00	na	2.2E+04	5.7E+00	1.4E+00	na	2.5E+04	5.7E+00	1.4E+00	na	2.5E+04
DD [C]	0	–	–	na	8.4E-03	–	–	na	8.4E-03	–	–	na	8.4E-04	–	–	na	8.4E-04	–	–	na	8.4E-04
DE [C]	0	–	–	na	5.9E-03	–	–	na	5.9E-03	–	–	na	5.9E-04	–	–	na	5.9E-04	–	–	na	5.9E-04
DT [C]	0	1.1E+00	1.0E-03	na	5.9E-03	1.1E+00	1.0E-03	na	5.9E-03	2.8E-01	2.5E-04	na	5.9E-04	2.8E-01	2.6E-04	na	5.9E-04	2.8E-01	2.6E-04	na	5.9E-04
ameton	0	–	1.0E-01	na	–	–	1.0E-01	na	–	–	2.5E-02	na	–	–	2.6E-02	na	–	–	2.6E-02	na	–
ibenz(a,h)anthracene [C]	0	–	–	na	4.9E-01	–	–	na	4.9E-01	–	–	na	4.9E-02	–	–	na	4.9E-02	–	–	na	4.9E-02
butyl phthalate	0	–	–	na	1.2E+04	–	–	na	1.4E+04	–	–	na	1.2E+03	–	–	na	1.4E+03	–	–	na	1.4E+03
ichloromethane (Methylene Chloride) [C]	0	–	–	na	1.6E+04	–	–	na	1.6E+04	–	–	na	1.6E+03	–	–	na	1.6E+03	–	–	na	1.6E+03
1,2-Dichlorobenzene	0	–	–	na	1.7E+04	–	–	na	2.0E+04	–	–	na	1.7E+03	–	–	na	2.0E+03	–	–	na	2.0E+03
1,3-Dichlorobenzene	0	–	–	na	2.6E+03	–	–	na	3.0E+03	–	–	na	2.6E+02	–	–	na	3.0E+02	–	–	na	3.0E+02
1,4-Dichlorobenzene	0	–	–	na	2.6E+03	–	–	na	3.0E+03	–	–	na	2.6E+02	–	–	na	3.0E+02	–	–	na	3.0E+02
3,3-Dichlorobenzidine [C]	0	–	–	na	7.7E-01	–	–	na	7.7E-01	–	–	na	7.7E-02	–	–	na	7.7E-02	–	–	na	7.7E-02
Dichlorobromomethane [C]	0	–	–	na	4.6E+02	–	–	na	4.6E+02	–	–	na	4.6E+01	–	–	na	4.6E+01	–	–	na	4.6E+01
1,2-Dichloroethane [C]	0	–	–	na	9.9E+02	–	–	na	9.9E+02	–	–	na	9.9E+01	–	–	na	9.9E+01	–	–	na	9.9E+01
1,1-Dichloroethylene	0	–	–	na	1.7E+04	–	–	na	2.0E+04	–	–	na	1.7E+03	–	–	na	2.0E+03	–	–	na	2.0E+03
1,2-trans-dichloroethylene	0	–	–	na	1.4E+05	–	–	na	1.6E+05	–	–	na	1.4E+04	–	–	na	1.6E+04	–	–	na	1.6E+04
2,4-Dichlorophenol	0	–	–	na	7.9E+02	–	–	na	9.1E+02	–	–	na	7.9E+01	–	–	na	9.1E+01	–	–	na	9.1E+01
2,4-Dichlorophenoxy acetic acid (2,4-D)	0	–	–	na	–	–	–	na	–	–	–	na	–	–	–	na	–	–	–	na	–
1,2-Dichloropropane [C]	0	–	–	na	3.9E+02	–	–	na	3.9E+02	–	–	na	3.9E+01	–	–	na	3.9E+01	–	–	na	3.9E+01
1,3-Dichloropropene	0	–	–	na	1.7E+03	–	–	na	2.0E+03	–	–	na	1.7E+02	–	–	na	2.0E+02	–	–	na	2.0E+02
Dieldrin [C]	0	2.4E-01	5.6E-02	na	1.4E-03	2.5E-01	5.8E-02	na	1.4E-03	6.0E-02	1.4E-02	na	1.4E-04	6.2E-02	1.5E-02	na	1.4E-04	6.2E-02	1.5E-02	na	1.4E-04
iethylhexylamine	0	–	–	na	1.2E+05	–	–	na	1.4E+05	–	–	na	1.2E+04			na	1.4E+04	–	–	na	1.4E+04
Di-2-Ethylhexyl Phthalate [C]	0	–	–	na	5.9E+01	–	–	na	5.9E+01	–	–	na	5.9E+00	–	–	na	5.9E+00	–	–	na	5.9E+00
2,4-Dimethylphenol	0	–	–	na	2.3E+03	–	–	na	2.6E+03	–	–	na	2.3E+02	–	–	na	2.6E+02	–	–	na	2.6E+02
Dimethyl Phthalate	0	–	–	na	2.9E+06	–	–	na	3.3E+06	–	–	na	2.9E+05	–	–	na	3.3E+05	–	–	na	3.3E+05
Di-n-Butyl Phthalate	0	–	–	na	1.2E+04	–	–	na	1.4E+04	–	–	na	1.2E+03	–	–	na	1.4E+03	–	–	na	1.4E+03
2,4 Dinitrophenol	0	–	–	na	1.4E+04	–	–	na	1.6E+04	–	–	na	1.4E+03	–	–	na	1.6E+03	–	–	na	1.6E+03
2-Methyl-4,6-Dinitrophenol	0	–	–	na	7.65E+02	–	–	na	8.8E+02	–	–	na	7.7E+01	–	–	na	8.8E+01	–	–	na	8.8E+01
2,4-Dinitrotoluene [C]	0	–	–	na	9.1E+01	–	–	na	9.1E+01	–	–	na	9.1E+00	–	–	na	9.1E+00	–	–	na	9.1E+00
Dioxin (2,3,7,8-tetrachlorodibenzo-p-dioxin) (ppq)	0	–	–	na	1.2E-06	–	–	na	na	–	–	na	1.2E-07	–	–	na	1.2E-07	–	–	na	na
1,2-Diphenylhydrazine [C]	0	–	–	na	5.4E+00	–	–	na	5.4E+00	–	–	na	5.4E-01	–	–	na	5.4E-01	–	–	na	5.4E-01
Alpha-Endosulfan	0	2.2E-01	5.6E-02	na	2.4E+02	2.3E-01	5.8E-02	na	2.8E+02	5.5E-02	1.4E-02	na	2.4E+01	5.7E-02	1.5E-02	na	2.8E+01	5.7E-02	1.5E-02	na	2.8E+01
Beta-Endosulfan	0	2.2E-01	5.6E-02	na	2.4E+02	2.3E-01	5.8E-02	na	2.8E+02	5.5E-02	1.4E-02	na	2.4E+01	5.7E-02	1.5E-02	na	2.8E+01	5.7E-02	1.5E-02	na	2.8E+01
Endosulfan Sulfate	0	–	–	na	2.4E+02	–	–	na	2.8E+02	–	–	na	2.4E+01	–	–	na	2.8E+01	–	–	na	2.8E+01
Endrin	0	8.6E-02	3.6E-02	na	8.1E-01	8.9E-02	3.7E-02	na	9.3E-01	2.2E-02	9.0E-03	na	8.1E-02	2.2E-02	9.4E-03	na	9.3E-02	2.2E-02	9.4E-03	na	9.3E-02
Endrin Aldehyde	0	–	–	na	8.1E-01	–	–	na	9.3E-01	–	–	na	8.1E-02	–	–	na	9.3E-02	–	–	na	9.3E-02

Parameter (µg/l unless noted)	Background Conc	Water Quality Criteria				Wasteload Allocations				Antidegradation Baseline				Antidegradation Allocations				Most Limiting Allocations			
		Acute	Chronic	HH (PWS)	HH	Acute	Chronic	HH (PWS)	HH	Acute	Chronic	HH (PWS)	HH	Acute	Chronic	HH (PWS)	HH	Acute	Chronic	HH (PWS)	HH
Hexachlorobenzene	0	–	–	na	2.9E+04	–	–	na	3.3E+04	–	–	na	2.9E+03	–	–	na	3.3E+03	–	–	na	3.3E+03
Hexachlorobutadiene	0	–	–	na	3.7E+02	–	–	na	4.3E+02	–	–	na	3.7E+01	–	–	na	4.3E+01	–	–	na	4.3E+01
Hexachlorocyclopentadiene	0	–	–	na	1.4E+04	–	–	na	1.6E+04	–	–	na	1.4E+03	–	–	na	1.6E+03	–	–	na	1.6E+03
Hydrogen Sulfide	0	–	–	na	–	–	–	na	–	–	–	na	–	–	–	na	–	–	–	na	–
Hydrogen Sulfide	0	–	1.0E-02	na	–	–	1.0E-02	na	–	–	2.5E-03	na	–	–	2.6E-03	na	–	–	2.6E-03	na	–
Indeno (1,2,3-cd) pyrene[C]	0	5.2E-01	3.8E-03	na	2.1E-03	5.4E-01	3.9E-03	na	2.1E-03	1.3E-01	9.5E-04	na	2.1E-04	1.3E-01	9.9E-04	na	2.1E-04	1.3E-01	9.9E-04	na	2.1E-04
Iron	0	5.2E-01	3.8E-03	na	1.1E-03	5.4E-01	3.9E-03	na	1.1E-03	1.3E-01	9.5E-04	na	1.1E-04	1.3E-01	9.9E-04	na	1.1E-04	1.3E-01	9.9E-04	na	1.1E-04
Isophorone[C]	0	–	–	na	7.7E-03	–	–	na	7.7E-03	–	–	na	7.7E-04	–	–	na	7.7E-04	–	–	na	7.7E-04
Isopropalin	0	–	–	na	2.6E+04	–	–	na	2.6E+04	–	–	na	2.6E+03	–	–	na	2.6E+03	–	–	na	2.6E+03
Lead	0	–	0.0E+00	na	–	–	0.0E+00	na	–	–	0.0E+00	na	–	–	0.0E+00	na	–	–	0.0E+00	na	–
Malathion	0	2.0E+01	2.3E+00	na	–	2.1E+01	2.4E+00	na	–	5.1E+00	6.8E-01	na	–	5.3E+00	6.0E-01	na	–	5.3E+00	6.0E-01	na	–
Manganese	0	–	1.0E-01	na	–	–	1.0E-01	na	–	–	2.5E-02	na	–	–	2.6E-02	na	–	–	2.6E-02	na	–
Mercury	0	–	–	na	–	–	–	na	–	–	–	na	–	–	–	na	–	–	–	na	–
Methyl Bromide	0	1.4E+00	7.7E-01	na	5.1E-02	1.4E+00	8.0E-01	na	5.9E-02	3.5E-01	1.9E-01	na	5.1E-03	3.6E-01	2.0E-01	na	5.9E-03	3.6E-01	2.0E-01	na	5.9E-03
Methoxychlor	0	–	–	na	4.0E+03	–	–	na	4.6E+03	–	–	na	4.0E+02	–	–	na	4.6E+02	–	–	na	4.6E+02
Mirex	0	–	3.0E-02	na	–	–	3.1E-02	na	–	–	7.5E-03	na	–	–	7.8E-03	na	–	–	7.8E-03	na	–
Monochlorobenzene	0	–	0.0E+00	na	–	–	0.0E+00	na	–	–	0.0E+00	na	–	–	0.0E+00	na	–	–	0.0E+00	na	–
Nickel	0	–	–	na	2.1E+04	–	–	na	2.4E+04	–	–	na	2.1E+03	–	–	na	2.4E+03	–	–	na	2.4E+03
Nitrate (as N)	0	5.6E+01	6.3E+00	na	4.6E+03	5.8E+01	6.5E+00	na	5.3E+03	1.4E+01	1.6E+00	na	4.6E+02	1.5E+01	1.6E+00	na	5.3E+02	1.5E+01	1.6E+00	na	5.3E+02
Nitrobenzene	0	–	–	na	–	–	–	na	–	–	–	na	–	–	–	na	–	–	–	na	–
N-Nitrosodimethylamine[C]	0	–	–	na	1.9E+03	–	–	na	2.2E+03	–	–	na	1.9E+02	–	–	na	2.2E+02	–	–	na	2.2E+02
N-Nitrosodiphenylamine[C]	0	–	–	na	8.1E+01	–	–	na	8.1E+01	–	–	na	8.1E+00	–	–	na	8.1E+00	–	–	na	8.1E+00
N-Nitrosodi-n-propylamine[C]	0	–	–	na	1.6E+02	–	–	na	1.6E+02	–	–	na	1.6E+01	–	–	na	1.6E+01	–	–	na	1.6E+01
Parathion	0	–	–	na	1.4E+01	–	–	na	1.4E+01	–	–	na	1.4E+00	–	–	na	1.4E+00	–	–	na	1.4E+00
PCB-1016	0	6.5E-02	1.3E-02	na	–	6.7E-02	1.4E-02	na	–	1.6E-02	3.3E-03	na	–	1.7E-02	3.4E-03	na	–	1.7E-02	3.4E-03	na	–
PCB-1221	0	–	1.4E-02	na	–	–	1.5E-02	na	–	–	3.5E-03	na	–	–	3.6E-03	na	–	–	3.6E-03	na	–
PCB-1232	0	–	1.4E-02	na	–	–	1.5E-02	na	–	–	3.5E-03	na	–	–	3.6E-03	na	–	–	3.6E-03	na	–
PCB-1242	0	–	1.4E-02	na	–	–	1.5E-02	na	–	–	3.5E-03	na	–	–	3.6E-03	na	–	–	3.6E-03	na	–
PCB-1248	0	–	1.4E-02	na	–	–	1.5E-02	na	–	–	3.5E-03	na	–	–	3.6E-03	na	–	–	3.6E-03	na	–
PCB-1254	0	–	1.4E-02	na	–	–	1.5E-02	na	–	–	3.5E-03	na	–	–	3.6E-03	na	–	–	3.6E-03	na	–
PCB-1260	0	–	1.4E-02	na	–	–	1.5E-02	na	–	–	3.5E-03	na	–	–	3.6E-03	na	–	–	3.6E-03	na	–
PCB Total[C]	0	–	–	na	1.7E-03	–	–	na	1.7E-03	–	–	na	1.7E-04	–	–	na	1.7E-04	–	–	na	1.7E-04

Parameter (ug/l unless noted)	Background Conc	Water Quality Criteria				Wasteload Allocations				Antidegradation Baseline				Antidegradation Allocations				Most Limiting Allocations			
		Acute	Chronic	HH (PWS)	HH	Acute	Chronic	HH (PWS)	HH	Acute	Chronic	HH (PWS)	HH	Acute	Chronic	HH (PWS)	HH	Acute	Chronic	HH (PWS)	HH
Pentachlorophenol C	0	1.4E+01	1.0E+01	na	8.2E+01	1.4E+01	1.1E+01	na	8.2E+01	3.4E+00	2.6E+00	na	8.2E+00	3.6E+00	2.7E+00	na	8.2E+00	3.6E+00	2.7E+00	na	8.2E+00
Phenol	0	--	--	na	4.6E+06	--	--	na	5.3E+06	--	--	na	4.6E+05	--	--	na	5.3E+05	--	--	na	5.3E+05
Benzene	0	--	--	na	1.1E+04	--	--	na	1.3E+04	--	--	na	1.1E+03	--	--	na	1.3E+03	--	--	na	1.3E+03
Radionuclides (pCi/l except Beta/Photon)	0	--	--	na	--	--	--	na	--	--	--	na	--	--	--	na	--	--	--	na	--
Gross Alpha Activity	0	--	--	na	1.5E+01	--	--	na	1.7E+01	--	--	na	1.5E+00	--	--	na	1.7E+00	--	--	na	1.7E+00
Beta and Photon Activity (mrem/yr)	0	--	--	na	4.0E+00	--	--	na	4.6E+00	--	--	na	4.0E-01	--	--	na	4.6E-01	--	--	na	4.6E-01
Strontium-90	0	--	--	na	8.0E+00	--	--	na	9.2E+00	--	--	na	8.0E-01	--	--	na	9.2E-01	--	--	na	9.2E-01
Tritium	0	--	--	na	2.0E+04	--	--	na	2.3E+04	--	--	na	2.0E+03	--	--	na	2.3E+03	--	--	na	2.3E+03
Selenium	0	2.0E+01	5.0E+00	na	1.1E+04	2.1E+01	5.2E+00	na	1.3E+04	5.0E+00	1.3E+00	na	1.1E+03	5.2E+00	1.3E+00	na	1.3E+03	5.2E+00	1.3E+00	na	1.3E+03
Silver	0	3.2E-01	--	na	--	3.3E-01	--	na	--	8.0E-02	--	na	--	8.2E-02	--	na	--	8.2E-02	--	na	--
Sulfate	0	--	--	na	--	--	--	na	--	--	--	na	--	--	--	na	--	--	--	na	--
1,1,2,2-Tetrachloroethane C	0	--	--	na	1.1E+02	--	--	na	1.1E+02	--	--	na	1.1E+01	--	--	na	1.1E+01	--	--	na	1.1E+01
Tetrachloroethylene C	0	--	--	na	8.9E+01	--	--	na	8.9E+01	--	--	na	8.9E+00	--	--	na	8.9E+00	--	--	na	8.9E+00
Thallium	0	--	--	na	6.3E+00	--	--	na	7.2E+00	--	--	na	6.3E-01	--	--	na	7.2E-01	--	--	na	7.2E-01
Toluene	0	--	--	na	2.0E+06	--	--	na	2.3E+05	--	--	na	2.0E+04	--	--	na	2.3E+04	--	--	na	2.3E+04
Total dissolved solids	0	--	--	na	--	--	--	na	--	--	--	na	--	--	--	na	--	--	--	na	--
Toxaphene C	0	7.3E-01	2.0E-04	na	7.5E-03	7.5E-01	2.1E-04	na	7.5E-03	1.8E-01	5.0E-05	na	7.5E-04	1.9E-01	5.2E-05	na	7.5E-04	1.9E-01	5.2E-05	na	7.5E-04
Tributyltin	0	4.6E-01	6.3E-02	na	--	4.7E-01	6.5E-02	na	--	1.2E-01	1.6E-02	na	--	1.2E-01	1.6E-02	na	--	1.2E-01	1.6E-02	na	--
1,2,4-Trichlorobenzene	0	--	--	na	9.4E+02	--	--	na	1.1E+03	--	--	na	9.4E+01	--	--	na	1.1E+02	--	--	na	1.1E+02
1,1,2-Trichloroethane C	0	--	--	na	4.2E+02	--	--	na	4.2E+02	--	--	na	4.2E+01	--	--	na	4.2E+01	--	--	na	4.2E+01
Trichloroethylene C	0	--	--	na	8.1E+02	--	--	na	8.1E+02	--	--	na	8.1E+01	--	--	na	8.1E+01	--	--	na	8.1E+01
2,4,6-Trichlorophenol C	0	--	--	na	6.5E+01	--	--	na	6.5E+01	--	--	na	6.5E+00	--	--	na	6.5E+00	--	--	na	6.5E+00
2-(2,4,5-Trichlorophenoxy) propionic acid (Silvex)	0	--	--	na	--	--	--	na	--	--	--	na	--	--	--	na	--	--	--	na	--
Vinyl Chloride C	0	--	--	na	6.1E+01	--	--	na	6.1E+01	--	--	na	6.1E+00	--	--	na	6.1E+00	--	--	na	6.1E+00
Zinc	0	3.6E+01	3.7E+01	na	6.9E+04	3.7E+01	3.8E+01	na	7.9E+04	9.1E+00	9.1E+00	na	6.9E+03	9.3E+00	9.5E+00	na	7.9E+03	9.3E+00	9.5E+00	na	7.9E+03

Notes:

1. All concentrations expressed as micrograms/liter (ug/l), unless noted otherwise
2. Discharge flow is highest monthly average or Form 2C maximum for Industries and design flow for Municipals
3. Metals measured as Dissolved, unless specified otherwise
4. "C" indicates a carcinogenic parameter
5. Regular WLAs are mass balances (minus background concentration) using the % of stream flow entered above under Mixing Information.
   Antidegradation WLAs are based upon a complete mix.
6. Antideg. Baseline = [0.25(WQC - background conc.) + background conc.] for acute and chronic
   = [0.1(WQC - background conc.) + background conc.] for human health
7. WLAs established at the following stream flows: 1Q10 for Acute, 30Q10 for Chronic Ammonia, 7Q10 for Other Chronic, 30Q5 for Non-carcinogens, Harmonic Mean for Carcinogens, and Annual Average for Dioxin. Mixing ratios may be substituted for stream flows where appropriate.

Metal	Target Value (SSTV)
Antimony	4.9E+02
Arsenic	2.3E+01
Barium	na
Cadmium	6.0E-02
Chromium III	2.7E+00
Chromium VI	1.7E+00
Copper	3.6E-01
Iron	na
Lead	3.6E-01
Manganese	na
Mercury	5.9E-03
Nickel	9.6E-01
Selenium	7.8E-01
Silver	3.3E-02
Zinc	3.7E+00

Note: do not use QL's lower than the minimum QL's provided in agency guidance

Attachment 8

Threatened and Endangered Species Query

Species List Report

List of species known or likely to occur within a **10 mile radius of 37,20,15.8 77,56,1.8** in **007 Amelia, 041 Chesterfield, 135 Nottoway, 145 Powhatan, VA.** This report is compiled on 12/12/2005,2:25:47 PM

1-102 Species Records

Bova Code	Status*	Common Name	Scientific Name	Confirmed	Database(s)
060003	FESE	Wedgemussel, dwarf	Alasmidonta heterodon	No	BOVA
060006	FSSE	Floater, brook	Alasmidonta varicosa	No	BOVA
060029	FSSS	Lance, yellow	Elliptio lanceolata	No	BOVA
060084	FS	Pigtoe, Virginia	Lexingtonia subplana	No	BOVA
010032	FSSS	Sturgeon, Atlantic	Acipenser oxyrhynchus	No	BOVA
060173	FSST	Pigtoe, Atlantic	Fusconaia masoni	No	BOVA
070105	FS	Crayfish, Chowanoke	Orconectes virginiensis	No	BOVA
010070	ST	Shiner, whitemouth	Notropis alborus	No	BOVA
010077	SS	Shiner, bridle	Notropis bifrenatus	Yes	Collections
010080		Shiner, common	Luxilus cornutus	Yes	Collections
010082		Shiner, spottail	Notropis hudsonius	Yes	Collections
010086		Shiner, swallowtail	Notropis procne	Yes	Collections
010087		Shiner, rosyface	Notropis rubellus	Yes	Collections
010099		Minnow, bluntnose	Pimephales notatus	No	BOVA
010101		Dace, blacknose	Rhinichthys atratulus	Yes	Collections
010102		Dace, longnose	Rhinichthys cataractae	Yes	Collections
010103		Chub, creek	Semotilus	Yes	Collections

			atromaculatus		
010104		Fallfish	Semotilus corporalis	Yes	Collections
010105		Sucker, white	Catostomus commersoni	Yes	Collections
010106		Chubsucker, creek	Erimyzon oblongus	Yes	Collections
010108		Sucker, northern hog	Hypentelium nigricans	Yes	Collections
010113		Redhorse, v-lip	Moxostoma pappillosum	No	BOVA
010114		Redhorse, golden	Moxostoma erythrurum	No	BOVA
010116		Redhorse, shorthead	Moxostoma macrolepidotum	No	BOVA
010118		Sucker, torrent	Moxostoma rhothoecum	Yes	Collections
010120		Catfish, white	Ameiurus catus	Yes	Collections
010122		Bullhead, yellow	Ameiurus natalis	Yes	Collections
010123		Bullhead, brown	Ameiurus nebulosus	Yes	Collections
010125		Catfish, channel	Ictalurus punctatus	Yes	Collections
010129		Madtom, margined	Noturus insignis	Yes	Collections
010131		Eel, American	Anguilla rostrata	Yes	Collections
010143		Killifish, banded	Fundulus diaphanus	No	BOVA
010148		Mosquitofish, eastern	Gambusia holbrooki	Yes	Collections
010163		Perch, pirate	Aphredoderus sayanus sayanus	Yes	Collections
010166		Perch, white	Morone americana	Yes	Collections
010168		Bass, striped	Morone saxatilis	Yes	Collections
010173		Sunfish, mud	Acantharchus pomotis	Yes	Collections
010176		Flier	Centrarchus macropterus	Yes	Collections
010177		Warmouth	Lepomis	Yes	Collections

			gulosus		
010178		Sunfish, bluespotted	Enneacanthus gloriosus	Yes	Collections
010179		Sunfish, banded	Enneacanthus obesus	No	BOVA
010180		Sunfish, redbreast	Lepomis auritus	Yes	Collections
010181		Sunfish, green	Lepomis cyanellus	No	BOVA
010182		Pumpkinseed	Lepomis gibbosus	Yes	Collections
010183		Bluegill	Lepomis macrochirus	Yes	Collections
010185		Sunfish, redear	Lepomis microlophus	Yes	Collections
010186		Bass, smallmouth	Micropterus dolomieu	No	BOVA
010187		Bass, spotted	Micropterus punctulatus	Yes	Collections
010188		Bass, largemouth	Micropterus salmoides	Yes	Collections
010190		Crappie, black	Pomoxis nigromaculatus	Yes	Collections
010193		Darter, fantail	Etheostoma flabellare	Yes	Collections
010194		Darter, swamp	Etheostoma fusiforme	Yes	Collections
010198		Darter, johnny	Etheostoma nigrum	Yes	Collections
010204		Darter, glassy	Etheostoma vitreum	Yes	Collections
010206		Perch, yellow	Perca flavescens	Yes	Collections
010211		Darter, stripeback	Percina notogramma	Yes	Collections
010213		Darter, shield	Percina peltata	Yes	Collections
010366		Dace, rosyside	Clinostomus funduloides	Yes	Collections
010374		Quillback	Carpiodes cyprinus	Yes	Collections
010397		Darter, tessellated	Etheostoma olmstedi	Yes	Collections
010408		Minnow, eastern silvery	Hybognathus regius	Yes	Collections

010071		Shiner, highfin	Notropis altipinnis	No	BOVA
010072		Shiner, comely	Notropis amoenus	Yes	Collections
010073		Shiner, satinfin	Cyprinella analostana	Yes	Collections
010074		Shiner, rosefin	Lythrurus ardens	Yes	Collections
060013		Mussel, paper pondshell	Utterbackia imbecillis	No	BOVA
060016		Campeloma, pointed	Campeloma decisum	Yes	Collections
060025		Mussel, eastern elliptio	Elliptio complanata	Yes	Collections
060134		Snail, crested mudalia	Leptoxis carinata	Yes	Collections
060137		Mussel, creeper	Strophitus undulatus	Yes	Collections
060145		Mussel, notched rainbow	Villosa constricta	No	BOVA
060156		Mussel, giant floater	Pyganodon grandis	No	BOVA
060157		Mussel, alewife floater	Anodonta implicata	No	BOVA
060159		Mussel, Carolina lance	Elliptio angustata	Yes	Collections
010033		Gar, longnose	Lepisosteus osseus	Yes	Collections
010034		Bowfin	Amia calva	No	BOVA
010038		Alewife	Alosa pseudoharengus	Yes	Collections
010040		Shad, American	Alosa sapidissima	Yes	Collections
010041		Shad, gizzard	Dorosoma cepedianum	Yes	Collections
010045		Herring, blueback	Alosa aestivalis	Yes	Collections
010054		Mudminnow, eastern	Umbra pygmaea	Yes	Collections
010055		Pickerel, redfin	Esox americanus americanus	No	BOVA
010056		Pickerel, chain	Esox niger	Yes	Collections
010058		Stoneroller, central	Campostoma anomalum	No	BOVA

010059		Goldfish	Carassius auratus	No	BOVA
010060		Dace, mountain redbelly	Phoxinus oreas	Yes	Collections
010061		Darter, Roanoke	Percina roanoka	No	BOVA
010062		Carp, common	Cyprinus carpio	Yes	Collections
010066		Chub, bluehead	Nocomis leptocephalus	Yes	Collections
010067		Chub, river	Nocomis micropogon	Yes	Collections
010068		Shiner, golden	Notemigonus crysoleucas	Yes	Collections
010069		Shiner, white	Luxilus albeolus	Yes	Collections
070120		CRAYFISH, WHITE RIVER	Procambarus acutus	No	BOVA
070126		CRAYFISH	Fallicambarus fodiens	No	BOVA
060177		Clam, Asian	Corbicula fluminea	Yes	Collections
070093		Crayfish, no common name	Cambarus longulus	No	BOVA
070094		Crayfish, no common name	Cambarus acuminatus	No	BOVA
070095		Crayfish, devil	Cambarus diogenes diogenes	No	BOVA
070098		Crayfish, spiny cheek	Orconectes limosus	No	BOVA
070099		Crayfish	Fallicambarus uhleri	No	BOVA
070102		Crayfish, Appalachian brook	Cambarus bartonii bartonii	No	BOVA
070103		Crayfish	Orconectes spinosus	No	BOVA

*FE=Federal Endangered; FT=Federal Threatened; FC=Federal Candidate; FS=Federal Species of Concern (not a legal status; list maintained by USFWS Virginia Field Office); SE=State Endangered; ST=State Threatened; SS=State Special Concern (not a legal status).

APPENDIX B.

Ammonia limit determination for high flow tiers.

5/12/2006 11:13:57 AM

Facility = Amelia Courthouse STP--High Flow Tier
Chemical = Ammonia
Chronic averaging period = 30
WLAa = 10
WLAc = 2.5
Q.L. = 0.2
# samples/mo. = 1
# samples/wk. = 1

Summary of Statistics:

observations = 1
Expected Value = 9
Variance = 29.16
C.V. = 0.6
97th percentile daily values = 21.9007
97th percentile 4 day average = 14.9741
97th percentile 30 day average= 10.8544
< Q.L. = 0
Model used = BPJ Assumptions, type 2 data

A limit is needed based on Chronic Toxicity
Maximum Daily Limit = 5.04417523354078
Average Weekly limit = 5.04417523354078
Average Monthly LImit = 5.04417523354078

The data are:

9