BOARD OF SUPERVISORS
FRANKLIN D. HARRIS
CHAIRMAN
Election District 5
ELLSWORTH J. "JIM" BENNETT
VICE CHAIRMAN
Election District 1
WELDON D. "SKIP" HALL
Election District 2
RALPH A. WHITAKER, JR.
Election District 3
J. PHILLIP AMISS, JR.
Election District 4

COUNTY OF AMELIA

PHILIP T. VANNOORBEECK
COUNTY ADMINISTRATOR

16360 Dunn Street, Suite 101
Post Office Box A
Amelia Court House, Virginia 23002

Telephone: (804) 561-3039
Facsimile: (804) 561-6039

June 15, 2006

RECEIVED
JUN 16 2006
PRO

Mr. Jared Morton
Department of Environmental Quality
Piedmont Regional Office
4949-A Cox Road
Glen Allen, Virginia 23060-6295

RE: VPDES Permit Application
Amelia County's Proposed STP

Dear Mr. Morton:

Please find enclosed the Permit Application Fee Form, a copy of check no. 47195 in the amount of $13,800 and four (4) copies of the VPDES Permit Application. We have retained one (1) copy of the Application for our files.

Thank you for your assistance.

Sincerely,

Norma Duty

Norma Duty
Assistant County Administrator

/nd

Enclosure

DEPARTMENT OF ENVIRONMENTAL QUALITY
WATER QUALITY DIVISION
PERMIT APPLICATION FEE FORM
EFFECTIVE JULY 1, 2004

COPY

INSTRUCTIONS

Applicants for individual Virginia Pollutant Discharge Elimination System (VPDES), Virginia Pollution Abatement (VPA), Virginia Water Protection (VWP), Surface Water Withdrawal (SWW), and Ground Water Withdrawal (GWW) Permits are required to pay permit application fees, except farming operations engaged in production for market. Fees are also required for registration for coverage under General Permits except for the general permits for sewage treatment systems with discharges of 1,000 gallons per day (GPD) or less and for Corrective Action Plans for leaking underground storage tanks. Except for VWP permits, fees must be paid when applications for permit issuance, reissuance* or modification are submitted. Applicants for VWP permits will be notified by the DEQ of the fee due. Applications will be considered incomplete if the proper fee is not paid and will not be processed until the fee is received. (* - the reissuance fee does not apply to VPDES and VPA permits - see the fee schedule included with this form for details.)

The permit fee schedule is included with this form. Fees for permit issuance or reissuance and for permit modification are included. Once you have determined the fee for the type of application you are submitting, complete this form. The original copy of the form and your check or money order payable to "Treasurer of Virginia" should be mailed to:

Department of Environmental Quality
Receipts Control
P.O. Box 10150
Richmond, VA 23240

A copy of the form and a copy of your check or money order should accompany the permit application. You should retain a copy for your records. Please direct any questions regarding this form or fee payment to the DEQ Office to which you are submitting your application.

APPLICANT NAME: Amelia County

SSN/FIN: 54-6002281

ADDRESS: PO Box A
Amelia, VA 23002

DAYTIME PHONE: (804)561-3039
Area Code

FACILITY/ACTIVITY NAME: Amelia Courthouse Sanitary District STP

LOCATION: Route 627 and Smacks Creek

TYPE OF PERMIT APPLIED FOR (from Fee Schedule): Municipal, Major

TYPE OF ACTION: New IssuanceX Reissuance ☐ Modification ☐

AMOUNT OF FEE SUBMITTED (from Fee Schedule): $21,300

EXISTING PERMIT NUMBER (if applicable): NA

DEQ OFFICE TO WHICH APPLICATION SUBMITTED (check one)

☐ Abingdon/SWRO	☐ Harrisonburg/VRO	☐ Woodbridge/NVRO	☐ Lynchburg/SCRO
☒ Richmond/PRO	☐ Richmond/Headquarters	☐ Roanoke/WCRO	☐ Virginia Beach/TRO

FOR DEQ USE ONLY
Date:_____
DC #:_____

Original Form and Check - DEQ Receipts Control, Richmond
Copy of Form and Copy of Check - DEQ Regional Office or Permit Program Office

County of Amelia
ck dated 06/15/2006 $13,800.00
Application Fee VPDES Permit Proposed STP

0047195

ORIGINAL DOCUMENT PRINTED ON CHEMICAL REACTIVE PAPER WITH MICROPRINTED BORDER - SEE REVERSE SIDE FOR COMPLETE SECURITY FEATURES

COUNTY OF AMELIA
P. O. BOX A • AMELIA, VIRGINIA 23002
Phone (804) 561-3039

WACHOVIA
68-54/514

0047195
NO.

Thirteen Thousand Eight Hundred and 00/100*

DATE
06/15/2006

AMOUNT
$13,800.00

PAY TO THE ORDER OF
Treasurer of Virginia
Department of Environmental Quality
Receipts Control
Post Office Box 10150
Richmond, Virginia 23240

BY ORDER OF BOARD OF SUPERVISORS

Norma Jean Dietz
COUNTY ADMINISTRATOR

Pamela H. Conyer
COUNTY TREASURER

SAFEGUARD SECURE

THIS DOCUMENT CONTAINS HEAT SENSITIVE INK. TOUCH OR PRESS HERE - RED IMAGE DISAPPEARS WITH HEAT.

⑈047195⑈ ⑆051400549⑆ 2000211000512⑈

B & B Consultants, Inc.

Engineers - Surveyors - Laboratory Analysts - Plant Operators
Environmental Services

P. O. B[illegible] 212 E. Ferrell Street
[illegible] Va. 23970
(434) [illegible] (434) 447-4257
ema[illegible]bandb@[illegible].com

RECEIVED
JUN 0 2 2006
COUNTY ADMINISTRATOR

MEMO

TO: Philip Vannoorbeeck
Administrator, County of Amelia

FROM: Henry M. Bugg, Ph.D., P.E., L.S.

DATE: June 1, 1006

SUBJECT: Revised VPDES Permit Application for Proposed STP

Enclosed is the VPDES Permit Application for Amelia County's proposed STP revised to show 0.999, 2.0 and 3.0 MGD. After signing all five copies at the ~~green~~ orange tabs, you need to:

- Mail the Permit Application Fee Form and a check made payable to the "Treasurer of Virginia" in the amount of $13,800 to:
  Department of Environmental Quality
  Receipts Control
  PO Box 10150
  Richmond, VA 23240
  (This check is in addition to the $7,500 check submitted with the original application in 2005.)

- Mail a copy of the Permit Application Fee Form, a copy of the check and the ~~three~~ (~~3~~) four 4 copies of the VPDES Permit Application to:
  Department of Environmental Quality
  Piedmont Regional Office
  4949-A Cox Road
  Glen Allen, VA 23060-6295
  Attn: Jared Morton

- Retain the remaining copy of the VPDES Permit Application for your records.

Please advise of any questions you may have.

FACILITY NAME AND PERMIT NUMBER:	PERMIT ACTION REQUESTED:	RIVER BASIN:
Amelia Courthouse Sanitary District STP,		James River

BASIC APPLICATION INFORMATION

PART A. BASIC APPLICATION INFORMATION FOR ALL APPLICANTS:

All treatment works must complete questions A.1 through A.8 of this Basic Application Information Packet.

A.1. Facility Information.

Facility Name: Amelia Courthouse Sanitary District STP

Mailing Address: Post Office Box A
Amelia, Virginia 23002

Contact Person: Philip Vannoorbeeck

Title: County Administrator

Telephone Number: (804) 561-3039

Facility Address (not P.O. Box): Intersection of Smacks Creek and Route 627
Amelia County, Virginia

A.2. Applicant Information. If the applicant is different from the above, provide the following:

Applicant Name: County of Amelia

Mailing Address: Post Office Box A
Amelia, VA 23002

Contact Person: Philip Vannoorbeeck

Title: County Administrator

Telephone Number: (804) 561-3039

Is the applicant the owner or operator (or both) of the treatment works?

X owner ☐ operator

Indicate whether correspondence regarding this permit should be directed to the facility or the applicant.

☐ facility X applicant

A.3. Existing Environmental Permits. Provide the permit number of any existing environmental permits that have been issued to the treatment works (include state-issued permits).

NPDES	VA0086681 – different site (future abandonment)	PSD	
UIC		Other	
RCRA		Other	

A.4. Collection System Information. Provide information on municipalities and areas served by the facility. Provide the name and population of each entity and, if known, provide information on the type of collection system (combined vs. separate) and its ownership (municipal, private, etc.).

Name	Population Served	Type of Collection System	Ownership
		Separate	Amelia Sanitary District

Total population served Proposed 5,000; 10,000; 15,000

FACILITY NAME AND PERMIT NUMBER:	PERMIT ACTION REQUESTED:	RIVER BASIN:
Amelia Courthouse Sanitary District STP,		**James River**

A.5. Indian Country.

a. Is the treatment works located in Indian Country?

☐ Yes x No

b. Does the treatment works discharge to a receiving water that is either in Indian Country or that is upstream from (and eventually flows through) Indian Country?

☐ Yes x No

A.6. Flow. Indicate the design flow rate of the treatment plant (i.e., the wastewater flow rate that the plant was built to handle). Also provide the average daily flow rate and maximum daily flow rate for each of the last three years. Each year's data must be based on a 12-month time period with the 12th month of "this year" occurring no more than three months prior to this application submittal.

a. Design flow rate **0.999, 2.0 and 3.0** mgd

	Two Years Ago	Last Year	This Year
b. Annual average daily flow rate	**N/A – Proposed STP**		
c. Maximum daily flow rate			

A.7. Collection System. Indicate the type(s) of collection system(s) used by the treatment plant. Check all that apply. Also estimate the percent contribution (by miles) of each.

X Separate sanitary sewer **100** %

☐ Combined storm and sanitary sewer ____ %

A.8. Discharges and Other Disposal Methods.

a. Does the treatment works discharge effluent to waters of the U.S.? x Yes ☐ No

If yes, list how many of each of the following types of discharge points the treatment works uses:

i. Discharges of treated effluent **X**

ii. Discharges of untreated or partially treated effluent **N/A**

iii. Combined sewer overflow points **N/A**

iv. Constructed emergency overflows (prior to the headworks) **N/A**

v. Other ____ **N/A**

b. Does the treatment works discharge effluent to basins, ponds, or other surface impoundments that do not have outlets for discharge to waters of the U.S.? ☐ Yes X No

If yes, provide the following for each surface impoundment:

Location: ____

Annual average daily volume discharge to surface impoundment(s) **zero** mgd

Is discharge X continuous or ☐ intermittent?

c. Does the treatment works land-apply treated wastewater? ☐ Yes X No

If yes, provide the following for each land application site:

Location: ____

Number of acres: ____

Annual average daily volume applied to site: ____ mgd

Is land application ☐ continuous or ☐ intermittent?

d. Does the treatment works discharge or transport treated or untreated wastewater to another treatment works? ☐ Yes X No

FACILITY NAME AND PERMIT NUMBER:	PERMIT ACTION REQUESTED:	RIVER BASIN:
Amelia Courthouse Sanitary District STP,		James River

If yes, describe the mean(s) by which the wastewater from the treatment works is discharged or transported to the other treatment works (e.g., tank truck, pipe).

N/A

If transport is by a party other than the applicant, provide: N/A

Transporter Name

Mailing Address

Contact Person

Title

Telephone Number ( )

For each treatment works that receives this discharge, provide the following: N/A

Name

Mailing Address

Contact Person

Title

Telephone Number ( )

If known, provide the NPDES permit number of the treatment works that receives this discharge

Provide the average daily flow rate from the treatment works into the receiving facility. mgd

e. Does the treatment works discharge or dispose of its wastewater in a manner not included in A.8. through A.8.d above (e.g., underground percolation, well injection): ☐ Yes X No

If yes, provide the following for each disposal method:

Description of method (including location and size of site(s) if applicable):

Annual daily volume disposed by this method: N/A

Is disposal through this method ☐ continuous or ☐ intermittent?

FACILITY NAME AND PERMIT NUMBER:	PERMIT ACTION REQUESTED:	RIVER BASIN:
Amelia Courthouse Sanitary District STP,		James River

WASTEWATER DISCHARGES:

If you answered "Yes" to question A.8.a, complete questions A.9 through A.12 once for each outfall (including bypass points) through which effluent is discharged. Do not include information on combined sewer overflows in this section. If you answered "No" to question A.8.a, go to Part B, "Additional Application Information for Applicants with a Design Flow Greater than or Equal to 0.1 mgd."

A.9. Description of Outfall.

a. Outfall number 001 (Proposed)

b. Location Amelia Courthouse (City or town, if applicable) 23002 (Zip Code)

Amelia (County) VA (State)

N37°-20'-15.8" (Latitude) W77°-56'-1.8" (Longitude)

c. Distance from shore (if applicable) N/A ft.

d. Depth below surface (if applicable) N/A ft.

e. Average daily flow rate 0.999, 2.0 and 3.0 mgd

f. Does this outfall have either an intermittent or a periodic discharge? ☐ Yes X No (go to A.9.g.)

If yes, provide the following information:

Number f times per year discharge occurs: _____

Average duration of each discharge: _____

Average flow per discharge: _____ mgd

Months in which discharge occurs: _____

g. Is outfall equipped with a diffuser? ☐ Yes X No

A.10. Description of Receiving Waters.

a. Name of receiving water Smacks Creek

b. Name of watershed (if known) Appomattox River/James River

United States Soil Conservation Service 14-digit watershed code (if known): _____

c. Name of State Management/River Basin (if known): James River

United States Geological Survey 8-digit hydrologic cataloging unit code (if known): _____

d. Critical low flow of receiving stream (if applicable)

acute _____ cfs chronic _____ cfs

e. Total hardness of receiving stream at critical low flow (if applicable): _____ mg/l of $CaCO_3$

FACILITY NAME AND PERMIT NUMBER:	PERMIT ACTION REQUESTED:	RIVER BASIN:
Amelia Courthouse Sanitary District STP,		James River

A.11. Description of Treatment

a. What level of treatment are provided? Check all that apply.

☐ Primary ☐ Secondary

X Advanced ☐ Other. Describe: _____

b. Indicate the following removal rates (as applicable):

Design BOD5 removal or Design CBOD5 removal	96	%
Design SS removal	96	%
Design P removal	94	%
Design N removal	99	%
Other _____	---	%

c. What type of disinfection is used for the effluent from this outfall? If disinfection varies by season, please describe:

UV

If disinfection is by chlorination is dechlorination used for this outfall? ☐ Yes ☐ No

Does the treatment plant have post aeration? X Yes ☐ No

A.12. Effluent Testing Information. All Applicants that discharge to waters of the US must provide effluent testing data for the following parameters. Provide the indicated effluent testing required by the permitting authority for each outfall through which effluent is discharged. Do not include information on combined sewer overflows in this section. All information reported must be based on data collected through analysis conducted using 40 CFR Part 136 methods. In addition, this data must comply with QA/QC requirements of 40 CFR Part 136 and other appropriate QA/QC requirements for standard methods for analytes not addressed by 40 CFR Part 136. At a minimum, effluent testing data must be based on at least three samples and must be no more than four and one-half years apart.

Outfall number: 001 (Proposed)

PARAMETER	MAXIMUM DAILY VALUE		AVERAGE DAILY VALUE			
	Value	Units	Value	Units	Number of Samples	
pH (Minimum)	6.0	s.u.				
pH (Maximum)	9.0	s.u.				
Flow Rate	0.999, 2.0 and 3.0	MGD	NA	NA	NA	
Temperature (Winter)	9°	C	13°	C	12 months	(1)
Temperature (Summer)	27°	C	24°	C	12 months	(1)

* For pH please report a minimum and a maximum daily value

POLLUTANT		MAXIMUM DAILY DISCHARGE		AVERAGE DAILY DISCHARGE			ANALYTICAL METHOD	ML/MDL	
		Conc.	Units	Conc.	Units	Number of Samples			
CONVENTIONAL AND NON CONVENTIONAL COMPOUNDS									
BIOCHEMICAL OXYGEN DEMAND (Report one)	BOD5	-	-	-	-				
	CBOD5	7 (EST)	mg/l	4.0	mg/l	12 mos	Standard		(1)
FECAL COLIFORM		N/A	N/A	200 n/100					
TOTAL SUSPENDED SOLIDS (TSS)		7 (EST)	mg/l	2.4	mg/l	12 mos	Standard		

END OF PART A.
REFER TO THE APPLICATION OVERVIEW (PAGE 1) TO DETERMINE WHICH OTHER PARTS OF FORM 2A YOU MUST COMPLETE

(1) See attached data of North Cary, NC, Louisburg,NC, Hoillister, MO and Titusville, FL

FACILITY NAME AND PERMIT NUMBER:	PERMIT ACTION REQUESTED:	RIVER BASIN:
Amelia Courthouse Sanitary District STP,		James River

BASIC APPLICATION INFORMATION

PART B. ADDITIONAL APPLICATION INFORMATION FOR APPLICANTS WITH A DESIGN FLOW GREATER THAN OR EQUAL TO 0.1 MGD (100,000 gallons per day).

All applicants with a design flow rate ≥ 0.1 mgd must answer questions B.1 through B.6. All others go to Part C (Certification).

B.1. Inflow and Infiltration. Estimate the average number of gallons per day that flow into the treatment works from inflow and/or infiltration.

40,000 gpd

Briefly explain any steps underway or planned to minimize inflow and infiltration.

Most of the flow to the proposed STP will be from new sewers requiring contractor leakage testing to very low leakage rates.

B.2. Topographic Map. Attach to this application a topographic map of the area extending at least one mile beyond facility property boundaries. This map must show the outline of the facility and the following information. (You may submit more than one map if one map does not show the entire area.)

a. The area surrounding the treatment plant, including all unit processes.

b. The major pipes or other structures through which wastewater enters the treatment works and the pipes or other structures through which treated wastewater is discharged from the treatment plant. Include outfalls from bypass piping, if applicable.

c. Each well where wastewater from the treatment plant is injected underground.

d. Wells, springs, other surface water bodies, and drinking water wells that are: 1) within ¼ mile of the property boundaries of the treatment works, and 2) listed in public record or otherwise known to the applicant.

e. Any areas where the sewage sludge produced by the treatment works is stored, treated, or disposed.

f. If the treatment works receives waste that is classified as hazardous under the Resource Conservation and Recovery Act (RCRA) by truck, rail, or special pipe, show on the map where the hazardous waste enters the treatment works and where it is treated, stored, and/or disposed.

B.3. Process Flow Diagram or Schematic. Provide a diagram showing the processes of the treatment plant, including all bypass piping and all backup power sources or redunancy in the system. Also provide a water balance showing all treatment units, including disinfection (e.g., chlorination and dechlorination). The water balance must show daily average flow rates at influent and discharge points and approximate daily flow rates between treatment units. Include a brief narrative description of the diagram.

B.4. Operation/Maintenance Performed by Contractor(s).

Are any operational or maintenance aspects (related to wastewater treatment and effluent quality) of the treatment works the responsibility of a contractor? ☐ Yes X No

If yes, list the name, address, telephone number, and status of each contractor and describe the contractor's responsibilities (attach additional pages if necessary).

Name: _____

Mailing Address: _____

_____

Telephone Number: ( ) _____

Responsibilities of Contractor: _____

B.5. Scheduled improvements and Schedules of Implementation. Provide information on any uncompleted implementation schedule or uncompleted plans for improvements that will affect the wastewater treatment, effluent quality, or design capacity of the treatment works. If the treatment works has several different implementation schedules or is planning several improvements, submit separate responses to question B.5 for each. (If none, go to question B.6.)

a. List the outfall number (assigned in question A.9) for each outfall that is covered by this implementation schedule.

001 (Proposed)

b. Indicate whether the planned improvements or implementation schedule are required by local, State, or Federal agencies.

☐ Yes X No

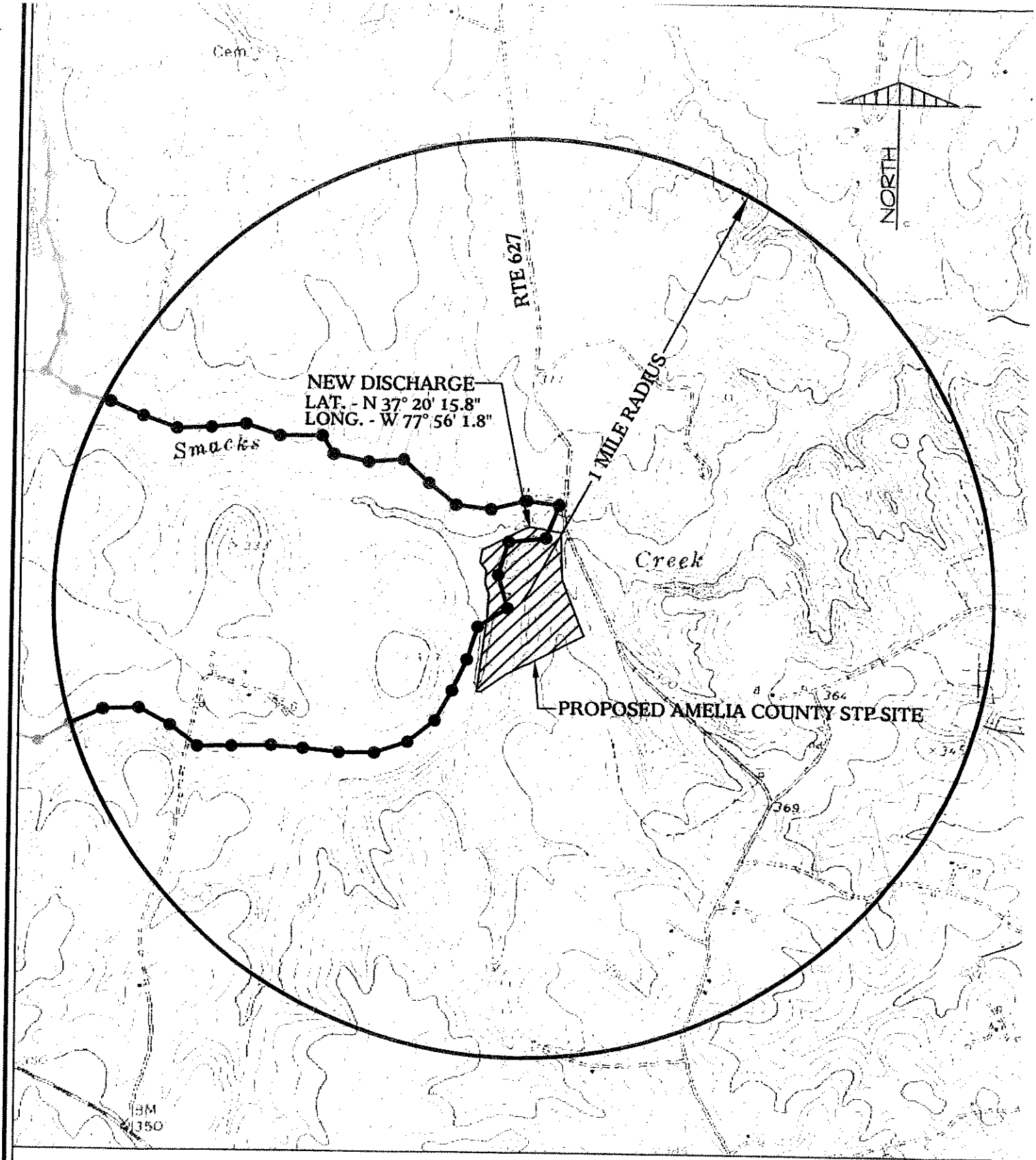

VICINITY MAP

USGS QUADRANGLE:
AMELIA COURT HOUSE, VA.

PREPARED BY:

B & B Consultants, Inc.
Engineers - Surveyors - Lab Analysts -
Plant Operators - Environmental Services
Chase City & South Hill, Virginia

0 750 1,500 3,000 4,500

SCALE: 1" = 1,500'

FACILITY NAME AND PERMIT NUMBER:	PERMIT ACTION REQUESTED:	RIVER BASIN:
Amelia Courthouse Sanitary District STP,		James River

c. If the answer to B.5.b is "Yes," briefly describe, including new maximum daily inflow rate (if applicable).

d. Provide dates imposed by any compliance schedule or any actual dates of completion for the implementation steps listed below, as applicable. For improvements planned independently of local, State, or Federal agencies, indicate planned or actual completion dates, as applicable. Indicate dates as accurately as possible.

Implementation Stage	Schedule MM/DD/YYYY	Actual Completion MM/DD/YYYY
- Begin Construction	09/01/2006	/ /
- End Construction	12/01/2007	/ /
- Begin Discharge	12/10/2007	/ /
- Attain Operational Level	03/15/2008	/ /

e. Have appropriate permits/clearances concerning other Federal/State requirements been obtained? ☐ Yes X No

Describe briefly:

B.6. EFFLUENT TESTING DATA (GREATER THAN 0.1 MGD ONLY).

Applicants that discharge to waters of the US must provide effluent testing data for the following parameters. Provide the indicated effluent testing required by the permitting authority for each outfall through which effluent is discharged. Do not include information on combine sewer overflows in this section. All information reported must be based on data collected through analysis conducted using 40 CFR Part 136 methods. In addition, this data must comply with QA/QC requirements of 40 CFR Part 136 and other appropriate QA/QC requirements for standard methods for analytes not addressed by 40 CFR Part 136. At a minimum effluent testing data must be based on at least three pollutant scans and must be no more than four and on-half years old.

Outfall Number: (Proposed STP)

POLLUTANT	MAXIMUM DAILY DISCHARGE		AVERAGE DAILY DISCHARGE			ANALYTICAL METHOD	ML/MDL
	Conc.	Units	Conc.	Units	Number of Samples		
CONVENTIONAL AND NON CONVENTIONAL COMPOUNDS							
AMMONIA (as N)							
CHLORINE (TOTAL RESIDUAL, TRC)							
DISSOLVED OXYGEN							
TOTAL KJELDAHL NITROGEN (TKN)							
NITRATE PLUS NITRITE NITROGEN							
OIL and GREASE							
PHOSPHORUS (Total)							
TOTAL DISSOLVED SOLIDS (TDS)							
OTHER							

END OF PART B.
REFER TO THE APPLICATION OVERVIEW (PAGE 1) TO DETERMINE WHICH OTHER PARTS OF FORM 2A YOU MUST COMPLETE

FACILITY NAME AND PERMIT NUMBER:	PERMIT ACTION REQUESTED:	RIVER BASIN:
Amelia Courthouse Sanitary District STP,		James River

BASIC APPLICATION INFORMATION

PART C. CERTIFICATION

All applicants must complete the Certification Section. Refer to instructions to determine who is an officer for the purposes of this certification. All applicants must complete all applicable sections of Form 2A, as explained in the Application Overview. Indicate below which parts of Form 2A you have completed and are submitting. By signing this certification statement, applicants confirm that they have reviewed Form 2A and have completed all sections that apply to the facility for which this application is submitted.

Indicate which parts of Form 2A you have completed and are submitting:

X Basic Application Information packet

Supplemental Application Information packet:

- ☐ Part D (Expanded Effluent Testing Data)
- ☐ Part E (Toxicity Testing: Biomonitoring Data)
- ☐ Part F (Industrial User Discharges and RCRA/CERCLA Wastes)
- ☐ Part G (Combined Sewer Systems)

ALL APPLICANTS MUST COMPLETE THE FOLLOWING CERTIFICATION.

I certify under penalty of law that this document and all attachments were prepared under my direction or supervision in accordance with a system designed to assure that qualified personnel properly gather and evaluate the information submitted. Based on my inquiry of the person or persons who manage the system or those persons directly responsible for gathering the information, the information is, to the best of my knowledge and belief, true, accurate, and complete. I am aware that there are significant penalties for submitting false information, including the possibility of fine and imprisonment for knowing violations.

Name and official title: Philip Vannoorbeeck, County Administrator

Signature: Philip V

Telephone number: (804) 561-3039

Date signed: 6/2/06

Upon request of the permitting authority, you must submit any other information necessary to assure wastewater treatment practices at the treatment works or identify appropriate permitting requirements.

SEND COMPLETED FORMS TO:

NCDENR/ DWQ
Attn: NPDES Unit
1617 Mail Service Center
Raleigh, North Carolina 27699-1617

Kruger Ditch Performance Data for Biological Nitrogen & Phosphorus Removal

Hollister WWTP - Hoillister, MO 3.2 MGD

Month	Ave. Flow MGD	BOD (mg/l)		TSS (mg/l)		TP (mg/l)	
		In	Out	In	Out	In	Out
Mar-97	0.6627		2.3	642	8.0	4.2	0.31
Apr-97	0.5816	87	1.8	86	3.7	6.3	0.39
May-97	0.5160	135	1.8	251	5.0	5.1	0.32
Jun-97	0.5126	221	1.3	158	1.6	4.9	0.21
Jul-97	0.5566	138	1.4	198	3.7	5.4	0.33
Aug-97	0.5806	135	1.6	111	1.0	5.5	0.32
Sep-97	0.6002	129	1.4	89	2.4	4.9	0.23
Oct-97	0.5576	206	1.5	165	1.9	5.8	0.18
Nov-97	0.5626	80	1.0	85	2.2	5.5	0.24
Dec-97	0.6546	151	1.1	135	2.3	4.6	0.22
Jan-98	0.7759	153	1.2	147	1.3	4.3	0.12
Feb-98	0.7680	161	1.7	135	2.3		0.14
Average	**0.6107**	**145**	**1.5**	**184**	**3.0**	**5.1**	**0.25**

The Hollister Plant consists of one A/O train that can be operated as a BioDenipho in the event future TN limits are required. The plant has a TP limit of 2 mg/L.

Blue Heron WRF - Titusville, FL 4.0 MGD

Month	Ave. Flow MGD	BOD (mg/l)		TSS (mg/l)		TKN (mg/l)		NH_3 (mg/l)		TP (mg/l)		TN (mg/l)
		In	Out	In	Out	In	Out	In	Out	In	Out	Out
May-97	1.53	161	2.00	195	0.00	43.4	1.59	27.9	0.09	6.82	0.20	2.93
Jun-97	1.63	165	1.10	154	0.00	44.7	0.95	26.0	0.09	6.74	1.26	2.87
Jul-97	1.84	155	4.00	205	0.34	36.1	0.91	39.7	0.08	5.74	1.06	3.45
Aug-97	1.67	143	1.10	253	0.00	37.4	1.11	23.9	0.54	8.42	0.24	2.14
Sep-97	1.52	177	2.16	350	0.00	38.4	1.47	23.8	0.43	6.95	0.10	2.67
Oct-97	1.59	136	1.93	175	0.00	35.5	0.60	26.3	0.11	6.17	0.17	1.98
Nov-97	1.68	178	1.55	326	0.28	38.8	0.85	25.1	0.15	7.07	0.11	2.11
Dec-97	2.23	165	2.44	169	0.00	34.0	0.89	23.6	0.24	5.99	0.10	1.61
Jan-98		208	2.50	160	0.00	34.6	0.92	23.7	0.08	5.74	0.12	2.22
Feb-98		158	2.02	167	0.00	32.4	1.09	19.2	0.08	6.34	0.07	1.97
Mar-98		141	1.50	165	0.00	33.1	1.20	23.8	0.33	5.85	0.07	2.67
Apr-98		141	2.73	197	0.68	37.6	1.22	26.5	0.36	6.45	0.07	2.85
Average	**1.711**	**161**	**2.00**	**210**	**0.11**	**37.15**	**1.07**	**25.79**	**0.22**	**6.52**	**0.30**	**2.46**

The Titusville Plant consists of screening, grit removal, two A2/O trains with secondary anoxic zones, secondary clarifiers, tertiary sand filters and UV.

Kruger Ditch Performance Data for Biological Nitrogen & Phosphorus Removal

North Cary, WRF - Cary, NC 10 MGD

Month	Ave. Flow	Temp	BOD (mg/l)		TSS (mg/l)		NH_3 (mg/l)		TP (mg/l)		NOx (mg/l)	TKN (mg/l)		TN (mg/l)
	MGD	°C	In	Out	In	Out	In	Out	In	Out	Out	In	Out	Out
Jan-98	6.6	15.4	262	1.7	328	1.9	27.3	0.05	6.0	0.3	1.4	42	1.4	2.7
Feb-98	6.7	14.8	227	1.6	342	1.7	24.9	0.09	6.0	0.4	1.1	43	1.3	2.5
Mar-98	6.9	15.3	221	2.2	275	1.5	26.4	0.29	6.3	0.3	0.8	41	1.3	2.1
Apr-98	5.9	18.4	264	2.3	297	1.4	30.6	0.60	6.9	0.2	1.2	43	1.5	2.6
May-98	5.7	20.8	292	1.6	378	1.4	30.2	0.08	6.9	0.4	0.4	45	1.3	1.7
Jun-98	5.7	23.7	264	2.0	339	2.4	33.6	0.18	7.3	0.8	0.3	49	1.2	1.6
Jul-98	5.5	25.6	275	1.5	345	1.1	34.4	0.03	7.3	0.3	0.4	36	1.0	1.3
Aug-98	5.7	26.0	295	1.0	391	1.1	29.5	0.03	7.9	0.2	0.6	46	1.0	1.5
Sep-98	5.6	26.0	307	1.3	335	1.1	30.8	0.03	7.0	0.3	0.4	47	0.9	1.3
Oct-98	5.5	24.0	298	1.4	374	1.6	34.7	0.03	7.4	0.2	0.3	51	1.0	1.3
Nov-98	5.4	21.7	317	1.5	381	1.0	33.8	0.03	7.6	0.7	0.6	50	1.3	1.8
Dec-98	5.4	19.8	336	1.4	392	1.3	32.4	0.03	7.3	0.1	0.5	51	1.3	1.7
Average	**5.9**	**20.9**	**280**	**1.6**	**348**	**1.4**	**30.7**	**0.12**	**7.0**	**0.3**	**0.7**	**45**	**1.2**	**1.9**

The North Cary Plant consists of screening, grit and grease removal, two 5 MGD BioDenipho trains with secondary anoxic zones, secondary clarifers, tertiary sand filters and UV disinfection. The Plant's limits are a TN of 6 mg/L and a TP of 2 mg/L. The plant does not have chemical addition for P removal.

Tar River WRF - Louisburg, NC 1.5 MGD

Month	Ave. Flow	Temp	BOD (mg/l)		TSS (mg/l)		NH_3	TP (mg/l)	TN (mg/l)
	MGD	°C	In	Out	In	Out	Out	Out	Out
Jan-03	0.638	13	237	2.60	271	6.35	1.95	0.29	3.84
Feb-03	0.723	13	222	3.28	324	8.01	0.52	0.27	2.64
Mar-03	0.997	14	155	4.16	352	8.14	0.36	0.31	2.40
Apr-03	0.996	17	177	<2.0	256	1.92	0.20	0.14	1.90
May-03	0.654	19	211	2.71	675	1.73	0.22	0.28	1.45
Jun-03	0.592	22	182	<2.0	569	2.29	0.27	0.14	1.39
Jul-03	0.569	24	184	<2.0	385	1.61	0.20	0.22	1.51
Aug-03	0.576	24	172	<2.0	345	1.83	0.18	0.51	1.39
Sep-03	0.596	24	151	<2.0	337	1.45	0.18	0.44	1.52
Oct-03	0.567	19	174	<2.0	363	1.48	0.19	0.13	1.76
Nov-03	0.564	18	136	2.05	230	1.50	0.18	0.14	1.43
Dec-03	0.598	13	143	<2.0	264	3.54	0.21	0.11	1.50
Average	**0.673**	**18**	**178**	**2.00**	**364**	**3.32**	**0.39**	**0.25**	**1.89**

The Louisburg Plant consists of screening, grit and grease removal, one BioDenipho train (no secondary anoxic zone), secondary clarifiers, a tertiary sand filter and UV. The Plant does not have a discharge limit on N or P, but is required to monitor. The design was for a TN of 4 mg/L and a TP of 2 mg/L.

VPDES Permit Application Addendum

1. **Entity to whom the permit is to be issued**: County of Amelia
Who will be legally responsible for the wastewater treatment facilities and compliance with the permit? This may or may not be the facility or property owner.

2. **Is this facility located within city or town boundaries? Y / N**

3. **Provide the tax map parcel number for the land where the discharge is located.** 43-4A

4. **For the facility to be covered by this permit, how many acres will be disturbed during the next fine years due to new construction activities?** 8 acres

5. **What is the design average effluent flow of this facility?** 0.999, 2.0 and 3.0 MGD **For industrial facilities, provide the max. 30-day average production level, include units:**

   In addition to the design flow or production level, should the permit be written with limits for any other discharge flow tiers or production levels? Y / N

   If "Yes", please identify the other flow tiers (in MGD) or production levels: 0.999, 2.0 and 3.0 MGD
   Please consider the following questions for both the flow tiers and the production levels (if applicable): Do you plan to expand operations during the next five years? Is your facility's design flow considerably greater than your current flow?

6. **Nature of operations generating wastewater**:

   70 % of flow from domestic connections/sources
   Number of private residences to be served by the treatment works: __0 __1-49 X 50 or more

   30 % of flow from non-domestic connections/sources

7. **Mode of discharge** : X Continuous ____Intermittent ____Seasonal
   Describe frequency and duration of intermittent or seasonal discharges:

8. **Identify the characteristics of the receiving stream at the point just above the facility's discharge point:**

X Permanent stream, never dry
__ Intermittent stream, usually flowing, sometimes dry
__ Ephemeral stream, wet-weather flow, often dry
__ Effluent-dependent stream, usually or always dry without effluent flow
__ Lake or pond at or below the discharge point
__ Other:_____

9. **Approval Date(s): O & M Manual** Application is for a new, proposed facility **Sludge/Solids Management Plan** Application is for a new, proposed facilitiy

Have there been any changes in your operations or procedures since the above approval dates? Y / N **N/A**

FACILITY NAME: Amelia Courthouse Sanitary District STP VPDES PERMIT NUMBER:_____

VPDES SEWAGE SLUDGE PERMIT APPLICATION FORM

SCREENING INFORMATION

This application is divided into sections. Sections A pertain to all applicants. The applicability of Sections B, C and D depend on your facility's sewage sludge use or disposal practices. The information provided on this page will help you determine which sections to fill out.

1. All applicants must complete Section A (General Information).

2. Will this facility generate sewage sludge? X Yes __No

   Will this facility derive a material from sewage sludge? __Yes X No

   If you answered Yes to either, complete Section B (Generation Of Sewage Sludge Or Preparation Of A Material Derived From Sewage Sludge).

3. Will this facility apply sewage sludge to the land? __Yes X No

   Will sewage sludge from this facility be applied to the land? __Yes X No

   If you answered No to both questions above, skip Section C.

   If you answered Yes to either, answer the following three questions:

   a. Will the sewage sludge from this facility meet the ceiling concentrations, pollutant concentrations, Class A pathogen reduction requirements and one of the vector attraction reduction requirements 1-8, as identified in the instructions?
      __Yes __No

   b. Will sewage sludge from this facility be placed in a bag or other container for sale or give-away for application to the land? __Yes __No

   c. Will sewage sludge from this facility be sent to another facility for treatment or blending? __Yes __No

   If you answered No to all three, complete Section C (Land Application Of Bulk Sewage Sludge).

   If you answered Yes to a, b or c, skip Section C.

4. Do you own or operate a surface disposal site? __Yes X__No

   If Yes, complete Section D (Surface Disposal).

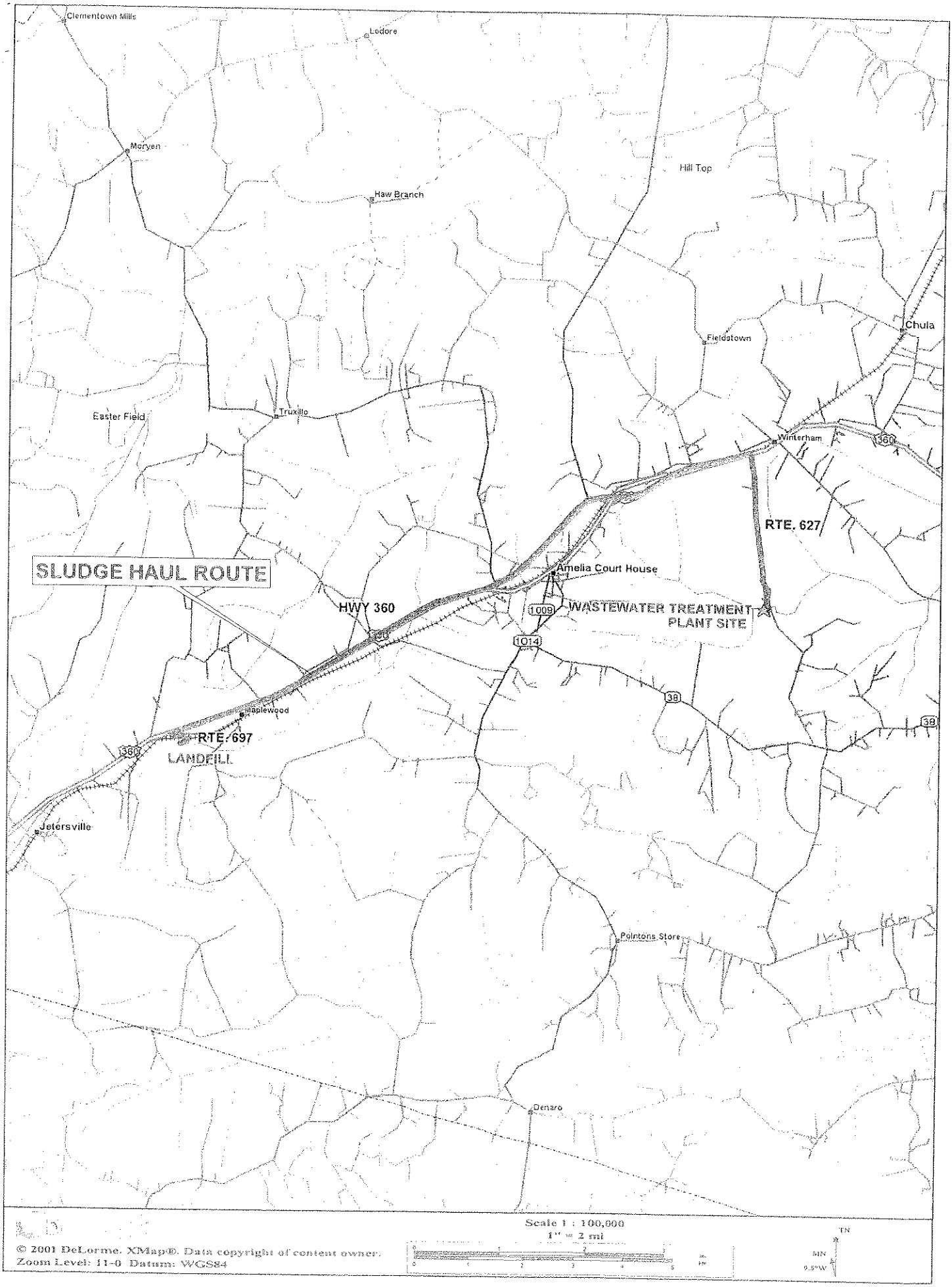

© 2001 DeLorme. XMap®. Data copyright of content owner.
Zoom Level: 11-0 Datum: WGS84

FACILITY NAME: Amelia Courthouse Sanitary District STP VPDES PERMIT NUMBER: _____

SECTION A. GENERAL INFORMATION

All applicants must complete this section.

1. Facility Information.
   a. Facility name: Amelia Courthouse Sanitary District STP
   b. Contact person: Philip Vannoorbeeck
      Title: County Administrator
      Phone: (804 561-3039
   c. Mailing address:
      Street or P.O. Box: PO Box A
      City or Town: Amelia State: VA Zip: 23002
   d. Facility location:
      Street or Route #: Route 627 and Smacks Creek
      County: Amelia
      City or Town: Amelia State: VA Zip: 23002
   e. Is this facility a Class I sludge management facility? ___Yes X__No
   f. Facility design flow rate: 0.999, 2.0 and 3.0 mgd
   g. Total population served: Proposed 5000 , 10,000, 15,000
   h. Indicate the type of facility:
      X Publicly owned treatment works (POTW)
      ___ Privately owned treatment works
      ___ Federally owned treatment works
      ___ Blending or treatment operation
      ___ Surface disposal site
      ___ Other (describe): _____

2. Applicant Information. If the applicant is different from the above, provide the following:
   a. Applicant name: _____
   b. Mailing address:
      Street or P.O. Box: _____
      City or Town: _____ State: _____ Zip: _____
   c. Contact person: _____
      Title: _____
      Phone: ( ) _____
   d. Is the applicant the owner or operator (or both) of this facility?
      X owner X operator
   e. Should correspondence regarding this permit be directed to the facility or the applicant? (Check one)
      _____ facility X applicant

3. Permit Information.
   a. Facility's VPDES permit number (if applicable): Proposed STP
   b. List on this form or an attachment, all other federal, state or local permits or construction approvals received or applied for that regulate this facility's sewage sludge management practices:

Permit Number:	Type of Permit:

4. Indian Country. Does any generation, treatment, storage, application to land or disposal of sewage sludge from this facility occur in Indian Country? ___Yes X No If yes, describe:

_____

5. Topographic Map. Provide a topographic map or maps (or other appropriate maps if a topographic map is unavailable) that shows the following information. Maps should include the area one mile beyond all property boundaries of the facility: ATTACHED
   a. Location of all sewage sludge management facilities, including locations where sewage sludge is generated, stored, treated, or disposed.
   b. Location of all wells, springs, and other surface water bodies listed in public records or otherwise known to the applicant within 1/4 mile of the property boundaries.

6. Line Drawing. Provide a line drawing and/or a narrative description that identifies all sewage sludge processes that will be employed during the term of the permit including all processes used for collecting, dewatering, storing, or treating sewage sludge, the destination(s) of all liquids and solids leaving each unit, and all methods used for pathogen reduction and vector attraction reduction. ATTACHED

7. Contractor Information. Are any operational or maintenance aspects of this facility related to sewage sludge generation, treatment, use or disposal the responsibility of a contractor? __Yes X No
   If yes, provide the following for each contractor (attach additional pages if necessary).
   Name: _____
   Mailing address:
   Street or P.O. Box: _____
   City or Town: _____ State: _____ Zip: _____
   Phone: ( ) _____
   Contractor's Federal, State or Local Permit Number(s) applicable to this facility's sewage sludge:
   _____
   If the contractor is responsible for the use and/or disposal of the sewage sludge, provide a description of the service to be provided to the applicant and the respective obligations of the applicant and the contractor(s).

8. Pollutant Concentrations. Using the table below or a separate attachment, provide sewage sludge monitoring data for the pollutants which limits in sewage sludge have been established in 9 VAC 25-31-10 et seq. for this facility's expected use or disposal practices. All data must be based on three or more samples taken at least one month apart and must be no more than four and one-half years old. Proposed STP

POLLUTANT	CONCENTRATION (mg/kg dry weight)	SAMPLE DATE	ANALYTICAL METHOD	DETECTION LEVEL FOR ANALYSIS
Arsenic				
Cadmium				
Chromium				
Copper				
Lead				
Mercury				
Molybdenum				
Nickel				
Selenium				
Zinc				

9. Certification. Read and submit the following certification statement with this application. Refer to the instructions to determine who is an officer for purposes of this certification. Indicate which parts of the application you have completed and are submitting:

   X Section A (General Information)
   X Section B (Generation of Sewage Sludge or Preparation of a Material Derived from Sewage Sludge)
   ____Section C (Land Application of Bulk Sewage Sludge)
   ____Section D (Surface Disposal)

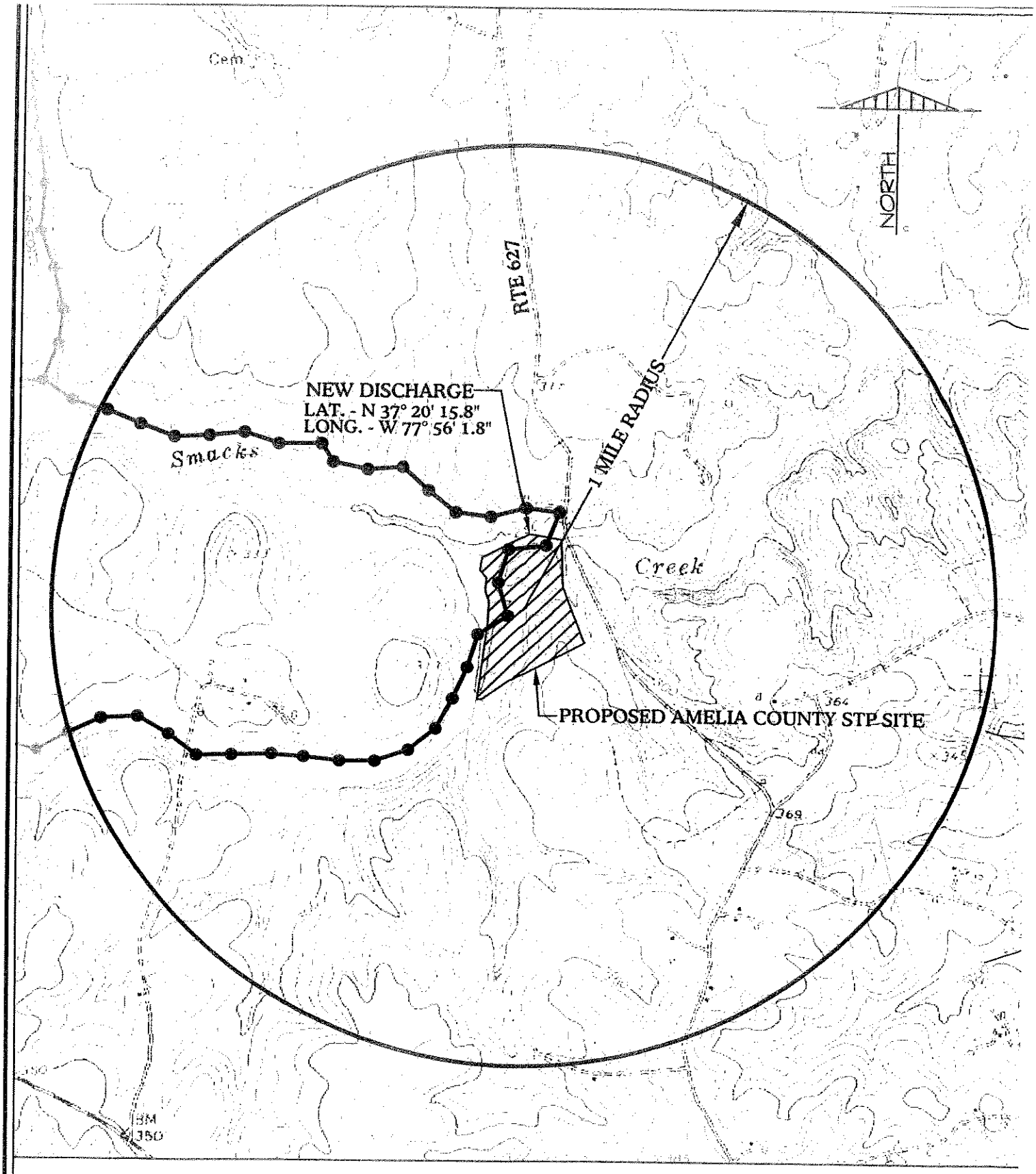

VICINITY MAP

USGS QUADRANGLE:
AMELIA COURT HOUSE, VA.

PREPARED BY:

B & B Consultants, Inc.
Engineers - Surveyors - Lab Analysts -
Plant Operators - Environmental Services
Chase City & South Hill, Virginia

0 750 1,500 3,000 4,500

SCALE: 1" = 1,500'

NARRATIVE DESCRIPTION OF SLUDGE PROCESS

Volatile solids concentration will be reduced in extended-air activated sludge process. Solids will be wasted from activated sludge process to aerobic sludge digesters where volatile solids will be further reduced. Solids in digester will be concentrated by decanting supernatant to head of plant. Concentrated digested solids will be dewatered by conditioning solids with polymer and belt press dewatering. Belt press filtrate will be returned to head of plant. Dewatered sludge solids will be trucked to the Maplewood Recycling and Waste Disposal Landfill located nearby.

FACILITY NAME: Amelia Courthouse Sanitary District STP **VPDES PERMIT NUMBER:**_____

I certify under penalty of law that this document and all attachments were prepared under my direction or supervision in accordance with a system designed to assure that qualified personnel properly gather and evaluate the information submitted. Based on my inquiry of the person or persons who manage the system or those persons directly responsible for gathering the information, the information is, to the best of my knowledge and belief, true, accurate and complete. I am aware that there are significant penalties for submitting false information, including the possibility of fine and imprisonment for knowing violations.

Name and official title Philip Vannoorbeeck, County Administrator

Signature Philip V Date Signed 6/2/06

Telephone number (804)561-3039

Upon request of the department, you must submit any other information necessary to assess sewage sludge use or disposal practices at your facility or identify appropriate permitting requirements.

FACILITY NAME: Amelia Courthouse Sanitary District STP VPDES PERMIT NUMBER:_____

SECTION B. GENERATION OF SEWAGE SLUDGE OR PREPARATION OF A MATERIAL DERIVED FROM SEWAGE SLUDGE

Complete this section if your facility generates sewage sludge or derives a material from sewage sludge

1. Amount Generated On Site.
   Total dry metric tons per 365-day period generated at your facility: 228, 456 and 684 dry metric tons @ design flows of 0.999, 2.0 and 3.0 MGD

2. Amount Received from Off Site. If your facility receives sewage sludge from another facility for treatment, use or disposal, provide the following information for each facility from which sewage sludge is received. If you receive sewage sludge from more than one facility, attach additional pages as necessary. N/A
   a. Facility name:_____
   b. Contact Person:_____
      Title: _____
      Phone ( )_____
   c. Mailing address:
      Street or P.O. Box:_____
      City or Town:_____ State:_____ Zip:_____
   d. Facility Address:_____
      (not P.O. Box) _____
   e. Total dry metric tons per 365-day period received from this facility:_____ dry metric tons
   f. Describe, on this form or on another sheet of paper, any treatment processes known to occur at the off-site facility, including blending activities and treatment to reduce pathogens or vector attraction characteristics:
      _____
      _____

3. Treatment Provided at Your Facility.
   a. Which class of pathogen reduction is achieved for the sewage sludge at your facility?
      ___Class A X Class B ___Neither or unknown
   b. Describe, on this form or another sheet of paper, any treatment processes used at your facility to reduce pathogens in sewage sludge: Extended air activated sludge treatment system followed by aerobic sludge digestion and sludge dewatering
   c. Which vector attraction reduction option is met for the sewage sludge at your facility?
      ___ Option 1 (Minimum 38 percent reduction in volatile solids)
      ___ Option 2 (Anaerobic process, with bench-scale demonstration)
      ___ Option 3 (Aerobic process, with bench-scale demonstration)
      X Option 4 (Specific oxygen uptake rate for aerobically digested sludge)
      ___ Option 5 (Aerobic processes plus raised temperature)
      ___ Option 6 (Raise pH to 12 and retain at 11.5)
      ___ Option 7 (75 percent solids with no unstabilized solids)
      ___ Option 8 (90 percent solids with unstabilized solids)
      ___ None or unknown
   d. Describe, on this form or another sheet of paper, any treatment processes used at your facility to reduce vector attraction properties of sewage sludge: Extended air activated sludge treatment system followed by aerobic sludge digestionn and sludge dewatering
   e. Describe, on this form or another sheet of paper, any other sewage sludge treatment activities, including blending, not identified in a - d above: None
      _____

4. Preparation of Sewage Sludge Meeting Ceiling and Pollutant Concentrations, Class A Pathogen Requirements and One of Vector Attraction Reduction Options 1-8 (EQ Sludge). N/A
   (If sewage sludge from your facility does not meet all of these criteria, skip Question 4.)
   a. Total dry metric tons per 365-day period of sewage sludge subject to this section that is applied to the land: _____ dry metric tons
   b. Is sewage sludge subject to this section placed in bags or other containers for sale or give-away?

FACILITY NAME: Amelia Courthouse Sanitary District STP **VPDES PERMIT NUMBER:**_____
__Yes __No

5. Sale or Give-Away in a Bag or Other Container for Application to the Land. N/A

(Complete this question if you place sewage sludge in a bag or other container for sale or give-away prior to land application. Skip this question if sewage sludge is covered in Question 4.)

a. Total dry metric tons per 365-day period of sewage sludge placed in a bag or other container at your facility for sale or give-away for application to the land:_____ dry metric tons

b. Attach, with this application, a copy of all labels or notices that accompany the sewage sludge being sold or given away in a bag or other container for application to the land.

6. Shipment Off Site for Treatment or Blending. N/A

(Complete this question if sewage sludge from your facility is sent to another facility that provides treatment or blending. This question does not apply to sewage sludge sent directly to a land application or surface disposal site. Skip this question if the sewage sludge is covered in Questions 4 or 5. If you send sewage sludge to more than one facility, attach additional sheets as necessary.)

a. Receiving facility name:_____

b. Facility contact: _____
Title: _____
Phone: ( )_____

c. Mailing address:
Street or P.O. Box:_____
City or Town:_____ State:_____ Zip:_____

d. Total dry metric tons per 365-day period of sewage sludge provided to receiving facility: _____ dry metric tons

e. List, on this form or an attachment, the receiving facility's VPDES permit number as well as the numbers of all other federal, state or local permits that regulate the receiving facility's sewage sludge use or disposal practices:

Permit Number:	Type of Permit:
_____	_____
_____	_____

f. Does the receiving facility provide additional treatment to reduce pathogens in sewage sludge from your facility? ___Yes ___No
Which class of pathogen reduction is achieved for the sewage sludge at the receiving facility?
___Class A ___Class B ___Neither or unknown
Describe, on this form or another sheet of paper, any treatment processes used at the receiving facility to reduce pathogens in sewage sludge:_____
_____

g. Does the receiving facility provide additional treatment to reduce vector attraction characteristics of the sewage sludge? ___Yes ___No
Which vector attraction reduction option is met for the sewage sludge at the receiving facility?
___ Option 1 (Minimum 38 percent reduction in volatile solids)
___ Option 2 (Anaerobic process, with bench-scale demonstration)
___ Option 3 (Aerobic process, with bench-scale demonstration)
___ Option 4 (Specific oxygen uptake rate for aerobically digested sludge)
___ Option 5 (Aerobic processes plus raised temperature)
___ Option 6 (Raise pH to 12 and retain at 11.5)
___ Option 7 (75 percent solids with no unstabilized solids)
___ Option 8 (90 percent solids with unstabilized solids)
___ None unknown
Describe, on this form or another sheet of paper, any treatment processes used at the receiving facility to reduce vector attraction properties of sewage sludge:_____
_____

h. Does the receiving facility provide any additional treatment or blending not identified in f or g above?
___Yes ___No
If yes, describe, on this form or another sheet of paper, the treatment processes not identified in f or g above:
_____
_____

i. If you answered yes to f., g or h above, attach a copy of any information you provide to the receiving facility

to comply with the "notice and necessary information" requirement of 9 VAC 25-31-530.G.

j Does the receiving facility place sewage sludge from your facility in a bag or other container for sale or give-away for application to the land? ___Yes ___No
If yes, provide a copy of all labels or notices that accompany the product being sold or given away.

k. Will the sewage sludge be transported to the receiving facility in a truck-mounted watertight tank normally used for such purposes? ___ Yes ___ No. If no, provide description and specification on the vehicle used to transport the sewage sludge to the receiving facility.
Show the haul route(s) on a location map or briefly describe the haul route below and indicate the days of the week and the times of the day sewage sludge will be transported. _____
_____
_____

7. Land Application of Bulk Sewage Sludge. N/A

(Complete Question 7.a if sewage sludge from your facility is applied to the land, unless the sewage sludge is covered in Questions 4, 5 or 6; complete Question 7.b, c & d only if you are responsible for land application of sewage sludge.)

a. Total dry metric tons per 365-day period of sewage sludge applied to all land application sites:_____dry metric tons

b. Do you identify all land application sites in Section C of this application? ___Yes ___No
If no, submit a copy of the Land Application Plan (LAP) with this application (LAP should be prepared in accordance with the instructions).

c. Are any land application sites located in States other than Virginia? ___Yes ___No
If yes, describe, on this form or on another sheet of paper, how you notify the permitting authority for the States where the land application sites are located. Provide a copy of the notification.
_____
_____

d. Attach a copy of any information you provide to the owner or lease holder of the land application sites to comply with the "notice and necessary" information requirement of 9 VAC 25-31-530 F and/or H (Examples may be obtained in Appendix IV).

8. Surface Disposal. N/A

(Complete Question 8 if sewage sludge from your facility is placed on a surface disposal site.)

a. Total dry metric tons per 365-day period of sewage sludge from your facility placed on all surface disposal sites: _____ dry metric tons

b. Do you own or operate all surface disposal sites to which you send sewage sludge for disposal?
___Yes ___No
If no, answer questions c - g for each surface disposal site that you do not own or operate. If you send sewage sludge to more than one surface disposal site, attach additional pages as necessary.

c. Site name or number: _____

d. Contact person: _____
Title: _____
Phone: ( )_____
Contact is: ___Site Owner ___Site operator

e. Mailing address.
Street or P.O. Box:_____
City or Town:_____ State:_____ Zip:_____

f. Total dry metric tons per 365-day period of sewage sludge from your facility placed on this surface disposal site: _____ dry metric tons

g. List, on this form or an attachment, the surface disposal site VPDES permit number as well as the numbers of all other federal, state or local permits that regulate the sewage sludge use or disposal practices at the surface disposal site:

Permit Number:	Type of Permit:
_____	_____
_____	_____

9. Incineration. N/A

(Complete Question 9 if sewage sludge from your facility is fired in a sewage sludge incinerator.)

FACILITY NAME: Amelia Courthouse Sanitary District STP **VPDES PERMIT NUMBER:**_____

a. Total dry metric tons per 365-day period of sewage sludge from your facility fired in a sewage sludge incinerator: _____ dry metric tons

b. Do you own or operate all sewage sludge incinerators in which sewage sludge from your facility is fired?
___Yes ___No
If no, answer questions c - g for each sewage sludge incinerator that you do not own or operate. If you send sewage sludge to more than one sewage sludge incinerator, attach additional pages as necessary.

c. Incinerator name or number: _____

d. Contact person: _____
Title: _____
Phone: ( )_____
Contact is: ___Incinerator Owner ___Incinerator Operator

e. Mailing address.
Street or P.O. Box:_____
City or Town:_____ State:_____ Zip:_____

f. Total dry metric tons per 365-day period of sewage sludge from your facility fired in this sewage sludge incinerator: _____ dry metric tons

g. List on this form or an attachment the numbers of all other federal, state or local permits that regulate the firing of sewage sludge at this incinerator:

Permit Number:	Type of Permit:

10. Disposal in a Municipal Solid Waste Landfill.

(Complete Question 10 if sewage sludge from your facility is placed on a municipal solid waste landfill. Provide the following information for each municipal solid waste landfill on which sewage sludge from your facility is placed. If sewage sludge is placed on more than one municipal solid waste landfill, attach additional pages as necessary.)

a. Landfill name: Maplewood Recylcing & Waste Disposal Facility

b. Contact person: Brian McClung
Title: District Manager
Phone: (804) 561-5787 ext. 223
Contact is: X Landfill Owner ___Landfill Operator

c. Mailing address.
Street or P.O. Box: 20221 Maplewood Road
City or Town: Jetersville State: VA Zip: 23083

d. Landfill location.
Street or Route #: Route 697
County: Amelia
City or Town: Jetersville State: VA Zip: 23083

e. Total dry metric tons per 365-day period of sewage sludge placed in this municipal solid waste landfill:
228 dry metric tons @ design flow

f. List, on this form or an attachment, the numbers of all federal, state or local permits that regulate the operation of this municipal solid waste landfill:

Permit Number:	Type of Permit:
540	Virginia Solid Waste Permit

g. Does sewage sludge meet applicable requirements in the Virginia Solid Waste Management Regulation, 9 VAC 20-80-10 et seq., concerning the quality of materials disposed in a municipal solid waste landfill?
X Yes ___No Proposed

h. Does the municipal solid waste landfill comply with all applicable criteria set forth in the Virginia Solid Waste Management Regulation, 9 VAC 20-80-10 et seq.? X Yes ___No

i. Will the vehicle bed or other container used to transport sewage sludge to the municipal solid waste landfill be watertight and covered? ___ Yes ___ No Dump truck will be covered
Show the haul route(s) on a location map or briefly describe the route below and indicate the days of the week and time of the day sewage sludge will be transported. See attached haul route map. Week days between 8 AM and 4 PM.

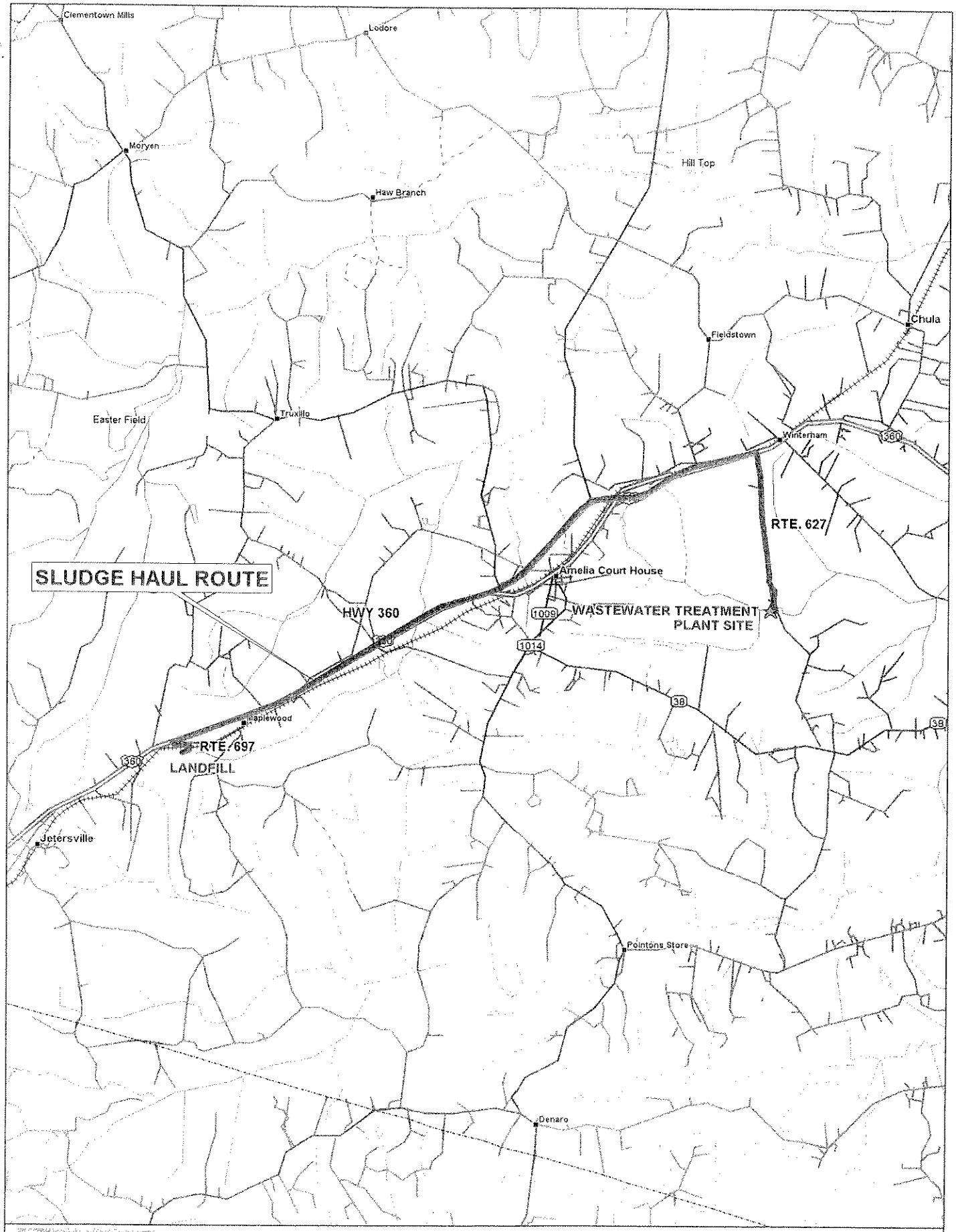

DeLorme

Scale 1 : 100,000
1" = 2 mi

© 2001 DeLorme. XMap®. Data copyright of content owner.
Zoom Level: 11-0 Datum: WGS84

FACILITY NAME: Amelia Courthouse Sanitary District STP **VPDES PERMIT NUMBER:**_____

SECTION C. LAND APPLICATION OF BULK SEWAGE SLUDGE

N/A

Complete this section for sewage sludge that is land applied unless any of the following conditions apply:

The sewage sludge meets the Table 1 ceiling concentrations, the Table 3 pollutant concentrations, Class A pathogen requirements and one of the vector attraction reduction options 1-8 (fill out B.4 instead) (EQ Sludge); or

The sewage sludge is sold or given away in a bag or other container for application to the land (fill out B.5 instead); or

You provide the sewage sludge to another facility for treatment or blending (fill out B.6 instead).

Complete Section C for every site on which the sewage sludge that you reported in B.7 is land applied.

1. Identification of Land Application Site.
   a. Site name or number: _____
   b. Site location (Complete i and ii)
      i. Street or Route#: _____
         County: _____
         City or Town: _____ State: _____ Zip: _____
      ii. Latitude:_____ Longitude:_____
         Method of latitude/longitude determination
         _____ USGS map _____ Filed survey _____ Other
   c. Topographic map. Provide a topographic map (or other appropriate map if a topographic map is unavailable) that shows the site location.

2. Owner Information.
   a. Are you the owner of this land application site? ___Yes ___No
   b. If no, provide the following information about the owner:
      Name: _____
      Street or P.O. Box:_____
      City or Town: _____ State:_____ Zip:_____
      Phone: ( )_____

3. Applier Information:
   a. Are you the person who applies, or who is responsible for application of, sewage sludge to this land application site? ___Yes ___No
   b. If no, provide the following information for the person who applies the sewage sludge:
      Name: _____
      Street or P.O. Box:_____
      City or Town:_____ State:_____ Zip:_____
      Phone: ( )_____
   c. List, on this form or an attachment, the numbers of all federal, state or local permits that regulate the person who applies sewage sludge to this land application site:

Permit Number:	Type of Permit:
_____	_____
_____	_____

4. Site Type. Identify the type of land application site from among the following:
   ___Agricultural land ___Reclamation site ___Forest
   ___Public contact site ___Other. Describe _____

5. Vector Attraction Reduction.
   Are any vector attraction reduction requirements met when sewage sludge is applied to the land application site?
   ____Yes ____No If yes, answer a and b.
   a. Indicate which vector attraction reduction option is met:
      ___ Option 9 (Injection below land surface)
      ___ Option 10 (Incorporation into soil within 6 hours)
   b. Describe, on this form or on another sheet of paper, any treatment processes used at the land application site to reduce the vector attraction properties of sewage sludge:
      _____
      _____

FACILITY NAME: Amelia Courthouse Sanitary District STP **VPDES PERMIT NUMBER:**_____

6. Cumulative Loadings and Remaining Allotments.

(Complete Question 6 only if the sewage sludge applied to this site since July 20, 1993 is subject to the cumulative pollutant loading rates (CPLRs) - see instructions.)

a. Have you contacted DEQ or the permitting authority in the state where the sewage sludge subject to the CPLRs will be applied to ascertain whether bulk sewage sludge subject to the CPLRs has been applied to this site since July 20, 1993? ___Yes ___No

If no, sewage sludge subject to the CPLRs may not be applied to this site.

If yes, provide the following information:

Permitting authority: _____

Contact person:_____

Phone:( )_____

b. Based upon this inquiry, has bulk sewage sludge subject to the CPLRs been applied to this site since July 20, 1993? ___Yes ___No If no, skip the rest of Question 6. If yes, answer questions c - e.

c. Site size, in hectares: _____ (one hectare = 2.471 acres)

d. Provide the following information for every facility other than yours that is sending or has sent sewage sludge subject to the CPLRs to this site since July 20, 1993. If more than one such facility sends sewage sludge to this site, attach additional pages as necessary.

Facility name:_____

Facility contact: _____

Title: _____

Phone: ( )_____

Mailing address.

Street or P.O. Box:_____

City or Town:_____ State:_____ Zip:_____

e. Provide the total loading and allotment remaining, in kg/hectare, for each of the following pollutants:

	Cumulative loading	Allotment remaining
Arsenic	_____	_____
Cadmium	_____	_____
Copper	_____	_____
Lead	_____	_____
Mercury	_____	_____
Nickel	_____	_____
Selenium	_____	_____
Zinc	_____	_____

Complete Questions 7-12 below only if you apply sewage sludge, or you are responsible for land application of sewage sludge. Information required by these questions may be prepared as attachments to this form. Skip the following questions if you contract land application to someone else (as indicated under Section A.7) who is responsible for the operation.

7. Sludge Characterization. Use the table below or a separate attachment, provide at least one analysis for each parameter.

PCBs (mg/kg)	_____
pH (S. U.)	_____
Percent Solids (%)	_____
Ammonium Nitrogen (mg/kg)	_____
Nitrate Nitrogen (mg/kg)	_____
Total Kjeldahl Nitrogen (mg/kg)	_____
Total Phosphorus (mg/kg)	_____
Total Potassium (mg/kg)	_____
Alkalinity as $CaCO_3$* (mg/kg)	_____

* Lime treated sludge (10% or more lime by dry weight) should be analyzed for percent $CaCO_3$.

FACILITY NAME: Amelia Courthouse Sanitary District STP **VPDES PERMIT NUMBER:**_____

8. Storage Requirements. N/A

Existing and proposed sludge storage facilities must provide an estimated annual sludge balance on a monthly basis incorporating such factors as storage capacity, sludge production and land application schedule. Include pertinent calculations justifying storage requirements.

Proposed sludge storage facilities must also provide the following information:

a. A sludge storage site layout on a 7.5 minute topographic quadrangle or other appropriate scaled map to show the following topographic features of the surrounding landscape to a distance of 0.25 mile. Clearly mark the property line.
   1) Water wells, abandoned or operating
   2) Surface waters
   3) Springs
   4) Public water supply(s)
   5) Sinkholes
   6) Underground and/or surface mines
   7) Mine pool (or other) surface water discharge points
   8) Mining spoil piles and mine dumps
   9) Quarry(s)
   10) Sand and gravel pits
   11) Gas and oil wells
   12) Diversion ditch(s)
   13) Agricultural drainage ditch(s)
   14) Occupied dwellings, including industrial and commercial establishments
   15) Landfills or dumps
   16) Other unlined impoundments
   17) Septic tanks and drainfields
   18) Injection wells
   19) Rock outcrops

b. A topographic map of sufficient detail to clearly show the following information:
   1) Maximum and minimum percent slopes
   2) Depressions on the site that may collect water
   3) Drainageways that may attribute to rainfall run-on to or runoff from this site
   4) Portions of the site (if any) which are located with the 100-year floodplain and how the storage facility will be protected from flooding

c. Data and specifications for the storage facility lining material.

d. Plan and cross-sectional views of the storage facility.

e. Depth from the bottom of the storage facility to the seasonal high water table and separation distance to the permanent water table.

9. Land Area Requirements. Provide calculations justifying the land area requirements for land application of sewage sludge taking into consideration average soil productivity group, crop(s) to be grown and most limiting factor(s) of the sewage sludge, specifically Plant Available Nitrogen (PAN), Calcium Carbonate Equivalence (CCE), and metal loadings (CPLR sewage sludge only), where applicable. Relate PAN, CCE, and metal loadings to demonstrate the most limiting factor for land application. N/A

10. Landowner Agreement Forms. Provide a properly completed Sewage Sludge Application Agreement Form (attached) for each landowner if sewage sludge is to be applied onto land not owned by the applicant. N/A

11. Ground Water Monitoring.

Are any ground water monitoring data available for this land application site? ___Yes ___No

If yes, submit the ground water monitoring data with this permit application. Also submit a written description of the well locations, approximate depth to ground water, and the ground water monitoring procedures used to obtain these data. N/A

12. Land Application Site Information.

(Complete Items a-d for sites receiving infrequent application - land application of sewage sludge up to the agronomic rate at a frequency of once in a 3 year period; complete Items a-h for sites receiving frequent application - land application of sewage sludge in excess of 70% the agronomic rate at a frequency greater than once in a 3 year period)

N/A

a. Provide a general location map for each county which clearly indicates the location of all the land application sites. N/A

b. For each land application site provide a site plan of sufficient detail to clearly show the concerned landscape features and associated buffer zones (See instructions). Provide a legend for each landscape feature and the net acreage for each field taking into account the proposed buffer zones. N/A

c. In order to ensure that land application of bulk sewage sludge will not impact federally listed threatened or endangered species or federally designated critical habitat, the applicant must notify the field office of the U. S. Department of the Interior, Fish and Wildlife Service (FWS), by a letter, the proposed land application activities with the identification of the land application sites. The address and phone number of FWS are provided below. N/A

U. S. Fish and Wildlife Service
Ecological Services
6669 Short Lane
Gloucester, VA 23061
TEL: (804) 693-6694

Provide a copy of the notification letter with this application form.

d. Provide a soil survey map, preferably photographically based, with the field boundaries clearly marked. (A USDA-SCS soil survey map should be provided, if available.)
Provide a detailed legend for each soil survey map which uses accepted USDA-SCS descriptions of the typifying pedon for each soil series (soil type). Complex associations may be described as a range of characteristics. Soil descriptions shall include as a minimum the following information. N/A

1) Soil symbol
2) Soil series, textural phase and slope range
3) Depth to seasonal high water table
4) Depth to bedrock
5) Estimated soil productivity group (for the proposed crop rotation)

Item e - h are required for sites receiving frequent application of sewage sludge

e. In order to verify the information provided in item d, characterize the soil at each land application site. Representative soil borings or test pits to a depth of five feet or to bedrock if shallower, are to be coordinated for the typifying pedon of each soil series (soil type). Soil descriptions shall include as a minimum the following information: N/A

1). Soil symbol
2). Soil series, textural phase and slope range
3). Depth to seasonal high water table
4). Depth to bedrock
5). Estimated soil productivity group (for the proposed crop rotation)

f. Collect and analyze soil samples from each field, weighted to best represent each of the soil borings performed for Item e. Using the table below or a separate attachment, provide at least one analysis per sample for each of the following parameters.

Soil Organic Matter (%)	_____
Soil pH (std. units)	_____
Cation Exchange Capacity (meq/100g)	_____
Total Nitrogen (ppm)	_____
Organic Nitrogen (ppm)	_____
Ammonia Nitrogen (ppm)	_____
Nitrate Nitrogen (ppm)	_____
Available Phosphorus (ppm)	_____
Exchangeable Potassium (mg/100g)	_____
Exchangeable Sodium (mg/100g)	_____
Exchangeable Calcium (mg/100g)	_____
Exchangeable Magnesium (mg/100g)	_____
Arsenic (ppm)	_____
Cadmium (ppm)	_____
Copper (ppm)	_____
Lead (ppm)	_____
Mercury (ppm)	_____
Molybdenum (ppm)	_____
Nickel (ppm)	_____
Selenium (ppm)	_____
Zinc (ppm)	_____
Manganese (ppm)	_____
Particle Size Analysis or USDA Textural Estimate (%)	_____

g. Relate the crop nutrient needs to anticipated yields, soil productivity rating and the various fertilizer or nutrient sources from sludge and chemical fertilizers. Describe any specialized agronomic management practices which may be required as a result of high soil pH. If the sludge is expected to possess an unusually high CCE or other unusual properties, provide a description of any plant tissue testing, supplemental fertilization or intensive agronomic management practices which may be necessary.

h. Using a narrative format and referencing any related charts, describe the proposed cropping system. Show how the crop rotation and management will be coordinated with the design of the land application system. Include any supplemental fertilization program, soil testing and the coordination of tillage practices, planting and harvesting schedules and timing of land application.

FACILITY NAME: Amelia Courthouse Sanitary District STP **VPDES PERMIT NUMBER:**_____

SEWAGE SLUDGE APPLICATION AGREEMENT

N/A

This sewage sludge application agreement is made on this date _____ between _____, referred to here as "landowner", and _____, referred to here as the "Permittee".

Landowner is the owner of agricultural land shown on the map attached as Exhibit A and designated there as _____ ("landowner's land"). Permittee agrees to apply and landowner agrees to comply with certain permit requirements following application of sewage sludge on landowner's land in amounts and in a manner authorized by VPDES permit number _____ which is held by the Permittee.

Landowner acknowledges that the appropriate application of sewage sludge will be beneficial in providing fertilizer and soil conditioning to the property. Moreover, landowner acknowledges having been expressly advised that, in order to protect public health, the following site restrictions must be adhered to when sewage sludge receives Class B treatment for pathogen reduction:

1. Food crops with harvested parts that touch the sewage sludge/soil mixture and are totally above the land surface shall not be harvested for 14 months after application of sewage sludge;

2. Food crops with harvested parts below the surface of the land shall not be harvested for 20 months after application of sewage sludge when the sewage sludge remains on the land surface for four months or longer prior to incorporation into the soil;

3. Food crops with harvested parts below the surface of the land shall not be harvested for 38 months after application of sewage sludge when the sewage sludge remains on the land surface for less than four months prior to incorporation into the soil;

4. Food crops, feed crops, and fiber crops shall not be harvested for 30 days after application of sewage sludge;

5. Animals shall not be grazed on the land for 30 days after application of sewage sludge;

6. Turf grown on land where sewage sludge is applied shall not be harvested for one year after application of the sewage sludge when the harvested turf is placed on either land with a high potential for public exposure or a lawn, unless otherwise specified by the State Water Control Board;

7. Public access to land with a high potential for public exposure shall be restricted for one year after application of sewage sludge;

8. Public access to land with a low potential for public exposure shall be restricted for 30 days after application of sewage sludge.

9. Tobacco, because it has been shown to accumulate cadmium, should not be grown on landowner's land for three years following the application of sewage sludge borne cadmium equal to or exceeding 0.5 kilograms/hectare (0.45 pounds/acre).

Permittee agrees to notify landowner or landowner's designee of the proposed schedule for sewage sludge application and specifically prior to any particular application to landowner's land. This agreement may be terminated by either party upon written notice to the address specified below.

Landowner:	Permittee:
_____	_____
Signature	Signature
_____	_____
Mailing Address	Mailing Address

FACILITY NAME: Amelia Courthouse Sanitary District STP **VPDES PERMIT NUMBER:**_____

SECTION D. SURFACE DISPOSAL

Complete this section only if you own or operate a surface disposal site. Provide the information for each active sewage sludge unit. N/A

1. Information on Active Sewage Sludge Units.
   a. Unit name or number: _____
   b. Unit location
      i. Street or Route#: _____
         County: _____
         City or Town: _____ State: _____ Zip: _____
      ii. Latitude:_____ Longitude:_____
         Method of latitude/longitude determination
         _____ USGS map _____ Filed survey _____ Other
   c. Topographic map. Provide a topographic map (or other appropriate map if a topographic map is unavailable) that shows the site location.
   d. Total dry metric tons of sewage sludge placed on the active sewage sludge unit per 365-day period: _____dry metric tons.
   e. Total dry metric tons of sewage sludge placed on the active sewage sludge unit over the life of the unit: _____ dry metric tons.
   f. Does the active sewage sludge unit have a liner with a minimum hydraulic conductivity of 1×10^{-7}cm/sec? ___Yes ___No If yes, describe the liner or attach a description.
      _____
      _____
   g. Does the active sewage sludge unit have a leachate collection system? ___Yes ___No
      If yes, describe the leachate collection system or attach a description. Also, describe the method used for leachate disposal and provide the numbers of any federal, state or local permits for leachate disposal:
      _____
      _____
      _____
   h. If you answered no to either f or g, answer the following:
      Is the boundary of the active sewage sludge unit less than 150 meters from the property line of the surface disposal site? ___Yes ___No If yes, provide the actual distance in meters:_____
   i. Remaining capacity of active sewage sludge unit, in dry metric tons:_____ dry metric tons
      Anticipated closure date for active sewage sludge unit, if known:_____ (MM/DD/YYYY)
      Provide with this application a copy of any closure plan developed for this active sewage sludge unit.

2. Sewage Sludge from Other Facilities.
   Is sewage sludge sent to this active sewage sludge unit from any facilities other than yours? ___Yes ___No
   If yes, provide the following information for each such facility, attach additional sheets as necessary.
   a. Facility name:_____
   b. Facility contact: _____
      Title: _____
      Phone: ( )_____
   c. Mailing address.
      Street or P.O. Box:_____
      City or Town:_____ State:_____ Zip:_____
   d. List, on this form or an attachment, the facility's VPDES permit number as well as the numbers of all other federal, state or local permits that regulate the facility's sewage sludge management practices:

Permit Number:	Type of Permit:
_____	_____
_____	_____

   e. Which class of pathogen reduction is achieved before sewage sludge leaves the other facility?
      ___Class A ___Class B ___Neither or unknown
   f. Describe, on this form or on another sheet of paper, any treatment processes used at the other facility to reduce pathogens in sewage sludge:_____
      _____
      _____

g. Which vector attraction reduction option is achieved before sewage sludge leaves the other facility?
   ___ Option 1 (Minimum 38 percent reduction in volatile solids)
   ___ Option 2 (Anaerobic process, with bench-scale demonstration)
   ___ Option 3 (Aerobic process, with bench-scale demonstration)
   ___ Option 4 (Specific oxygen uptake rate for aerobically digested sludge)
   ___ Option 5 (Aerobic processes plus raised temperature)
   ___ Option 6 (Raise pH to 12 and retain at 11.5)
   ___ Option 7 (75 percent solids with no unstabilized solids)
   ___ Option 8 (90 percent solids with unstabilized solids)
   ___ None or unknown

h. Describe, on this form or another sheet of paper, any treatment processes used at the other facility to reduce vector attraction properties of sewage sludge:_____
   _____
   _____

i. Describe, on this form or another sheet of paper, any other sewage sludge treatment activities performed by the other facility that are not identified in e - h above:_____
   _____
   _____

3. Vector Attraction Reduction.

a. Which vector attraction reduction option, if any, is met when sewage sludge is placed on this active sewage sludge unit?
   ___ Option 9 (Injection below land surface)
   ___ Option 10 (Incorporation into soil within 6 hours)
   ___ Option 11 (Covering active sewage sludge unit daily)

b. Describe, on this form or another sheet of paper, any treatment processes used at the active sewage sludge unit to reduce vector attraction properties of sewage sludge: _____
   _____
   _____

4. Ground Water Monitoring.

a. Is ground water monitoring currently conducted at this active sewage sludge unit or are ground water monitoring data otherwise available for this active sewage sludge unit? ___Yes ___No
   If yes, provide a copy of available ground water monitoring data. Also provide a written description of the well locations, the approximate depth to ground water, and the ground water monitoring procedures used to obtain these data.

b. Has a ground water monitoring program been prepared for this active sewage sludge unit?
   ___Yes ___No If yes, submit a copy of the ground water monitoring program with this application.

c. Have you obtained a certification from a qualified ground water scientist that the aquifer below the active sewage sludge unit has not been contaminated? ___Yes ___No
   If yes, submit a copy of the certification with this application.

5. Site-Specific Limits.

Are you seeking site-specific pollutant limits for the sewage sludge placed on the active sewage sludge unit?
___Yes ___No If yes, submit information to support the request for site-specific pollutant limits with this application.

Proposed Amelia STP Flow Schematic

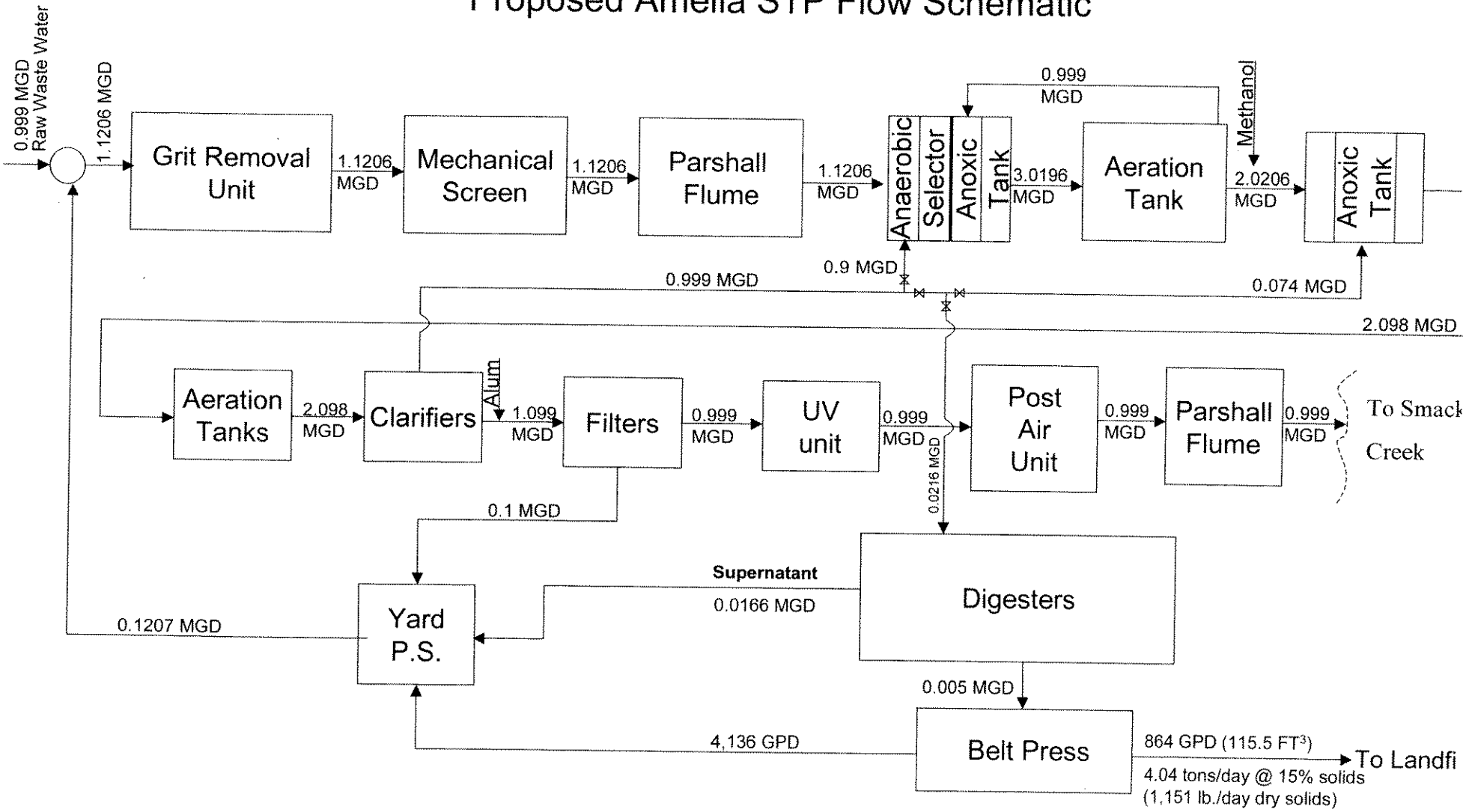

Proposed Amelia STP Flow Schematic

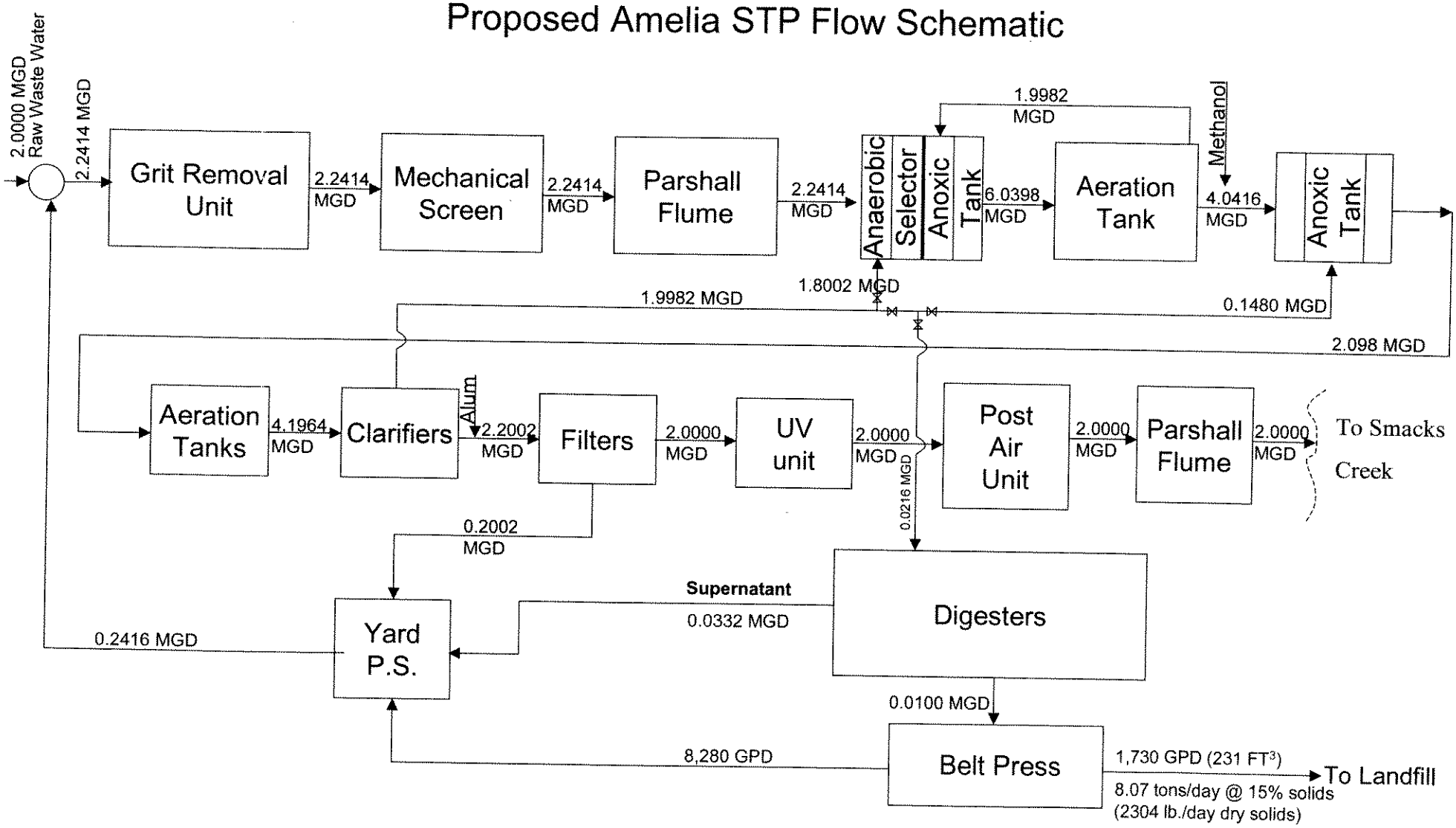
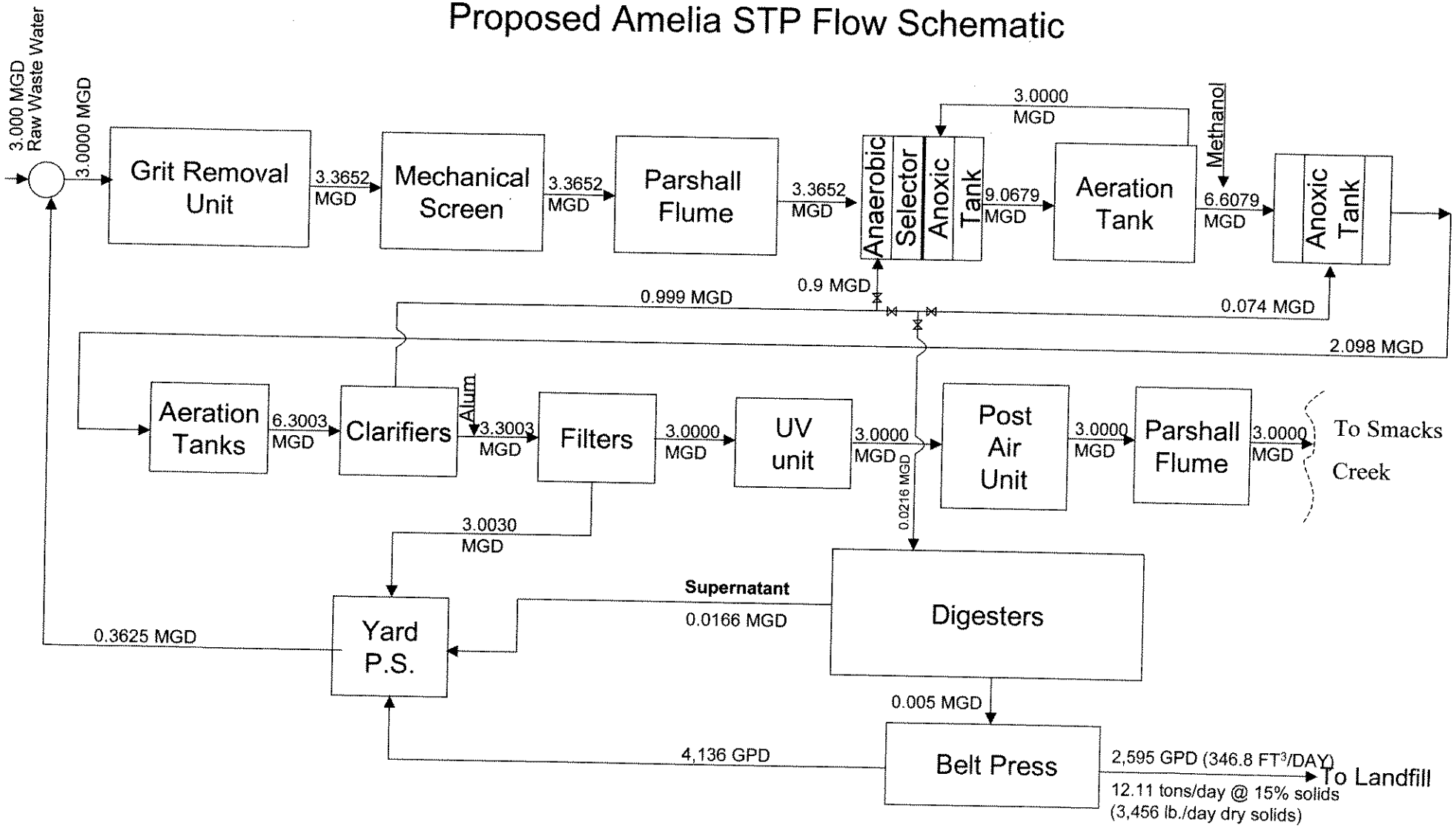
Proposed Amelia STP Flow Schematic