Attachment 1 - Flow Frequency Memo

MEMORANDUM

DEPARTMENT OF ENVIRONMENTAL QUALITY
Piedmont Regional Office
4949-A Cox Road Glen Allen, Virginia 23060

SUBJECT: Flow Frequency Determination / 303(d) Status
Philip Morris Park 500 – VA0026557

TO: Jaime Bauer

FROM: Jennifer V. Palmore, P.G.

DATE: March 4, 2009

COPIES: File

The Philip Morris Park 500 facility discharges to the James River near Bermuda Hundred in Chesterfield County, VA. The discharge is located at rivermile 2-JMS085.73. Flow frequencies have been requested at this site for use in developing effluent limitations for the VPDES permit. At the discharge point the river is tidally influenced and flow frequencies cannot be determined. The freshwater inflow into the James River at the fall line is reported, however the current default tidal dilution rations should continue to be applied to permit limitations.

The flow frequencies for the freshwater inflow were developed based on a drainage area comparison between the fall line and the USGS continuous record gage on the James River at the Route 45 Bridge in Cartersville (#02035000). The Cartersville gage has been in operation from 1898 through present. However, the flow in the James is currently regulated by guaranteed released from Gathwright Dam (Lake Moomaw), therefore the flow frequencies for the gage were developed by the Charlottesville office based on data since 1979 only. The data for the reference gage and the fall line are presented below.

James River at Cartersville, VA (#02035000):
Statistical Period: 1980-2003
Drainage area: 6252 mi^2

1Q30 = 540 cfs	High Flow 1Q10 = 1530 cfs
1Q10 = 638 cfs	High Flow 7Q10 = 1810 cfs
7Q10 = 717 cfs	High Flow 30Q10 = 2220 cfs
30Q10 = 918 cfs	HM = 3020 cfs
30Q5 = 1020 cfs	

James River at fall line:
Drainage Area = 6755 mi^2

1Q30 = 583 cfs (377 MGD)	High Flow 1Q10 = 1653 cfs (1068 MGD)
1Q10 = 689 cfs (446 MGD)	High Flow 7Q10 = 1956 cfs (1264 MGD)
7Q10 = 775 cfs (501 MGD)	High Flow 30Q10 = 2399 cfs (1550 MGD)
30Q10 = 992 cfs (641 MGD)	HM = 3263 cfs (2109 MGD)
30Q5 = 1102 cfs (712 MGD)	

This analysis does not address withdrawals, discharges, or springs influencing the flow of the James River between Cartersville and the fall line. The high flow months are January through May.

The James River at the discharge point was assessed as a Category 5A water in the 2008 305(b)/303(d) Water Quality Assessment Integrated Report. The applicable fact sheets are attached.

The James River from the Appomattox River to the Chickahominy River was originally listed on the 1998 list as fully supporting but threatened of the Aquatic Life Use goal based on chlorophyll a violations. During the 1998 cycle, EPA extended the segment upstream to the fall line and downgraded the river to not supporting the Aquatic Life Use, citing nutrient concerns. The Chesapeake Bay water quality standards have since been implemented. The Upper Tidal Freshwater James River from the fall line to the Appomattox failed the Shallow Water Subuse's submerged aquatic vegetation (SAV) criteria. In addition, a special site-specific chlorophyll standard for the mainstem James River was adopted during the 2008 cycle; the upper tidal freshwater segment exceeded both the spring and summer seasonal means. The Open Water Subuse was fully supporting in the 2008 cycle and the Migratory Spawning Subuse was not assessed.

The James River from the fall line to the Appomattox River has been assessed as not supporting of the Recreation use support goal since 1996. The TMDL for E. coli bacteria is due in 2010.

The James River is currently under a VDH Fish Consumption Restriction due to PCBs in fish tissue. The current advisory was last modified on 12/13/2004 and extends from the I-95 bridge downstream to the Hampton Roads Bridge Tunnel and includes the tidal portions of several tributaries. The TMDL is due in 2014.

The segment is considered to have three "observed effects" for the Fish Consumption Use. The James River and its tidal tributaries are considered fully supporting with observed effects for the Fish Consumption Use due to the VDH Fish Consumption Advisory related to kepone. In addition, DEQ has performed fish tissue monitoring at 2-JMS091.00. The site confirmed the PCB impairment discussed above; however there were also exceedances of DEQ's screening levels for arsenic and mercury in fish tissue.

The Wildlife and Public Water Supply Uses are considered fully supporting.

The James River has historically been considered a Tier 1 water. The Richmond-Crater Water Quality Management Plan allows the dissolved oxygen in the river to be depressed to 5.0 mg/L. In addition, the segment is failing the Aquatic Life Use due to inadequate SAV acreage and high chlorophyll a.

I have attached a data analysis for monitoring station 2-JMS087.01, which is located on the James River approximately 1.3 miles upstream of the discharge.

If you have any questions concerning this analysis, please let me know.

Attachment 2 - Process Descriptions & Diagrams

. Nature of Business

The Park 500 site houses the following: the Park 500 Plant, the Bermuda Hundred Machinery Storage Facility, the Bermuda Hundred Pilot Plant, the Park Manufacturing Facility (PMF), and a process Wastewater Treatment Plant (WWTP).

At the Park 500 Plant, tobacco materials are reclaimed for use in cigarette manufacturing. Dry tobacco materials are cut and pulped into an aqueous slurry. The soluble components in the slurry are extracted and the resulting tobacco stock is refined and made into a sheet similar to paper. The extracted solubles are concentrated by evaporation, flavored and applied onto the tobacco sheet. Alternately, dry tobacco is ground and blended into a flavored slurry prior to forming the tobacco sheet. The tobacco sheet is then dried, cut, packed and transported to other locations for use in cigarette manufacturing. During full-scale production, process wastewater is generated from Production Lines 1, 2, and 3. All process wastewater from this plant is discharged to the existing process Wastewater Treatment Plant (WWTP).

The Bermuda Machinery Storage Facility houses idle manufacturing equipment waiting for reallocation or recycling.

The Bermuda Hundred Pilot Plant is not currently in operation.

The Park Manufacturing Facility (PMF) is currently being used for offices, employee orientation, machine operator training, and a fitness center.

The process Wastewater Treatment Plant (WWTP) treats process wastewater for the Park 500 site by pretreatment (bar racks, grit chambers, and coarse screens), primary clarifiers, activated sludge aeration, ferric chloride addition, and secondary clarifiers. Disinfection is carried out by chlorination, and dechlorination is carried out by sulfunation. Gravity filters are used for final treatment. Effluent from the Wastewater Treatment Plant (WWTP) discharges to the James River.

There are two (2) oil/water separators associated with aboveground storage tanks that can discharge to the Wastewater Treatment Plant (WWTP). In addition, Park 500 has three (3) boilers and a water treatment plant. Wastewater from these operations is treated in the existing Wastewater Treatment Plant (WWTP).

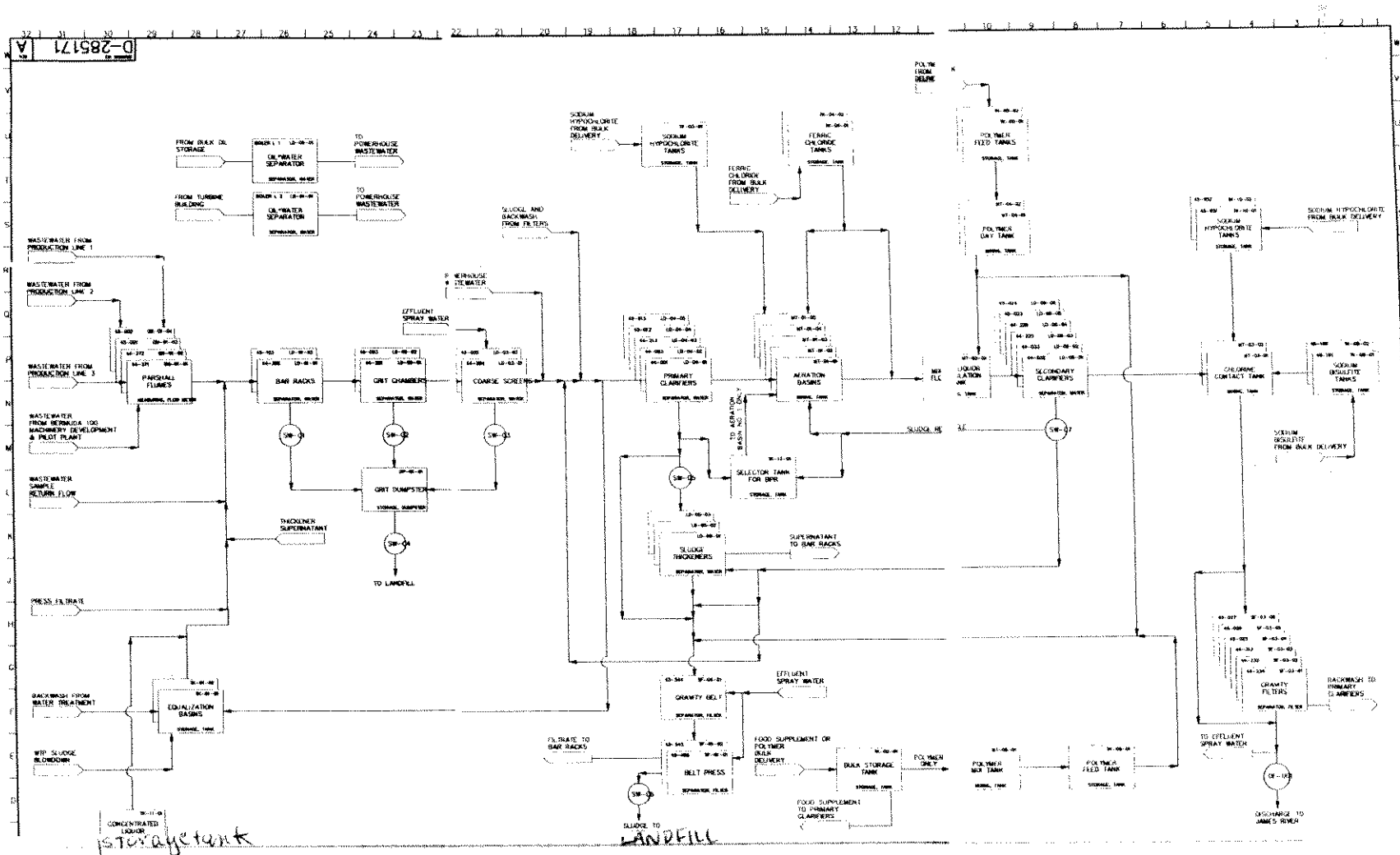
D-285171
A
FROM BULK OIL STORAGE
OIL/WATER SEPARATOR
TO POWERHOUSE WASTEWATER
FROM TURBINE BUILDING
OIL/WATER SEPARATOR
TO POWERHOUSE WASTEWATER
WASTEWATER FROM PRODUCTION LINE 1
WASTEWATER FROM PRODUCTION LINE 2
WASTEWATER FROM PRODUCTION LINE 3
WASTEWATER FROM BERMUDA 100 MACHINERY DEVELOPMENT & PILOT PLANT
WASTEWATER SAMPLE RETURN FLOW
PARSHALL FLUMES
BAR RACKS
GRIT CHAMBERS
COARSE SCREENS
GRIT DUMPSTER
TO LANDFILL
THICKENER SUPERNATANT
PRESS FILTRATE
BACKWASH FROM WATER TREATMENT
WTP SLUDGE BLOWDOWN
EQUALIZATION BASINS
CONCENTRATED LIQUOR
Storage tank
Concentrate Liquor From TANKER
EFFLUENT SPRAY WATER
SLUDGE AND BACKWASH FROM FILTERS
SODIUM HYPOCHLORITE FROM BULK DELIVERY
SODIUM HYPOCHLORITE TANKS
FERRIC CHLORIDE FROM BULK DELIVERY
FERRIC CHLORIDE TANKS
PRIMARY CLARIFIERS
TO AERATION BASIN ONLY
AERATION BASINS
SELECTOR TANK FOR BPR
SLUDGE THICKENERS
SUPERNATANT TO BAR RACKS
GRAVITY BELT
EFFLUENT SPRAY WATER
FILTRATE TO BAR RACKS
BELT PRESS
SLUDGE TO LANDFILL
FOOD SUPPLEMENT OR POLYMER BULK DELIVERY
BULK STORAGE TANK
POLYMER ONLY
FOOD SUPPLEMENT TO PRIMARY CLARIFIERS
POLYMER MIX TANK
POLYMER FEED TANK
POLYMER FEED TANKS
POLYMER DAY TANK
LIQUOR AERATION TANK
SECONDARY CLARIFIERS
SLUDGE RE
SODIUM HYPOCHLORITE TANKS
SODIUM HYPOCHLORITE FROM BULK DELIVERY
CHLORINE CONTACT TANK
SODIUM BISULFITE TANKS
SODIUM BISULFITE FROM BULK DELIVERY
GRAVITY FILTERS
BACKWASH TO PRIMARY CLARIFIERS
TO EFFLUENT SPRAY WATER
DISCHARGE TO JAMES RIVER

Attachment E

Form 2C – Existing Manufacturing, Commercial, Mining and Silvicultural Operations

II.B. Flows, Sources of Pollution, and Treatment Technologies

Description of Treatment	List Codes
1. Process wastewater passes through two (2) bar racks, two (2) grit chambers, and two (2) coarse screens.	1-M / Grit Removal 1-T / Screening
2. Two (2) surge basins may be used when flow equalization is required.	1-U / Sedimentation (Settling)
3. Five (5) primary clarifiers are used for settling followed by	1-U / Sedimentation (Settling)
4. Five (5) activated sludge aeration basins.	3-A / Activated Sludge
5. Ferric chloride is added to the basins to remove phosphorus.	1-G / Flocculation 1-U / Sedimentation (Settling)
6. A mixing chamber provides polymer addition as required.	2-D / Coagulation
7. Six (6) secondary clarifiers are used.	1-G / Flocculation 1-U / Sedimentation (Settling)
8. Two (2) chlorine contact chambers provide a minimum of 30 minutes contact time.	2-F / Disinfection (Chlorine)
9. Sodium bisulfite is added to the final cell of the chlorine contacting chamber to remove residual chlorine.	2-E / Dechlorination
10. A total of six (6) multimedia gravity filters may be used as required to provide final treatment prior to discharge.	1-Q / Multimedia Filtration 4-A / Discharge to Surface Water
11. Primary sludge may be pumped either to the belt filter presses or to the thickeners.	5-L / Gravity Thickening
12. Secondary sludge may be pumped either to the belt filter presses, thickeners, or the influent to the primary clarifiers.	5-L / Gravity Thickening
13. Chemical conditioners are added as required prior to dewatering on two (2) belt filter presses.	5-E / Chemical Conditioners 5-C / Belt Filtration
14. Contractors dispose of dewatered solids by composting and landfill. Disposal sites are fully permitted.	5-Q / Landfill 5-G / Composting
15. A three-zone concrete Anoxic Selector Tank on the number 1 aeration basin provides biological reduction of phosphorus.	3-D / Nitrification - Denitrification
16. A Hummix mixer, blower, and the associated plumbing installed on the final lift pumps achieve the required D.O. levels.	1-O / Mixing
17. Dispersion of the final effluent into the river is achieved at the outfall termination to provide enhanced mixing.	1-O / Mixing

Park 500
Water Flow Diagram
(Estimated)

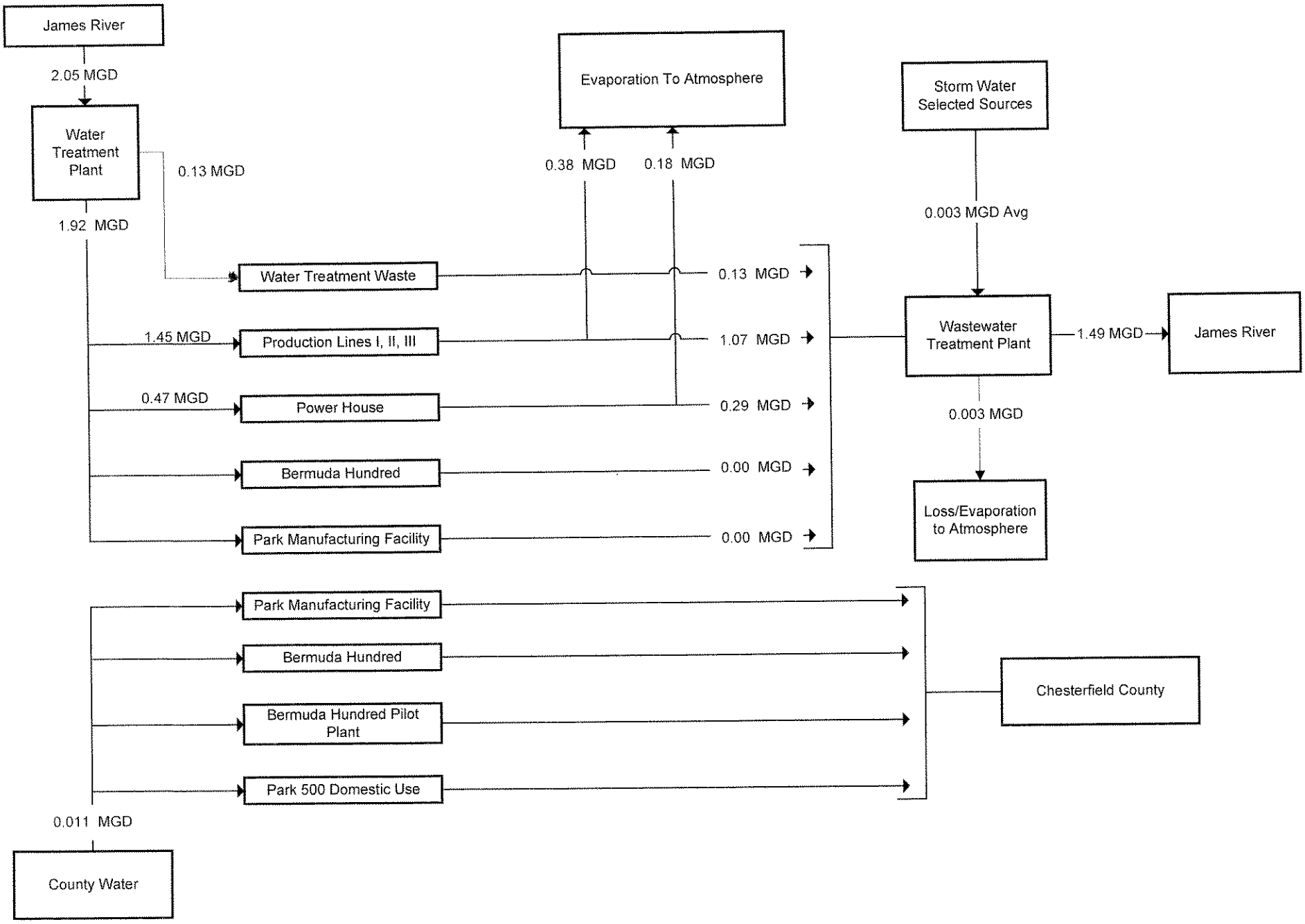

Document Owner: Utilities Engineer

14 May 2009

Attachment 3 - Topo Map

ATTACHMENT A – MAP

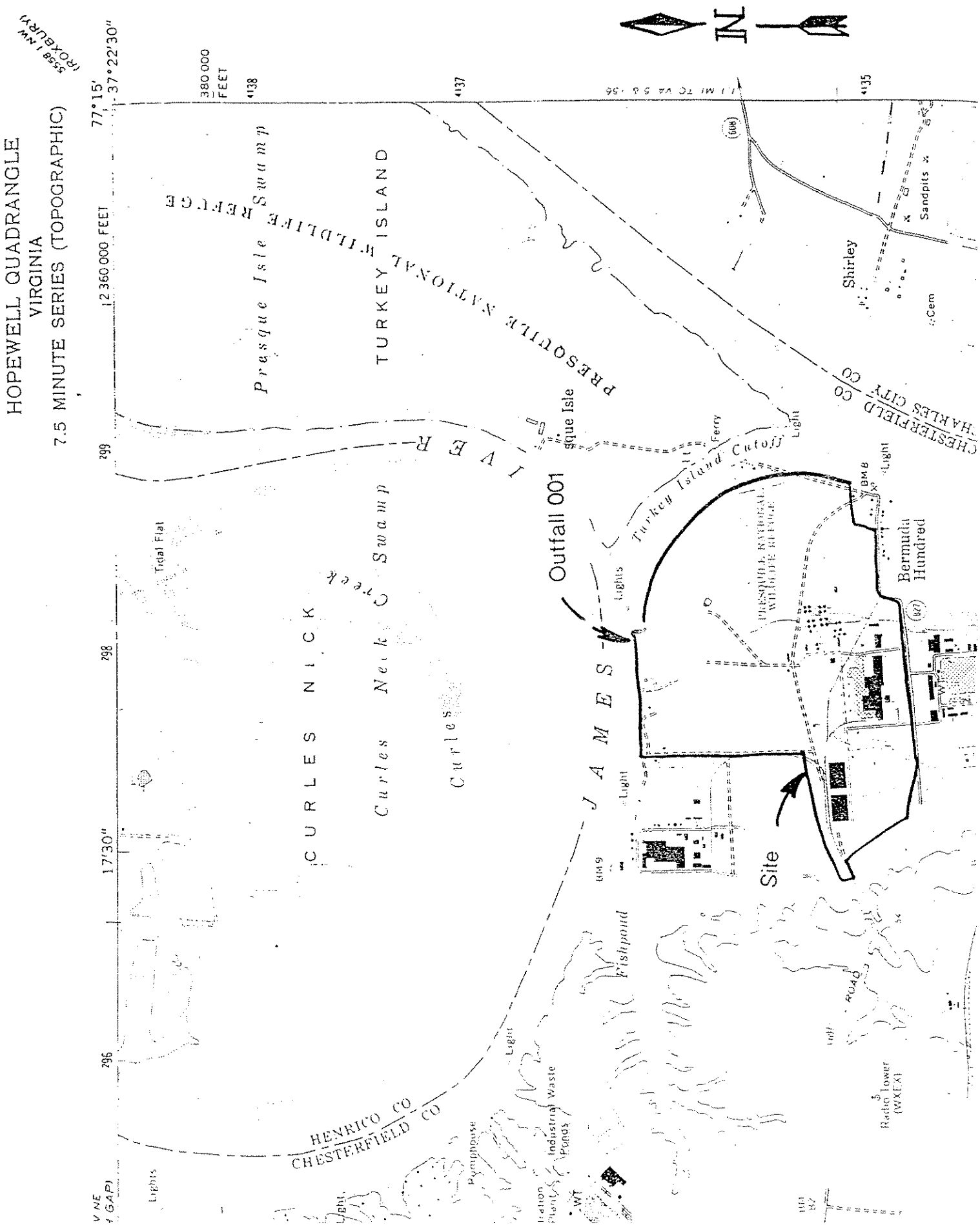

Attachment 4 - Ambient Stream Data for Station 2-JMS087-01

Station ID	Collection Date	Depth Desc	Depth	Temp Celcius	Field Ph	Do Probe	Do Winkler	Log Temp
2-JMS087.01	5/26/1974	S	304.5	22.78	7.3		6.5	1.3575537
2-JMS087.01	6/7/1974	S	304.5	22.78	7.5		8.4	1.3575537
2-JMS087.01	7/2/1974	S	304.5	26.67	7.5		8	1.4260230
2-JMS087.01	7/26/1974	S	304.5	28.89	7.3		5.9	1.4607475
2-JMS087.01	8/5/1974	S	304.5	28.33	7.1		6.7	1.4522466
2-JMS087.01	9/26/1974	S	304.5	24	7.5		7.8	1.3802112
2-JMS087.01	10/25/1974	S	304.5	17.22	7.5		10.19	1.2360331
2-JMS087.01	5/1/1975	S	304.5	17.22	7.2		8.1	1.2360331
2-JMS087.01	6/4/1975	S	304.5		7.3		7.5	
2-JMS087.01	6/24/1975	S	304.5	28.89	7.5		7.4	1.4607475
2-JMS087.01	6/30/1975	S	304.5	27.22	7.2		7	1.4348881
2-JMS087.01	7/28/1975	S	304.5	27.78	7.5		6	1.4437322
2-JMS087.01	8/13/1975	S	304.5	28.33	7.5		6.5	1.4522466
2-JMS087.01	8/16/1975	S	304.5	30	7.5		6.8	1.4771213
2-JMS087.01	9/3/1975	S	304.5	26.11	7.5		7.2	1.4168069
2-JMS087.01	10/1/1975	S	304.5	20	7.4		8.5	1.3010300
2-JMS087.01	2/12/1976	S	304.5	5.56	7.5		12.59	0.7450748
2-JMS087.01	3/11/1976	S	304.5	12.22	7.5		9.2	1.0870712
2-JMS087.01	5/4/1976	S	304.5	20.5	7.6		8.6	1.3117539
2-JMS087.01	6/7/1976	S	304.5	22.22	7.3		8	1.3467441
2-JMS087.01	5/22/1978	S	304.5	20.5	8		8.3	1.3117539
2-JMS087.01	5/22/1978	S	304.5					
2-JMS087.01	6/15/1978	S	304.5	6	8		4.1	0.7781513
2-JMS087.01	7/11/1978	S	304.5	28.5	7.8		5.1	1.4548449
2-JMS087.01	8/3/1978	S	304.5	2.9	7.5		6.7	0.4623980
2-JMS087.01	9/25/1978	S	304.5	7	8.3		7.4	0.8450980
2-JMS087.01	12/12/1978	S	304.5	0	7.5		9.7	
2-JMS087.01	4/24/1979	S	304.5	8	7.5		9.4	0.9030900
2-JMS087.01	5/19/1980	S	304.5	22	8		8	1.3424227
2-JMS087.01	7/16/1980	S	304.5	28	8.5		8.6	1.4471580
2-JMS087.01	10/20/1980	S	304.5	19	8.2		9	1.2787536
2-JMS087.01	7/27/1981	S	304.5	31	9.1		8.8	1.4913617
2-JMS087.01	9/8/1981	S	304.5	27	7.4		5.3	1.4313638
2-JMS087.01	11/16/1981	S	304.5	12.5	7.2		6.1	1.0969100
2-JMS087.01	5/13/1982	S	304.5	23	7.5		6.6	1.3617278
2-JMS087.01	6/24/1982	S	304.5	24.5	7.2		6.6	1.3891661
2-JMS087.01	8/9/1982	S	304.5	29.5	7.1		5.3	1.4698220
2-JMS087.01	10/28/1982	S	304.5	14	7.5		9.6	1.1461280
2-JMS087.01	11/18/1982	S	304.5	11.5	6.7		9.2	1.0606978
2-JMS087.01	5/17/1983	S	304.5	20.5	7.8		8.3	1.3117539
2-JMS087.01	6/28/1983	S	304.5	28	7.1		7.8	1.4471580
2-JMS087.01	8/16/1983	S	0.91	28	7.9		7.6	1.4471580
2-JMS087.01	8/16/1983	M	2.74					
2-JMS087.01	8/16/1983	B	33.83					
2-JMS087.01	8/30/1983	S	2.74					
2-JMS087.01	8/30/1983	B	30.78					
2-JMS087.01	9/20/1983	S	0.91	26	8		7.5	1.4149733
2-JMS087.01	9/20/1983	B	31.7					
2-JMS087.01	9/20/1983	M	2.74					

Station ID	Collection Date	Depth Desc	Depth	Temp Celcius	Field Ph	Do Probe	Do Winkler	Log Temp
2-JMS087.01	9/27/1983	S	0.91					
2-JMS087.01	9/27/1983	B	29.87					
2-JMS087.01	10/3/1983	M	2.74					
2-JMS087.01	10/3/1983	S	0.91	21	7.7		7.4	1.3222193
2-JMS087.01	10/3/1983	B	33.83	20.5	7.7		6.7	1.3117539
2-JMS087.01	7/7/1994	S	0.3	32.1	7.7		7.5	1.5065050
2-JMS087.01	7/14/1994	S	0.3	31.46	7.15	5.29		1.4977587
2-JMS087.01	7/28/1994	S	0.3	30	7.13	5.58		1.4771213
2-JMS087.01	8/11/1994	S	0.3	30.05	7.63	8.87		1.4778445
2-JMS087.01	8/18/1994	S	0.3	29.1	7.25	6.04		1.4638930
2-JMS087.01	8/30/1994	S	0.3	28.3	7.2	7.27		1.4517864
2-JMS087.01	9/8/1994	S	0.3	26.5	7.62	8.8		1.4232459
2-JMS087.01	9/13/1994	S	0.3	26.53	7.77	9.22		1.4237372
2-JMS087.01	9/26/1994	S	0.3	24.05	7.36	7.15		1.3811151
2-JMS087.01	10/12/1994	S	0.3	19.24	7.92	10.08		1.2842051
2-JMS087.01	10/17/1994	S	0.3	18.5	8	10.9		1.2671717
2-JMS087.01	10/25/1994	S	0.3	18.89	7.54	9.27		1.2762320
2-JMS087.01	11/30/1994	S	0.3	12.5	7.14	8.9		1.0969100
2-JMS087.01	12/6/1994	S	0.3	12.9	7.15	8.7		1.1105897
2-JMS087.01	1/25/1995	S	0.3	7.2	7.38	12		0.8573325
2-JMS087.01	2/27/1995	S	0.3	9.3	7.49	11.4		0.9684829
2-JMS087.01	3/23/1995	S	0.3	15.7	7.35	9.8		1.1958997
2-JMS087.01	4/18/1995	S	0.3	18.1	8.38	12		1.2576786
2-JMS087.01	5/3/1995	S	0.3	18.13	7.24	8.28		1.2583978
2-JMS087.01	5/18/1995	S	0.3	22.67	7.08	7.58		1.3554515
2-JMS087.01	5/23/1995	S	0.3	24.5	7.39	8.8		1.3891661
2-JMS087.01	6/1/1995	S	0.3	25.15	7.03	7.77		1.4005380
2-JMS087.01	6/20/1995	S	0.3	26.4	7.38	8.6		1.4216039
2-JMS087.01	7/18/1995	S	0.3	31.1	7.1	7.2		1.4927604
2-JMS087.01	7/31/1995	S	0.3	32.57	7.54	5.96		1.5128178
2-JMS087.01	8/23/1995	S	0.3	30.8	7.92	8.4		1.4885507
2-JMS087.01	8/28/1995	S	0.3	29.35	6.56	4.9		1.4676081
2-JMS087.01	9/11/1995	S	0.3	27.88	6.49	6.2		1.4452928
2-JMS087.01	9/20/1995	S	0.3					
2-JMS087.01	9/21/1995	S	0.3	24.8	7.41	6.7		1.3944517
2-JMS087.01	10/5/1995	S	0.3	23.65	7.29	6.82		1.3738311
2-JMS087.01	10/19/1995	S	0.3	20.8	7.35	8.8		1.3180633
2-JMS087.01	10/24/1995	S	0.3	16.33	7.14	9.35		1.2129862
2-JMS087.01	11/20/1995	S	0.3	8.47	7.18	11.41		0.9278834
2-JMS087.01	12/14/1995	S	0.3	5.97	7.25	12.38		0.7759743
2-JMS087.01	1/29/1996	S	0.3	4.4	7.11	13.36		0.6434527
2-JMS087.01	2/20/1996	S	0.3	5	7.23	12.85		0.6989700
2-JMS087.01	3/25/1996	S	0.3	9.39	7.18	11.78		0.9726656
2-JMS087.01	4/29/1996	S	0.3	19.72	7.75	9.49		1.2949069
2-JMS087.01	5/6/1996	S	0.3	21.92	8.32	8.24		1.3408405
2-JMS087.01	5/15/1996	S	0.3	20.66	7.56	8.98		1.3151303
2-JMS087.01	5/28/1996	S	0.3	21.85	7.11	7.12		1.3394514
2-JMS087.01	6/3/1996	S	0.3	22.02	7.68	8.96		1.3428173
2-JMS087.01	6/12/1996	S	0.3	26.69	7.28	7.42		1.4263486

Station ID	Collection Date	Depth Desc	Depth	Temp Celcius	Field Ph	Do Probe	Do Winkler	Log Temp
2-JMS087.01	6/18/1996	S	0.3	28.9	7.36	7.99		1.4608978
2-JMS087.01	7/1/1996	S	0.3	29.62	7.41	7		1.4715851
2-JMS087.01	7/15/1996	S	0.3	29.14	7.19	6.75		1.4644895
2-JMS087.01	7/23/1996	S	0.3	30.06	7.07	6.95		1.4779890
2-JMS087.01	8/1/1996	S	0.3	29.52	7.1	6.07		1.4701164
2-JMS087.01	8/15/1996	S	0.3	26.25	7.16	6.85		1.4191293
2-JMS087.01	8/20/1996	S	0.3	28.65	7.43	7.5		1.4571246
2-JMS087.01	9/16/1996	S	0.3	22.93	7.35	7.5		1.3604041
2-JMS087.01	9/24/1996	S	0.3	21.8	7.52	8.18		1.3384565
2-JMS087.01	9/30/1996	S	0.3	22.23	7.62	7.92		1.3469395
2-JMS087.01	10/9/1996	S	0.3	17.6	7.51	8.82		1.2455127
2-JMS087.01	10/22/1996	S	0.3	16.55	7.17	8.45		1.2187980
2-JMS087.01	10/30/1996	S	0.3	18.07	7.3	8.63		1.2569582
2-JMS087.01	11/19/1996	S	0.3	8.04	7.07	12.28		0.9052560
2-JMS087.01	12/10/1996	S	0.3	5.5	6.83	12.6		0.7403627
2-JMS087.01	1/21/1997	S	0.3	2.25	6.8	14.02		0.3521825
2-JMS087.01	2/18/1997	S	0.3	6.8	6.94	14.2		0.8325089
2-JMS087.01	3/18/1997	S	0.3	11.24	7.56	11.29		1.0507663
2-JMS087.01	4/22/1997	S	0.3	15.44	7.73	10.34		1.1886473
2-JMS087.01	5/21/1997	S	0.3	22.8	7.62	8.42		1.3579348
2-JMS087.01	5/27/1997	S	0.3	22.76	7.37	6.84		1.3571723
2-JMS087.01	5/28/1997	S	0.3	22.72	7.4	7.75		1.3564083
2-JMS087.01	6/3/1997	S	0.3	23.42	7.1	7.12		1.3695869
2-JMS087.01	6/23/1997	S	0.3	29.77	7.89	7.9		1.4737788
2-JMS087.01	6/24/1997	S	0.3	31.13	8.16	8.19		1.4931791
2-JMS087.01	7/9/1997	S	0.3	30.98	7.47	6.1		1.4910814
2-JMS087.01	7/15/1997	S	0.3	31.24	7.76			1.4947110
2-JMS087.01	7/23/1997	S	0.3	30.67	7.2			1.4867138
2-JMS087.01	8/7/1997	S	0.3	29.28	7.32	6.77		1.4665711
2-JMS087.01	8/19/1997	S	0.3	30.36	7.5	6.86		1.4823018
2-JMS087.01	8/21/1997	S	0.3	30.41	7.23	6.14		1.4830164
2-JMS087.01	9/4/1997	S	0.3	27.63	7.77	7.5		1.4413809
2-JMS087.01	9/23/1997	S	0.3	26.04	7.67	7.85		1.4156410
2-JMS087.01	10/2/1997	S	0.3	22.07	7.71	8.15		1.3438023
2-JMS087.01	10/20/1997	S	0.3	19.95	7.44	7.42		1.2999429
2-JMS087.01	10/21/1997	S	0.3					
2-JMS087.01	10/21/1997	S	0.3	19.74	7.39	7.16		1.2953471
2-JMS087.01	11/18/1997	S	0.3	10.46	7.32	10.41		1.0195317
2-JMS087.01	12/10/1997	S	0.3	7.92	7.37	11.08		0.8987252
2-JMS087.01	1/21/1998	S	0.3	6.69	7.56	12		0.8254261
2-JMS087.01	2/18/1998	S	0.3	7.76	7.03	11.88		0.8898617
2-JMS087.01	3/17/1998	S	0.3	7.96	7.46	12.6		0.9009131
2-JMS087.01	4/21/1998	S	0.3	15.82	7.4	10.6		1.1992065
2-JMS087.01	5/18/1998	S	0.3	22.45	7.76	8.8		1.3512163
2-JMS087.01	5/19/1998	S	0.3	23.64	7.8	9		1.3736475
2-JMS087.01	5/27/1998	S	0.3	24.64	7.87	7.9		1.3916407
2-JMS087.01	6/17/1998	S	0.3	26.79	7.91	7.96		1.4279727
2-JMS087.01	6/23/1998	S	0.3	29.23	7.96	9.12		1.4658288
2-JMS087.01	6/30/1998	S	0.3	31.27	7.48	6.6		1.4951279

Station ID	Collection Date	Depth Desc	Depth	Temp Celcius	Field Ph	Do Probe	Do Winkler	Log Temp
2-JMS087.01	7/14/1998	S	0.3	30.4	7.62	8.9		1.4828736
2-JMS087.01	7/21/1998	S	0.3	32.2	8.58	9.39		1.5078559
2-JMS087.01	7/28/1998	S	0.3	31.9	7.62	7.4		1.5037907
2-JMS087.01	8/11/1998	S	0.3	31.36	7.62	6.63		1.4963761
2-JMS087.01	8/18/1998	S	0.3	30.8	7.71	7.8		1.4885507
2-JMS087.01	8/25/1998	S	0.3	31.14	8.01	7.25		1.4933186
2-JMS087.01	9/14/1998	S	0.3	27.54	8.6	9.61		1.4399639
2-JMS087.01	9/22/1998	S	0.3	28.35	8.21	7.68		1.4525531
2-JMS087.01	9/29/1998	S	0.3	27.43	7.8	7.4		1.4382258
2-JMS087.01	10/13/1998	S	0.3	22.45	7.78	7.8		1.3512163
2-JMS087.01	10/20/1998	S	0.3	20.64	7.85	9.11		1.3147097
2-JMS087.01	10/26/1998	S	0.3	18.93	7.74	9.4		1.2771506
2-JMS087.01	11/18/1998	S	0.3	14	7.68	10.85		1.1461280
2-JMS087.01	12/15/1998	S	0.3	12.46	7.19	10.63		1.0955180
2-JMS087.01	1/19/1999	S	0.3	7.24	7.24	11.9		0.8597386
2-JMS087.01	2/23/1999	S	0.3	8.25	7.28	11.77		0.9164539
2-JMS087.01	3/23/1999	S	0.3	10.67	6.97	10.67		1.0281644
2-JMS087.01	4/20/1999	S	0.3	18.8	7.75	9.03		1.2741578
2-JMS087.01	5/11/1999	S	0.3					
2-JMS087.01	5/20/1999	S	0.3	22.1	7.34	8.3		1.3443923
2-JMS087.01	5/25/1999	S	0.3	23.6	7.41	7.4		1.3729120
2-JMS087.01	6/7/1999	S	0.3	28.36	7.82	7.6		1.4527062
2-JMS087.01	6/21/1999	S	0.3	25.47	7.16	7.05		1.4060289
2-JMS087.01	6/22/1999	S	0.3	24.9	7.25	7.78		1.3961993
2-JMS087.01	7/7/1999	S	0.3	32.69	7.55	6.86		1.5144149
2-JMS087.01	7/20/1999	S	0.3	31.84	7.77	8.42		1.5029731
2-JMS087.01	7/21/1999	S	0.3	31.34	7.7	7.1		1.4960990
2-JMS087.01	8/10/1999	S	0.3	29.6	7.84	7.28		1.4712917
2-JMS087.01	8/17/1999	S	0.3	32.17	7.88	8.42		1.5074511
2-JMS087.01	8/31/1999	S	0.3	26.81	7.55	7.05		1.4282968
2-JMS087.01	9/13/1999	S	0.3	25.97	7.44	7.33		1.4144719
2-JMS087.01	9/21/1999	S	0.3	22.28	6.88	8		1.3479152
2-JMS087.01	9/29/1999	S	0.3	22.6	7.03	8		1.3541084
2-JMS087.01	10/13/1999	S	0.3	20.29	7.2	8.08		1.3072820
2-JMS087.01	10/26/1999	S	0.3	16	7.36	9.4		1.2041200
2-JMS087.01	10/28/1999	S	0.3	15.95	7.28	9.07		1.2027607
2-JMS087.01	11/18/1999	S	1					
2-JMS087.01	11/18/1999	S	0.3	12.7	7.64	11.7		1.1038037
2-JMS087.01	12/21/1999	S	0.3	8.91	7.33	12		0.9498777
2-JMS087.01	1/18/2000	S	0.3	5.96	7.14	11.8		0.7752463
2-JMS087.01	2/23/2000	S	0.3	8.5	7.13	11.77		0.9294189
2-JMS087.01	3/28/2000	S	0.3	14.6	7.22	9.4		1.1643529
2-JMS087.01	4/24/2000	S	0.3	17.4	7.11	8.9		1.2405492
2-JMS087.01	5/1/2000	S	0.3	16.82	7.26	9.24		1.2258260
2-JMS087.01	5/22/2000	S	0.3	25.65	7.19	6.25		1.4090874
2-JMS087.01	5/23/2000	S	0.3	25.3	7.24	5.98		1.4031205
2-JMS087.01	6/5/2000	S	0.3	25	7.45	8.3		1.3979400
2-JMS087.01	6/20/2000	S	0.3	30.3	7.51	6.1		1.4814426
2-JMS087.01	6/22/2000	S	0.3					

Station ID	Collection Date	Depth Desc	Depth	Temp Celcius	Field Ph	Do Probe	Do Winkler	Log Temp
2-JMS087.01	6/22/2000	S	0.3	30.35	7.49	6.77		1.4821587
2-JMS087.01	7/11/2000	S	0.3	29.67	8.19	8.36		1.4723175
2-JMS087.01	7/18/2000	S	0.3	30.44	8.07	8.49		1.4834446
2-JMS087.01	7/26/2000	S	0.3	26.85	7.22	6.23		1.4289443
2-JMS087.01	8/7/2000	S	0.3	29.8	7.7	7.83		1.4742163
2-JMS087.01	8/22/2000	S	0.3	29	8.14	8.7		1.4623980
2-JMS087.01	8/23/2000	S	0.3	28.31	8.03	8.31		1.4519399
2-JMS087.01	9/13/2000	S	0.3	26.6	7.47	8.53		1.4248816
2-JMS087.01	9/26/2000	S	0.3	22.3	7.6	7.39		1.3483049
2-JMS087.01	10/2/2000	S	0.3	20.71	7.51	8.12		1.3161801
2-JMS087.01	10/16/2000	S	0.3	20.79	7.94	9.87		1.3178545
2-JMS087.01	10/24/2000	S	1	19.9	8.61	10.7		1.2988531
2-JMS087.01	10/30/2000	S	0.3	19.42	7.69	8.74		1.2882492
2-JMS087.01	11/28/2000	S	0.3					
2-JMS087.01	1/23/2001	S	0.3	5.18	6.86	12.41		0.7143298
2-JMS087.01	2/20/2001	S	0.3	9.9	7.66	11.7		0.9956352
2-JMS087.01	3/27/2001	S	0.3	10.4	7.11	11.6		1.0170333
2-JMS087.01	4/24/2001	S	0.3	21.04	7.77	9.8		1.3230457
2-JMS087.01	5/7/2001	S	0.3	23.45	7.58	7.63		1.3701428
2-JMS087.01	5/30/2001	S	0.3	20	7.4	8.5		1.3010300
2-JMS087.01	6/13/2001	S	0.3	28.78	7.49	7.73		1.4590908
2-JMS087.01	6/19/2001	S	0.3	29.07	7.34	7.44		1.4634450
2-JMS087.01	6/28/2001	S	0.3	30.79	7.48	8.18		1.4884097
2-JMS087.01	7/5/2001	S	0.3	30.95	7.32	7.27		1.4906607
2-JMS087.01	7/24/2001	S	0.3	30.58	7.51	7.59		1.4854375
2-JMS087.01	7/30/2001	S	0.3	26.35	7.24	6.87		1.4207806
2-JMS087.01	8/6/2001	S	0.3	30.33	8.12	7.76		1.4818724
2-JMS087.01	8/21/2001	S	0.3	30.16	7.47	6.62		1.4794313
2-JMS087.01	8/23/2001	S	0.3	30.4	7.42	6.43		1.4828736
2-JMS087.01	9/18/2001	S	0.3	24.26	8.46	9.37		1.3848908
2-JMS087.01	10/16/2001	S	0.3	20.63	8.38	10.38		1.3144992
2-JMS087.01	11/27/2001	S	0.3	15.54	7.72	9.96		1.1914510
2-JMS087.01	12/12/2001	S	0.3					
2-JMS087.01	1/22/2002	S	0.3	9.57	7	11.58		0.9809119
2-JMS087.01	2/19/2002	S	0.3	10.86	7.59	10.17		1.0358298
2-JMS087.01	3/19/2002	S	0.3	14.39	7.45	8.46		1.1580608
2-JMS087.01	4/16/2002	S	0.3	22.42	8.49	11.38		1.3506356
2-JMS087.01	5/30/2002	S	0.3	28.34	8.75	11.01		1.4523998
2-JMS087.01	6/25/2002	S	0.3	30.44	7.64			1.4834446
2-JMS087.01	7/23/2002	S	0.3	30.94	7.87	7.07		1.4905203
2-JMS087.01	8/13/2002	S	0.3	32.6	8.14	7.97		1.5132176
2-JMS087.01	9/24/2002	S	0.3	26.94	7.78	7.8		1.4303976
2-JMS087.01	10/22/2002	S	0.3	19.35	7.49	6.63		1.2866810
2-JMS087.01	11/19/2002	S	0.3	11.05	6.97	12.31		1.0433623
2-JMS087.01	12/10/2002	S	0.3	5.92	7.29	13.05		0.7723217
2-JMS087.01	1/21/2003	S	0.3	4.01	7.42	13.64		0.6031444
2-JMS087.01	2/25/2003	S	0.3	4.55	6.98	12.34		0.6580114
2-JMS087.01	3/18/2003	S	0.3	11.72	7.52	10.78		1.0689276
2-JMS087.01	5/27/2003	S	0.3	18.1	6.92	8.43		1.2576786

Station ID	Collection Date	Depth Desc	Depth	Temp Celcius	Field Ph	Do Probe	Do Winkler	Log Temp
2-JMS087.01	6/24/2003	S	0.3	22.58	7.55	8.4		1.3537239
2-JMS087.01	7/15/2003	S	0.3	28.96	7.93	7.79		1.4617986
2-JMS087.01	8/26/2003	S	0.3	30.37	8.02	8.23		1.4824448
2-JMS087.01	10/28/2003	S	0.3	16.96	7.38	8.85		1.2294258
2-JMS087.01	11/18/2003	S	0.3	11.28	7.52	9.99		1.0523091
2-JMS087.01	12/16/2003	S	0.3	5.03	7.1	12.43		0.7015680
2-JMS087.01	2/25/2004	S	0.3	7.58	7.59	12.16		0.8796692
2-JMS087.01	3/23/2004	S	0.3	11.31	7.67	11.36		1.0534626
2-JMS087.01	4/20/2004	S	0.3	18.09	7.28	9.6		1.2574386
2-JMS087.01	5/18/2004	S	0.3		7.39			
2-JMS087.01	6/15/2004	S	0.3	27.01	7.49	8.06		1.4315246
2-JMS087.01	7/20/2004	S	0.3	31.19	8.02	7.28		1.4940154
2-JMS087.01	8/17/2004	S	0.3	25.3	7.1	6.55		1.4031205
2-JMS087.01	9/21/2004	S	0.3	21.38	7.15	8.35		1.3300077
2-JMS087.01	10/19/2004	S	0.3	17.97	7.56	8.81		1.2545481
2-JMS087.01	11/16/2004	S	0.3	10.68	7.28	10.67		1.0285713
2-JMS087.01	12/14/2004	S	0.3	8.89	7.6	11.18		0.9489018
2-JMS087.01	1/26/2005	S	0.3	2.92	7.36	13.24		0.4653829
2-JMS087.01	2/15/2005	S	0.3	9.43	7.54	11.49		0.9745117
2-JMS087.01	3/22/2005	S	0.3	11.79	7.67	11.35		1.0715138
2-JMS087.01	4/19/2005	S	0.3	17.2	7.79	11.35		1.2355284
2-JMS087.01	5/24/2005	S	0.3	21.57	7.26	7.4		1.3338501
2-JMS087.01	6/21/2005	S	0.3	27.7	7.42	6.64		1.4424798
2-JMS087.01	7/19/2005	S	0.3	32.39	7.95	8.47		1.5104109
2-JMS087.01	8/23/2005	S	0.3	31.9	7.53	6.61		1.5037907
2-JMS087.01	9/20/2005	S	0.3	29.3	7.74	6.91		1.4668676
2-JMS087.01	10/18/2005	S	0.3	19.77	7.47	8.13		1.2960067
2-JMS087.01	11/15/2005	S	0.3	16.2	8.08	10.48		1.2095150
2-JMS087.01	12/21/2005	S	0.3	5.22	7.28	12.17		0.7176705
2-JMS087.01	1/17/2006	S	0.3	6.6	7.26	12.35		0.8195439
2-JMS087.01	2/21/2006	S	0.3	7.9	6.72	12.63		0.8976271
2-JMS087.01	3/20/2006	S	0.3	15	8	10.6		1.1760913
2-JMS087.01	4/26/2006	S	0.3	21.5	7.6	7.8		1.3324385
2-JMS087.01	5/15/2006	S	0.3	22.2	7.5	8		1.3463530
2-JMS087.01	6/21/2006	S	0.3	28.1	8.1	8.2		1.4487063
2-JMS087.01	6/29/2006	S	0.3					
2-JMS087.01	7/24/2006	S	0.3	31	7.8	6.4		1.4913617
2-JMS087.01	8/22/2006	S	0.3	29.5	8	7.7		1.4698220
2-JMS087.01	9/26/2006	S	0.3	24.9	7.6	7.5		1.3961993
2-JMS087.01	10/30/2006	S	0.3	13	7.5	9.5		1.1139434
2-JMS087.01	11/15/2006	S	0.3	13.5	7.2	9.1		1.1303338
2-JMS087.01	1/24/2007	S	0.3	6.6	8	11.6		0.8195439
2-JMS087.01	2/20/2007	S	0.3	3.6	7.4	13		0.5563025
2-JMS087.01	3/19/2007	S	0.3	9.4	6.8	11.2		0.9731279
2-JMS087.01	4/30/2007	S	0.3	20.8	7.6	9.1		1.3180633
2-JMS087.01	5/30/2007	S	0.3	27.7	7.5	6.6		1.4424798
2-JMS087.01	6/18/2007	S	0.3	29.3	8.3	9.7		1.4668676
2-JMS087.01	7/23/2007	S	0.3	30	7.9	7.4		1.4771213
2-JMS087.01	8/20/2007	S	0.3	29.5	7.2	4.5		1.4698220

Station ID	Collection Date	Depth Desc	Depth	Temp Celcius	Field Ph	Do Probe	Do Winkler	Log Temp	
2-JMS087.01	9/24/2007	S	0.3	27	8.6	10.1		1.4313638	
2-JMS087.01	10/22/2007	S	0.3	23.1	8.7	10.8		1.3636120	
2-JMS087.01	11/13/2007	S	0.3	16.1	7.7	8.8		1.2068259	
2-JMS087.01	12/10/2007	S	0.3	11.7	7.6	10.6		1.0681859	
2-JMS087.01	1/23/2008	S	0.3	7.1	7.2	11.4		0.8512583	
2-JMS087.01	2/14/2008	S	0.3	9.3	6.9	10.5		0.9684829	
2-JMS087.01	3/18/2008	S	0.3	12.7	6.7	10		1.1038037	
2-JMS087.01	4/15/2008	S	0.3	16.8	6.6	8.7		1.2253093	
2-JMS087.01	5/22/2008	S	0.3	20.8	7.5	8.6		1.3180633	
2-JMS087.01	6/17/2008	S	0.3	31.5	7.8	7.3		1.4983106	
2-JMS087.01	7/15/2008	S	0.3	29.1	7.8	6.3		1.4638930	
2-JMS087.01	9/16/2008	S	0.3	27.1	7.2	5.3		1.4329693	
2-JMS087.01	10/21/2008	S	0.3	19.6	7.5	8.2		1.2922561	
2-JMS087.01	11/24/2008	S	0.3	8.8	7.9	11.3		0.9444827	
2-JMS087.01	12/9/2008	S	0.3	7.5	8.2	12.1		0.8750613	
2-JMS087.01	1/21/2009	S	0.3	3.9	7.3	12.5		0.5910646	
2-JMS087.01	2/19/2009	S	0.3	11.1	5.4	9.9		1.0453230	
90th Percentile				30.6	8.0			1.486	30.6
10th Percentile				7.8	7.1			0.9	7.9
Maximum				32.7	9.1		14.2		
Minimum				0.0	5.4		4.1		

Sta Id	Collection Date Time	Depth Desc	Depth	Container	Comment	00900 HARDNESS, TOTAL (MG/L AS CACO3) Value	Com Code	Log
2-JMS087.01	07/07/1994 15:00	S	0.3	R	STORET DATA CONVERSION	62		1.792392
2-JMS087.01	08/11/1994 14:50	S	0.3	R	STORET DATA CONVERSION	59		1.770852
2-JMS087.01	09/08/1994 14:35	S	0.3	R	STORET DATA CONVERSION	65		1.812913
2-JMS087.01	10/17/1994 15:20	S	0.3	R	STORET DATA CONVERSION	71		1.851258
2-JMS087.01	11/30/1994 14:45	S	0.3	R	STORET DATA CONVERSION	65		1.812913
2-JMS087.01	12/06/1994 15:40	S	0.3	R	STORET DATA CONVERSION	71		1.851258
2-JMS087.01	01/25/1995 14:30	S	0.3	R	STORET DATA CONVERSION	50		1.69897
2-JMS087.01	02/27/1995 14:45	S	0.3	R	STORET DATA CONVERSION	65		1.812913
2-JMS087.01	03/23/1995 15:30	S	0.3	R	STORET DATA CONVERSION	60		1.778151
2-JMS087.01	04/18/1995 15:10	S	0.3	R	STORET DATA CONVERSION	79		1.897627
2-JMS087.01	05/23/1995 14:50	S	0.3	R	STORET DATA CONVERSION	40		1.60206
2-JMS087.01	06/20/1995 15:20	S	0.3	R	STORET DATA CONVERSION	60		1.778151
2-JMS087.01	07/18/1995 15:00	S	0.3	R	STORET DATA CONVERSION	51		1.70757
2-JMS087.01	08/23/1995 15:30	S	0.3	R	STORET DATA CONVERSION	80		1.90309
2-JMS087.01	09/21/1995 14:25	S	0.3	R	STORET DATA CONVERSION	100		2
2-JMS087.01	10/19/1995 15:00	S	0.3	R	STORET DATA CONVERSION	92		1.963788
2-JMS087.01	11/20/1995 15:15	S	0.3	R	STORET DATA CONVERSION	60		1.778151
2-JMS087.01	12/14/1995 15:00	S	0.3	R	STORET DATA CONVERSION	55		1.740363
2-JMS087.01	01/29/1996 15:00	S	0.3	R	STORET DATA CONVERSION	26		1.414973
2-JMS087.01	02/20/1996 14:50	S	0.3	R	STORET DATA CONVERSION	60		1.778151
2-JMS087.01	03/25/1996 14:45	S	0.3	R	STORET DATA CONVERSION	52		1.716003
2-JMS087.01	04/29/1996 11:55	S	0.3	R	STORET DATA CONVERSION	60		1.778151
2-JMS087.01	05/15/1996 14:10	S	0.3	R	STORET DATA CONVERSION	62		1.792392
2-JMS087.01	06/18/1996 14:30	S	0.3	R	STORET DATA CONVERSION	48		1.681241
2-JMS087.01	07/23/1996 15:15	S	0.3	R	STORET DATA CONVERSION	59		1.770852
2-JMS087.01	08/20/1996 14:30	S	0.3	R	STORET DATA CONVERSION	84		1.924279
2-JMS087.01	09/24/1996 14:30	S	0.3	R	STORET DATA CONVERSION	67		1.826075
2-JMS087.01	10/22/1996 14:10	S	0.3	R	STORET DATA CONVERSION	64		1.80618
2-JMS087.01	11/19/1996 14:50	S	0.3	R	STORET DATA CONVERSION	54		1.732394
2-JMS087.01	12/10/1996 15:00	S	0.3	R	STORET DATA CONVERSION	47.7		1.678518
2-JMS087.01	01/21/1997 16:10	S	0.3	R	STORET DATA CONVERSION	60.3		1.780317
2-JMS087.01	02/18/1997 15:20	S	0.3	R	STORET DATA CONVERSION	43.3		1.636488
2-JMS087.01	03/18/1997 15:00	S	0.3	R	STORET DATA CONVERSION	55.1		1.741152
2-JMS087.01	04/22/1997 15:10	S	0.3	R	STORET DATA CONVERSION	67.7		1.830589
2-JMS087.01	05/28/1997 15:45	S	0.3	R	STORET DATA CONVERSION	65.9		1.818885
2-JMS087.01	06/24/1997 15:00	S	0.3	R	STORET DATA CONVERSION	64.9		1.812245
2-JMS087.01	07/15/1997 15:00	S	0.3	R	STORET DATA CONVERSION	73.4		1.865696
2-JMS087.01	08/19/1997 15:00	S	0.3	R	STORET DATA CONVERSION	70		1.845098
2-JMS087.01	09/23/1997 14:45	S	0.3	R	STORET DATA CONVERSION	71.8		1.856124
2-JMS087.01	10/21/1997 14:40	S	0.3	R	STORET DATA CONVERSION	87.2		1.940516
2-JMS087.01	11/18/1997 15:00	S	0.3	R	STORET DATA CONVERSION	67.6		1.829947
2-JMS087.01	12/10/1997 15:48	S	0.3	R	STORET DATA CONVERSION	69.9		1.844477
2-JMS087.01	01/21/1998 15:30	S	0.3	R	STORET DATA CONVERSION	42.6		1.62941
2-JMS087.01	02/18/1998 14:40	S	0.3	R	STORET DATA CONVERSION	41.4		1.617
2-JMS087.01	03/17/1998 15:10	S	0.3	R	STORET DATA CONVERSION	44.3		1.646404
2-JMS087.01	04/21/1998 15:00	S	0.3	R	STORET DATA CONVERSION	42.5		1.628389
2-JMS087.01	05/19/1998 15:10	S	0.3	R	STORET DATA CONVERSION	43.2		1.635484
2-JMS087.01	06/23/1998 15:35	S	0.3	R	STORET DATA CONVERSION	51.4		1.710963
2-JMS087.01	07/21/1998 14:50	S	0.3	R	STORET DATA CONVERSION	62.3		1.794488
2-JMS087.01	08/18/1998 15:00	S	0.3	R	STORET DATA CONVERSION	82.9		1.918555
2-JMS087.01	09/22/1998 17:10	S	0.3	R	STORET DATA CONVERSION	81.4		1.910624
2-JMS087.01	10/20/1998 16:00	S	0.3	R	STORET DATA CONVERSION	116		2.064458
2-JMS087.01	11/18/1998 15:00	S	0.3	R	STORET DATA CONVERSION	101		2.004321
2-JMS087.01	12/15/1998 15:00	S	0.3	R	STORET DATA CONVERSION	94		1.973128
2-JMS087.01	01/19/1999 15:00	S	0.3	R		82		1.913814
2-JMS087.01	02/23/1999 14:45	S	0.3	R		90		1.954243
2-JMS087.01	03/23/1999 15:00	S	0.3	R		52		1.716003
2-JMS087.01	04/20/1999 16:05	S	0.3	R		82		1.913814
2-JMS087.01	05/20/1999 15:00	S	0.3	R		52		1.716003
2-JMS087.01	06/22/1999 14:50	S	0.3	R		62.5		1.79588
2-JMS087.01	07/20/1999 16:00	S	0.3	R		85.7		1.932981
2-JMS087.01	08/17/1999 15:45	S	0.3	R		102		2.0086
2-JMS087.01	09/21/1999 10:00	S	0.3	R		39.3		1.594393
2-JMS087.01	11/18/1999 15:05	S	1	R		65.9		1.818885
2-JMS087.01	12/21/1999 14:45	S	0.3	R		66.8		1.824776
2-JMS087.01	01/18/2000 15:50	S	0.3	R		56.1		1.748963
2-JMS087.01	02/23/2000 13:50	S	0.3	R		44		1.643453

Sta Id	Collection Date Time	Depth Desc	Depth	Container	Comment	00900 HARDNESS, TOTAL (MG/L AS CACO3) Value	Com Code	Log
2-JMS087.01	03/28/2000 15:05	S	0.3	R		38		1.579784
2-JMS087.01	04/24/2000 15:15	S	0.3	R		37		1.568202
2-JMS087.01	05/23/2000 17:00	S	0.3	R		59		1.770852
2-JMS087.01	06/20/2000 15:40	S	0.3	R		70		1.845098
2-JMS087.01	07/18/2000 16:05	S	0.3	R		72		1.857332
2-JMS087.01	08/22/2000 14:55	S	0.3	R		80.2		1.904174
2-JMS087.01	09/26/2000 16:00	S	0.3	R		63.4		1.802089
2-JMS087.01	10/24/2000 15:00	S	1	R		80.2		1.904174
2-JMS087.01	11/28/2000 16:30	S	0.3	R	METER MALFUNCTION	93.6		1.971276
2-JMS087.01	01/23/2001 13:45	S	0.3	R		69.3		1.840733
2-JMS087.01	02/20/2001 13:00	S	0.3	R		69.2		1.840106
2-JMS087.01	03/27/2001 14:15	S	0.3	R		38		1.579784
2-JMS087.01	04/24/2001 13:30	S	0.3	R		45.8		1.660865
2-JMS087.01	06/19/2001 13:25	S	0.3	R		50.3		1.701568
2-JMS087.01	07/24/2001 14:10	S	0.3	R		65		1.812913
2-JMS087.01	08/21/2001 15:00	S	0.3	R		86.3		1.936011
2-JMS087.01	09/18/2001 15:45	S	0.3	R		81.7		1.912222
2-JMS087.01	10/16/2001 14:30	S	0.3	R		30		1.477121
2-JMS087.01	11/27/2001 15:00	S	0.3	R		124		2.093422
2-JMS087.01	12/12/2001 14:00	S	0.3	R	METER MALFUNCTION NO DATA COLLECTED	149		2.173186
2-JMS087.01	01/22/2002 15:00	S	0.3	R		107		2.029384
2-JMS087.01	02/19/2002 14:50	S	0.3	R		73.2		1.864511
2-JMS087.01	03/19/2002 15:00	S	0.3	R		92.3		1.965202
2-JMS087.01	04/16/2002 15:15	S	0.3	R		72.8		1.862131
2-JMS087.01	05/30/2002 16:00	S	0.3	R		64.6		1.810233
2-JMS087.01	06/25/2002 14:50	S	0.3	R		81.3		1.910091
2-JMS087.01	07/23/2002 14:30	S	0.3	R		93.4		1.970347
2-JMS087.01	08/13/2002 15:15	S	0.3	R		121		2.082785
2-JMS087.01	09/24/2002 15:00	S	0.3	R		152		2.181844
2-JMS087.01	10/22/2002 15:00	S	0.3	R		143		2.155336
2-JMS087.01	11/19/2002 15:15	S	0.3	R		36.9		1.567026
2-JMS087.01	12/10/2002 14:30	S	0.3	R		91.4		1.960946
2-JMS087.01	01/21/2003 15:00	S	0.3	R		54.9		1.739572
2-JMS087.01	02/25/2003 10:18	S	0.3	R	JAMES RIVER FLOODING. CRESTED LATE IN THE AFTERNOON.	50.1		1.699838
2-JMS087.01	03/18/2003 15:15	S	0.3	R		42.9		1.632457
2-JMS087.01	05/27/2003 15:51	S	0.3	R		40.9		1.611723
2-JMS087.01	06/24/2003 14:30	S	0.3	R		49		1.690196
2-JMS087.01	07/15/2003 14:45	S	0.3	R		51.5		1.711807
2-JMS087.01	08/26/2003 15:30	S	0.3	R		53		1.724276
2-JMS087.01	10/28/2003 15:10	S	0.3	R		66.5		1.822822
2-JMS087.01	11/18/2003 14:30	S	0.3	R		57		1.755875
2-JMS087.01	12/16/2003 14:45	S	0.3	R		46		1.662758
2-JMS087.01	02/25/2004 14:40	S	0.3	R		54		1.732394
2-JMS087.01	03/23/2004 14:40	S	0.3	R		60.7		1.783189
2-JMS087.01	04/20/2004 14:20	S	0.3	R		47.8		1.679428

Sta Id	Collection Date Time	Depth Desc	Depth	Container	Comment	00900 HARDNESS, TOTAL (MG/L AS CACO3) Value	Com Code	Log	
2-JMS087.01	05/18/2004 14:30	S	0.3	R	DO POSTCRUISE CALIBRATION DIFFERENCE BETWEEN INSTRUMENT VALUE AND THEORETICAL VALUE EXCEEDS QC CRITERIA OF 0.5 MG/L. DO POST CRUISE CALIBRATION CHECK DIFFERENCE = 1.62 MG/L. DO FIELD RESULTS REJECTED DUE TO QC CRITERIA. PER TELEPHONE CONVERSATION WITH LOU SEIVARD THE TEMPERATURE READINGS WERE SUSPECT DURING POST CRUISE CHECK - TEMPERATURE, SALINITY AND CONDUCTANCE WERE ALL REJECTED FOR QC PURPOSES SINCE HYDROLAB PROGRAMMING CORRECTS SALINITY AND CONDUCTANCE TO 25 DECREES C.	66		1.819544	
2-JMS087.01	06/15/2004 14:40	S	0.3	R		64		1.80618	
2-JMS087.01	07/20/2004 14:20	S	0.3	R	SPECIFIC CONDUCTANCE DATA CORRECTED FOR UNITS 8-10-04 BY CSJ PER CHARLIE MORGAN EMAIL 8-9-04 AND TELEPHONE CONVERSATION WITH LOU SIEVARD 8-10-04.	57.8		1.761928	
2-JMS087.01	08/17/2004 14:30	S	0.3	R		47.3		1.674861	
2-JMS087.01	09/21/2004 14:15	S	0.3	R		38.4		1.584331	
2-JMS087.01	10/19/2004 14:00	S	0.3	R		38		1.579784	
2-JMS087.01	11/16/2004 14:15	S	0.3	R		42		1.623249	
2-JMS087.01	12/14/2004 14:55	S	0.3	R		62		1.792392	
2-JMS087.01	01/26/2005 14:30	S	0.3	R		56		1.748188	
2-JMS087.01	02/15/2005 14:15	S	0.3	R		70		1.845098	
2-JMS087.01	03/22/2005 15:00	S	0.3	R		154		2.187521	
2-JMS087.01	04/19/2005 15:20	S	0.3	R		59.5		1.774517	
2-JMS087.01	05/24/2005 14:30	S	0.3	R		54		1.732394	
2-JMS087.01	06/21/2005 14:30	S	0.3	R		66		1.819544	
2-JMS087.01	07/19/2005 14:40	S	0.3	R		80		1.90309	
2-JMS087.01	08/23/2005 15:15	S	0.3	R		76		1.880814	
2-JMS087.01	09/20/2005 14:40	S	0.3	R		96		1.982271	
2-JMS087.01	10/18/2005 15:00	S	0.3	R		56		1.748188	
2-JMS087.01	11/15/2005 14:05	S	0.3	R		72		1.857332	
2-JMS087.01	12/21/2005 14:40	S	0.3	R		47		1.672098	
2-JMS087.01	01/17/2006 14:30	S	0.3	R		55		1.740363	
2-JMS087.01	02/21/2006 14:45	S	0.3	R		54		1.732394	
2-JMS087.01	03/20/2006 15:00	S	0.3	R		73		1.863323	
2-JMS087.01	04/26/2006 14:35	S	0.3	R		62		1.792392	
2-JMS087.01	05/15/2006 14:45	S	0.3	R		60		1.778151	
2-JMS087.01	07/24/2006 14:10	S	0.3	R		74		1.869232	
2-JMS087.01	08/22/2006 14:50	S	0.3	R		88		1.944483	
2-JMS087.01	09/26/2006 14:40	S	0.3	R		56		1.748188	
2-JMS087.01	10/30/2006 14:50	S	0.3	R		62		1.792392	
2-JMS087.01	11/15/2006 14:00	S	0.3	R		38		1.579784	
2-JMS087.01	01/24/2007 14:20	S	0.3	R		60		1.778151	
Average						66.7		1.801521	63.3

Attachment 5 - Site Visit Memo

MEMORANDUM
DEPARTMENT OF ENVIRONMENTAL QUALITY
Piedmont Regional Office

4949-A Cox Road, Glen Allen, Virginia 23060-6295
804/527-5020

TO: File
FROM: Jaime Bauer
DATE: April 13, 2009
SUBJECT: VA0026557 – Phillip Morris USA – Park 500 Site Visit
COPIES: Meredith Williams, Compliance Inspector

On Tuesday, March 31, 2009, a site visit was made by the following staff to the Phillip Morris USA – Park 500 Plant at 4100 Bermuda Hundred Road, Chester, Virginia:

Jaime Bauer – VPDES Permit Writer
Ray Jenkins – VPDES Permit Writer
Jeremy Kazio – VPDES Permit Writer
Jason Ericson – VWP Staff

We met with company representatives Mark Davis (Altria), Tony Nobinger (Phillip Morris), Pat Puglisi (Altria), and Chandra Patel (Phillip Morris). The purpose of the site visit was to become familiar with the wastewater treatment plant, confirm the application information, and observe the constructed wetland, or Natural Treatment System.

Initial scan of the facility revealed that it appeared well operated and maintained. The treatment system consists of bar racks, screens, (2) equalization basins, (5) primary clarifiers, (5) activated sludge aeration basins, coagulation (addition of ferric chloride), (6) secondary clarifiers, sand filtering, and chlorine contact tank with dechlorination. Sludge is either dewatered by belt presses or sent to the thickeners. Eventually, the sludge solids are land applied at permitted facilities by a third party contractor. Operations of the treatment system are continually monitored and nearly fully adjustable via a network of computers located in a main operations room adjacent to the laboratory, as well several stations located in the sand filter and chlorination buildings.

During the site visit, only 3 of the primary clarifiers, 3 of the activated sludge basins, and 4 of the secondary clarifiers were in operation. In the last 5-6 years, the permittee experimented with nutrient reduction techniques within the treatment system. It was discovered that they were able to achieve further nutrient reduction by staggering the on/off aeration schedule of the activated sludge basins. In addition, the westernmost activated sludge basin has been taken offline for an indefinite period of time in the interest of cost savings. However, it is currently operational and may be used in the future during periods of high influent flow to the treatment plant. Final effluent appeared non-turbid and odorless, with a slight brown tint, as is customary for tobacco wastewater. After treatment, the treated wastewater is routed to the Natural Treatment System (NTS) where additional polishing takes place. Construction of the NTS was completed in summer 2008. The compliance point for all parameters is located between dechlorination and the NTS. Treated wastewater enters the NTS on its northern side (closest to the James River) and flows south toward the Philip Morris facility. The NTS consists of two completely separate cells, each broken into three sequenced tiers. These tiers utilize the unique treatment capabilities of different species of hydrophilic vegetation in a complimentary manner in order to maximize the NTS's quality of treatment. The cells include shallow and deep zones which allow for maximum flow velocity reduction in order to enhance retention time and prevent short circuiting the NTS's treatment capabilities. Retention time in the NTS is believed to be approximately 20 to 30 days. Multiple plant species were planted during 2008 and were well established and appeared to be flourishing during the site visit. Various species of birds and additional evidences of other wildlife were also observed throughout the NTS.

During the site visit, Phillip Morris and Altria staff discussed in more detail an application request for a pilot study to use the NTS as natural dechlorination system rather than using chemicals for dechlorination. This would require moving the compliance point for Total Residual Chlorine to a location after the NTS. DEQ staff expressed interest in the study and agreed to take the request into consideration.

Attachment 6 - 208-Richmond-Crater Water Quality Management Plan

Richmond Crater Interim Water Quality Management Plan Wasteload Allocations

TABLE B7- WASTE LOAD ALLOCATION FOR THE YEAR 2000

	SUMMER (June-October)						WINTER (November-May)				
	FLOW (mgd)	CBOD5		NH3-N1,3		DO2 (mg/l)	CBOD5		NH3-N1		DO2 (mg/l)
		(lbs/d)	(mg/l)	(lbs/d)	(mg/l)		(lbs/d)	(mg/l)	(lbs/d)	(mg/l)	
City of Richmond STP	45.08	3002	8.0	2403	6.4	5.6	5367	14.3		15.2	5.6
E.I. DuPont-Spruance	196.99	948		590		4.4	948		756		2.9
Falling Creek STP	10.10	1348	16.0	539	6.4	5.9	2023	24.0	1281	15.2	5.9
Proctor's Creek STP	16.80	1602	11.4	961	6.9	5.9	2403	17.1	1402	10.0	5.9
Reynolds Metals Co.	0.78	172		13		6.5	172		13		6.5
Henrico STP	32.80	3002	11.0	2403	8.8	5.6	4756	17.4	3504	12.8	5.6
American Tobacco Co.	3.00	715		113		5.8	715		113		5.8
ICI Americas, Inc.	0.20	167		8		5.8	167		8		3.1
Phillip Morris- Park 500	2.90	819		92		4.6	819		92		4.6
Allied (Chesterfield)	56.00	1255		442		5.7	1255		442		5.7
Allied (Hopewell)	170.00	2750		10326		6.1	2750		10326		6.1
Hopewell Regional WTF	36.78	12502	40.7	12091	33.5	4.8	12502	40.7	10291	33.5	4.8
Petersburg STP	15.00	2802	22.4	801	6.4	5.0	2802	22.4	2028	16.2	5.0
TOTAL	406.43	31084		28982			36679		35963		

1 NH3-N values represent ammonia as nitrogen.

2 Dissolved oxygen limits represent average minimum allowable levels.

3 Allied (Hopewell) allocation may be redistributed to the Hopewell Regional WTF by VPDES permit.

TABLE B7- WASTE LOAD ALLOCATIONS FOR THE YEAR 2010

	SUMMER (June-October)						WINTER (November-May)				
	FLOW (mgd)	CBOD5		NH3-N1,3		DO2 (mg/l)	CBOD5		NH3-N1		DO2 (mg/l)
		(lbs/d)	(mg/l)	(lbs/d)	(mg/l)		(lbs/d)	(mg/l)	(lbs/d)	(mg/l)	
City of Richmond STP	45.86	3002	7.8	2403	6.3	5.6	5367	14.0		14.9	5.6
E.I. DuPont-Spruance	16.99	948		590		4.4	948		756		2.9
Falling Creek STP	10.10	1348	16.0	539	6.4	5.9	2023	24.0	1281	15.2	5.9
Proctor s Creek STP	24.00	1602	8.0	961	4.8	5.9	2403	12.0	1402	7.0	5.9
Reynolds Metals Co.	0.78	172		13		6.5	172		13		6.5
Henrico STP	38.07	3002	9.5	2403	7.6	5.6	4756	15.0	3504	11.0	5.6
American Tobacco Co.	3.00	715		113		5.8	715		113		5.8
ICI Americas, Inc.	0.20	167		8		5.8	167		8		3.1
Phillip Morris- Park 500	2.90	819		92		4.6	819		92		4.6
Allied (Chesterfield)	56.00	1255		442		5.7	1255		442		5.7
Allied (Hopewell)	180.00	2750		10326		6.1	2750		10326		6.1
Hopewell Regional WTF	39.61	12502	37.8	10291	31.1	4.8	12502	37.8	10291	31.1	4.8
Petersburg STP	15.00	2802	22.4	801	6.4	5.0	2802	22.4	2028	16.2	5.0
TOTAL	432.1	31084		28982			36679		35963		

1 NH3-N values represent ammonia as nitrogen.

2 Dissolved oxygen limits represent average minimum allowable levels.

3 Allied (Hopewell) allocation may be redistributed to the Hopewell Regional WTF by VPDES permit.

Attachment 7 - Dilution Determination Memo – 11/18/92 and
Justification for Permit Limitations Memo – 12/18/81

MEMORANDUM

Virginia Water Control Board
Office of Water Resources Management
4900 Cox Road P.O. Box 11143 Richmond, Va.

Subject: Philip Morris - Park 500 outfall
To: Chip Ray, PRO
From: M. Dale Phillips
Date: November 18, 1992
Copies: FTH

I have finally obtained guidance from OERS and have had a chance to look at this discharge. I cannot perform a complete analysis due to the design of the diffuser. There are simply no models available to predict the mixing resulting from this type diffusor and I do not believe it is feasible for me to attempt a major development for this one discharge. I can however make some conservative estimates that should allow us to write reasonable permit limits. If this is not acceptable to the company, I would suggest that a dye study(s) be performed to define the mixing properties of this diffusor.

If the diffusor is treated as a single port directed straight up then models are available to estimate the mixing process. This will be very conservative because the diffusor plate makes the actual design act like a multiport diffusor with an infinite number of ports that discharge over a relatively wide range of angles. Such a diffusor can be expected to have a higher efficiency then a single port. The problem is I can't determine just how much.

I have used the Virginia Mixing Program prepared by HydroQual and Cormix-1 and applied them to a single port diffusor discharging vertically. The results are 8.6 and 14.0 respectively. Based on these results and based on the fact that the diffusor plate on the actual discharge will enhance mixing I believe that the actual mixing is greater than that calculated. I would recommend that a value of 14:1 be used for this application.

PHILIP MORRIS

U.S.A.

P.O. BOX 26603, RICHMOND, VIRGINIA 23261 TELEPHONE (804) 274-2000

October 28, 1992

Mr. A. C. Ray
State Water Control Broad
4900 Cox Road
Glen Allen, Virginia

Subject: Philip Morris Diffuser Information
Philip Morris U.S.A. - Park 500 Plant
VPDES Permit No. VA0026557

Dear Mr. Ray:

The following information on the Philip Morris - Park 500 outfall diffuser is being provided in response to your request. It is our understanding the VWCB is going to use this information to perform diffuser modeling to assess the extent of additional dilution that can be used in the development of Philip Morris' effluent limits. It is also our understanding that Philip Morris has the option to conduct additional studies, if deemed necessary, after receipt of the state's modeling result.

Configuration

The Philip Morris - Park 500 outfall pipe consists of a 14-inch steel pipe with a 90 degree turn on the end, such that the discharge from the pipe is in a vertically upward direction. However, a diffuser plate located approximately 6-inches above the outlet from the discharge pipe, forces the flow to be turned horizontally and discharged radially. The diffuser is located approximately 30 feet from the bank under mean low water elevation (MLW). A copy of a drawing of the diffuser is attached to this memo.

Exit Velocity

The exit velocity from the 14-inch pipe at a design flow of 2.6 MGD is 3.7 ft/sec.

Subject: Philip Morris Diffuser Information
Philip Morris U.S.A. - Park 500 Plant
VPDES Permit No. VA0026557

River Velocity

The average river velocity in the vicinity of the Philip Morris - Park 500 outfall, under 1Q10 low flow and with the river elevation at the MLW, is approximately 0.06 ft/sec.

Depth of River

The average depth of the river in the main channel in the vicinity of the Philip Morris - Park 500 outfall is approximately 25 feet. However, the diffuser itself is not located in the deep portion of the main channel but rather on the slope of the channel bank. The water depth at the diffuser under MLW elevation is approximately 7 feet, however, water depth increases sharply on the river side of the diffuser.

Width of River

The approximate width of the river in the vicinity of the outfall is 530 feet.

If you have any further question, please do not hesitate to call me 804-274-2069.

Sincerely yours,

Ethel Tatum

Ethel G. Tatum
Senior Environmental Engineer

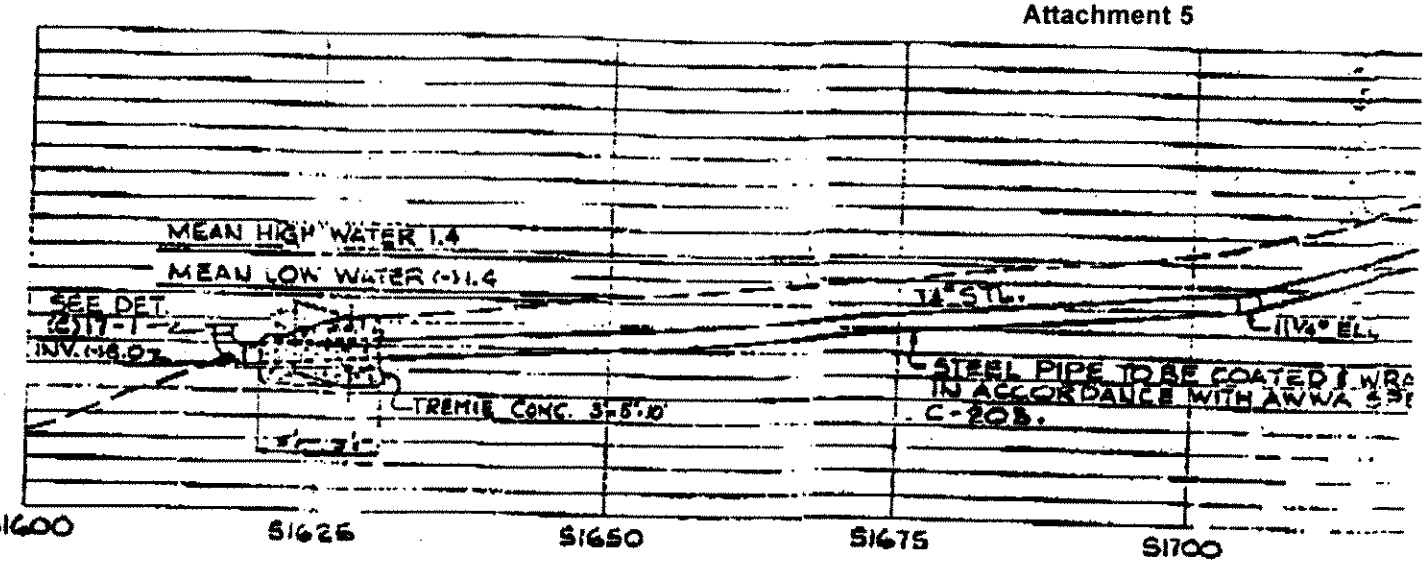

PROFILE OF EFFLUENT DISCHARGE

0 10' 20' 30' 40' 50'

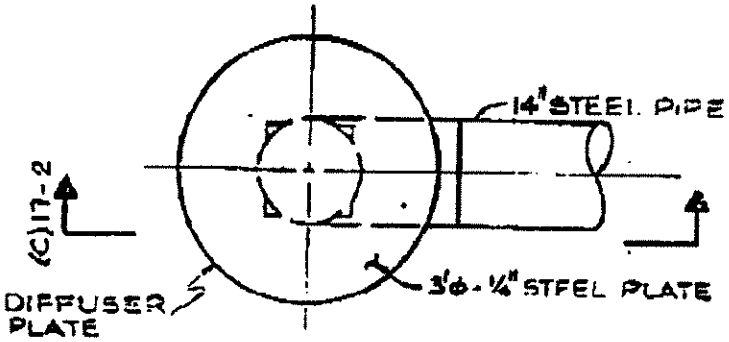

PLAN

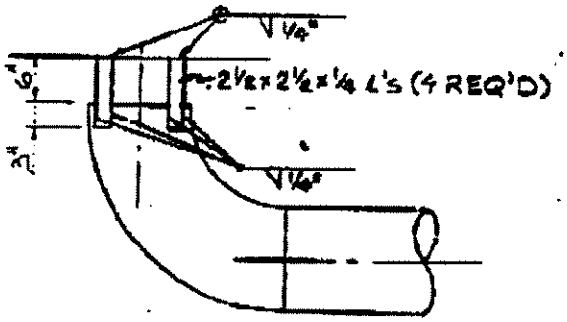

SECTION (C)17-2

DETAIL (C)17-1

0 1 2 3 4

MEMORANDUM

State Water Control Board

2111 North Hamilton Street P. O. Box 11143 Richmond, VA. 23230

SUBJECT: Park 500 Division of Philip Morris Inc., Justification for Permit Limitations

TO: File

FROM: Ray Jenkins *Ray Jenkins*

DATE: December 18, 1981

COPIES:

Park 500 is adding a third process line to two existing lines. The wastewater treatment facilities are being enlarged by 50% at the same treatment efficiency to accommodate this expansion. The BOD_5 and TSS limitations shown in Table I of the Fact Sheet therefore, represent a 50% increase over the existing permit limitations (e.g., 400 #/d BOD_5 + 400(0.5) = 600 #/d). The maximum BOD_5 and TSS limitations have also increased by 50%. The proposed BOD_5 limitation of 600 #/d is less than the allocation currently included in the 208 modeling work being done by the Agency. These limitations are included in the proposed permit as "Future Limitations" that will become effective when the expanded wastewater treatment facilities are put on line.

It is proposed that the color limitation be deleted from the permit. It is anticipated that the color level of the discharge will increase to approximately 600 APHA color units without treatment specific to color removal. This is considered to be an insignificant increase in the color level of the discharge and should not have a measurable impact on the receiving stream. Philip Morris requested an increase in the color from 400 APHA to 600 APHA color units because it will result in reduced polymer usage to meet the color limitation. The staff had no objections to this increase and as already mentioned, subsequently decided to delete the color limitation altogether. (It is also proposed to delete color from the current limitations.)

The pH and chlorine residual limitations are the same as in the current permit.

Monitoring requirements for TKN and ammonia are proposed because of the significance of these parameters to the wasteload allocation modeling for the area.

The requirement for Philip Morris to biomonitor their discharge is included in accordance with the Board's "3(c)" and Non-Toxic Effluent Criteria (NTEC) programs.

The Special Condition regarding triplicate laboratory analysis is included at the request of Philip Morris (reference the Company's letter dated December 18, 1980 from J. N. Tenhet to Ray Jenkins). Although the staff has agreed with this procedure, we have been reluctant to put it into the permit because if triplicates were then not run for some reason (for example, one of the sample bottles gets broken), this would be a permit violation requiring our attention. The proposed wording of the Special Condition avoids this problem and gives Philip Morris the documentation they want regarding our acceptance of the procedure.

This is not a primary industry; the permit is therefore, being reissued for a 5 year term. It is also noted that acute and "chronic" (28-day) bioassays have been done on the treatment plant effluent which showed the effluent to be non-toxic in those tests. The permit however, is being reissued with a reopener clause for BCT and BAT limitations.

jlh

Attachment 8 - Effluent Limitation Development:
MSTRANTI Source Table
MSTRANTI.xls
STATS.exe Analyses

MSTRANTI DATA SOURCE REPORT

VA0026557 –Phillip Morris USA – Park 500

Stream Information:	
Mean Hardness	STORET Data provided by planning staff for monitoring station 2-JMS087.01
90% Temperature	
90% Maximum pH	
10% Maximum pH	
Tier Designation	As advised by planning unit. See Flow Frequency Memo dated March 4, 2009 (Attachment 1).
Stream Flows:	
All Data	As advised by planning unit. See Flow Frequency Memo dated March 4, 2009 (Attachment 1).
Mixing Information:	
Flow Analysis	Acute (1Q10): November 18, 1992 memo (Attachment 7) All others: Tidal Defaults as recommended in GM00-2011.
Effluent Information:	
Mean Hardness	DMR Data (Attachment 9)
90% Temperature	Summer Temperature reported on Form 2c
90% Maximum pH	DMR Data (Attachment 9)
10% Maximum pH	
Discharge Flow	1 MGD* based on tidal defaults. See Fact Sheet Item 16 for further explanation.

FRESHWATER
WATER QUALITY CRITERIA / WASTELOAD ALLOCATION ANALYSIS

Facility Name: Phillip Morris USA - Park 500 Permit No.: VA0026557

Receiving Stream: James River Version: OWP Guidance Memo 00-2011 (8/24/00)

Stream Information

Mean Hardness (as CaCO3) =	63.3	mg/L
90% Temperature (Annual) =	30.6	deg C
90% Temperature (Wet season) =		deg C
90% Maximum pH =	8	SU
10% Maximum pH =	7.1	SU
Tier Designation (1 or 2) =	1	
Public Water Supply (PWS) Y/N? =	Y	
Trout Present Y/N? =	N	
Early Life Stages Present Y/N? =	Y	

Stream Flows

1Q10 (Annual) =	13	MGD
7Q10 (Annual) =	49	MGD
30Q10 (Annual) =	49	MGD
1Q10 (Wet season) =		MGD
30Q10 (Wet season) =		MGD
30Q5 =	49	MGD
Harmonic Mean =	49	MGD
Annual Average =	N/A	MGD

Mixing Information

Annual - 1Q10 Mix =	100	%
- 7Q10 Mix =	100	%
- 30Q10 Mix =	100	%
Wet Season - 1Q10 Mix =		%
- 30Q10 Mix =		%

Effluent Information

Mean Hardness (as CaCO3) =	324	mg/L
90% Temp (Annual) =	25.4	deg C
90% Temp (Wet season) =		deg C
90% Maximum pH =	8	SU
10% Maximum pH =	8	SU
Discharge Flow =	1	MGD

Parameter	Background	Water Quality Criteria				Wasteload Allocations				Antidegradation Baseline				Antidegradation Allocations				**Most Limiting Allocations**			
(ug/l unless noted)	Conc.	Acute	Chronic	HH (PWS)	HH	Acute	Chronic	HH (PWS)	HH	Acute	Chronic	HH (PWS)	HH	Acute	Chronic	HH (PWS)	HH	**Acute**	**Chronic**	**HH (PWS)**	**HH**
Acenapthene	0	--	--	1.2E+03	2.7E+03	--	--	6.0E+04	1.4E+05	--	--	--	--	--	--	--	--	--	--	**6.0E+04**	**1.4E+05**
Acrolein	0	--	--	3.2E+02	7.8E+02	--	--	1.6E+04	3.9E+04	--	--	--	--	--	--	--	--	--	--	**1.6E+04**	**3.9E+04**
Acrylonitrile[c]	0	--	--	5.9E-01	6.6E+00	--	--	3.0E+01	3.3E+02	--	--	--	--	--	--	--	--	--	--	**3.0E+01**	**3.3E+02**
Aldrin [c]	0	3.0E+00	--	1.3E-03	1.4E-03	4.2E+01	--	6.5E-02	7.0E-02	--	--	--	--	--	--	--	--	**4.2E+01**	--	**6.5E-02**	**7.0E-02**
Ammonia-N (mg/l) (Yearly)	0	8.41E+00	8.69E-01	--	--	1.2E+02	4.3E+01	--	--	--	--	--	--	--	--	--	--	**1.2E+02**	**4.3E+01**	--	--
Ammonia-N (mg/l) (High Flow)	0	8.41E+00	2.43E+00	--	--	8.4E+00	2.4E+00	--	--	--	--	--	--	--	--	--	--	**8.4E+00**	**2.4E+00**	--	--
Anthracene	0	--	--	9.6E+03	1.1E+05	--	--	4.8E+05	5.5E+06	--	--	--	--	--	--	--	--	--	--	**4.8E+05**	**5.5E+06**
Antimony	0	--	--	1.4E+01	4.3E+03	--	--	7.0E+02	2.2E+05	--	--	--	--	--	--	--	--	--	--	**7.0E+02**	**2.2E+05**
Arsenic	0	3.4E+02	1.5E+02	1.0E+01	--	4.8E+03	7.5E+03	5.0E+02	--	--	--	--	--	--	--	--	--	**4.8E+03**	**7.5E+03**	**5.0E+02**	--
Barium	0	--	--	2.0E+03	--	--	--	1.0E+05	--	--	--	--	--	--	--	--	--	--	--	**1.0E+05**	--
Benzene [c]	0	--	--	1.2E+01	7.1E+02	--	--	6.0E+02	3.6E+04	--	--	--	--	--	--	--	--	--	--	**6.0E+02**	**3.6E+04**
Benzidine[c]	0	--	--	1.2E-03	5.4E-03	--	--	6.0E-02	2.7E-01	--	--	--	--	--	--	--	--	--	--	**6.0E-02**	**2.7E-01**
Benzo (a) anthracene [c]	0	--	--	4.4E-02	4.9E-01	--	--	2.2E+00	2.5E+01	--	--	--	--	--	--	--	--	--	--	**2.2E+00**	**2.5E+01**
Benzo (b) fluoranthene [c]	0	--	--	4.4E-02	4.9E-01	--	--	2.2E+00	2.5E+01	--	--	--	--	--	--	--	--	--	--	**2.2E+00**	**2.5E+01**
Benzo (k) fluoranthene [c]	0	--	--	4.4E-02	4.9E-01	--	--	2.2E+00	2.5E+01	--	--	--	--	--	--	--	--	--	--	**2.2E+00**	**2.5E+01**
Benzo (a) pyrene [c]	0	--	--	4.4E-02	4.9E-01	--	--	2.2E+00	2.5E+01	--	--	--	--	--	--	--	--	--	--	**2.2E+00**	**2.5E+01**
Bis2-Chloroethyl Ether	0	--	--	3.1E-01	1.4E+01	--	--	1.6E+01	7.0E+02	--	--	--	--	--	--	--	--	--	--	**1.6E+01**	**7.0E+02**
Bis2-Chloroisopropyl Ether	0	--	--	1.4E+03	1.7E+05	--	--	7.0E+04	8.5E+06	--	--	--	--	--	--	--	--	--	--	**7.0E+04**	**8.5E+06**
Bromoform [c]	0	--	--	4.4E+01	3.6E+03	--	--	2.2E+03	1.8E+05	--	--	--	--	--	--	--	--	--	--	**2.2E+03**	**1.8E+05**
Butylbenzylphthalate	0	--	--	3.0E+03	5.2E+03	--	--	1.5E+05	2.6E+05	--	--	--	--	--	--	--	--	--	--	**1.5E+05**	**2.6E+05**
Cadmium	0	3.1E+00	8.4E-01	5.0E+00	--	4.4E+01	4.2E+01	2.5E+02	--	--	--	--	--	--	--	--	--	**4.4E+01**	**4.2E+01**	**2.5E+02**	--
Carbon Tetrachloride [c]	0	--	--	2.5E+00	4.4E+01	--	--	1.3E+02	2.2E+03	--	--	--	--	--	--	--	--	--	--	**1.3E+02**	**2.2E+03**
Chlordane [c]	0	2.4E+00	4.3E-03	2.1E-02	2.2E-02	3.4E+01	2.2E-01	1.1E+00	1.1E+00	--	--	--	--	--	--	--	--	**3.4E+01**	**2.2E-01**	**1.1E+00**	**1.1E+00**
Chloride	0	8.6E+05	2.3E+05	2.5E+05	--	1.2E+07	1.2E+07	1.3E+07	--	--	--	--	--	--	--	--	--	**1.2E+07**	**1.2E+07**	**1.3E+07**	--
TRC	0	1.9E+01	1.1E+01	--	--	2.7E+02	5.5E+02	--	--	--	--	--	--	--	--	--	--	**2.7E+02**	**5.5E+02**	--	--
Chlorobenzene	0	--	--	6.8E+02	2.1E+04	--	--	3.4E+04	1.1E+06	--	--	--	--	--	--	--	--	--	--	**3.4E+04**	**1.1E+06**

Parameter	Background	Water Quality Criteria				Wasteload Allocations				Antidegradation Baseline				Antidegradation Allocations				**Most Limiting Allocations**			
(ug/l unless noted)	Conc.	Acute	Chronic	HH (PWS)	HH	Acute	Chronic	HH (PWS)	HH	Acute	Chronic	HH (PWS)	HH	Acute	Chronic	HH (PWS)	HH	**Acute**	**Chronic**	**HH (PWS)**	**HH**
Chlorodibromomethane[c]	0	--	--	4.1E+00	3.4E+02	--	--	2.1E+02	1.7E+04	--	--	--	--	--	--	--	--	**--**	**--**	**2.1E+02**	**1.7E+04**
Chloroform [c]	0	--	--	3.5E+02	2.9E+04	--	--	1.8E+04	1.5E+06	--	--	--	--	--	--	--	--	**--**	**--**	**1.8E+04**	**1.5E+06**
2-Chloronaphthalene	0	--	--	1.7E+03	4.3E+03	--	--	8.5E+04	2.2E+05	--	--	--	--	--	--	--	--	**--**	**--**	**8.5E+04**	**2.2E+05**
2-Chlorophenol	0	--	--	1.2E+02	4.0E+02	--	--	6.0E+03	2.0E+04	--	--	--	--	--	--	--	--	**--**	**--**	**6.0E+03**	**2.0E+04**
Chlorpyrifos	0	8.3E-02	4.1E-02	--	--	1.2E+00	2.1E+00	--	--	--	--	--	--	--	--	--	--	**1.2E+00**	**2.1E+00**	**--**	**--**
Chromium III	0	4.8E+02	5.4E+01	--	--	6.8E+03	2.7E+03	--	--	--	--	--	--	--	--	--	--	**6.8E+03**	**2.7E+03**	**--**	**--**
Chromium VI	0	1.6E+01	1.1E+01	--	--	2.2E+02	5.5E+02	--	--	--	--	--	--	--	--	--	--	**2.2E+02**	**5.5E+02**	**--**	**--**
Chromium, Total	0	--	--	1.0E+02	--	--	--	5.0E+03	--	--	--	--	--	--	--	--	--	**--**	**--**	**5.0E+03**	**--**
Chrysene [c]	0	--	--	4.4E-02	4.9E-01	--	--	2.2E+00	2.5E+01	--	--	--	--	--	--	--	--	**--**	**--**	**2.2E+00**	**2.5E+01**
Copper	0	1.1E+01	6.5E+00	1.3E+03	--	1.6E+02	3.2E+02	6.5E+04	--	--	--	--	--	--	--	--	--	**1.6E+02**	**3.2E+02**	**6.5E+04**	**--**
Cyanide	0	2.2E+01	5.2E+00	7.0E+02	2.2E+05	3.1E+02	2.6E+02	3.5E+04	1.1E+07	--	--	--	--	--	--	--	--	**3.1E+02**	**2.6E+02**	**3.5E+04**	**1.1E+07**
DDD [c]	0	--	--	8.3E-03	8.4E-03	--	--	4.2E-01	4.2E-01	--	--	--	--	--	--	--	--	**--**	**--**	**4.2E-01**	**4.2E-01**
DDE [c]	0	--	--	5.9E-03	5.9E-03	--	--	3.0E-01	3.0E-01	--	--	--	--	--	--	--	--	**--**	**--**	**3.0E-01**	**3.0E-01**
DDT [c]	0	1.1E+00	1.0E-03	5.9E-03	5.9E-03	1.5E+01	5.0E-02	3.0E-01	3.0E-01	--	--	--	--	--	--	--	--	**1.5E+01**	**5.0E-02**	**3.0E-01**	**3.0E-01**
Demeton	0	--	1.0E-01	--	--	--	5.0E+00	--	--	--	--	--	--	--	--	--	--	**--**	**5.0E+00**	**--**	**--**
Dibenz(a,h)anthracene [c]	0	--	--	4.4E-02	4.9E-01	--	--	2.2E+00	2.5E+01	--	--	--	--	--	--	--	--	**--**	**--**	**2.2E+00**	**2.5E+01**
Dibutyl phthalate	0	--	--	2.7E+03	1.2E+04	--	--	1.4E+05	6.0E+05	--	--	--	--	--	--	--	--	**--**	**--**	**1.4E+05**	**6.0E+05**
Dichloromethane (Methylene Chloride) [c]	0	--	--	4.7E+01	1.6E+04	--	--	2.4E+03	8.0E+05	--	--	--	--	--	--	--	--	**--**	**--**	**2.4E+03**	**8.0E+05**
1,2-Dichlorobenzene	0	--	--	2.7E+03	1.7E+04	--	--	1.4E+05	8.5E+05	--	--	--	--	--	--	--	--	**--**	**--**	**1.4E+05**	**8.5E+05**
1,3-Dichlorobenzene	0	--	--	4.0E+02	2.6E+03	--	--	2.0E+04	1.3E+05	--	--	--	--	--	--	--	--	**--**	**--**	**2.0E+04**	**1.3E+05**
1,4-Dichlorobenzene	0	--	--	4.0E+02	2.6E+03	--	--	2.0E+04	1.3E+05	--	--	--	--	--	--	--	--	**--**	**--**	**2.0E+04**	**1.3E+05**
3,3-Dichlorobenzidine[c]	0	--	--	4.0E-01	7.7E-01	--	--	2.0E+01	3.9E+01	--	--	--	--	--	--	--	--	**--**	**--**	**2.0E+01**	**3.9E+01**
Dichlorobromomethane [c]	0	--	--	5.6E+00	4.6E+02	--	--	2.8E+02	2.3E+04	--	--	--	--	--	--	--	--	**--**	**--**	**2.8E+02**	**2.3E+04**
1,2-Dichloroethane [c]	0	--	--	3.8E+00	9.9E+02	--	--	1.9E+02	5.0E+04	--	--	--	--	--	--	--	--	**--**	**--**	**1.9E+02**	**5.0E+04**
1,1-Dichloroethylene	0	--	--	3.1E+02	1.7E+04	--	--	1.6E+04	8.5E+05	--	--	--	--	--	--	--	--	**--**	**--**	**1.6E+04**	**8.5E+05**
1,2-trans-dichloroethylene	0	--	--	7.0E+02	1.4E+05	--	--	3.5E+04	7.0E+06	--	--	--	--	--	--	--	--	**--**	**--**	**3.5E+04**	**7.0E+06**
2,4-Dichlorophenol	0	--	--	9.3E+01	7.9E+02	--	--	4.7E+03	4.0E+04	--	--	--	--	--	--	--	--	**--**	**--**	**4.7E+03**	**4.0E+04**
2,4-Dichlorophenoxy acetic acid (2,4-D)	0	--	--	1.0E+02	--	--	--	5.0E+03	--	--	--	--	--	--	--	--	--	**--**	**--**	**5.0E+03**	**--**
1,2-Dichloropropane[c]	0	--	--	5.2E+00	3.9E+02	--	--	2.6E+02	2.0E+04	--	--	--	--	--	--	--	--	**--**	**--**	**2.6E+02**	**2.0E+04**
1,3-Dichloropropene	0	--	--	1.0E+01	1.7E+03	--	--	5.0E+02	8.5E+04	--	--	--	--	--	--	--	--	**--**	**--**	**5.0E+02**	**8.5E+04**
Dieldrin [c]	0	2.4E-01	5.6E-02	1.4E-03	1.4E-03	3.4E+00	2.8E+00	7.0E-02	7.0E-02	--	--	--	--	--	--	--	--	**3.4E+00**	**2.8E+00**	**7.0E-02**	**7.0E-02**
Diethyl Phthalate	0	--	--	2.3E+04	1.2E+05	--	--	1.2E+06	6.0E+06	--	--	--	--	--	--	--	--	**--**	**--**	**1.2E+06**	**6.0E+06**
Di-2-Ethylhexyl Phthalate [c]	0	--	--	1.8E+01	5.9E+01	--	--	9.0E+02	3.0E+03	--	--	--	--	--	--	--	--	**--**	**--**	**9.0E+02**	**3.0E+03**
2,4-Dimethylphenol	0	--	--	5.4E+02	2.3E+03	--	--	2.7E+04	1.2E+05	--	--	--	--	--	--	--	--	**--**	**--**	**2.7E+04**	**1.2E+05**
Dimethyl Phthalate	0	--	--	3.1E+05	2.9E+06	--	--	1.6E+07	1.5E+08	--	--	--	--	--	--	--	--	**--**	**--**	**1.6E+07**	**1.5E+08**
Di-n-Butyl Phthalate	0	--	--	2.7E+03	1.2E+04	--	--	1.4E+05	6.0E+05	--	--	--	--	--	--	--	--	**--**	**--**	**1.4E+05**	**6.0E+05**
2,4 Dinitrophenol	0	--	--	7.0E+01	1.4E+04	--	--	3.5E+03	7.0E+05	--	--	--	--	--	--	--	--	**--**	**--**	**3.5E+03**	**7.0E+05**
2-Methyl-4,6-Dinitrophenol	0	--	--	1.3E+01	7.65E+02	--	--	6.7E+02	3.8E+04	--	--	--	--	--	--	--	--	**--**	**--**	**6.7E+02**	**3.8E+04**
2,4-Dinitrotoluene [c]	0	--	--	1.1E+00	9.1E+01	--	--	5.5E+01	4.6E+03	--	--	--	--	--	--	--	--	**--**	**--**	**5.5E+01**	**4.6E+03**
Dioxin (2,3,7,8-tetrachlorodibenzo-p-dioxin) (ppq)	0	--	--	1.2E-06	1.2E-06	--	--	1.2E-06	1.2E-06	--	--	--	--	--	--	--	--	**--**	**--**	**1.2E-06**	**1.2E-06**
1,2-Diphenylhydrazine[c]	0	--	--	4.0E-01	5.4E+00	--	--	2.0E+01	2.7E+02	--	--	--	--	--	--	--	--	**--**	**--**	**2.0E+01**	**2.7E+02**
Alpha-Endosulfan	0	2.2E-01	5.6E-02	1.1E+02	2.4E+02	3.1E+00	2.8E+00	5.5E+03	1.2E+04	--	--	--	--	--	--	--	--	**3.1E+00**	**2.8E+00**	**5.5E+03**	**1.2E+04**
Beta-Endosulfan	0	2.2E-01	5.6E-02	1.1E+02	2.4E+02	3.1E+00	2.8E+00	5.5E+03	1.2E+04	--	--	--	--	--	--	--	--	**3.1E+00**	**2.8E+00**	**5.5E+03**	**1.2E+04**
Endosulfan Sulfate	0	--	--	1.1E+02	2.4E+02	--	--	5.5E+03	1.2E+04	--	--	--	--	--	--	--	--	**--**	**--**	**5.5E+03**	**1.2E+04**
Endrin	0	8.6E-02	3.6E-02	7.6E-01	8.1E-01	1.2E+00	1.8E+00	3.8E+01	4.1E+01	--	--	--	--	--	--	--	--	**1.2E+00**	**1.8E+00**	**3.8E+01**	**4.1E+01**
Endrin Aldehyde	0	--	--	7.6E-01	8.1E-01	--	--	3.8E+01	4.1E+01	--	--	--	--	--	--	--	--	**--**	**--**	**3.8E+01**	**4.1E+01**

Parameter	Background	Water Quality Criteria				Wasteload Allocations				Antidegradation Baseline				Antidegradation Allocations				**Most Limiting Allocations**			
(ug/l unless noted)	Conc.	Acute	Chronic	HH (PWS)	HH	Acute	Chronic	HH (PWS)	HH	Acute	Chronic	HH (PWS)	HH	Acute	Chronic	HH (PWS)	HH	**Acute**	**Chronic**	**HH (PWS)**	**HH**
Ethylbenzene	0	--	--	3.1E+03	2.9E+04	--	--	1.6E+05	1.5E+06	--	--	--	--	--	--	--	--	**--**	**--**	**1.6E+05**	**1.5E+06**
Fluoranthene	0	--	--	3.0E+02	3.7E+02	--	--	1.5E+04	1.9E+04	--	--	--	--	--	--	--	--	**--**	**--**	**1.5E+04**	**1.9E+04**
Fluorene	0	--	--	1.3E+03	1.4E+04	--	--	6.5E+04	7.0E+05	--	--	--	--	--	--	--	--	**--**	**--**	**6.5E+04**	**7.0E+05**
Foaming Agents	0	--	--	5.0E+02	--	--	--	2.5E+04	--	--	--	--	--	--	--	--	--	**--**	**--**	**2.5E+04**	**--**
Guthion	0	--	1.0E-02	--	--	--	5.0E-01	--	--	--	--	--	--	--	--	--	--	**--**	**5.0E-01**	**--**	**--**
Heptachlor [C]	0	5.2E-01	3.8E-03	2.1E-03	2.1E-03	7.3E+00	1.9E-01	1.1E-01	1.1E-01	--	--	--	--	--	--	--	--	**7.3E+00**	**1.9E-01**	**1.1E-01**	**1.1E-01**
Heptachlor Epoxide[C]	0	5.2E-01	3.8E-03	1.0E-03	1.1E-03	7.3E+00	1.9E-01	5.0E-02	5.5E-02	--	--	--	--	--	--	--	--	**7.3E+00**	**1.9E-01**	**5.0E-02**	**5.5E-02**
Hexachlorobenzene[C]	0	--	--	7.5E-03	7.7E-03	--	--	3.8E-01	3.9E-01	--	--	--	--	--	--	--	--	**--**	**--**	**3.8E-01**	**3.9E-01**
Hexachlorobutadiene[C]	0	--	--	4.4E+00	5.0E+02	--	--	2.2E+02	2.5E+04	--	--	--	--	--	--	--	--	**--**	**--**	**2.2E+02**	**2.5E+04**
Hexachlorocyclohexane Alpha-BHC[C]	0	--	--	3.9E-02	1.3E-01	--	--	2.0E+00	6.5E+00	--	--	--	--	--	--	--	--	**--**	**--**	**2.0E+00**	**6.5E+00**
Hexachlorocyclohexane Beta-BHC[C]	0	--	--	1.4E-01	4.6E-01	--	--	7.0E+00	2.3E+01	--	--	--	--	--	--	--	--	**--**	**--**	**7.0E+00**	**2.3E+01**
Hexachlorocyclohexane Gamma-BHC[C] (Lindane)	0	9.5E-01	--	1.9E-01	6.3E-01	1.3E+01	--	9.5E+00	3.2E+01	--	--	--	--	--	--	--	--	**1.3E+01**	**--**	**9.5E+00**	**3.2E+01**
Hexachlorocyclopentadiene	0	--	--	2.4E+02	1.7E+04	--	--	1.2E+04	8.5E+05	--	--	--	--	--	--	--	--	**--**	**--**	**1.2E+04**	**8.5E+05**
Hexachloroethane[C]	0	--	--	1.9E+01	8.9E+01	--	--	9.5E+02	4.5E+03	--	--	--	--	--	--	--	--	**--**	**--**	**9.5E+02**	**4.5E+03**
Hydrogen Sulfide	0	--	2.0E+00	--	--	--	1.0E+02	--	--	--	--	--	--	--	--	--	--	**--**	**1.0E+02**	**--**	**--**
Indeno (1,2,3-cd) pyrene [C]	0	--	--	4.4E-02	4.9E-01	--	--	2.2E+00	2.5E+01	--	--	--	--	--	--	--	--	**--**	**--**	**2.2E+00**	**2.5E+01**
Iron	0	--	--	3.0E+02	--	--	--	1.5E+04	--	--	--	--	--	--	--	--	--	**--**	**--**	**1.5E+04**	**--**
Isophorone[C]	0	--	--	3.6E+02	2.6E+04	--	--	1.8E+04	1.3E+06	--	--	--	--	--	--	--	--	**--**	**--**	**1.8E+04**	**1.3E+06**
Kepone	0	--	0.0E+00	--	--	--	0.0E+00	--	--	--	--	--	--	--	--	--	--	**--**	**0.0E+00**	**--**	**--**
Lead	0	9.2E+01	8.3E+00	1.5E+01	--	1.3E+03	4.2E+02	7.5E+02	--	--	--	--	--	--	--	--	--	**1.3E+03**	**4.2E+02**	**7.5E+02**	**--**
Malathion	0	--	1.0E-01	--	--	--	5.0E+00	--	--	--	--	--	--	--	--	--	--	**--**	**5.0E+00**	**--**	**--**
Manganese	0	--	--	5.0E+01	--	--	--	2.5E+03	--	--	--	--	--	--	--	--	--	**--**	**--**	**2.5E+03**	**--**
Mercury	0	1.4E+00	7.7E-01	5.0E-02	5.1E-02	2.0E+01	3.9E+01	2.5E+00	2.6E+00	--	--	--	--	--	--	--	--	**2.0E+01**	**3.9E+01**	**2.5E+00**	**2.6E+00**
Methyl Bromide	0	--	--	4.8E+01	4.0E+03	--	--	2.4E+03	2.0E+05	--	--	--	--	--	--	--	--	**--**	**--**	**2.4E+03**	**2.0E+05**
Methoxychlor	0	--	3.0E-02	1.0E+02	--	--	1.5E+00	5.0E+03	--	--	--	--	--	--	--	--	--	**--**	**1.5E+00**	**5.0E+03**	**--**
Mirex	0	--	0.0E+00	--	--	--	0.0E+00	--	--	--	--	--	--	--	--	--	--	**--**	**0.0E+00**	**--**	**--**
Monochlorobenzene	0	--	--	6.8E+02	2.1E+04	--	--	3.4E+04	1.1E+06	--	--	--	--	--	--	--	--	**--**	**--**	**3.4E+04**	**1.1E+06**
Nickel	0	1.5E+02	1.5E+01	6.1E+02	4.6E+03	2.2E+03	7.4E+02	3.1E+04	2.3E+05	--	--	--	--	--	--	--	--	**2.2E+03**	**7.4E+02**	**3.1E+04**	**2.3E+05**
Nitrate (as N)	0	--	--	1.0E+04	--	--	--	5.0E+05	--	--	--	--	--	--	--	--	--	**--**	**--**	**5.0E+05**	**--**
Nitrobenzene	0	--	--	1.7E+01	1.9E+03	--	--	8.5E+02	9.5E+04	--	--	--	--	--	--	--	--	**--**	**--**	**8.5E+02**	**9.5E+04**
N-Nitrosodimethylamine[C]	0	--	--	6.9E-03	8.1E+01	--	--	3.5E-01	4.1E+03	--	--	--	--	--	--	--	--	**--**	**--**	**3.5E-01**	**4.1E+03**
N-Nitrosodiphenylamine[C]	0	--	--	5.0E+01	1.6E+02	--	--	2.5E+03	8.0E+03	--	--	--	--	--	--	--	--	**--**	**--**	**2.5E+03**	**8.0E+03**
N-Nitrosodi-n-propylamine[C]	0	--	--	5.0E-02	1.4E+01	--	--	2.5E+00	7.0E+02	--	--	--	--	--	--	--	--	**--**	**--**	**2.5E+00**	**7.0E+02**
Parathion	0	6.5E-02	1.3E-02	--	--	9.1E-01	6.5E-01	--	--	--	--	--	--	--	--	--	--	**9.1E-01**	**6.5E-01**	**--**	**--**
PCB-1016	0	--	1.4E-02	--	--	--	7.0E-01	--	--	--	--	--	--	--	--	--	--	**--**	**7.0E-01**	**--**	**--**
PCB-1221	0	--	1.4E-02	--	--	--	7.0E-01	--	--	--	--	--	--	--	--	--	--	**--**	**7.0E-01**	**--**	**--**
PCB-1232	0	--	1.4E-02	--	--	--	7.0E-01	--	--	--	--	--	--	--	--	--	--	**--**	**7.0E-01**	**--**	**--**
PCB-1242	0	--	1.4E-02	--	--	--	7.0E-01	--	--	--	--	--	--	--	--	--	--	**--**	**7.0E-01**	**--**	**--**
PCB-1248	0	--	1.4E-02	--	--	--	7.0E-01	--	--	--	--	--	--	--	--	--	--	**--**	**7.0E-01**	**--**	**--**
PCB-1254	0	--	1.4E-02	--	--	--	7.0E-01	--	--	--	--	--	--	--	--	--	--	**--**	**7.0E-01**	**--**	**--**
PCB-1260	0	--	1.4E-02	--	--	--	7.0E-01	--	--	--	--	--	--	--	--	--	--	**--**	**7.0E-01**	**--**	**--**
PCB Total[C]	0	--	--	1.7E-03	1.7E-03	--	--	8.5E-02	8.5E-02	--	--	--	--	--	--	--	--	**--**	**--**	**8.5E-02**	**8.5E-02**

Parameter	Background	Water Quality Criteria				Wasteload Allocations				Antidegradation Baseline				Antidegradation Allocations				**Most Limiting Allocations**			
(ug/l unless noted)	Conc.	Acute	Chronic	HH (PWS)	HH	Acute	Chronic	HH (PWS)	HH	Acute	Chronic	HH (PWS)	HH	Acute	Chronic	HH (PWS)	HH	**Acute**	**Chronic**	**HH (PWS)**	**HH**
Pentachlorophenol [C]	0	9.9E+00	7.5E+00	2.8E+00	8.2E+01	1.4E+02	3.7E+02	1.4E+02	4.1E+03	--	--	--	--	--	--	--	--	**1.4E+02**	**3.7E+02**	**1.4E+02**	**4.1E+03**
Phenol	0	--	--	2.1E+04	4.6E+06	--	--	1.1E+06	2.3E+08	--	--	--	--	--	--	--	--	**--**	**--**	**1.1E+06**	**2.3E+08**
Pyrene	0	--	--	9.6E+02	1.1E+04	--	--	4.8E+04	5.5E+05	--	--	--	--	--	--	--	--	**--**	**--**	**4.8E+04**	**5.5E+05**
Radionuclides (pCi/l except Beta/Photon)	0	--	--	--	--	--	--	--	--	--	--	--	--	--	--	--	--	**--**	**--**	**--**	**--**
Gross Alpha Activity	0	--	--	1.5E+01	1.5E+01	--	--	7.5E+02	7.5E+02	--	--	--	--	--	--	--	--	**--**	**--**	**7.5E+02**	**7.5E+02**
Beta and Photon Activity (mrem/yr)	0	--	--	4.0E+00	4.0E+00	--	--	2.0E+02	2.0E+02	--	--	--	--	--	--	--	--	**--**	**--**	**2.0E+02**	**2.0E+02**
Strontium-90	0	--	--	8.0E+00	8.0E+00	--	--	4.0E+02	4.0E+02	--	--	--	--	--	--	--	--	**--**	**--**	**4.0E+02**	**4.0E+02**
Tritium	0	--	--	2.0E+04	2.0E+04	--	--	1.0E+06	1.0E+06	--	--	--	--	--	--	--	--	**--**	**--**	**1.0E+06**	**1.0E+06**
Selenium	0	2.0E+01	5.0E+00	1.7E+02	1.1E+04	2.8E+02	2.5E+02	8.5E+03	5.5E+05	--	--	--	--	--	--	--	--	**2.8E+02**	**2.5E+02**	**8.5E+03**	**5.5E+05**
Silver	0	2.4E+00	--	--	--	3.4E+01	--	--	--	--	--	--	--	--	--	--	--	**3.4E+01**	**--**	**--**	**--**
Sulfate	0	--	--	2.5E+05	--	--	--	1.3E+07	--	--	--	--	--	--	--	--	--	**--**	**--**	**1.3E+07**	**--**
1,1,2,2-Tetrachloroethane[C]	0	--	--	1.7E+00	1.1E+02	--	--	8.5E+01	5.5E+03	--	--	--	--	--	--	--	--	**--**	**--**	**8.5E+01**	**5.5E+03**
Tetrachloroethylene[C]	0	--	--	8.0E+00	8.9E+01	--	--	4.0E+02	4.5E+03	--	--	--	--	--	--	--	--	**--**	**--**	**4.0E+02**	**4.5E+03**
Thallium	0	--	--	1.7E+00	6.3E+00	--	--	8.5E+01	3.2E+02	--	--	--	--	--	--	--	--	**--**	**--**	**8.5E+01**	**3.2E+02**
Toluene	0	--	--	6.8E+03	2.0E+05	--	--	3.4E+05	1.0E+07	--	--	--	--	--	--	--	--	**--**	**--**	**3.4E+05**	**1.0E+07**
Total dissolved solids	0	--	--	5.0E+05	--	--	--	2.5E+07	--	--	--	--	--	--	--	--	--	**--**	**--**	**2.5E+07**	**--**
Toxaphene [C]	0	7.3E-01	2.0E-04	7.3E-03	7.5E-03	1.0E+01	1.0E-02	3.7E-01	3.8E-01	--	--	--	--	--	--	--	--	**1.0E+01**	**1.0E-02**	**3.7E-01**	**3.8E-01**
Tributyltin	0	4.6E-01	6.3E-02	--	--	6.4E+00	3.2E+00	--	--	--	--	--	--	--	--	--	--	**6.4E+00**	**3.2E+00**	**--**	**--**
1,2,4-Trichlorobenzene	0	--	--	2.6E+02	9.4E+02	--	--	1.3E+04	4.7E+04	--	--	--	--	--	--	--	--	**--**	**--**	**1.3E+04**	**4.7E+04**
1,1,2-Trichloroethane[C]	0	--	--	6.0E+00	4.2E+02	--	--	3.0E+02	2.1E+04	--	--	--	--	--	--	--	--	**--**	**--**	**3.0E+02**	**2.1E+04**
Trichloroethylene [C]	0	--	--	2.7E+01	8.1E+02	--	--	1.4E+03	4.1E+04	--	--	--	--	--	--	--	--	**--**	**--**	**1.4E+03**	**4.1E+04**
2,4,6-Trichlorophenol [C]	0	--	--	2.1E+01	6.5E+01	--	--	1.1E+03	3.3E+03	--	--	--	--	--	--	--	--	**--**	**--**	**1.1E+03**	**3.3E+03**
2-(2,4,5-Trichlorophenoxy) propionic acid (Silvex)	0	--	--	5.0E+01	--	--	--	2.5E+03	--	--	--	--	--	--	--	--	--	**--**	**--**	**2.5E+03**	**--**
Vinyl Chloride[C]	0	--	--	2.3E-01	6.1E+01	--	--	1.2E+01	3.1E+03	--	--	--	--	--	--	--	--	**--**	**--**	**1.2E+01**	**3.1E+03**
Zinc	0	9.9E+01	8.6E+01	9.1E+03	6.9E+04	1.4E+03	4.3E+03	4.6E+05	3.5E+06	--	--	--	--	--	--	--	--	**1.4E+03**	**4.3E+03**	**4.6E+05**	**3.5E+06**

Notes:

1. All concentrations expressed as micrograms/liter (ug/l), unless noted otherwise
2. Discharge flow is highest monthly average or Form 2C maximum for Industries and design flow for Municipals
3. Metals measured as Dissolved, unless specified otherwise
4. "C" indicates a carcinogenic parameter
5. Regular WLAs are mass balances (minus background concentration) using the % of stream flow entered above under Mixing Information. Antidegradation WLAs are based upon a complete mix.
6. Antideg. Baseline = (0.25(WQC - background conc.) + background conc.) for acute and chronic
   = (0.1(WQC - background conc.) + background conc.) for human health
7. WLAs established at the following stream flows: 1Q10 for Acute, 30Q10 for Chronic Ammonia, 7Q10 for Other Chronic, 30Q5 for Non-carcinogens, Harmonic Mean for Carcinogens, and Annual Average for Dioxin. Mixing ratios may be substituted for stream flows where appropriate.

Metal	Target Value (SSTV)
Antimony	7.0E+02
Arsenic	5.0E+02
Barium	1.0E+05
Cadmium	1.8E+01
Chromium III	1.6E+03
Chromium VI	9.0E+01
Copper	6.2E+01
Iron	1.5E+04
Lead	2.5E+02
Manganese	2.5E+03
Mercury	2.5E+00
Nickel	4.4E+02
Selenium	1.1E+02
Silver	1.4E+01
Zinc	5.5E+02

Note: do not use QL's lower than the minimum QL's provided in agency guidance

VA0026557 – Phillip Morris USA Park 500
STATS.exe Analyses

Chemical = Copper
Chronic averaging period = 4
WLAa = 160
WLAc = 320
Q.L. = 20
# samples/mo. = 1
# samples/wk. = 1

Summary of Statistics:

observations = 1
Expected Value = 50
Variance = 900
C.V. = 0.6
97th percentile daily values = 121.670
97th percentile 4 day average = 83.1895
97th percentile 30 day average= 60.3026
< Q.L. = 0
Model used = BPJ Assumptions, type 2 data

No Limit is required for this material

The data are:

50

Chemical = Ammonia
Chronic averaging period = 30
WLAa = 120
WLAc = 43
Q.L. = 0.2
# samples/mo. = 4
# samples/wk. = 1

Summary of Statistics:

observations = 1
Expected Value = 22.0944
Variance = 175.738
C.V. = 0.6
97th percentile daily values = 53.7649
97th percentile 4 day average = 36.7604
97th percentile 30 day average= 26.6470
< Q.L. = 0
Model used = BPJ Assumptions, type 2 data

No Limit is required for this material

The data are:

22.0944

Chemical = Zinc
Chronic averaging period = 4
WLAa = 1500
WLAc = 4300
Q.L. = 10
# samples/mo. = 1
# samples/wk. = 1

Summary of Statistics:

observations = 1
Expected Value = 20
Variance = 144
C.V. = 0.6
97th percentile daily values = 48.6683
97th percentile 4 day average = 33.2758
97th percentile 30 day average= 24.1210
< Q.L. = 0
Model used = BPJ Assumptions, type 2 data

No Limit is required for this material

The data are:

20

Chemical = TRC
Chronic averaging period = 4
WLAa = 270
WLAc = 550
Q.L. = 100
# samples/mo. = 30
# samples/wk. = 7

Summary of Statistics:

observations = 1
Expected Value = 20000
Variance = 1440000
C.V. = 0.6
97th percentile daily values = 48668.3
97th percentile 4 day average = 33275.8
97th percentile 30 day average= 24121.0
< Q.L. = 0
Model used = BPJ Assumptions, type 2 data

A limit is needed based on Acute Toxicity
Maximum Daily Limit = 270
Average Weekly limit = 164.890945823048
Average Monthly LImit = 133.817714244273

The data are:

20000

VA0026557 – Phillip Morris USA Park 500
STATS.exe Analyses

Chemical = Chlorides
Chronic averaging period = 4
WLAa = 12000000
WLAc = 12000000
Q.L. = 9
# samples/mo. = 1
# samples/wk. = 1

Summary of Statistics:

observations = 1
Expected Value = 351000
Variance = 4435236
C.V. = 0.6
97th percentile daily values = 854129.
97th percentile 4 day average = 583990.
97th percentile 30 day average= 423324.
< Q.L. = 0
Model used = BPJ Assumptions, type 2 data

No Limit is required for this material

The data are:

351000

Attachment 9 - DMR Data

VA0026557 - Phillip Morris USA Park 500 - DMR Data

Flow

Due Date	Quant Avg	Quanti Max
10-Jul-2004	1.76745	2.24846
10-Aug-2004	1.51083	2.11220
10-Sep-2004	1.89955	2.49536
10-Oct-2004	1.90295	2.07717
10-Nov-2004	1.93195	2.36328
10-Dec-2004	1.90492	2.10556
10-Jan-2005	1.66684	2.25530
10-Feb-2005	1.92017	2.26025
10-Mar-2005	2.04542	2.22388
10-Apr-2005	1.75505	2.23675
10-May-2005	2.01689	2.35967
10-Jun-2005	2.00572	2.23980
10-Jul-2005	1.98445	2.22963
10-Aug-2005	1.56957	1.95925
10-Sep-2005	1.994821	2.255333
10-Oct-2005	2.013879	2.261016
10-Nov-2005		
10-Dec-2005	2.075254	2.469877
10-Jan-2006	1.702492	2.416550
10-Feb-2006	1.836268	2.099039
10-Mar-2006	2.016060	2.262999
10-Apr-2006	1.683224	1.974792
10-May-2006	1.689534	2.082454
10-Jun-2006	1.891081	2.10085
10-Jul-2006	1.998826	2.250629
10-Aug-2006	1.749184	2.337278
10-Sep-2006	2.007663	0.130238
10-Oct-2006	2.033849	2.426958
10-Nov-2006	1.970617	2.493695
10-Dec-2006	1.358667	1.737537
10-Jan-2007	1.219369	2.053833
10-Feb-2007	1.792167	2.146472
10-Mar-2007	1.923732	2.104432
10-Apr-2007	1.828647	2.195692
10-May-2007	1.665021	2.029575
10-Jun-2007	1.841711	2.132917
10-Jul-2007	1.700594	2.007156
10-Aug-2007	1.545594	2.077267
10-Sep-2007	1.625297	2.024565
10-Oct-2007	1.303681	1.673032
10-Nov-2007	1.120848	1.269430
10-Dec-2007	1.044822	1.147020
10-Jan-2008	0.998545	1.244962
10-Feb-2008	1.508172	1.883739
10-Mar-2008	1.689572	2.056088
10-Apr-2008	1.614507	1.860668
10-May-2008	1.768502	2.204727
10-Jun-2008	1.636674	1.964429
10-Jul-2008	1.496358	1.820786
10-Aug-2008	1.141366	1.392633
10-Sep-2008	1.262170	1.552024
10-Oct-2008	1.236082	1.584036
10-Nov-2008	1.358230	1.645873
10-Dec-2008	1.229718	1.411293
10-Jan-2009	1.134109	1.510124
10-Feb-2009	1.185028	1.328870

pH

Due Date	Conc Min	Conc Max
10-Jul-2004	7.4	8.0
10-Aug-2004	7.5	7.9
10-Sep-2004	7.6	7.8
10-Oct-2004	7.6	7.9
10-Nov-2004	7.5	7.9
10-Dec-2004	7.6	7.9
10-Jan-2005	7.4	7.8
10-Feb-2005	7.1	7.9
10-Mar-2005	7.7	8.0
10-Apr-2005	7.4	7.9
10-May-2005	7.5	7.9
10-Jun-2005	7.7	8.0
10-Jul-2005	7.5	8.0
10-Aug-2005	6.8	8.0
10-Sep-2005	7.5	7.9
10-Oct-2005	7.4	8.0
10-Dec-2005	7.6	7.9
10-Jan-2006	7.1	7.8
10-Feb-2006	6.7	8.1
10-Mar-2006	7.5	8.0
10-Apr-2006	7.2	7.9
10-May-2006	7.7	8.0
10-Jun-2006	7.6	7.9
10-Jul-2006	7.3	7.9
10-Aug-2006	6.7	7.9
10-Sep-2006	7.5	7.8
10-Oct-2006	7.2	7.7
10-Nov-2006	7.3	7.7
10-Dec-2006	6.7	7.7
10-Jan-2007	6.7	7.3
10-Feb-2007	6.5	7.5
10-Mar-2007	7.4	7.9
10-Apr-2007	7.5	7.9
10-May-2007	7.2	8.0
10-Jun-2007	7.6	8.1
10-Jul-2007	7.5	7.9
10-Aug-2007	7.2	8
10-Sep-2007	7.8	8.1
10-Oct-2007	7.5	7.9
10-Nov-2007	7.8	8.0
10-Dec-2007	7.7	8.0
10-Jan-2008	7.5	7.8
10-Feb-2008	6.95	8.01
10-Mar-2008	7.3	7.7
10-Apr-2008	7.4	7.8
10-May-2008	7.4	7.7
10-Jun-2008	7.2	7.5
10-Jul-2008	7.2	7.5
10-Aug-2008	6.7	7.2
10-Sep-2008	7.2	7.8
10-Oct-2008	7.2	7.6
10-Nov-2008	7.2	7.6
10-Dec-2008	7.4	7.8
10-Jan-2009	6.9	7.5
10-Feb-2009	6.6	7.5
90th Percentile		**8.00**
10th Percentile		**8.00**

DO

Due Date	Conc Min
10-Jul-2004	5.16
10-Aug-2004	5.69
10-Sep-2004	4.86
10-Oct-2004	5.44
10-Nov-2004	6.26
10-Dec-2004	5.07
10-Jan-2005	6.21
10-Feb-2005	6.48
10-Mar-2005	5.31
10-Apr-2005	5.98
10-May-2005	5.30
10-Jun-2005	5.24
10-Jul-2005	4.91
10-Aug-2005	5.53
10-Sep-2005	5.06
10-Oct-2005	5.48
10-Nov-2005	
10-Dec-2005	6.22
10-Jan-2006	8.13
10-Feb-2006	6.94
10-Mar-2006	5.73
10-Apr-2006	6.05
10-May-2006	5.95
10-Jun-2006	5.37
10-Jul-2006	5.19
10-Aug-2006	5.38
10-Sep-2006	5.37
10-Oct-2006	5.76
10-Nov-2006	5.73
10-Dec-2006	6.88
10-Jan-2007	8.49
10-Feb-2007	6.78
10-Mar-2007	6.21
10-Apr-2007	5.89
10-May-2007	6.22
10-Jun-2007	5.61
10-Jul-2007	5.06
10-Aug-2007	6.02
10-Sep-2007	5.52
10-Oct-2007	5.73
10-Nov-2007	6.10
10-Dec-2007	6.76
10-Jan-2008	7.44
10-Feb-2008	7.13
10-Mar-2008	6.48
10-Apr-2008	6.15
10-May-2008	5.28
10-Jun-2008	5.04
10-Jul-2008	5.19
10-Aug-2008	6.30
10-Sep-2008	5.91
10-Oct-2008	5.95
10-Nov-2008	6.06
10-Dec-2008	6.71
10-Jan-2009	8.34
10-Feb-2009	8.05

VA0026557 - Phillip Morris USA Park 500 - DMR Data

CBOD5				
Due Date	Quant Avg	Quanti Max	Conc Avg	Conc Max
10-Jul-2004	105	206	7	11
10-Aug-2004	21.2	84.8	1.3	5.0
10-Sep-2004	89.5	97.0	5.6	6.0
10-Oct-2004	78.3	119.0	4.8	7.0
10-Nov-2004	71.0	118.3	4.3	6.0
10-Dec-2004	114.1	148.8	7.0	9.0
10-Jan-2005	166.4	233.8	12.2	16.0
10-Feb-2005	92.0	143.6	5	8
10-Mar-2005	185.2	214.5	11	12
10-Apr-2005	118.1	242.7	7	14
10-May-2005	167.6	213.9	10	13
10-Jun-2005	111.8	161.1	7	10
10-Jul-2005	115.4	148.8	7	8
10-Aug-2005	11.6	46.5	1	5
10-Sep-2005	97.1	115.1	6	7
10-Oct-2005	51.1	106.3	3	6
10-Nov-2005				
10-Dec-2005	105.3	138.1	6	7
10-Jan-2006	66.7	134.5	5	10
10-Feb-2006	87.6	173.0	6	11
10-Mar-2006	156.2	208.8	9	12
10-Apr-2006	126.7	174.5	9	12
10-May-2006	131.8	152.7	9	12
10-Jun-2006	99.4	128.0	6	8
10-Jul-2006	126.6	168.9	7	9
10-Aug-2006	21.3	85.3	1	5
10-Sep-2006	127.5	158.1	7	9
10-Oct-2006	178	192	11	11
10-Nov-2006	139	148	9	10
10-Dec-2006	72	125	6	40
10-Jan-2007	27	58	3	6
10-Feb-2007	79	114	5	7
10-Mar-2007	121	148	8	10
10-Apr-2007	129	160	9	10
10-May-2007	85	108	6	7
10-Jun-2007	103	124	7	8
10-Jul-2007	99	111	7	8
10-Aug-2007	20	80	2	6
10-Sep-2007	83	100	6	7
10-Oct-2007	<QL	<QL	<QL	<QL
10-Nov-2007	22	60	2	6
10-Dec-2007	50	56	6	6
10-Jan-2008	51	100	6	11
10-Feb-2008	83	140	7	11
10-Mar-2008	93	133	7	9
10-Apr-2008	53	82	4	6
10-May-2008	52	102	3	7
10-Jun-2008	16	62	1	5
10-Jul-2008	68	87	6	6
10-Aug-2008	<QL	<QL	<QL	<QL
10-Sep-2008	40	59	4	6
10-Oct-2008	40	63	4	6
10-Nov-2008	47	66	4	6
10-Dec-2008	83	103	8	10
10-Jan-2009	65	91	7	9
10-Feb-2009	69	121	7	11

VA0026557 - Phillip Morris USA Park 500 - DMR Data

TSS

Due Date	Quant Avg	Quanti Max	Conc Avg	Conc Max
10-Jul-2004	105	201	7.1	12.1
10-Aug-2004	24.6	74.8	2.2	6.0
10-Sep-2004	80.0	131.5	5.1	8.3
10-Oct-2004	101.1	237.9	6.5	14.9
10-Nov-2004	220.4	364.7	13.2	19.7
10-Dec-2004	207.2	280.6	12.8	17.2
10-Jan-2005	273.2	407.0	20.7	40.0
10-Feb-2005	95.8	591.3	5.8	36.3
10-Mar-2005	145.1	219.5	8.4	12.3
10-Apr-2005	138.9	278.8	9.2	17.4
10-May-2005	200.1	439.9	11.8	24.9
10-Jun-2005	82.1	184.0	4.9	11.2
10-Jul-2005	114.2	230.2	6.8	13.0
10-Aug-2005	31.2	119.0	2.6	8.5
10-Sep-2005	145.6	250.2	8.5	14.8
10-Oct-2005	97.4	195.5	5.9	11.3
10-Nov-2005				
10-Dec-2005	75.8	126.9	4.1	6.2
10-Jan-2006	139.5	276.1	9.8	21.7
10-Feb-2006	90.9	272.1	5.8	16.7
10-Mar-2006	149.5	346.1	8.5	18.6
10-Apr-2006	123.8	221.0	8.7	15.3
10-May-2006	197.1	274.8	13.9	20.7
10-Jun-2006	121.7	239.9	7.7	15.0
10-Jul-2006	110.3	183.9	6.4	10.8
10-Aug-2006	22.5	61.8	2.2	3.9
10-Sep-2006	82.0	165.4	4.9	9.8
10-Oct-2006	131.3	194.3	7.7	11.2
10-Nov-2006	121	202	7.5	12.7
10-Dec-2006	82.3	353.3	7.0	28.3
10-Jan-2007	31	168	2.8	16.2
10-Feb-2007	70	203	4.5	12.6
10-Mar-2007	74	102	4.6	6.4
10-Apr-2007	113	209	7.3	11.4
10-May-2007	118	290	7.8	18.5
10-Jun-2007	96	185	6.2	12.0
10-Jul-2007	89	131	6.2	9.1
10-Aug-2007	51	109	4.0	8.2
10-Sep-2007	76	120	5.5	7.1
10-Oct-2007	45	96	4.0	7.7
10-Nov-2007	31	50	3.2	5.0
10-Dec-2007	31	66	3.5	7.4
10-Jan-2008	56	110	6.9	12.0
10-Feb-2008	116	357	8.9	27.3
10-Mar-2008	99	154	6.9	11.2
10-Apr-2008	51	77	3.7	5.8
10-May-2008	42	67	2.8	4.6
10-Jun-2008	29	52	2.2	4.4
10-Jul-2008	45	64	3.7	6.6
10-Aug-2008	24	41	2.6	4.5
10-Sep-2008	29	53	2.8	5.6
10-Oct-2008	41	71	4	7.2
10-Nov-2008	56	94	5.0	7.8
10-Dec-2008	61	145	5.9	13
10-Jan-2009	71	110	7.6	12
10-Feb-2009	116	189	11.5	19.5

VA0026557 - Phillip Morris USA Park 500 - DMR Data

PHOSPHORUS, TOTAL (AS P)

Due Date	Quant Avg	Quanti Max	Conc Avg	Conc Max
10-Jul-2004	23	37	1.6	2.4
10-Aug-2004	3.7	4.3	0.69	0.73
10-Sep-2004	6.3	6.7	0.85	0.86
10-Oct-2004	11.0	12.1	1.48	1.64
10-Nov-2004	10.6	12.1	1.44	1.66
10-Dec-2004	7.6	7.8	1.06	1.06
10-Jan-2005	6.3	7.2	1.03	1.08
10-Feb-2005	6.4	10.9	0.87	1.48
10-Mar-2005	4.4	4.8	0.57	0.59
10-Apr-2005	3.6	4.1	0.55	0.57
10-May-2005	7.6	10.4	0.97	1.30
10-Jun-2005	7.3	10.8	0.93	1.40
10-Jul-2005	4.2	6.1	0.55	0.75
10-Aug-2005	8.7	10.0	1.52	2.00
10-Sep-2005	5.1	7.8	0.67	1.02
10-Oct-2005	3.7	4.0	0.49	0.51
10-Nov-2005				
10-Dec-2005	6.8	7.6	0.75	0.81
10-Jan-2006	5.3	9.5	0.65	1.04
10-Feb-2006	4.9	8.0	0.66	1.08
10-Mar-2006	10.7	18.3	1.31	2.17
10-Apr-2006	4.3	6.7	0.70	1.09
10-May-2006	7.9	10.4	1.50	2.21
10-Jun-2006	8.7	10.3	1.17	1.32
10-Jul-2006	5.8	9.1	0.78	1.22
10-Aug-2006	2.3	2.4	0.40	0.49
10-Sep-2006	4.9	5.6	0.65	0.73
10-Oct-2006	7.9	11.5	1.01	1.40
10-Nov-2006	4.6	4.6	0.62	0.63
10-Dec-2006	2.3	3.0	0.52	0.66
10-Jan-2007	2.2	3.7	0.32	0.50
10-Feb-2007	1.8	3.4	0.26	0.47
10-Mar-2007	1.9	2.6	0.26	0.35
10-Apr-2007	2.1	2.5	0.32	0.34
10-May-2007	3.0	3.2	0.45	0.48
10-Jun-2007	3.8	4.2	0.55	0.62
10-Jul-2007	7.7	12.8	1.19	2.01
10-Aug-2007	3.1	3.3	.58	.60
10-Sep-2007	9.2	11.6	1.48	1.84
10-Oct-2007	6.0	8.1	1.33	1.93
10-Nov-2007	4.3	4.8	0.97	1.03
10-Dec-2007	6.1	6.2	1.61	1.70
10-Jan-2008	5.5	6.5	1.33	1.64
10-Feb-2008	5.6	9.4	0.95	1.58
10-Mar-2008	3.3	3.6	0.48	0.54
10-Apr-2008	1.5	1.8	0.26	0.30
10-May-2008	2.8	2.8	0.38	0.43
10-Jun-2008	2.5	2.6	0.39	0.43
10-Jul-2008	2.2	3.1	0.34	0.45
10-Aug-2008	1.6	2.4	0.34	0.49
10-Sep-2008	0.9	0.9	0.21	0.21
10-Oct-2008	2.2	3.0	0.47	0.65
10-Nov-2008	1.3	1.5	0.29	0.31
10-Dec-2008	3.8	5.6	0.83	1.25
10-Jan-2009	4.1	7.1	0.96	1.61
10-Feb-2009	3.3	3.5	0.73	0.82

VA0026557 - Phillip Morris USA Park 500 - DMR Data

NITROGEN, TOTAL (AS N)

Due Date	Quant Avg	Quanti Max	Conc Avg	Conc Max
10-Jul-2004	206	217	14	15
10-Aug-2004	64	68	10.5	13.4
10-Sep-2004	89	91	12.8	12.9
10-Oct-2004	122	124	16.5	16.8
10-Nov-2004	111	116	15.1	15.7
10-Dec-2004	111	113	15.0	15.2
10-Jan-2005	105	128	16.3	17.0
10-Feb-2005	66	87	8.7	11.7
10-Mar-2005	112	114	14.7	15.3
10-Apr-2005	95	111	14.1	14.8
10-May-2005	100	112	13.6	14.8
10-Jun-2005	99	113	13.3	15.1
10-Jul-2005	97	107	12.8	14.0
10-Aug-2005	56	75	10.4	10.4
10-Sep-2005	118	121	15.7	16.1
10-Oct-2005	91	97	11.9	13.4
10-Nov-2005				
10-Dec-2005	88	96	11.7	11.8
10-Jan-2006	64	94	9.5	12.0
10-Feb-2006	72	72	11.0	11.0
10-Mar-2006	106	118	14.3	15.1
10-Apr-2006	77	88	11.9	13.1
10-May-2006	89	97	14.4	15.5
10-Jun-2006	96	115	13.4	14.8
10-Jul-2006	97	100	13.4	14.6
10-Aug-2006	73	88	11.2	11.5
10-Sep-2006	104	105	14.3	14.3
10-Oct-2006	135	138	17.6	18.1
10-Nov-2006	120	133	15.2	17.0
10-Dec-2006	67	71	13.0	13.1
10-Jan-2007	44	61	8.0	9.6
10-Feb-2007	73	122	10.0	15.6
10-Mar-2007	104	118	14.3	16.3
10-Apr-2007	109	125	15.5	17.5
10-May-2007	77	86	12.5	16.0
10-Jun-2007	67	77	10.4	11.5
10-Jul-2007	93	109	15.3	17.8
10-Aug-2007	52	70	9.0	11.6
10-Sep-2007	76	95	12.7	16.0
10-Oct-2007	52	59	10.4	11.4
10-Nov-2007	36	42	8.4	9.3
10-Dec-2007	40	44	10.3	10.9
10-Jan-2008	47	56	12.3	14.9
10-Feb-2008	71	96	12.8	15.9
10-Mar-2008	96	117	15.4	19.3
10-Apr-2008	79	115	12.9	17.0
10-May-2008	69	92	10.6	13.3
10-Jun-2008	66	80	10.6	12.0
10-Jul-2008	73	99	13.1	15.4
10-Aug-2008	33	37	8.3	11.3
10-Sep-2008	37	48	7.9	11.2
10-Oct-2008	47	53	10.3	11.5
10-Nov-2008	44	49	8.9	10.9
10-Dec-2008	59	82	12.5	16.4
10-Jan-2009	62	106	14.7	24.0
10-Feb-2009	57	69	11.7	13.7

VA0026557 - Phillip Morris USA Park 500 - DMR Data

AMMONIA, AS N

Due Date	Quant Avg	Quanti Max	Conc Avg	Conc Max
10-Jul-2004	6	10	0.4	0.5
10-Aug-2004	4.2	6.7	0.3	0.4
10-Sep-2004	7	7.4	0.46	0.53
10-Oct-2004	6.6	7.7	0.41	0.47
10-Nov-2004	<QL	<QL	<QL	<QL
10-Dec-2004	4.5	10.2	0.27	0.59
10-Jan-2005	5.2	9.9	0.34	0.55
10-Feb-2005	3.8	6.7	0.23	0.41
10-Mar-2005	5.7	6.4	0.34	0.41
10-Apr-2005	3.1	4.9	0.19	0.27
10-May-2005	4.9	6.1	0.3	0.37
10-Jun-2005	5.6	7.9	0.34	0.47
10-Jul-2005	5	5.9	0.32	0.36
10-Aug-2005	2.9	4.9	0.23	0.38
10-Sep-2005	6.1	7	0.36	0.43
10-Oct-2005	6.4	6.8	0.37	0.41
10-Nov-2005				
10-Dec-2005	5.2	7.3	0.29	0.39
10-Jan-2006	1.9	4.2	0.11	0.24
10-Feb-2006	4.4	7	0.29	0.43
10-Mar-2006	7.3	8.6	0.43	0.5
10-Apr-2006	6.2	7.4	0.44	0.52
10-May-2006	4.4	4.9	0.31	0.37
10-Jun-2006	7	10.3	0.44	0.6
10-Jul-2006	5.9	6.6	0.36	0.39
10-Aug-2006	4.3	5.7	0.28	0.38
10-Sep-2006	7.6	8.2	0.46	0.5
10-Oct-2006	10.2	13.3	0.61	0.79
10-Nov-2006	8	11.2	0.49	0.65
10-Dec-2006	2.6	4	0.23	0.33
10-Jan-2007	0.5	2.1	0.05	0.21
10-Feb-2007	4.6	8.1	0.29	0.51
10-Mar-2007	5	5.8	0.31	0.39
10-Apr-2007	6.2	7.5	0.4	0.48
10-May-2007	3.5	5.6	0.24	0.39
10-Jun-2007	3.9	4.6	0.27	0.3
10-Jul-2007	4.1	4.2	0.31	0.33
10-Aug-2007	1.9	3.4	0.15	0.29
10-Sep-2007	5	5.5	0.37	0.39
10-Oct-2007	3.7	5	0.33	0.44
10-Nov-2007	1.2	2.3	0.13	0.23
10-Dec-2007	2.3	2.9	0.26	0.34
10-Jan-2008	1.3	3.1	0.16	0.35
10-Feb-2008	5.4	9.8	0.42	0.7
10-Mar-2008	6.4	8.5	0.46	0.6
10-Apr-2008	4	4.3	0.3	0.31
10-May-2008	3.9	5.4	0.27	0.35
10-Jun-2008	3.6	3.8	0.26	0.28
10-Jul-2008	4.3	5	0.36	0.5
10-Aug-2008	2.2	2.9	0.25	0.29
10-Sep-2008	3.9	6.3	0.39	0.67
10-Oct-2008	3.1	3.8	0.31	0.39
10-Nov-2008	3.8	6	0.34	0.48
10-Dec-2008	3	3.7	0.29	0.34
10-Jan-2009	2.9	4.5	0.31	0.46
10-Feb-2009	1.3	3	0.13	0.27

VA0026557 - Phillip Morris USA Park 500 - DMR Data

TKN

Due Date	Quant Avg	Quanti Max	Conc Avg	Conc Max
10-Aug-2004	51	58	8.0	8.6
10-Sep-2004	81	81	11.5	11.5
10-Oct-2004	104	106	14.0	14.2
10-Nov-2004	96	109	12.9	13.6
10-Dec-2004	103	110	13.9	14.8
10-Jan-2005	92	122	13.9	14.9
10-Feb-2005	63	84	8.4	11.2
10-Mar-2005	109	109	14.3	15.1
10-Apr-2005	78	104	11.1	12.6
10-May-2005	96	107	13.1	14.1
10-Jun-2005	88	98	11.8	13.1
10-Jul-2005	89	98	11.7	12.8
10-Aug-2005	46	68	8.1	9.5
10-Sep-2005	107	109	14.2	14.5
10-Oct-2005	81	86	10.6	11.9
10-Nov-2005				
10-Dec-2005	81	88	10.7	10.8
10-Jan-2006	56	79	8.4	10.1
10-Feb-2006	71	71	10.9	10.9
10-Mar-2006	102	113	13.8	14.4
10-Apr-2006	75	87	11.6	12.9
10-May-2006	69	84	11.1	13.4
10-Jun-2006	77	87	10.7	11.8
10-Jul-2006	83	88	11.4	11.4
10-Aug-2006	52	77	7.6	10.1
10-Sep-2006	91	91	12.5	12.8
10-Oct-2006	111	112	14.4	14.6
10-Nov-2006	106	112	13.5	14.3
10-Dec-2006	48	67	9.4	12.2
10-Jan-2007	30	41	5.5	6.5
10-Feb-2007	63	94	8.7	12.0
10-Mar-2007	99	118	13.6	15.8
10-Apr-2007	93	122	13.3	16.0
10-May-2007	56	66	8.9	10.4
10-Jun-2007	61	71	9.4	10.5
10-Jul-2007	69	78	11.4	12.8
10-Aug-2007	44	63	7.6	10.5
10-Sep-2007	70	92	11.7	15.4
10-Oct-2007	40	46	8.0	8.4
10-Nov-2007	33	37	7.7	8.4
10-Dec-2007	36	39	9.4	9.9
10-Jan-2008	38	46	10.2	11.6
10-Feb-2008	67	89	12.1	15.8
10-Mar-2008	85	103	13.6	17.0
10-Apr-2008	71	107	11.6	15.8
10-May-2008	61	87	9.4	12.5
10-Jun-2008	55	64	8.9	9.7
10-Jul-2008	52	62	9.3	10.3
10-Aug-2008	24	32	5.6	6.5
10-Sep-2008	34	46	7.2	10.8
10-Oct-2008	40	42	8.8	9.2
10-Nov-2008	42	48	8.4	9.3
10-Dec-2008	50	70	10.7	14.0
10-Jan-2009	42	53	10.0	12.9
10-Feb-2009	43	56	8.9	11.4

VA0026557 - Phillip Morris USA Park 500 - DMR Data

CL2, TOTAL

Due Date	Conc Avg	Conc Min	Conc Max
10-Jul-04		1.58	2.48
10-Aug-08	<QL		<QL
10-Sep-08	<QL		<QL
10-Oct-08	<QL		<QL
10-Nov-08	<QL		<QL
10-Dec-08	<QL		<QL
10-Jan-09	<QL		<QL
10-Feb-09	<QL		<QL

CL2, INST RES MAX TECH

Due Date	Conc Max
10-Jul-04	2.48

CL2, INST TECH MIN LIMIT

Due Date	Conc Min
10-Aug-08	2.1
10-Sep-08	2.08
10-Oct-08	2.48
10-Nov-08	2.46
10-Dec-08	2.68
10-Jan-09	2.4
10-Feb-09	2.08

VA0026557 - Phillip Morris USA - Park 500 DMR Data

NITRITE+NITRATE-N,TOTAL

Due Date	Quanti Avg	Quanti Max	Conc Avg	Conc Max
10-Aug-2004	12.8	24.3	2.5	4.8
10-Sep-2004	8.7	9.9	1.2	1.4
10-Oct-2004	18.3	18.7	2.5	2.6
10-Nov-2004	16.0	24.7	2.3	3.6
10-Dec-2004	8.1	13.1	1.1	1.8
10-Jan-2005	12.9	20.2	2.4	4.2
10-Feb-2005	2.5	3.4	0.3	0.5
10-Mar-2005	3.0	4.6	0.4	0.6
10-Apr-2005	17.2	28.2	3.0	5.3
10-May-2005	3.8	5.5	0.5	0.7
10-Jun-2005	11.8	15.1	1.6	2.0
10-Jul-2005	8.0	8.9	1.0	1.2
10-Aug-2005	10.2	13.6	2.4	3.8
10-Sep-2005	11.3	12.2	1.5	1.6
10-Oct-2005	10.2	10.6	1.3	1.5
10-Nov-2005				
10-Dec-2005	7.7	8.1	1.0	1.1
10-Jan-2006	8.1	14.9	1.1	1.9
10-Feb-2006	0.8	1.4	0.1	0.2
10-Mar-2006	3.7	5.3	0.5	0.7
10-Apr-2006	2.3	3.2	0.4	0.5
10-May-2006	20.4	27.5	3.3	4.5
10-Jun-2006	18.8	28.1	2.6	3.6
10-Jul-2006	14.2	21.8	2.0	3.2
10-Aug-2006	20.6	30.3	3.6	5.7
10-Sep-2006	13.1	15.6	1.8	2.1
10-Oct-2006	24.5	26.4	3.2	3.5
10-Nov-2006	13.5	20.9	1.7	2.7
10-Dec-2006	10.7	16.9	2.2	3.5
10-Jan-2007	14.0	19.8	2.5	3.1
10-Feb-2007	10.0	28.2	1.3	3.6
10-Mar-2007	5.0	14.4	0.7	1.9
10-Apr-2007	15.5	29.7	2.2	4.2
10-May-2007	21.2	50.5	3.7	9.4
10-Jun-2007	6.5	10.6	1.1	2.0
10-Jul-2007	23.6	30.5	3.9	5.0
10-Aug-2007	8.0	11.8		
10-Sep-2007	6.3	10.2	1.1	1.8
10-Oct-2007	12.1	16.8	2.4	3.2
10-Nov-2007	3.1	5.4	0.7	1.2
10-Dec-2007	3.7	8.7	0.9	2.2
10-Jan-2008	8.1	15.0	2.1	4.0
10-Feb-2008	4.1	12.2	0.7	2.1
10-Mar-2008	11.4	18.5	1.8	2.9
10-Apr-2008	7.9	12.4	1.3	2.3
10-May-2008	7.7	9.7	1.2	1.5
10-Jun-2008	10.6	15.7	1.7	2.4
10-Jul-2008	21.2	36.4	3.8	5.6
10-Aug-2008	9.0	14.6	2.7	6.5
10-Sep-2008	3.2	4.0	0.7	0.8
10-Oct-2008	6.8	11.6	1.5	2.5
10-Nov-2008	2.5	6.7	0.5	1.5
10-Dec-2008	8.7	13.4	1.8	2.8
10-Jan-2009	20.3	55.5	4.7	12.6
10-Feb-2009	13.8	43.4	2.8	8.6

NITROGEN, TOTAL (AS N)
(MONTHLY LOAD)

Due Date	Quanti Max
10-Aug-2004	1974
10-Sep-2004	NR
10-Oct-2004	NR
10-Nov-2004	3453
10-Dec-2004	3336
10-Jan-2005	3253
10-Feb-2005	2034
10-Mar-2005	3135
10-Apr-2005	2945
10-May-2005	2993
10-Jun-2005	3082
10-Jul-2005	2911
10-Aug-2005	1745
10-Sep-2005	3667
10-Oct-2005	2734
10-Nov-2005	
10-Dec-2005	2654
10-Jan-2006	1980
10-Feb-2006	2223
10-Mar-2006	2965
10-Apr-2006	2395
10-May-2006	2670
10-Jun-2006	2990
10-Jul-2006	2906
10-Aug-2006	2255
10-Sep-2006	3213
10-Oct-2006	4059
10-Nov-2006	3714
10-Dec-2006	2011
10-Jan-2007	1374
10-Feb-2007	2250
10-Mar-2007	2926
10-Apr-2007	3367
10-May-2007	2324
10-Jun-2007	2083
10-Jul-2007	2775
10-Aug-2007	1608
10-Sep-2007	2368
10-Oct-2007	1560
10-Nov-2007	1104
10-Dec-2007	1197
10-Jan-2008	1445
10-Feb-2008	2215
10-Mar-2008	2790
10-Apr-2008	2434
10-May-2008	2074
10-Jun-2008	2048
10-Jul-2008	2196
10-Aug-2008	1017
10-Sep-2008	1149
10-Oct-2008	1401
10-Nov-2008	1366
10-Dec-2008	1772
10-Jan-2009	1927
10-Feb-2009	1772

NITROGEN, TOTAL (AS N)
(CALENDAR YEAR)

Due Date	Quanti Max
10-Aug-2004	21991
10-Sep-2004	NR
10-Oct-2004	NR
10-Nov-2004	
10-Dec-2004	
10-Jan-2005	
10-Feb-2005	2034
10-Mar-2005	5169
10-Apr-2005	8114
10-May-2005	11107
10-Jun-2005	14189
10-Jul-2005	17100
10-Aug-2005	18845
10-Sep-2005	22512
10-Oct-2005	25246
10-Nov-2005	
10-Dec-2005	31166
10-Jan-2006	33147
10-Feb-2006	2223
10-Mar-2006	5188
10-Apr-2006	7583
10-May-2006	10253
10-Jun-2006	13243
10-Jul-2006	16149
10-Aug-2006	18404
10-Sep-2006	21617
10-Oct-2006	25676
10-Nov-2006	29390
10-Dec-2006	31401
10-Jan-2007	32775
10-Feb-2007	2250
10-Mar-2007	5175
10-Apr-2007	8543
10-May-2007	10867
10-Jun-2007	12950
10-Jul-2007	15725
10-Aug-2007	17334
10-Sep-2007	19702
10-Oct-2007	21264
10-Nov-2007	22367
10-Dec-2007	23564
10-Jan-2008	25009
10-Feb-2008	2215
10-Mar-2008	5005
10-Apr-2008	7439
10-May-2008	9513
10-Jun-2008	11561
10-Jul-2008	13757
10-Aug-2008	14774
10-Sep-2008	15923
10-Oct-2008	17324
10-Nov-2008	18690
10-Dec-2008	20462
10-Jan-2009	22389
10-Feb-2009	1772

VA0026557 - Phillip Morris USA - Park 500 DMR Data

PHOSPHORUS, TOTAL (AS P) (MONTHLY LOAD)

Due Date	Quanti Avg	Quanti Max
10-Aug-2004		115
10-Sep-2004		NR
10-Oct-2004		NR
10-Nov-2004		327
10-Dec-2004		228
10-Jan-2005		196
10-Feb-2005		198
10-Mar-2005		124
10-Apr-2005		112
10-May-2005		227
10-Jun-2005		225
10-Jul-2005		127
10-Aug-2005		271
10-Sep-2005		159
10-Oct-2005		112
10-Nov-2005		
10-Dec-2005		203
10-Jan-2006		165
10-Feb-2006		151
10-Mar-2006		299
10-Apr-2006		133
10-May-2006		237
10-Jun-2006		269
10-Jul-2006		175
10-Aug-2006		72
10-Sep-2006		153
10-Oct-2006		236
10-Nov-2006		141
10-Dec-2006		70
10-Jan-2007		67
10-Feb-2007		55
10-Mar-2007		54
10-Apr-2007		65
10-May-2007		91
10-Jun-2007		117
10-Jul-2007		230
10-Aug-2007		96
10-Sep-2007		284
10-Oct-2007		181
10-Nov-2007		134
10-Dec-2007		183
10-Jan-2008		170
10-Feb-2008		174
10-Mar-2008		97
10-Apr-2008		47
10-May-2008		83
10-Jun-2008		76
10-Jul-2008		65
10-Aug-2008		51
10-Sep-2008		27
10-Oct-2008		65
10-Nov-2008		41
10-Dec-2008		115
10-Jan-2009		126
10-Feb-2009		102

PHOSPHORUS, TOTAL (AS P) (CALENDAR YEAR)

Due Date	Quanti Max
10-Aug-2004	1796
10-Sep-2004	NR
10-Oct-2004	NR
10-Nov-2004	
10-Dec-2004	
10-Jan-2005	
10-Feb-2005	198
10-Mar-2005	323
10-Apr-2005	434
10-May-2005	662
10-Jun-2005	887
10-Jul-2005	1014
10-Aug-2005	1285
10-Sep-2005	1444
10-Oct-2005	1556
10-Nov-2005	
10-Dec-2005	1911
10-Jan-2006	2076
10-Feb-2006	151
10-Mar-2006	449
10-Apr-2006	582
10-May-2006	819
10-Jun-2006	1089
10-Jul-2006	1264
10-Aug-2006	1336
10-Sep-2006	1488
10-Oct-2006	1724
10-Nov-2006	1865
10-Dec-2006	1935
10-Jan-2007	2002
10-Feb-2007	55
10-Mar-2007	108
10-Apr-2007	174
10-May-2007	265
10-Jun-2007	382
10-Jul-2007	612
10-Aug-2007	708
10-Sep-2007	992
10-Oct-2007	1173
10-Nov-2007	1307
10-Dec-2007	1490
10-Jan-2008	1660
10-Feb-2008	174
10-Mar-2008	271
10-Apr-2008	318
10-May-2008	401
10-Jun-2008	477
10-Jul-2008	543
10-Aug-2008	593
10-Sep-2008	620
10-Oct-2008	685
10-Nov-2008	726
10-Dec-2008	841
10-Jan-2009	967
10-Feb-2009	102

VA0026557 - Phillip Morris USA - Park 500 DMR Data

ORTHOPHOSPHATE (AS P)

Due Date	Quanti Avg	Quanti Max	Conc Avg	Conc Max
10-Aug-2004	3.6	4.3	0.66	0.67
10-Sep-2004	5.1	5.1	0.69	0.72
10-Oct-2004	9.5	10.8	1.28	1.46
10-Nov-2004	8.6	11.5	1.18	1.58
10-Dec-2004	5.8	7.2	0.81	0.97
10-Jan-2005	3.9	4.2	0.64	0.71
10-Feb-2005	1.8	2.6	0.25	0.35
10-Mar-2005	3.4	3.6	0.44	0.48
10-Apr-2005	2.9	3.7	0.42	0.46
10-May-2005	4.4	4.6	0.57	0.57
10-Jun-2005	6.0	9.0	0.76	1.16
10-Jul-2005	3.1	4.5	0.40	0.56
10-Aug-2005	6.9	7.0	1.18	1.4
10-Sep-2005	3.1	4.5	0.41	0.59
10-Oct-2005	1.2	1.5	0.16	0.2
10-Nov-2005				
10-Dec-2005	5.9	6.6	0.66	0.71
10-Jan-2006	2.7	4.9	0.31	0.54
10-Feb-2006	1.9	2.9	0.26	0.39
10-Mar-2006	6.4	10.8	0.78	1.28
10-Apr-2006	1.9	3.5	0.32	0.57
10-May-2006	5.7	9.6	1.15	2.04
10-Jun-2006	6.8	8.2	0.91	1.05
10-Jul-2006		7.2	0.55	0.97
10-Aug-2006	1.7	2.0	0.29	0.40
10-Sep-2006	3.5	4.2	0.46	0.55
10-Oct-2006	6.2	9.7	0.79	1.18
10-Nov-2006	2.8	3.1	0.38	0.42
10-Dec-2006	0.8	1.1	0.18	0.25
10-Jan-2007	1.2	2.0	0.19	0.27
10-Feb-2007	0.4	0.8	0.06	0.11
10-Mar-2007	0.5	1.1	0.08	0.15
10-Apr-2007	0.7	0.7	0.10	0.10
10-May-2007	2.0	2.2	0.29	0.33
10-Jun-2007	3.1	3.2	0.45	0.48
10-Jul-2007	5.7	10.1	0.89	1.59
10-Aug-2007	2.3	2.5	.44	.47
10-Sep-2007	8.0	10.5	1.29	1.66
10-Oct-2007	5.3	7.2	1.18	1.72
10-Nov-2007	3.7	4.2	0.83	0.90
10-Dec-2007	5.6	5.7	1.47	1.57
10-Jan-2008	4.8	6.0	1.17	1.51
10-Feb-2008	1.6	2.4	0.28	0.41
10-Mar-2008	1.9	2.2	0.28	0.34
10-Apr-2008	0.7	0.8	0.12	0.13
10-May-2008	1.8	1.8	0.25	0.28
10-Jun-2008	1.9	2.1	0.30	0.34
10-Jul-2008	1.4	2.1	0.21	0.31
10-Aug-2008	1.1	1.8	0.23	0.36
10-Sep-2008	0.5	0.6	0.13	0.14
10-Oct-2008	1.4	2.5	0.32	0.55
10-Nov-2008	0.4	0.6	0.08	0.12
10-Dec-2008	2.5	4.1	0.55	0.91
10-Jan-2009	3.5	6.4	0.82	1.45
10-Feb-2009	0.8	0.8	0.17	0.17