VPDES PERMIT PROGRAM FACT SHEET

This document gives pertinent information concerning the reissuance of the VPDES permit listed below. This permit is being processed as a Major, Industrial permit. The effluent limitations contained in this permit will maintain the Water Quality Standards (WQS) of 9VAC25-260. Dominion-Bremo Power Station (BPS) previously generated electricity with steam produced by the combustion of coal. The station fuel was converted from coal to gas in May 2014. BPS now generates electricity with steam produced by the combustion of gas. Two gas-fired generating units are used. Unit 3's maximum capacity is 76 MW and Unit 4's maximum capacity is 168 MW according to the 2015 Application. BPS uses a once-through cooling water system with a shoreline cooling water intake structure. The discharge results from the operation of a steam electric power generating plant. This permit action consists of reissuing the permit with revisions to the permit requirements, as needed, due to changes in applicable laws, guidance, and available technical information.

1. Facility Name and Mailing Address:
   Dominion-Bremo Power Station — SIC Code: 4911 – Electric Generation
   5000 Dominion Boulevard
   Glen Allen, Virginia 23060

   Location: 1038 Bremo Road, Bremo Bluff, Virginia 23022

2. Permit No. VA0004138 — Existing Permit Expiration Date: July 31, 2015

3. Owner Contact: Cathy C. Taylor — Title: Director, Electric Environmental Services
   Telephone No: (804) 273-2929 — Email: Cathy.c.taylor@dom.com

4. Application Complete Date: March 27, 2015
   Permit Drafted By: Beverley W. Carver — Date: October 23, 2015
   DEQ - Valley Regional Office

   Reviewed By: Brandon Kiracofe — Date: October 26, 2015

   Public Comment Period: October 30, 2015 to December 14, 2015

5. Receiving Stream Name: James River
   River Mile: 001 (175.89), 002 (176.11), 003/004 (175.44), 006 (175.69)
   Basin: James River (Middle) Subbasin: NA Section: 10 Class: III
   Special Standards: None Public Water Supply: No *
   Tidal Waters: No Impaired: Yes
   Watershed Name: VAC-H20R: James River/Bear Garden Creek/South Creek
   * Per VDH on January 27, 2015 - The nearest downstream raw water intake is proposed to be located 8.7 miles downstream of BPS. The name of the proposed waterworks is the James River Water Authority and the exact intake coordinates are to be determined.

6. Operator License Requirements per 9VAC25-31-200.C.: None

7. Reliability Class per 9VAC25-790: (Outfall 203-sewage treatment works): Class II (VDH concurrence received June 3, 2015)

8. Permit Characterization:
   ☑ Private ☐ Federal ☐ State ☐ POTW ☐ PVOTW
   ☐ Possible Interstate Effect ☐ Interim Limits in Other Document (attach copy of CSO)

9. Description of Wastewaters and Treatment Facilities: **APPENDIX A**
   Total Number of Outfalls = 5 external, 4 internal

10. Management of Sludge/Debris:

    a. Sewage sludge from the sewage treatment plant serving internal Outfall 203 at this facility is pumped and hauled to Moores Creek Regional STP (VA0025518) in Albemarle County for further treatment and disposal. The Sludge Management Plan (SMP) for the sewage treatment plant will be approved with this reissuance of the permit.

    b. Coal Fly Ash is currently stored in the following impoundments:

    - West Ash Pond – 17 acres; 290 acre-feet; 19 foot dam; volume estimated at 220,000 ft^3; has natural clay liner
    - North Ash Pond – 96 acres; 4300 acre-feet; 102 foot dam; has natural clay liner
    - East Ash Ponds – 10 acres; vegetated

    The permittee is currently working on submittals to address the long-term management of the ponds including closure pursuant to the Virginia Solid Waste Management Regulations and solid waste permit for closure/post-closure.

    c. Metals sludge is stored in the Metal Cleaning Waste Treatment Basin.

    d. River Intake Screen – A trash rack is located at the James River in front of the BPS cooling water intake structure. Leaves and debris are removed from the trash rack and hauled offsite.

    e. Traveling Screen Debris – Debris and spray water which is backwashed from the traveling screens located in the Screen House is directed to Internal Outfall 101 which ultimately discharges through Outfall 001.

11. Discharge Location and Receiving Waters Information: **APPENDIX B**

12. Antidegradation Review and Comments per 9VAC25-260-30: James River: Tier: 2

    The State Water Control Board's WQSs include an antidegradation policy (9VAC25-260-30) that must be applied to all permit actions. All state surface waters are provided one of three levels of antidegradation protection. For Tier 1 or existing use protection, existing uses of the water body and the water quality to protect these uses must be maintained. Tier 2 water bodies have water quality that is better than the water quality standards. Significant lowering of the water quality of Tier 2 waters is not allowed without an evaluation of the economic and social impacts. Tier 3 water bodies are exceptional waters and are so designated by regulatory amendment. The antidegradation policy prohibits new or expanded discharges into exceptional waters.

    The antidegradation review begins with a Tier determination. The James River in the immediate vicinity of the discharge is listed as impaired for PCBs in fish tissue. Impairment for PCBs in fish tissue is not applicable for designation as Tier 1. No other in-stream data are available that indicate water quality criteria (WQC) either have been violated or are barely met; therefore, the James River in the vicinity of the discharge is determined to be a Tier 2 water. Since the quality of Tier 2 waters is better than that required by the standards, no significant degradation of the existing quality will be allowed.

    Because there was a proposed expansion and/or change in nature of the discharge for the combined Outfall 002/004 evaluation, the combined dewatering activities, and the final configuration, antidegradation baselines were calculated for the process wastewater discharges from Outfalls 002, 003, 004, and 006. The antidegradation baselines are presented in the MSTRANTI spreadsheet that can be found in Appendix G. The baselines were calculated for all toxic parameters as not more than 25% of the unused assimilative capacity of the criteria for the protection of aquatic life (acute and chronic) and not more than 10% for the protection of human health. The unused assimilative capacity is defined as the difference between existing water quality and the criterion for a specific pollutant.

    Because there was no proposed expansion or change in the nature of the once-through condenser cooling water discharge, antidegradation baselines were not calculated for any toxic parameters at Outfall 001.

13. Site Inspection: Date(s): September 15, 2014 Performed by: Bev Carver and Laura Stuart
    May 5, 2015 Performed by: Bev Carver and Brandon Kiracofe

14. NPDES Permit Rating Worksheet: **APPENDIX A**
    The worksheet updated using current information regarding the facility.
    ☑ Major ☐ Minor Score = 600

15. Effluent Screening and Effluent Limitations: **APPENDIX C, D, E, F, and G**

16. Thermal Mixing Zone Evaluation: **APPENDIX H**

17. Cooling Water Intake Structure Evaluation: **APPENDIX I**

18. Effluent Toxicity Testing Requirements included per 9VAC25-31-220.D: ☑ Yes ☐ No **APPENDIX J**

19. Groundwater Monitoring Plan Evaluation: **APPENDIX K**

20. Permit Changes and Bases for Special Conditions: **APPENDIX L**

21. Material Storage per 9VAC25-31-280.B.2.: This proposed permit requires that the facility's O&M Manual include information to address the management of wastes, fluids, and pollutants which may be present at the facility, to avoid unauthorized discharge of such materials.

22. Antibacksliding Review per 9VAC25-31-220.L.: This permit complies with Antibacksliding provisions of the VPDES Permit Regulation.

23. Impaired Use Status Evaluation per 9VAC25-31-220.D: The James River in the immediate vicinity of the discharge is listed as impaired for "Fish Consumption" due to PCB contamination. No TMDL has been prepared or approved for the segment. The permit contains a re-opener condition that may allow the permit limits to be modified, in compliance with section 303(d)(4) of the Act once a TMDL is approved.

24. Regulation of Users per 9VAC25-31-280.B.9: N/A – There are no industrial users other than the owner contributing to the treatment works.

25. Stormwater Management per 9VAC25-31-120: Application Required? ☑ Yes ☐ No

    Steam electric power generating facilities are considered by definition in the VPDES Permit Regulation (9VAC25-31-10), to be engaging in industrial activity and are required to submit a stormwater application. The permittee submitted a Registration Statement for the VPDES General Permit for Stormwater Associated with Industrial Activity. Based on this information, stormwater requirements will be included in the individual permit.

26. Public Notice Information per 9VAC25-31-280.B:

    DEQ accepts comments by hand delivery, e-mail, fax or postal mail. All comments and requests must be in writing and be received by DEQ during the comment period. Submittals must include the names, mailing addresses and telephone numbers of the commenter/requester and of all persons represented by the commenter/requester.

    The Board will also accept written and oral comments at the public hearing. To make a statement at a public hearing, write your name on a sign-up sheet available before the hearing. You may sign up only for yourself. The time allowed for each statement is set by the hearing officer.

27. Variances/Alternate Limits or Conditions per 9VAC25-31-280.B, 100.H, and 100.M:

    Thermal Mixing Zone Evaluation – **APPENDIX H**

    Application Waivers
    The following application waivers were requested in the 2015 application:

Outfall	Form	Parameters	Justification for Requesting the Waiver
001	2C	24-hr composite samples, TRC	Flow through without treatment; therefore, grab samples are appropriate. Chlorine is not used and no biocides containing chlorine are used; therefore, TRC will not be monitored.
002	2C	24-hr composite samples	Retention time is > 24 hrs; therefore, grab samples are appropriate.
004	2C	All testing requirements	Essentially identical to Outfall 002 and testing for all Form 2C parameters are provided for Outfall 002.

    The above listed application waiver approach has been accepted in the past. The waivers are approved and will not affect the preparation of a technically defensible permit.

28. Closure Plans and Demonstration of Financial Capability per 9VAC25-650-10: N/A – This facility does not serve private residences.

29. Virginia Environmental Excellence Program (VEEP) Evaluation per § 10.1 – 1187.1-7: Is this facility considered by DEQ to be a participant in the Virginia Environmental Excellence Program in good standing at either the Exemplary Environmental Enterprise (E3) level or the Extraordinary Environmental Enterprise (E4) level?
    ☐Yes ☑ No

30. Nutrient Trading Regulation per 9VAC25-820:
    General Permit Required: ☐ Yes ☑ No

    This facility is not required to maintain coverage under the General Virginia Pollutant Discharge Elimination System (VPDES) Watershed Permit Regulation for Total Nitrogen (TN) and Total Phosphorus (TP) Discharges and Nutrient Trading in the Chesapeake Bay Watershed in Virginia (9VAC25-820) because it is not listed with a WLA in the Registration List in 9VAC25-820-70; nor does the permit authorize STP expansion that is subject to an offset or technology-based requirement.

31. Nutrient monitoring included per Guidance Memo No. 14-2011: ☑ Yes ☐ No

    This facility is a Nonsignificant Discharger (all facilities not classified as Significant Dischargers as defined in the Nutrient Trading Watershed General Permit Regulation 9VAC25-820). Effluent sampling for TN and TP has not previously been completed and therefore has been included in the permit for Outfall 002.

32. Threatened and Endangered (T&E) Species Screening per 9VAC25-260-20B.8: This facility was listed on the 2014 and 2015 VPDES Permit review request list. T&E screening was performed using the Department of Conservation and Recreation (DCR) Natural Heritage website. The coordination form included in the Memorandum of Understanding along with the T&E screening was sent to the US Fish and Wildlife Service (USFWS), Virginia Department of Game and Inland Fisheries (DGIF) and Department of Conservation and Recreation (DCR) on May 13, 2014. Because of the upcoming CWIS rule, DCR, DGIF and FWS chose to delay comment on the permit pending receipt of the Thermal Mixing Zone evaluation and permit reissuance application which was due on February 1, 2015. The VPDES permit application was received on January 15, 2015. Part 125.98(h) of the CWIS rule allows for a 60 day review of the application before a draft permit can be issued. The application was sent to DCR, DGIF, FWS and the National Marine Fisheries Office on January 27, 2015 so the 60

day application review period ended on March 27, 2015. Comments were received from DGIF on March 24, 2015 and were forwarded to the permittee. Comments from DCR were received on March 25, 2015 and were forwarded to the permittee.

Further discussion of the T&E process is included in **APPENDIX H (Thermal Mixing Zone Evaluation) and APPENDIX I (CWIS Evaluation)**.

33. Compliance Schedules per 9VAC25-31-250: None

34. Historical Record:

- Bremo Power Station was constructed in 1931 by the Virginia Public Service Company and has operated since 1944 under the Virginia Electric and Power Company (VEPCO).

- 1948 – A low water diversion wall in the James River was constructed and maintained under a permit originally issued by the Army Corps of Engineers.

- September 7-8, 1971 – SWCB staff conducted a Thermal Study at Bremo Power Station.

- October 1974 - Final Report – July 1972 – June 1974, "The Effects of Thermal Loading by the Bremo Power Station on a Piedmont Section of the James River, Volumes I and II", was prepared for Virginia Electric and Power Company by Virginia Institute for Scientific Research, Richmond, Virginia

- January 11, 1975 – VPDES Permit No. VA0004138 was first issued.

- January 22, 1975 – Heat rejection calculation method was approved.

- December 10, 1975 – Winter/Summer Thermal Evaluation was submitted by the permittee.

- November 19, 1976 – Proposed Thermal Mixing Zone was submitted by the permittee and reviewed by SWCB staff.

- March 24, 1977 – The thermal mixing zones for VEPCO's Bremo, Surry and Chesterfield Power Stations were approved by State Water Control Board Executive Approval No. 3205-S, 3206-S and 3207-S.

- December 29, 1977 – VEPCO questioned the need to monitor temperature of condenser cooling water where a mixing zone and a maximum heat rejection limit was included in the permit.

- May 23, 1978 – State Water Control Board Executive Secretary approved the staff's recommendation that no modifications to the thermal mixing zones were required as a result of the new revised water quality standard temperature standard.

- December 21, 1978 – VPDES Permit No. VA0004138 was modified to include the Board approved thermal mixing zone. The permit also required continuous monitoring for Outfall 001 (condenser cooling water) temperature and specified that the maximum heat rejected to the waterway shall not exceed a maximum of 1.62×10^{9} BTU/Hour.

- VPDES Permit No. VA0004138 was reissued on August 6, 2000.

- A Proposal for Information Collection (PIC) is required by 40 CFR Part 125.95(a)(1). The PIC must be submitted prior to data collection activities. A PIC was submitted on February 23, 2005 under a cover letter dated February 16, 2005. The PIC was reviewed and accepted by DEQ per letter dated July 29, 2005.

- June 23, 2006 – DEQ received complaints from participants in the James River Batteau Festival. The fleet entered the thermal mixing zone at Bremo Bluff on a day when the river water level was very low. When the occupants got out of their canoes to get around the rocks they experienced water that was hotter than what they would have expected to be allowed. In response, Dominion stated that in the future they will coordinate with the festival organizers to ensure that a passage on river right will be open if there is low water in the future during the festival.

- VPDES Permit No. VA0004138 was reissued on August 7, 2005.

- July 9, 2007, EPA publishes in the Federal Register the Suspension of Regulations Establishing Requirement for Cooling Water Intake Structures at Phase II Existing Facilities.

- Dominion requested a major permit modification on September 12, 2007 as follows:

  - "As you are aware, on July 9, 2007 EPA published in the Federal Register the Suspension of Regulations Establishing Requirement for Cooling Water Intake Structures at Phase II Existing Facilities. The entire rule was suspended (40 CFR Parts 122 and 125) except for the provision in 125.90(b) for developing best professional judgment controls on a case-by-case basis.

  - We understand that the rule suspension by EPA on July 9, 2007 effectively suspends the existing 316(b) special condition language, including the Comprehensive Demonstration Study (CDS) submittal deadline, in our VPDES permit for Bremo. Therefore, pursuant to 9VAC25-31-390 A.3.a.(2), Dominion requests modification of the above referenced permit to delete Part I.E. Special Condition # 15 on 316(b), and substitute the language previously agreed upon by Dominion and DEQ."

- VPDES Permit No. VA0004138 was modified on December 27, 2007. The rationale included in the basis for the modification was as follows:

  - Cooling Water Intake Structure. Substitution. The facility includes a cooling water intake structure governed by § 316(b) of the Clean Water Act which requires that the location, design, construction and capacity of the cooling water intake structures reflect the "best technology available for minimizing adverse environmental impact". The environmental report on impingement and entrainment studies conducted at the facility indicated minimal or no adverse environmental impact. The special condition requires continued compliance with § 316(b) and submittal of new data that was recently collected in response to EPA's Phase II requirements. Collected data and any changes to the intake structures or conditions will be reevaluated at each reissuance to monitor continued compliance with the requirement. The condition also includes a reopener, should further 316(b) related conditions become necessary once the EPA Phase II rule is finalized or a new BPJ determination is required.

- A Comprehensive Demonstration Study (CDS) was due by January 7, 2008 under the August 7, 2005 permit. The exact requirements are listed at 40 CFR Part 122.21(r)(2),(3) and (5), and in 40 CFR Part 125.95. A summary of the requirements can be found in DEQ Guidance Memo 05-2001 listed. The requirement to submit a CDS was removed during the December 27, 2007 permit modification.

- Part I.E.15 of VPDES Permit No. VA0004138 required that within one year of the modification date of the permit (by December 27, 2008) the permittee shall submit biological data collected consistent with that described in the February 16, 2005 Proposal for Information Collection. In a letter dated November 24, 2008 received on December 3, 2008, Dominion submitted a report entitled "Impingement Mortality Characterization Report – Bremo Power Station, June 2005 – May 2006". A copy of this report was submitted a second time in the permit reissuance application submitted in January 2010.

- May 27, 2009 – DEQ Recon Inspection Report – Coal Fly Ash Impoundments

- December 4, 2009 – A Memorandum of Agreement between VEPCO and Virginia Department of Game and Inland Fisheries was effective. The agreement provided for funding assistance over a 5 year period for DGIF's mussel restoration program.

- VPDES Permit No. VA0004138 expired on July 31, 2010. The permit was administratively continued due to issues with the Cooling Water Intake Structure special condition language. The issues were resolved and the permit was reissued on August 13, 2010.

- A revised Groundwater Monitoring Plan (GWMP) was submitted on August 13, 2011. DEQ approved the GWMP on September 11, 2013.

- Part I.E.13 of the 2010 permit required that the permittee conduct a Best Technology Available (BTA) assessment of the CWIS. A report was to be submitted to DEQ for approval by August 13, 2011. The report was submitted on August 11, 2011. No technology improvements were recommended by the report which was based upon the draft federal 316(b) regulation. The report was approved by DEQ on November 9, 2011.

- On September 19, 2013, DEQ received notification from the permittee that the use of coal had been discontinued at BPS. There was a period when no power was produced while the conversion from coal to natural gas was taking place.

- The start-up date for Unit 3 firing natural gas was March 12, 2014. The start-up date for Unit 4 firing natural gas was March 25, 2014.

- The coal pile was removed in 2014 and the area was seeded with grass.

- Federal Effluent Guidelines, 40 CFR Parts 122 and 125; NPDES Final Regulations to Establish Requirements for Cooling Water Intake Structures at Existing Facilities and Amend Requirements at Phase I Facilities became effective on October 14, 2014.

- December 11, 2014 – EPA Memorandum "Clean Water Act Section 316(b) Regulations for Cooling Water Intake Structures at Existing Facilities: NPDES Permitting Process When Federally-Listed Threatened and Endangered Species and/or Designated Critical Habitat Are or May be Present" form Deborah G. Nagle, Director, Water Permits Division.

- The permit reissuance application was received on January 15, 2015.

- The Draft Impingement Characterization Study Plan was prepared by HDR Engineering, Inc. on April 10, 2015.

- VPDES Permit No. VA0004138 expired on July 31, 2015. The permit was administratively continued.

- A Notice of Planned Changes was originally submitted by letter dated August 6, 2015. Revision 01 of the Notice of Planned Changes was submitted by letter dated August 26, 2015. The final Revision 02 of the Notice of Planned Changes was submitted by letter dated September 1, 2015 and was approved by DEQ by letter dated September 3, 2015.

- A permit application addendum dated August 6, 2015 was received on August 12, 2015.

- By letter dated October 5, 2015, DEQ was notified of mechanical dredging and sampling location changes associated with the ash pond closure. The sampling location changes are associated with the Notice of Planned Changes which was approved on September 3, 2015. Copies of the updated O&M Manual and SWPPP were provided.

- A revised application addendum was received on October 7, 2015.

- Federal Effluent Guidelines, 40 CFR Parts 257 and 261; Disposal of Coal Combustion Residuals from Electric Utilities; Final Rule was promulgated on December 19, 2014 and became effective on October 14, 2015

- Federal Effluent Guidelines, 40 CFR Part 423; Steam Electric Power Generating Point Source Categories; Final Rule was promulgated on September 30, 2015 and becomes effective on November 29, 2015.

- By email dated October 20, 2015, DEQ was notified that the practice of sluicing coal ash from the West Ash Pond to the North Ash Pond ceased on October 17, 2015.

- By email dated October 20, 2015, DEQ was notified that the discharge from the Stormwater Management Pond was scheduled to be routed directly to Outfall 002 on October 22, 2015, bypassing the West Ash Pond.

APPENDIX A

DESCRIPTION OF WASTEWATERS AND TREATMENT FACILITIES

OUTFALL OVERVIEW:

BPS currently has 5 external outfalls which discharge to the James River. During closure activities for the North Ash Pond and the East Ash Ponds, Outfalls 004 and 003 will be retired and two new stormwater outfalls (Outfalls 007 and 008) will be constructed. The outfalls in order from the most upstream to most downstream are:

Outfall 002 (West Ash Pond) – The West Ash Pond currently receives wastewater from 3 internal outfalls:

- Internal Outfall 202 (Metal Cleaning Waste Treatment Basin)
- Internal Outfall 203 (Sewage Treatment Plant)
- Internal Outfall 204 (Stormwater Management Pond)

Outfall 001 (Once-Through Condenser Cooling Water) – receives wastewater from 1 internal outfall:

- Internal Outfall 101 (Traveling Screen Backwash)

Outfall 006 (Stormwater)

Outfall 004 (North Ash Pond) *

Outfall 003 (East Ash Pond)(Stormwater) *

* Outfall 004 discharges to a drainage ditch between the C&O railroad and BPS. Approximately 200 feet downstream, Outfall 003 discharges to the same drainage ditch. At this point Outfall 004 and 003 are comingled along with some stormwater from offsite. There is a brick arch culvert running under the railroad tracks to convey the combined discharges to the James River.

Pursuant to EPA's final coal combustion residuals rule promulgated on April 17, 2015, Dominion is pursuing closure of the ash ponds at BPS. To date, pre-closure activities have included the movement of ash from the West Ash Pond to the North Ash Pond as authorized under the previous permit, as well as the pumping of comingled decant water, dewatering water and stormwater from the West Ash Pond to the North Ash Pond. In order to begin closure of the existing ash ponds, all water must be discharged from the West Ash Pond, North Ash Pond, and East Ash Ponds. The discharges from the West Ash Pond, North Ash Pond, and East Ash Ponds during the dewatering activities must meet the limits established in Part I.A.9 of the permit which may require the use of interim treatment systems.

Diagram of Existing Conditions

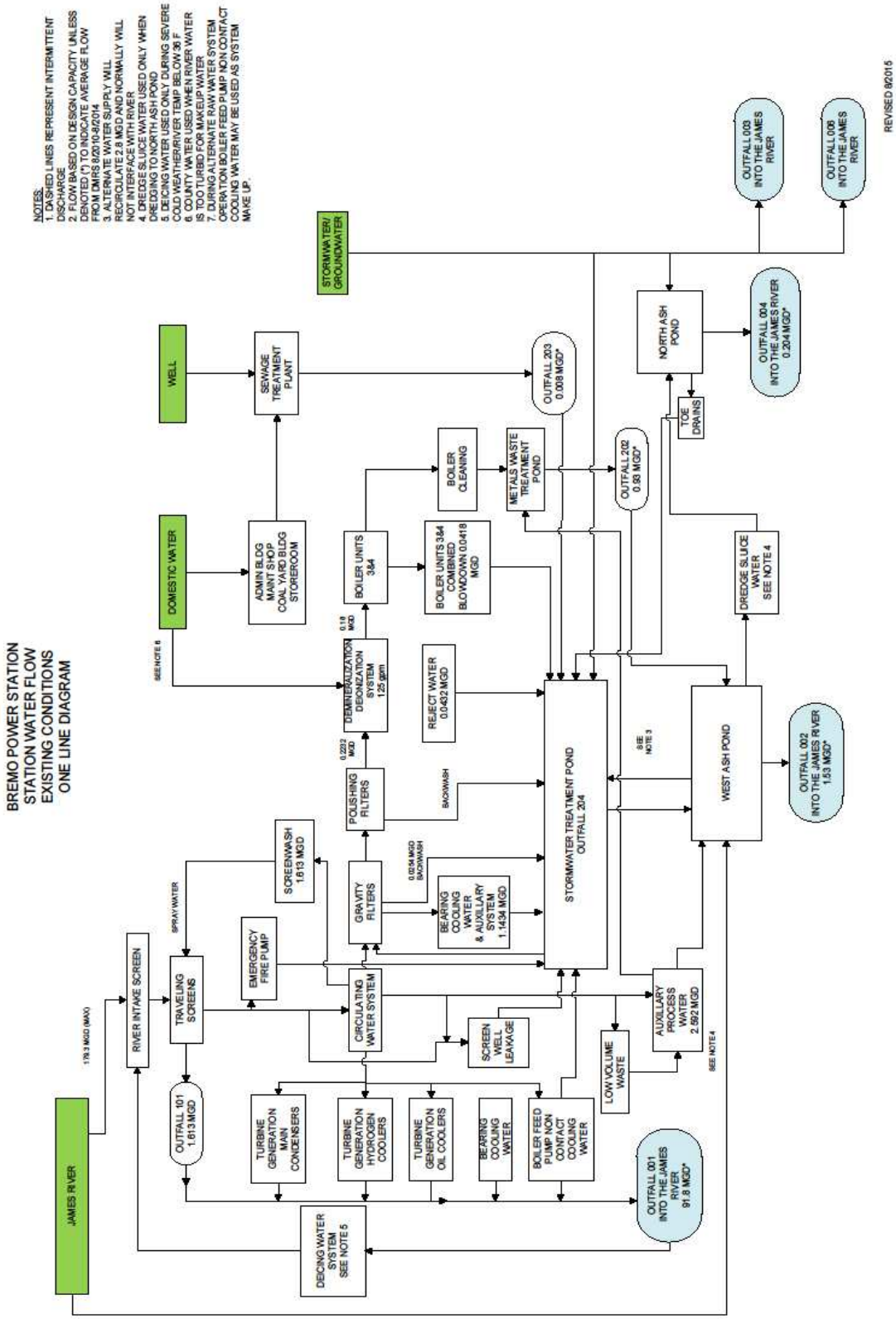

Currently Retired Outfalls:
Outfall 005 – The Intake Screen Backwash was at one time discharged to the James River through Outfall 005. Outfall 005 was retired prior to 2005 when the traveling screen backwash flow was redirected to Outfall 001. The traveling screen backwash is now permitted as Internal Outfall 101 discharging through Outfall 001.

I**nternal Outfall 204 (Stormwater Management Pond)** – Internal Outfall 204 currently discharges to the West Ash Pond ultimately discharging through Outfall 002. The previous permit contained limits for coal pile runoff at Outfall 204. Since the coal pile has been eliminated, monitoring at Outfall 204 is no longer required; therefore Outfall 204 has been retired at this reissuance.

Outfalls That Will Be Retired:
Outfall 004 (North Ash Pond) – The North Ash Pond contains a Discharge Structure with stop logs to control the rate of discharge. The discharge pipe from the North Ash Pond runs underneath the inactive East Ash Pond to the Outfall 004 monitoring location. When the North Ash Pond and East Ash Ponds are being dewatered, the permit allows discharge through Outfall 004. The North Ash Pond discharge structure will ultimately be dismantled and Outfall 004 will be retired.

Outfall 003 (Inactive East Ash Ponds) – The East Ash Ponds were previously closed in the 1980s before modern closure requirements were in place. The East Ash Ponds have a Discharge Structure which directs onsite and offsite stormwater through Outfall 003. Outfall 003 is currently classified as a stormwater outfall not exposed to industrial activity; therefore, Outfall 003 does not require any monitoring. When the North Ash Pond and East Ash Ponds are being dewatered, the permit allows discharge through Outfall 003. Once the dewatering activities are completed, toe drains will be constructed to direct any seepage from the East Ash Ponds to the Stormwater Management Pond. The East Ash Ponds discharge structure will ultimately be dismantled and Outfall 003 will be retired.

Internal Outfall 202 (Metal Cleaning Waste Treatment Basin) – Internal Outfall 202 for the Metal Cleaning Waste Treatment Basin currently discharges to the West Ash Pond. The permittee will be closing the Metal Cleaning Waste Treatment Basin during the term of the permit reissuance. As a result, internal Outfall 202 for the Metal Cleaning Waste Treatment Basin will be retired.

New Outfalls:

Outfalls 007 and 008 – Once closure of the North Ash Pond and East Ash Ponds is complete, new stormwater drainage systems will be created. Stormwater not exposed to industrial activity will be directed through two new outfalls (Outfalls 007 and 008) which will ultimately discharge to the James River in the same vicinity as the previously used Outfalls 003 and 004 did.

Internal Outfalls 501, 502, 503, 504, and 505 – The dewatering wastewaters are to be managed to address the monitoring and effluent limitations established. The management of the dewatering wastewaters may include the use of interim treatment systems. The internal outfalls are designated as follows:

Outfall 501 - process wastewater from dewatering activities in the West Ash Pond
Outfall 502 - process wastewater from dewatering activities in the North Ash Pond
Outfall 503 - process wastewater from dewatering activities in the East Ash Ponds
Outfall 504 - combination of process wastewaters from dewatering activities in the North Ash Pond and the East Ash Ponds
Outfall 505 - process wastewater from dewatering activities in the Metal Cleaning Waste Treatment Basin

It is staff's best professional judgment that the effluent limits be applied to the discharges of dewatering wastewaters (Internal Outfalls 501, 502, 503, 504, and 505) rather than being applied at Outfalls 002, 003, 004, and 006. Meeting effluent limits at the internal outfalls will protect and maintain water quality at any of the outfalls identified as discharge options, while providing Dominion with the flexibility needed to achieve closure by the required deadline.

PICTURES OF OUTFALLS FROM FILE RECORD:

<table>
<tr>
<td>

Outfall 002 (West Ash Pond) sampling location; There is a Decant Structure with stop logs to control the water level in the pond.</td>
<td>

Internal Outfall 202 (Metal Cleaning Waste Treatment Basin); This outfall rarely discharges. If needed, a pump is used to pump wastewater from the Metal Cleaning Waste Treatment Basin to the West Ash Pond.</td>
</tr>
<tr>
<td>

Internal Outfall 203 (Sewage Treatment Plant)</td>
<td> 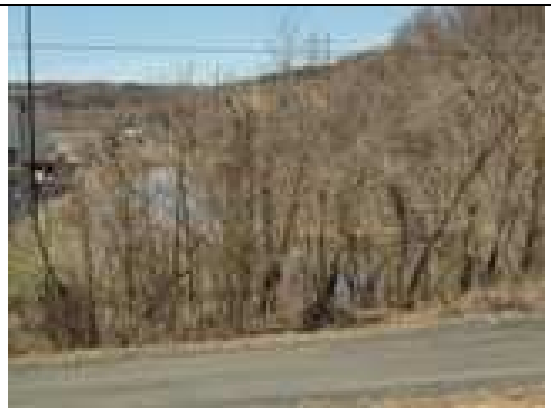

Stormwater Treatment Pond (formerly permitted as internal Outfall 204)</td>
</tr>
<tr>
<td>

Outfall 001 (Once-Through Condenser Cooling Water)</td>
<td>

Outfall 001</td>
</tr>
</table>

 Outfall 006 stormwater drainage; The flood wall is on the left. On the right is the railroad tracks. James River is on other side of railroad tracks.	 North Ash Pond; contains a concrete Decant Structure with stop logs to control pond water level.
 North Ash Pond dam	 Outfall 004 (North Ash Pond); The Outfall 004 pipe runs under the East Ash Pond and discharges into a polishing pond (in the background). From the polishing pond, the discharges goes to a concrete basin with a weir.
 Outfall 004 North Ash Pond sampling point. The Outfall 004 discharge forms the headwaters of a drainage ditch running beside the railroad tracks which also receives the discharge from Outfall 003.	 Western toe drain outlet for North Ash Pond. Dye testing in 2010 indicated that toe drain flow was routed to the stormwater treatment pond.

 Eastern toe drain outlets for North Ash Pond. Dye testing in 2010 indicated that toe drain flow was routed to the stormwater treatment pond.	 Outfall 003 Decant Structure (East Ash Ponds). East Ash Pond #3 is in the background.
 East Ash Pond #1 is on the right. East Ash Pond #2 is to the left of East Ash Pond #1. The discharge pipe for Outfall 004 runs underneath East Ash Pond #2.	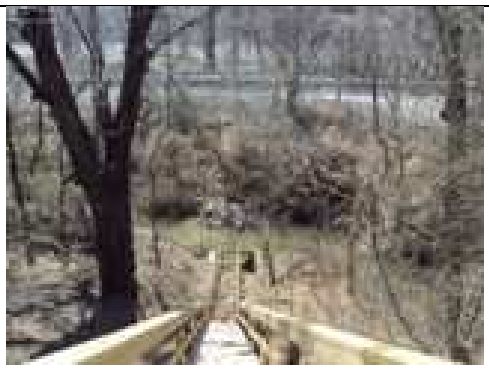 Outfall 003. There is a box with a weir at the bottom of the steps for sampling. The discharge enters a drainage ditch running beside the railroad tracks where it comingles with the Outfall 004 discharge. James River is in the background behind the railroad tracks.

DESCRIPTION OF OUTFALLS AND TREATMENT:

OUTFALL 002 – WEST ASH POND
The West Ash Pond was placed into service in 1976. The surface is approximately 17.0 acres.

The discharge from the West Ash Pond was previously discharged to the James River through Outfall 002. Any discharge from the West Ash Pond to an external outfall must meet the requirements in Part I.A.9 of the permit.

The West Ash Pond currently receives wastewater from the following 3 sources:

- **Auxiliary Process Water**

- **Internal Outfall 202 – Metal Cleaning Waste Treatment Basin -** The Metal Cleaning Waste Treatment Basin is not lined. The basin receives metals cleaning waste generated from the cleaning of metal process equipment. Following treatment, which consists of pH adjustment and settling, the wastewaters are pumped to the West Ash Pond through Outfall 202. The basin was designed to hold 5,700,000 gallons of chemical and non-chemical metal cleaning wastewater.

    - The Metal Cleaning Waste Treatment Basin has an intermittent discharge. Prior to the conversion from coal to natural gas, the discharge occurred 2 to 3 times per year for 1 day per event. The basin is no longer used as originally designed. Water flow to the basin is minimized. In 2014, there was no discharge from the basin.

- **Internal Outfall 204 – Stormwater Management Pond (also known as the "Froggy Pond") -** The 2010 permit included Internal Outfall 204 as a monitoring location because the coal pile runoff was directed to this pond. Coal has been removed from the facility so monitoring is no longer required at internal Outfall 204.

  The Stormwater Management Pond receives wastewater from the following sources:

  - Internal Outfall 203 – Sewage Treatment Plant (STP) - The design flow of the STP is 0.0432 MGD.
  - Boiler Blowdown – Units 3 & 4
  - Water Purification System
  - Floor drains/Bearing Cooling Water
  - Stormwater runoff
  - Toe drain flow from North Ash Pond
  - Toe drain flow from the East Ash Ponds will be directed to the Stormwater Management Pond in the future
  - Treated dewatering water may be directed to the Stormwater Management Pond in the future.

Major modifications to the West Ash Pond are planned during the upcoming permit term as a result of the 2014 Coal Combustion Residuals (CCR) Rule.

The Metal Cleaning Waste Treatment Basin will be closed and the West Ash Pond will be clean closed (all ash removed) and a portion of the pond will be lined and repurposed as the West Treatment Pond.

OUTFALL 001 – ONCE-THROUGH CONDENSER COOLING WATER

There are 2 sources of wastewater comprising Outfall 001:

- Once-Through Condenser Cooling Water - Water is withdrawn from the James River through two adjacent cooling water intake structures (CWISs), one for each generating unit. The CWISs are located 250 feet upstream of Outfall 001. The cooling water is neither chlorinated nor chemically altered by the addition of biocides, corrosion inhibitors, or other cooling water treatment additives. There are no cooling towers at BPS, and the heated discharge enters a tunnel leading underneath the railroad tracks to the Outfall 001 discharge to the James River. When in operation, the discharge is continuous.

- Internal Outfall 101 – Traveling Screen Backwash Water - Water withdrawn from the James River through the BPS cooling water intake structure is directed to the Screen House where the traveling screens are located. The traveling screens are backwashed to remove debris and/or fish. The spray water and debris/fish are discharged through internal Outfall 101 into the tunnel running underneath the railroad tracks which carries the Outfall 001 discharge to the James River. The Outfall 101 discharge is a continuous non-process waste stream. No chemicals are used and there is no chemical cleaning.

DESCRIPTION OF DEICING WATER SYSTEM:

An intake trash rack is located at the cooling water intake structure. The trash rack extends across the entire length of both intake structures and prevents debris and ice from entering the screen house.

There are two 5,000 gpm pumps located at Outfall 001discharge. The pumps are elevated to prevent damage during flood conditions. During extremely cold periods of the year (river water temperatures below 36° F) approximately 10,000 gpm of the heated Outfall 001 effluent is pumped back to the station's cooling water intake structure and is sprayed on the intake trash rack to prevent accumulation of ice. This is approximately 8.6% of the total cooling water flow (116,000 gpm) for Units 3 and 4.

The thermal mixing zone begins at the John H. Cocke Memorial Bridge (River Mile 176.63) which is 0.74 river miles upstream of Outfall 001(River Mile 175.89); therefore, the practice of spraying the heated water from Outfall 001 on the upstream CWIS is contained within the defined thermal mixing zone.

A detailed description of the Outfall 001 tunnel, Screen House and Cooling Water Intake Structure and intake trash rack and deicing water system is contained in Appendix I.

OUTFALL 006

Outfall 006 is currently classified as a stormwater outfall not exposed to industrial activity. The Outfall 006 drainage area consists of a grassy area of approximately 5.3 acres south of the flood wall but north of the primary railway (old Kanawha canal). The ash sluice lines and lime slurry line from the lime tank run through this drainage area to the West Ash Pond. Also located in this drainage area is the intake screen return line. Stormwater drains through this grassy area where there are no industrial activities and discharges directly into the James River.

During the closure activities, Outfall 006 will be authorized for use to discharge treated dewatering water that will be generated during closure activities. During this time there will be permit limits and monitoring requirements at Outfall 006.

Once the closure activities are completed, Outfall 006 will return to its original classification as a stormwater outfall not exposed to industrial activity.

<u>OUTFALL 003 – EAST ASH PONDS</u>

Outfall 003 is currently classified as a stormwater outfall not exposed to industrial activity. The Outfall 003 drainage area includes the most southeastern portion of the property and includes drainage south of the North Ash Pond and around the eastern and southern portion of the closed East Ash Ponds. The estimated drainage area is 27.15 acres.

The Outfall 003 decant structure was constructed for the East Ash ponds. Outfall 003 discharges continuously apparently from ground water contributions.

The East Ash Ponds include 3 distinct sections:

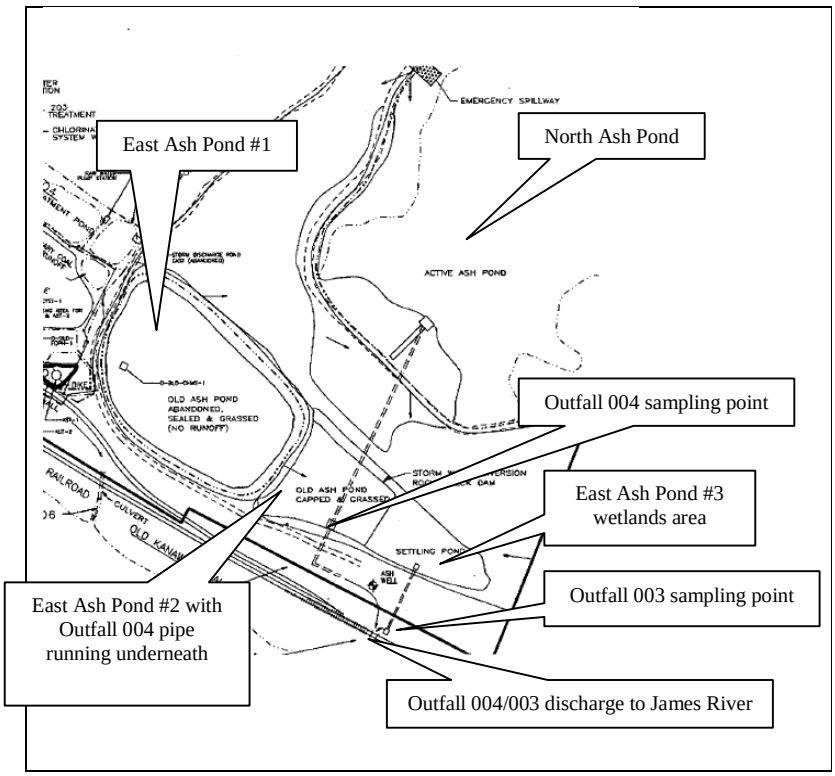

- East Ash Pond #1 – surface area approximately 10 acres, volume or mass undetermined. In service 1949 to 1976, 1981 to December 1983. No records regarding close-out process. Closed with clay cap; Currently covered with grass, vegetatively stabilized.

- East Ash Pond #2 – east and adjacent to East Ash Pond #1; a pipe runs under the East Ash Pond from the North Ash Pond conveying the Outfall 004 wastewater.

- East Ash Pond #3 – the most eastern pond which is submerged with 90% coverage with wetlands vegetation. The decant structure for the East Ash Ponds is located here.

The East Ash Ponds were previously closed in the 1980s before modern closure requirements were in place. In response to the 2014 Coal Combustion Residuals Rule, all 3 of the East Ash Ponds will be closed using a modern cap.

During the closure activities, Outfall 003 will be authorized for use to discharge dewatering water that will be generated during closure activities. During this time there will be permit limits and monitoring requirements for Outfall 003. No discharge from the East Ash Ponds to an external outfall may occur until the limits in Part I.A.9 of the permit become effective.

The East Ash Ponds discharge structure will ultimately be dismantled and Outfall 003 will be retired.

OUTFALL 004 – NORTH ASH POND

The North Ash Pond was placed into service in 1984. The North Ash Pond is 96 acres, 4300 acre-feet; 102 foot dam, average 45 feet deep. The North Ash Pond has an earthen berm, and no constructed liner (only clay naturally present). After settling, wastewater discharges from the North Ash Pond through a decant tower with stop logs to control the pond level. A discharge pipe running underneath the inactive East Ash Pond delivers the effluent to a polishing pond with a baffled stilling well and stand pipe. This structure discharges to a Concrete Basin with a 90 degree V notch weir. The permit sampling point for the North Ash Pond (Outfall 004) is collected from the discharge flow over the V notch weir.

The Outfall 004 discharge forms the headwaters of a drainage ditch and is comingled with the Outfall 003 discharge. There is a brick arch culvert running underneath the railroad tracks to deliver the comingled 003/004 discharge to the James River.

The North Ash Pond receives the following sources of wastewater:

- Stormwater runoff
- Ash dredged from West Ash Pond until October 14, 2015

The ash dredged from the West Ash Pond is stored in the North Ash Pond, which is designed to store ash for the life of the plant. The North Ash Pond discharges to the James River via Outfall 004. Effluent water quality is maintained by providing adequate retention time to settle solids.

Because wastewater from Outfall 002 is used to hydraulically transport ash from Outfall 002 to Outfall 004, these two outfalls are considered substantially identical.

The North Ash Pond will be closed during the term of the reissued permit. During the closure activities, Outfall 004 will be authorized for use to discharge dewatering water that will be generated during closure activities. During this time there will be permit limits and monitoring requirements for Outfall 004. Any discharge from the North Ash Pond to an external outfall must meet the requirements in Part I.A.9 of the permit.

The North Ash Pond discharge structure will ultimately be dismantled and Outfall 004 will be retired.

INTERNAL OUTFALLS 501, 502, 503, 504, AND 505

The dewatering wastewaters are to be managed to address the monitoring and effluent limitations established. The management of the dewatering wastewaters may include the use of interim treatment systems. The internal outfalls are designated as follows:

Outfall 501 - process wastewater from dewatering activities in the West Ash Pond
Outfall 502 - process wastewater from dewatering activities in the North Ash Pond
Outfall 503 - process wastewater from dewatering activities in the East Ash Ponds
Outfall 504 - combination of process wastewaters from dewatering activities in the North Ash Pond and the East Ash Ponds
Outfall 505 - process wastewater from dewatering activities in the Metal Cleaning Waste Treatment Basin

<u>Diagram of Final Configuration Conditions</u>

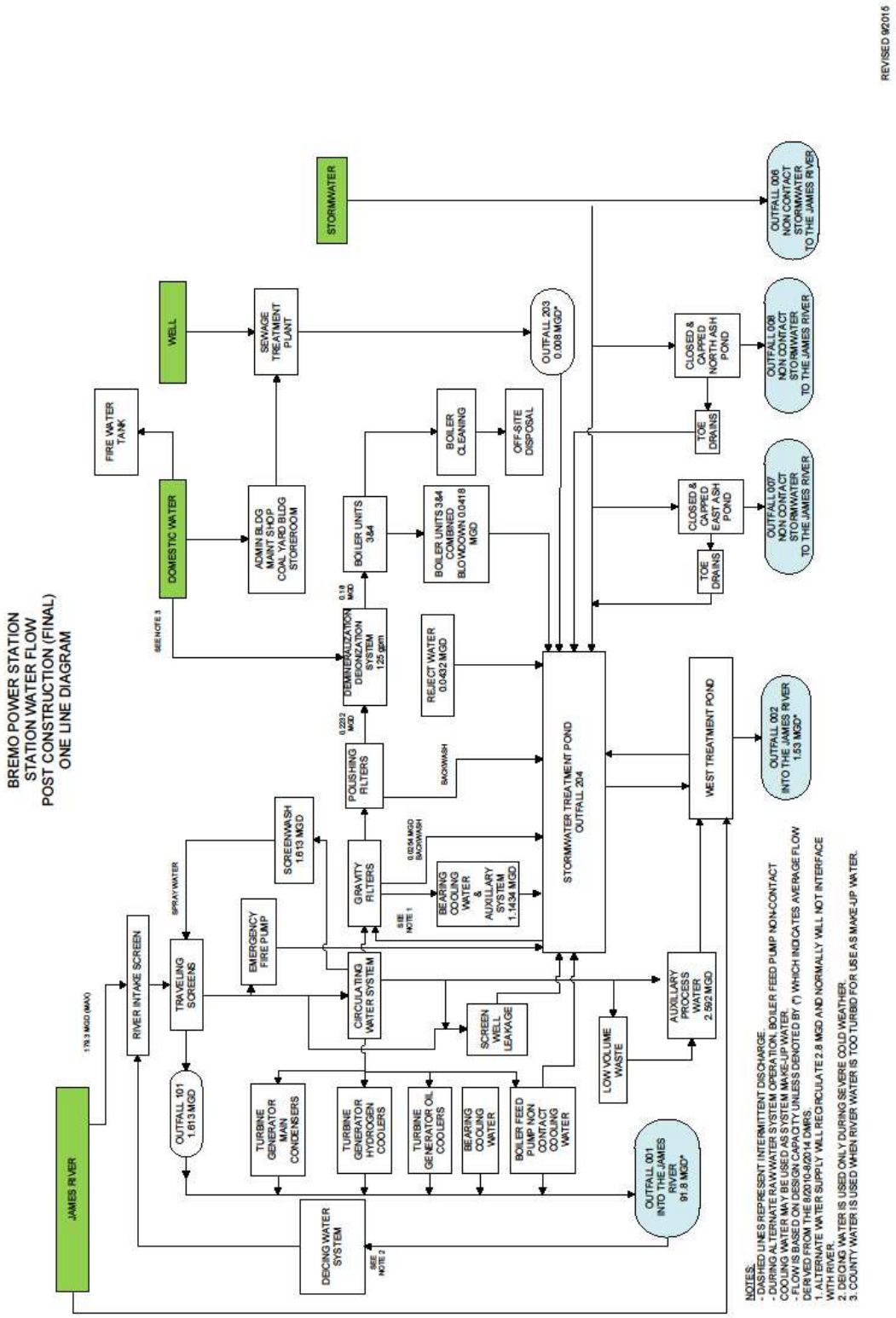

VPDES PERMIT RATING WORK SHEET

[ ] Regular Addition
[ ] Discretionary Addition
[ ] Score change, but no status change
[X] No change in score from previous fact sheet

NPDES NO. **VA0004138**

Facility Name: **Dominion-Bremo Power Station**

City: **Bremo Bluff**, **VA**

Receiving Water: **James River**
Reach Number:

Is this facility a steam electric power plant (SIC=4911) with one or more of the following characteristics?

1. Power output 500 MW or greater (not using a cooling pond/lake)
2. A nuclear power plant
3. Cooling water discharge greater than 25% of the receiving stream's 7Q10 flow rate

[X] YES; score is 600 (stop here) [ ] NO (continue)

Is this permit for a municipal separate storm sewer serving a population greater than 100,000?

[ ] YES; score is 700 (stop here)
[X] NO (continue)

SCORE SUMMARY

Factor	Description	Total Points
1	Toxic Pollutant Potential	**NA**
2	Flows/Stream Flow Volume	**NA**
3	Conventional Pollutants	**NA**
4	Public Health Impacts	**NA**
5	Water Quality Factors	**NA**
6	Proximity to Near Coastal Waters	**NA**
	TOTAL (Factors 1-6)	**NA**

S1. Is the total score equal to or greater than 80? [X] Yes (Facility is a major) [ ] No

S2. If the answer to the above questions is no, would you like this facility to be discretionary major?

[ ] No

[ ] Yes (Add 500 points to the above score and provide reason below:

New Score: **600**

Old Score: **600**

APPENDIX B

DISCHARGE LOCATION AND RECEIVING WATERS INFORMATION

BPS discharges to the James River just downstream from the community of Bremo Bluff in Fluvanna County.

Directly across the James River from BPS is the Dominion-Bear Garden Power Station which is authorized to discharge via VPDES Permit No. VA0090891. The Bear Garden permit has been developed for a 580 megawatt (MW) fossil fuel powered (Natural Gas with Oil Backup) steam electric generating power station.

The first map indicates the locations of the existing Outfalls 002, 101, 001, 202, 203,204, 006, 003, and 004.

During the closure process for the inactive East Ash Pond and North Ash Pond, Outfall 003 (East Ash Pond) and Outfall 004 (North Ash Pond) will be retired.

The second map indicates the outfall locations in the final configuration. This includes the addition of Outfalls 007 and 008 and the removal of Outfalls 003 and 004.

The third map indicates the locations of some other features that were not shown on the first and second maps including:

- Location of Dominion Bear Garden Power Station (VA0090891) Outfall 001
- Location of the BPS Intake in relation to Outfalls 001 and 002
- Location of ECTI Intake across the James River from the BPS Intake
- Upstream ambient monitoring station at John H. Cocke Bridge

Relevant points of interest within the watershed of James River and in the vicinity of the subject discharge are shown on the Water Quality Assessments TMDL Review for the Middle James River Basin found on page 5 of this appendix.

A Flow Frequency Determination for James River, at the discharge point was provided by memo updated October 2, 2015. The flow frequencies are presented on pages 6 through 11 of this appendix.

Mixing zone analyses at the point of discharge per DEQ's mixing program (MIX.EXE) and are included on pages 12 to 15 of this appendix.

Outfall Location Map – Existing Outfalls

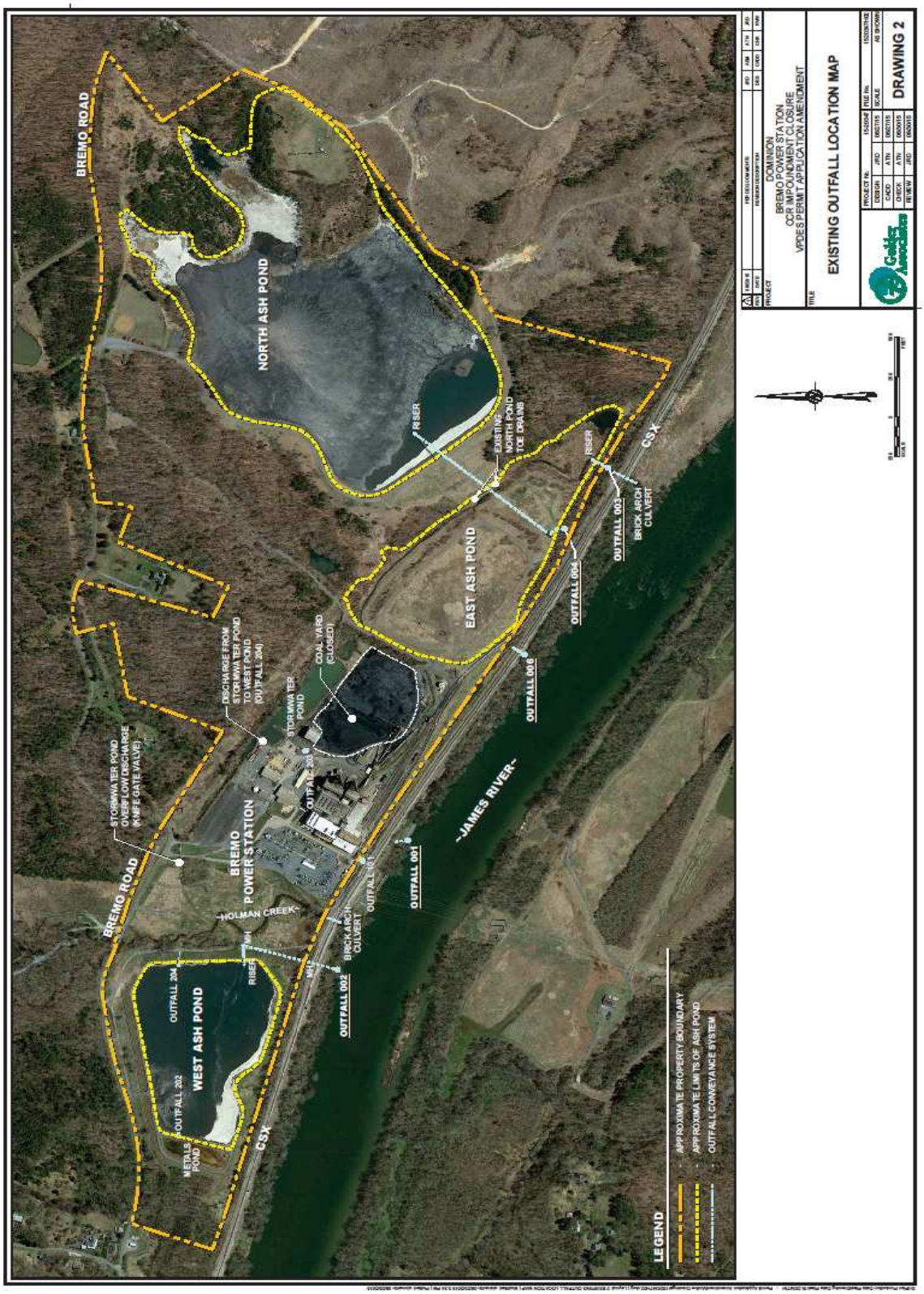

Outfall Location Map – Final Configuration Outfalls

<u>Map of other features in relation to BPS outfalls</u>

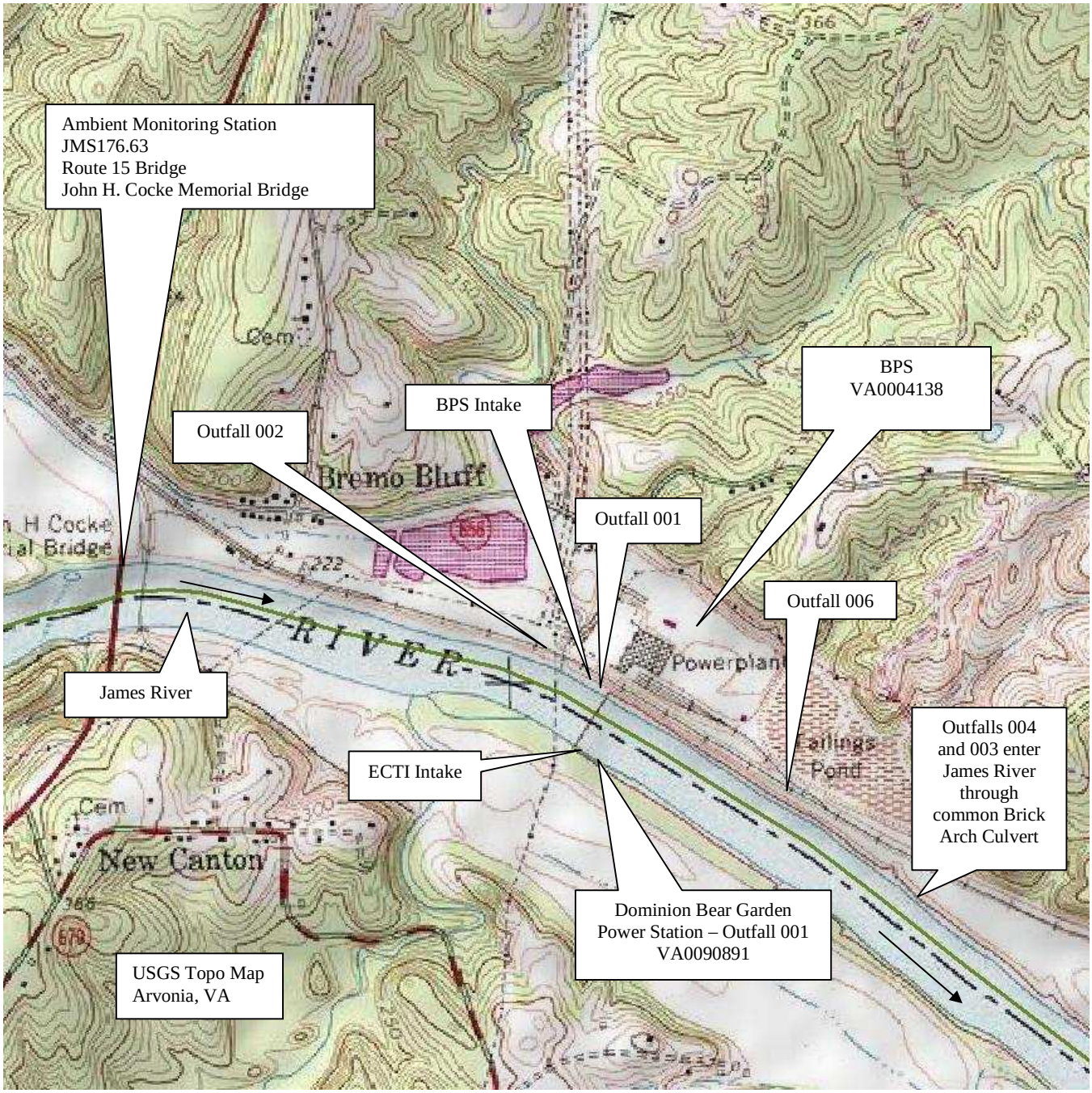

WATER QUALITY ASSESSMENTS REVIEW
MIDDLE JAMES RIVER BASIN
1/28/2015

IMPAIRED SEGMENTS

SEGMENT ID	STREAM	SEGMENT START	SEGMENT END	SEGMENT LENGTH	PARAMETER
H03R-04-PCB	James River	233.49	159.02	74.47	PCB in Fish Tissue
H20R-01-BAC	Bear Garden Creek	9.18	0.00	9.18	Fecal Coliform
H20R-02-BEN	North Creek	3.95	.70	3.25	Benthic

PERMITS

PERMIT	FACILITY	STREAM	RIVER MILE	LAT	LONG	WBID
VA0004138	**Dominion - Bremo Power Station-001**	**James River**	**175.89**	**374230**	**0781721**	**VAC-H20R**
VA0004138	**Dominion - Bremo Power Station-002**	**James River**	**176.11**	**374232**	**0781727**	**VAC-H20R**
VA0004138	**Dominion - Bremo Power Station-004/003**	**James River**	**175.44**	**374215**	**0781743**	**VAC-H20R**
VA0004138	**Dominion - Bremo Power Station-006**	**James River**	**175.69**	**374221**	**0781704**	**VAC-H20R**
VA0024147	Fork Union Military Academy	North Creek	3.52	374527	0781501	VAC-H20R
VA0057606	Omohundro Well WTP	Martin Creek X Trib	0.39	374621	0781739	VAV-H31R
VA0081639	Envoy at the Village	North Creek X-Trib	0.6	374528	0781540	VAC-H20R
VA0089559	Morris Well WTP	Martins Creek X-Trib	0.47	374654	0781621	VAV-H31R

MONITORING STATIONS

STREAM	NAME	RIVER MILE	RECORD	LAT	LONG
James River	2-JMS176.63	176.63	9/23/99	374416	0781809
Rivanna River	2-RVN001.64	1.64	03/24/70	374550	0781106
North Creek	2-NOR003.50	3.5	6/20/00	374527	0781501
Unnamed Tributary of Nort	2-XXN000.02	0.02	6/20/00	374528	0781021
Able Creek	2-ABL001.40	1.4	7/2003	374810	0781432
Rivanna River	2-RVN001.55	1.55	5/13/04	374546	0781105
North Creek	2-NOR000.20	0.02	6/2/99	374443	0781223
North Creek	2-NOR003.28	3.28	6/2/99	374527	0781458
North Creek	2-NOR003.59	3.59	6/20/00	374525	0781502

PUBLIC WATER SUPPLY INTAKES

OWNER	STREAM	RIVER MILE

WATER QUALITY MANAGEMENT PLANNING REGULATION

Is this discharge addressed in the WQMP regulation? **No**

If Yes, what effluent limitations or restrictions does the WQMP regulation impose on this discharge?

PARAMETER	ALLOCATION

WATERSHED NAME

VAC-H20R James River/Bear Garden Creek/South Creek

FLOW FREQUENCY DETERMINATION:
The 2016 permit will include the following external outfalls in order from the most upstream outfall to most downstream outfall; 002, 001, 006, 003/004 and 007/008 to the James River near Bremo Bluff, VA. During the closure activities, Outfalls 003 and 004 will be retired.

Stream flow frequencies are required at Outfalls 001, 002, 003, 004 and 006 in developing effluent limitations for the VPDES permit reissuance. Outfall 002 is upstream of all other discharges and intakes at this facility. Outfall 001 is located 0.22 river miles downstream of Outfall 002. Outfall 004 is 0.45 river miles downstream of Outfall 001. Outfall 006 is between Outfalls 002 and 004.

The annual average flow data are no longer provided in the gaging statistics normally used to make flow frequency determinations; therefore, the annual average flows presented below were obtained from the March 17, 2005 Flow Frequency Determination for this facility. The annual average flows are included to aid in the discussion of the entrainment requirements for the Cooling Water Intake Structure (CWIS) used by the facility.

A summary of the gages used in the FFD are listed below. The USGS gage on the James River at Scottsville, Virginia is located approximately 13 miles upstream of the Bremo Power Station. The Hardware and Slate Rivers are two tributaries that flow into the James River between the Scottsville gage and BPS.

USGS Gage Number	USGS Name	Statistical Period	Location
02029000	James River at Scottsville, VA	4/1/1980* – 3/31/2014	Albemarle County
02030000	Hardware River below Briery Run near Scottsville, VA	4/1/1939 – 3/31/2014	Fluvanna County upstream from the SR 637 bridge
02030500	Slate River near Arvonia, VA	4/1/1926 – 3/31/2014	Buckingham County upstream from Route 676 bridge

* The USGS has operated a continuous record gage on the James River at Scottsville, VA (#02029000) since 1928. Flow regulation from Lake Moomaw/Gathright Dam began in December 1979 and affects the flow in the James River. Due to this, the statistical period of record utilized in calculating the flow frequency values at this gage was limited to 1980-2003. By doing this, fluctuations in river flow due to releases from Gathright Dam are taken into account.

The flow frequencies for the James River at Scottsville gage is presented below:

James River at Scottsville, VA (#02029000):
Drainage Area = 4581 mi^2

1Q30 =	485 cfs	30Q5 =	820 cfs
1Q10 =	540 cfs	Harmonic Mean =	2310 cfs
7Q10 =	613 cfs	Annual Average =	5357 cfs
30Q10 =	742 cfs		

The flows contributed by the Hardware River and Slate River were determined by projecting the flow at the respective gage to the mouth, where each river meets the James River. This was done by drainage area comparison. The flow frequencies are presented below:

Hardware River below Briery Run, near Scottsville, VA (#02030000):
Drainage Area = 116 mi^2

1Q30 =	1.32 cfs	30Q5 =	12.5 cfs
1Q10 =	3.97 cfs	Harmonic Mean =	14.5 cfs
7Q10 =	3.58 cfs	Annual Average =	129 cfs
30Q10 =	6.70 cfs		

Hardware River at mouth:
Drainage Area = 138 mi^2

1Q30 =	1.57 cfs	30Q5 =	14.9 cfs
1Q10 =	4.72 cfs	Harmonic Mean =	17.2 cfs
7Q10 =	4.26 cfs	Annual Average =	153 cfs
30Q10 =	7.97 cfs		

Slate River near Arvonia, VA (#02030500):
Drainage Area = 226 mi^2

1Q30 =	2.48 cfs	30Q5 =	19.3 cfs
1Q10 =	5.93 cfs	Harmonic Mean =	72.7 cfs
7Q10 =	7.44 cfs	Annual Average =	226 cfs
30Q10 =	12.3 cfs		

Slate River at mouth:
Drainage Area = 245 mi^2

1Q30 =	2.69 cfs	30Q5 =	20.9 cfs
1Q10 =	6.43 cfs	Harmonic Mean =	78.8 cfs
7Q10 =	8.06 cfs	Annual Average =	245 cfs
30Q10 =	13.3 cfs		

The flow contributed by the intervening drainage area between the Scottsville gage and Outfall 002 was determined using the following 2 steps:

Step 1: Average the flows and drainage areas for the Hardware and Slate River gages, and make a “simulated reference gage”.

Average of Hardware River and Slate River at mouth ("simulated reference gage"):
Drainage Area = (138 + 245) ÷ 2 = 191 mi^2

1Q30	1.57	+	2.69	=	4.26	cfs	÷	2 =	2.13 cfs
1Q10	4.72	+	6.43	=	11.2	cfs	÷	2 =	5.60 cfs
7Q10	4.26	+	8.06	=	12.3	cfs	÷	2 =	6.15 cfs
30Q10	7.97	+	13.3	=	21.3	cfs	÷	2 =	10.6 cfs
30Q5	14.9	+	20.9	=	35.8	cfs	÷	2 =	17.9 cfs
Harmonic Mean	17.2	+	78.8	=	96.0	cfs	÷	2 =	48.0 cfs
Annual Average	153	+	245	=	398	cfs	÷	2 =	199 cfs

Step 2: The "simulated reference gage" was then used to determine the actual flow frequencies for the intervening drainage area by drainage area comparison. The intervening drainage area was determined by taking the drainage area at Outfall 002 and subtracting the drainage area at the Scottsville gage, and the drainage areas at the mouth of the Hardware and Slate Rivers, respectively (5059 – 4581 – 138 – 245 = 95 mi^2).

Flow Contributed by Intervening Drainage Area:
Drainage Area = 95 mi^2

1Q30 =	1.06 cfs	30Q5 =	8.90 cfs
1Q10 =	2.78 cfs	Harmonic Mean =	23.9 cfs
7Q10 =	3.06 cfs	Annual Average =	99.0 cfs
30Q10 =	5.27 cfs		

James River immediately upstream of Bremo Power Station:

The flows in the James River immediately upstream of BPS were determined by adding the respective flows for the Scottsville gage, the flows at the mouth of the Hardware and Slate Rivers, and the flows for the intervening drainage area as shown below:

Drainage Area = 5059 mi^2

1Q30	485 + 1.57 + 2.69 + 1.06 = 490 cfs	X 0.6463 =	317 MGD
1Q10	540 + 4.72 + 6.43 + 2.78 = 554 cfs	X 0.6463 =	358 MGD
7Q10	613 + 4.26 + 8.06 + 3.06 = 628 cfs	X 0.6463 =	406 MGD
30Q10	742 + 7.97 + 13.3 + 5.27 = 768 cfs	X 0.6463 =	497 MGD
30Q5	820 + 14.9 + 20.9 + 8.90 = 865 cfs	X 0.6463 =	559 MGD
Harmonic Mean	2310 + 17.2 + 78.8 + 23.9 = 2430 cfs	X 0.6463 =	1570 MGD
Annual Average	5357 + 153 + 245 + 99.0 = 5854 cfs	X 0.6463 =	3783 MGD

The values immediately upstream of the BPS do not address any discharges, withdrawals, or springs located between the Scottsville gage and the BPS.

The 1Q10, 7Q10, 30Q10, 30Q5, and Harmonic Mean for the James River immediately upstream of the BPS are lower than those contained in the 2010 Fact Sheet. The 2010 Fact Sheet utilized USGS flow gage information through 2002. The 2016 Fact Sheet utilized USGS flow gage information through March 31, 2014.

In order to calculate the flow frequencies at Outfalls 001, 002, 003 004, and 006, water withdrawals and long term average discharge flows were taken into account as summarized below:

COOLING WATER INTAKE WATER WITHDRAWAL INFORMATION

There are 2 cooling water intake structures to consider in the flow frequency determination:

1. BPS Cooling Water Intake Structure (CWIS) – The CWIS for BPS is located just downstream of Outfall 002 and upstream of Outfall 001 (refer to map in Appendix A).

   The CWIS has a maximum intake capacity of 277 cfs (179 MGD). Source: BTA Analysis of CWIS, August 11, 2011.

   The average intake flow for the years of 2011 – 2013 was 82 MGD.

   The average intake flow for the years of 2010 – 2014 was 85 MGD.

   The highest monthly average intake flow for the years of 2010 – 2014 was 114.5 MGD.

2. East Coast Transport, Inc. (ECTI) CWIS – The CWIS for ECTI is located across the James River from BPS downstream of Outfall 001 (refer to map in Appendix A).

   The ECTI intake supplies the Tenaska Virginia Generating station in Fluvanna County (VA0090905), as well as the Dominion - Bear Garden Power Station in Buckingham County (VA0090891). Although the intake serving the Tenaska Virginia Generating Station is on the James River, the discharge from Tenaska Virginia Generating Station is to the Rivanna River and Middle Fork Cunningham Creek.

   The maximum permitted withdrawal with these two facilities operating is 11,800 gallons per minute (17 MGD).

   The average intake flow for the years of 2011 – 2013 was 5.98 MGD.

   The average intake flow for the years of 2010 – 2014 was 5.2 MGD.

   The highest monthly average intake flow for the years of 2010 – 2014 was 6.9 MGD.

DISCHARGER FLOW INFORMATION

For purposes of the FFD, the long term average discharge flow is used for the most conservative evaluation.

The discharge flows that affect the flow frequency determination are presented below:

1. BPS Outfall 002 (West Ash Pond) – Outfall 002 is upstream of all other discharges and intakes. The long term average flow for Outfall 002 is 1.53 MGD (Source: January 2015 permit application). To be conservative, the long term average discharge flow for Outfall 002 was not added to the flow frequencies in the FFD calculation since the Outfall 002 flows will change during the closure activities.

2. BPS Outfall 001 (Once-Through Condenser Cooling Water) – Outfall 001 is located 0.22 river miles downstream of Outfall 002. The BPS CWIS is located 250 feet upstream of Outfall 001. The long term average flow for Outfall 001 is 91.8 MGD (January 2015 permit application).

3. Dominion Bear Garden Power Station Outfall 001 – Outfall 001 for the Dominion Bear Garden Power Station is located downstream of Outfalls 002 and 001 for BPS and is also downstream of the ECTI and BPS intakes. Outfall 001 for the Bear Garden Power Station has a long term average flow of 0.433 MGD.

CALCULATION OF FLOW FREQUENCIES FOR OUTFALL 002

Outfall 002 is upstream of all other discharges and intakes at this facility; therefore the flow frequencies calculated immediately upstream of the BPS are applicable for Outfall 002.

CALCULATION OF FLOW FREQUENCIES FOR OUTFALL 001 (Once-Through Condenser Cooling Water)

Outfall 001 is downstream of Outfall 002 (West Ash Pond) and is 250 feet downstream of the BPS cooling water intake structure.

As a conservative assumption, the maximum intake capacity for the BPS of 179 MGD was subtracted from the flow frequency values just upstream of the BPS. To be conservative, the long term average discharge flow of Outfall 002 was not added to the flow frequency values since the Outfall 002 flows will change as a result of the closure activities. The flow frequencies are shown below:

James River at Outfall 001:

1Q30	317	-	179	=	138 MGD
1Q10	358	-	179	=	179 MGD
7Q10	406	-	179	=	227 MGD
30Q10	497	-	179	=	318 MGD
30Q5	559	-	179	=	380 MGD
Harmonic Mean	1570	-	179	=	1391 MGD
Annual Average	3783	-	179	=	3604 MGD

CALCULATION OF FLOW FREQUENCIES FOR OUTFALL 004

Outfall 004 is located 0.45 river miles downstream of Outfall 001.

The CWIS flow at BPS and Outfall 001 (once through condenser cooling water) for BPS are considered to cancel each other out and are not included in the calculation for the flow frequency at Outfall 004. This was done because subtracting the maximum intake capacity of 179 MGD for the BPS CWIS and then adding the long term average flow for Outfall 001 of 91.8 MGD was not representative. This is consistent with the approach used in the 2010 Fact Sheet.

The ECTI maximum permitted withdrawal of 17 MGD has been subtracted from the flow frequency values and the long term average flow of 0.433 MGD from the Bear Garden Power Station has been added to the flow frequency values. This is consistent with the approach used in the 2010 Fact Sheet. To be conservative, the long term average flow for Outfall 002 was not added to the flow frequency calculation since the Outfall 002 flows will change during the closure activities. The flow frequencies are presented below.

James River at Outfall 004:

Drainage Area = 5059 mi^2

1Q30	317	-	17	+	0.433	=	300 MGD
1Q10	358	-	17	+	0.433	=	341 MGD
7Q10	406	-	17	+	0.433	=	389 MGD
30Q10	497	-	17	+	0.433	=	480 MGD
30Q5	559	-	17	+	0.433	=	542 MGD
Harmonic Mean	1570	-	17	+	0.433	=	1553 MGD
Annual Average	3783	-	17	+	0.433	=	3766 MGD

CALCULATION OF FLOW FREQUENCIES FOR OUTFALL 003

The discharge from Outfalls 003 and 004 are comingled in a channel leading to a brick arch culvert under the railroad tracks to the James River; therefore, the flow frequencies calculated for Outfalls 003 and 004 are identical.

CALCULATION OF FLOW FREQUENCIES FOR OUTFALL 006

Outfall 006 is located downstream of Outfalls 001 and 002 and upstream of Outfalls 003 and 004. A combination of Outfalls 002, 003, 004 and 006 will be utilized in the permit limit evaluation during the dewatering activities; therefore, the FFD for Outfall 004 and 006 are identical.

MIXING ZONE ANALYSES

DEQ's mixing zone analysis version 2.1 program (MIX.EXE) was utilized to determine the percentages of the total receiving stream flows available for mixing with the effluent. Mixing zone analyses were conducted for:

- Outfall 001
- Outfalls 002 and 004 combined flow of 4.2912 MGD
- Outfalls 002, 003, 004, and 006 combined flow of 10.2912 MGD during dewatering activities
- Outfall 002 after lining (West Treatment Pond, formerly the West Ash Pond) is complete and Outfalls 003 and 004 have been retired

The following discharge flows were utilized in the mixing evaluation:

Outfall 001(Once-Through Condenser Cooling Water)

The maximum 30-day average flow for Outfall 001 is 157.6 MGD based on DMR data from April 2012 to April 2015.

Outfall 002 and 004 Combined Discharge

In the 2010 Fact Sheet, Outfalls 002 (West Ash Pond) and 004 (North Ash Pond) were considered substantially identical outfalls since coal ash was periodically sluiced from the West Ash Pond to the North Ash Pond for final disposal. The evaluation is based on the combined flow from Outfalls 002 and 004 of 4.2912 MGD.

Outfalls 003 and 006

In the 2010 Fact Sheet, Outfalls 003 and 006 were characterized as stormwater outfalls not exposed to industrial activity. During the dewatering activities for the West Ash Pond, North Ash Pond and East Ash Ponds, Outfalls 003 and 006 may be used for discharge of the treated process wastewaters. Once the closure activities are completed, Outfall 003 will be retired and Outfall 006 will return to its original designation as a stormwater outfall not exposed to industrial activity.

Outfalls 002, 003, 004, and 006 Combined Discharge

During the dewatering activities for the West Ash Pond, North Ash Pond, East Ash Pond, and Metal Cleaning Waste Treatment Basin, wastewaters may be treated at multiple interim treatment systems. In order to allow for maximum flexibility, the permittee may discharge the dewatering wastewaters through Outfall 002, 003, 004, and/or 006 or to the Stormwater Management Pond or West Treatment Pond. The maximum combined flow discharged during this period is 10.2912 MGD.

MIX.EXE Evaluation

For purposes of evaluating toxicity, the flows for Outfalls 002 and 004 were combined. Outfalls 002 and 004 are considered substantially identical outfalls because ash sluice water from the West Ash Pond is transported to the North Ash Pond for final disposal. Because of the proximity of Outfalls 002 and 004, mixing will be evaluated using their combined effluent flows. This is consistent with the approach used in previous Fact Sheets.

For purposes of evaluating toxicity during dewatering activities, the flows for Outfalls 002, 003, 004, and 006 were combined. Because of the proximity of Outfalls 002, 003, 004, and 006 mixing will be evaluated using their combined effluent flows.

The results of the MIX.EXE evaluations are shown below.

Mix.exe Results for Outfall 001 (Once-Through Condenser Cooling Water)

```
Effluent Flow = 157.6 MGD
Stream 7Q10   = 227 MGD
Stream 30Q10 = 318 MGD
Stream 1Q10   = 179 MGD
Stream slope  = 0.00083 ft/ft
Stream width  = 400 ft
Bottom scale  =  4
Channel scale =  1

Mixing Zone Predictions @ 7Q10
Depth        = 2.5936 ft
Length       = 53784.21 ft
Velocity     = .5739 ft/sec
Residence Time = 1.0848 days

Recommendation:  A complete mix assumption is appropriate for this situation and the entire 7Q10 may be used.


Mixing Zone Predictions @ 30Q10
Depth        = 2.9482 ft
Length       = 48281.52 ft
Velocity     = .6243 ft/sec
Residence Time = .8951 days

Recommendation:  A complete mix assumption is appropriate for this situation and the entire 30Q10 may be used.


Mixing Zone Predictions @ 1Q10
Depth        = 2.3933 ft
Length       = 57548.88 ft
Velocity     = .5443 ft/sec
Residence Time = 29.3706 hours

Recommendation:  A complete mix assumption is appropriate for this situation providing no more than 3.4% of the 1Q10 is used.
  ---------------------------------------------------
Virginia DEQ Mixing Zone Analysis Version 2.1
```

Mix.exe Results for Outfall 002 and 004

Effluent Flow = 4.2912 MGD
Stream 7Q10 = 389 MGD *
Stream 30Q10 = 480 MGD *
Stream 1Q10 = 341 MGD *
Stream slope = 0.00083 ft/ft
Stream width = 400 ft
Bottom scale = 4
Channel scale = 1

Mixing Zone Predictions @ 7Q10
Depth = 2.6288 ft
Length = 53177.4 ft
Velocity = .579 ft/sec
Residence Time = 1.0631 days

Recommendation: A complete mix assumption is appropriate for this situation and the entire 7Q10 may be used.

Mixing Zone Predictions @ 30Q10
Depth = 2.9806 ft
Length = 47838.53 ft
Velocity = .6288 ft/sec
Residence Time = .8805 days

Recommendation: A complete mix assumption is appropriate for this situation and the entire 30Q10 may be used.

Mixing Zone Predictions @ 1Q10
Depth = 2.4304 ft
Length = 56809.09 ft
Velocity = .5498 ft/sec
Residence Time = 28.7011 hours

Recommendation: A complete mix assumption is appropriate for this situation providing no more than 3.48% of the 1Q10 is used.

Virginia DEQ Mixing Zone Analysis Version 2.1

*** Critical flows for Outfall 004 were used for the analysis**.

Mix.exe Results for Outfall 002, 003, 004, or 006 During Combined Dewatering Activities

Effluent Flow = 10.2912 MGD
Stream 7Q10 = 389 MGD *
Stream 30Q10 = 480 MGD *
Stream 1Q10 = 341 MGD *
Stream slope = 0.00083 ft/ft
Stream width = 400 ft
Bottom scale = 4
Channel scale = 1

Mixing Zone Predictions @ 7Q10
Depth = 2.6529 ft
Length = 52772.32 ft
Velocity = .5825 ft/sec
Residence Time = 1.0486 days

Recommendation: A complete mix assumption is appropriate for this situation and the entire 7Q10 may be used.

Mixing Zone Predictions @ 30Q10
Depth = 3.0028 ft
Length = 47539.66 ft
Velocity = .6319 ft/sec
Residence Time = .8708 days

Recommendation: A complete mix assumption is appropriate for this situation and the entire 30Q10 may be used.

Mixing Zone Predictions @ 1Q10
Depth = 2.4557 ft
Length = 56317.3 ft
Velocity = .5536 ft/sec
Residence Time = 28.2586 hours

Recommendation: A complete mix assumption is appropriate for this situation providing no more than 3.54% of the 1Q10 is used.

Virginia DEQ Mixing Zone Analysis Version 2.1

*** used critical flows for Outfall 004 for analysis.**

Mix.exe Results for Outfall 002 (West Treatment Pond) Final Operating Condition

Effluent Flow = 4.2912 MGD
Stream 7Q10 = 406 MGD *
Stream 30Q10 = 497 MGD *
Stream 1Q10 = 358 MGD *
Stream slope = 0.00083 ft/ft
Stream width = 400 ft
Bottom scale = 4
Channel scale = 1

Mixing Zone Predictions @ 7Q10

Depth = 2.6968 ft
Length = 52046.59 ft
Velocity = .5888 ft/sec
Residence Time = 1.0231 days

Recommendation: A complete mix assumption is appropriate for this situation and the entire 7Q10 may be used.

Mixing Zone Predictions @ 30Q10

Depth = 3.0433 ft
Length = 47005.99 ft
Velocity = .6375 ft/sec
Residence Time = .8535 days

Recommendation: A complete mix assumption is appropriate for this situation and the entire 30Q10 may be used.

Mixing Zone Predictions @ 1Q10

Depth = 2.5018 ft
Length = 55440.52 ft
Velocity = .5604 ft/sec
Residence Time = 27.4802 hours

Recommendation: A complete mix assumption is appropriate for this situation providing no more than 3.64% of the 1Q10 is used.

Virginia DEQ Mixing Zone Analysis Version 2.1

*** used critical flows for outfall 002 for analysis**

APPENDIX C

EVALUATION OF THE EFFLUENT

OUTFALLS 001, 101, 202, and 203

EVALUATION OF DISCHARGES FROM OUTFALL 001 (Once-Through Condenser Cooling Water)

A comparison of technology and water quality-based limits was performed, and the most stringent limits were selected. The selected limits are summarized in the table below.

Outfall 001 (Once-Through Condenser Cooling Water)

Final Limits Maximum 30-day Average Flow: 157.6 MGD

PARAMETER	BASIS FOR LIMITS	EFFLUENT LIMITATIONS		MONITORING REQUIREMENTS	
		Monthly Average	Maximum	Frequency	Sample Type
Flow (MGD)	1	NL	NL	1/Day	Estimate
---------	---------	Monthly Average	Daily Maximum	---------	---------
Total Residual Chlorine (TRC)(mg/L)*	2,3	0.0099	0.02	1/Day	Grab
Heat Rejection (x 10^9 BTU/Hr)	2,4	NA	1.62	1/Month	Calculated
Temperature (°C)	2,5	NL	NL	1/Day	IS
Intake Temperature (°C)	2,5	NL	NL	1/Day	IS
---------	---------	Minimum	Maximum	---------	---------
pH	2	6.0 SU	9.0 SU	1/Month	Grab

NL = No Limitation, monitoring required *NA = Not Applicable*
IS = Immersion Stabilization

BASIS DESCRIPTIONS
1. VPDES Permit Regulation (9VAC25-31)
2. Water Quality Standards (9VAC25-260)
3. Federal Effluent Limitation Guidelines – Steam Electric Power Generating Point Source Category (40 CFR Part 423)
4. Thermal Mixing Zone Evaluation (See APPENDIX H)
5. Best Professional Judgment

*Testing will be required in any month that chlorine is applied to the system. Should chlorine not be applied, the appropriate entry on the DMR is "NR" (without the quotation marks) to indicate "Not Required."

The discharge from Outfall 001 contains once-through condenser cooling water that is drawn from the James River. The facility does not employ cooling towers. A Thermal Mixing Zone has been established and annual monitoring of stream conditions is required (See APPENDIX G). The discharge is considered continuous for this evaluation.

EFFLUENT LIMITATIONS GUIDELINES (ELGs)

The final rule dated September 30, 2015 that becomes effective on November 29, 2015 for the Steam Electric Power category was considered. No new ELGs were proposed for once-through condenser cooling water; therefore, the ELGs below reflect the existing effective rule.

Once-through cooling water is defined in the Steam Electric Power Generating Effluent Limitations Guidelines (ELGs) at 40 CFR Part 423.11.(g).

When necessary, the deicing water system returns approximately 10,000 GPM to the intake screen to prevent blockage of flows due to accumulation of ice. The practice of reusing this heated water does not violate the definition of once - through cooling water given at 40 CFR Part 423.11(g).

ELGs for Best Practicable Control Technology Currently Available (BPT) for Once Through Cooling Water in 40 CFR Part 423.12(b)(1), (2) and (6) are as follows:

Parameter	Daily Maximum	Maximum Monthly Average
Free Available Chlorine	0.5 mg/L	0.2 mg/L
----------	Minimum	Maximum
pH	6.0 SU	9.0 SU
Polychlorinated Biphenyl Compounds (PCBs)	There shall be no discharge of PCBs as those commonly used for transformer fluid.	

ELGs for Best Available Technology Economically Achievable (BAT) for once-through cooling water for any plant with a total rated electric generating capacity of 25 or more megawatts, in 40 CFR Part 423.13(b)(1) and (2) is as follows:

Parameter	Daily Maximum	Maximum Monthly Average
TRC*	0.20 mg/L	NA

* TRC not to be discharged from any single generating unit for more than two hours per day unless the discharger demonstrates to the permitting authority that discharge for more than two hours is required for macro invertebrate control. Simultaneous multi-unit chlorination is permitted.

EVALUATION OF THE EFFLUENT – CHLORINE

Waivers from providing testing results for chlorine (free or residual) with the application were granted because the applicant stated that chlorine is not used. Limits for TRC are included in the permit to allow the applicant the flexibility to utilize chlorine should the need arise.

Federal Effluent Guidelines (40 CFR 423.13(b)(1)) state that the quantity of pollutants discharged in once-through cooling water from each discharge point shall not exceed the quantity determined by multiplying the flow of once through cooling water times the maximum concentration of 0.2 mg/L. At the permitting authority's discretion (Federal Effluent Guidelines (40 CFR 423.13(g)), the quantity of pollutants allowed to be discharged may be expressed as a concentration limitation instead of the mass based limitation specified in paragraph 423.13(b)(1). It is staff's best professional judgment that applying the maximum concentration of 0.2 mg/L to the discharge is appropriate and will allow comparison to the Virginia WQS for TRC which are established in concentration units.

In the 2010 permit, the TRC limits were based on the ELGs. In the 2016 permit, water-quality based TRC limits were calculated based on a default concentration of 20 mg/L in order to compare with the ELGs. The water quality based limits are more stringent than the Federal Effluent Guidelines and as such, the water quality based limits shall be applied.

Testing will be required in any month that chlorine is applied to the system. Should chlorine not be applied, the appropriate entry on the DMR is "NR" (without the quotation marks) to indicate "Not Required".

EVALUATION OF THE EFFLUENT – PCBS

The permit special condition that there shall be no discharge of PCBs transformer fluids has been carried forward from the previous permit.

EVALUATION OF CONVENTIONAL POLLUTANTS

The applicant submitted testing results for the conventional parameters BOD_5, TSS, and Oil & Grease. Because the discharge results from once-through cooling water drawn from the James River, there is no reason to believe any of these parameters or bacterial indicators (E. coli) are introduced or affected by the facility. Based on a review of the DMR results, the facility appears to be in compliance with the BAT requirements (40 CFR Part 423.12(b)(1)) and WQS for pH, and the pH limits of 6.0 SU to 9.0 SU have been carried forward from the previous permit.

EVALUATION OF NON-CONVENTIONAL POLLUTANTS

The basis of carrying forward the effluent limits of 1.62×10^{9} BTU/Hour for heat rejection are included in Appendix D with the discussion of the Thermal Mixing Zone. In addition, monitoring for intake temperature and effluent temperature has been required at this reissuance.

EVALUATION OF THE EFFLUENT – TOXIC POLLUTANTS

Input parameters for instream WQC and WLAs

Stream: A Flow Frequency Determination for the receiving stream is included in Appendix B. Water quality data for the receiving stream were obtained from Ambient Water Quality Monitoring Station No. 2-JMS176.63 on the James River. The ambient station is located 0.52 river miles upstream of BPS.

Stream Parameter	Value	Units
Mean Hardness (as $CaCO_3$) =	62.5	mg/L
90th Percentile Temperature =	26.86	◦ C
90th Percentile Maximum pH =	8.03	SU
10th Percentile Maximum pH =	7.06	SU

Discharge: Temperature and pH data were not necessary for parameters evaluated at this reissuance. Outfall 001 continuously discharges once-through condenser cooling water. Because the once-through condenser cooling water is not chemically altered by the addition of biocides, corrosion inhibitors, or other cooling water treatment additives, the effluent hardness is expected to be similar to the stream hardness; therefore, the mean stream hardness was used as the mean effluent hardness.

WQC and WLAs were calculated for all WQS parameters. Those WQC and WLAs are presented in the MSTRANTI spreadsheet that can be found in Appendix G. The effluent data were analyzed per the protocol for evaluation of effluent toxic pollutants included in this appendix with the following results:

- Antimony, Arsenic, Lead, Nickel, Zinc, Chromium III, Chromium VI, Copper, and Chloride: No limits were determined to be necessary.
- Sulfide: No data are available; therefore, monitoring is required. The results must be submitted using Attachment A of the permit. The monitoring is due with the permit reissuance application.

PROTOCOL FOR THE EVALUATION OF EFFLUENT TOXIC POLLUTANTS

Toxic pollutants were evaluated in accordance with OWP Guidance Memo No. 00-2011. Acute and Chronic WLAs (WLA_a and WLA_c) were analyzed according to the protocol below using a statistical approach (STAT.exe) to determine the necessity and magnitude of limits. Human Health WLAs (WLA_{hh}) were analyzed according to the same protocol through a simple comparison with the effluent data. If the WLA_{hh} exceeded the effluent datum or data mean, no limits were required. If the effluent datum or data mean exceeded the WLA_{hh}, the WLA_{hh} was imposed as the limit.

Since there are no data available for any toxic pollutants immediately upstream of this discharge, all upstream (background) pollutant concentrations are assumed to be "0".

The steps used in evaluating the effluent data are as follows:

A. If all data are reported as "below detection" or < the required Quantification Level (QL), and at least one detection level is ≤ the required QL, then the pollutant is considered to be not significantly present in the discharge and no further monitoring is required.

B. If all data are reported as "below detection", and all detection levels are > the required QL, then an evaluation is performed in which the pollutant is assumed present at the lowest reported detection level.

- B.1. If the evaluation indicates that no limits are needed, then the existing data set is adequate and no further monitoring is required.
- B.2. If the evaluation indicates that limits are needed, then the existing data set is inadequate to make a determination and additional monitoring is required.

C. If any data value is reported as detectable at or above the required QL, then the data are adequate to determine whether effluent limits are needed.

- C.1. If the evaluation indicates that no limits are needed, then no further monitoring is required.
- C.2. If the evaluation indicates that limits are needed, then the limits and associated requirements are specified in the draft permit.
- C.3. (Exception for Metals data only) If the evaluation indicates that limits are needed, but the data are reported as a form other than "Dissolved" (except for Selenium), then the existing data set is inadequate to make a determination and additional monitoring is required.

Parameter	CASRN	QL (ug/L)	Data (ug/L unless noted otherwise)	Source of Data	Data Eval
METALS					
Antimony, dissolved	7440-36-0	0.2	<1	a	B.1
Arsenic, dissolved	7440-38-2	1.0	<2	a	B.1
Cadmium, dissolved	7440-43-9	0.3	<0.3	a	A
Chromium III, dissolved	16065-83-1	0.5	<1 (Total Chromium)	a	B.1
Chromium VI, dissolved	18540-29-9	0.5	<5	a	B.1
Copper, dissolved	7440-50-8	0.5	6, 3, 3.55, 3.49, 2.58, <2.5	a,b,c,d	C.1
Lead, dissolved	7439-92-1	0.5	<1	a	B.1
Mercury, dissolved	7439-97-6	1.0	<0.2	a	A
Nickel, dissolved	7440-02-0	0.5	<5	a	B.1
Selenium, total recoverable	7782-49-2	2.0	<2	a	A
Silver, dissolved	7440-22-4	0.2	<0.2	a	A
Thallium, dissolved	7440-28-0	---	<0.3	a	A
Zinc, dissolved	7440-66-6	2.0	<10	a	B.1
PESTICIDES/PCBS					
Aldrin [C]	309-00-2	0.05	<0.05	a	A
Chlordane [C]	57-74-9	0.2	<0.2	a	A
Chlorpyrifos	2921-88-2	---	<2	a	A
DDD [C]	72-54-8	0.1	<0.05	a	A
DDE [C]	72-55-9	0.1	<0.05	a	A
DDT [C]	50-29-3	0.1	<0.05	a	A
Demeton	8065-48-3	---	<1	a	A
Diazinon	333-41-5	---	<1	a	A
Dieldrin [C]	60-57-1	0.1	<0.1	a	A
Alpha-Endosulfan	959-98-8	0.1	<0.05	a	A
Beta-Endosulfan	33213-65-9	0.1	<0.05	a	A
Alpha-Endosulfan + Beta-Endosulfan		---	<0.05	a	A
Endosulfan Sulfate	1031-07-8	0.1	<0.05	a	A
Endrin	72-20-8	0.1	<0.05	a	A
Endrin Aldehyde	7421-93-4	---	<0.05	a	A
Guthion	86-50-0	---	<1	a	A
Heptachlor [C]	76-44-8	0.05	<0.05	a	A
Heptachlor Epoxide [C]	1024-57-3	---	<0.05	a	A
Hexachlorocyclohexane Alpha-BHC [C]	319-84-6	---	<0.05	a	A
Hexachlorocyclohexane Beta-BHC [C]	319-85-7	---	<0.05	a	A
Hexachlorocyclohexane Gamma-BHC (synonym = Lindane)	58-89-9	---	<0.05	a	A
Kepone	143-50-0	---	<10.3	a	A
Malathion	121-75-5	---	<1	a	A
Methoxychlor	72-43-5	---	<0.5	a	A
Mirex	2385-85-5	---	<0.5	a	A
Parathion	56-38-2	---	<1	a	A
PCB Total [C]	1336-36-3	7.0	<0.5	a	A
Toxaphene [C]	8001-35-2	5.0	<1	a	A

BASE NEUTRAL EXTRACTABLES					
Acenaphthene	83-32-9	10.0	<10	a	A
Anthracene	120-12-7	10.0	<10	a	A
Benzidine [C]	92-87-5	---	<50	a	A
Benzo (a) anthracene [C]	56-55-3	10.0	<0.05	a	A
Benzo (b) fluoranthene [C]	205-99-2	10.0	<10	a	A
Benzo (k) fluoranthene [C]	207-08-9	10.0	<10	a	A
Benzo (a) pyrene [C]	50-32-8	10.0	<10	a	A
Bis 2-Chloroethyl Ether [C]	111-44-4	---	<10	a	A
Bis 2-Chloroisopropyl Ether	108-60-1	---	<10	a	A
Bis-2-Ethylhexyl Phthalate [C]	117-81-7	10.0	<10	a	A
Butyl benzyl phthalate	85-68-7	10.0	<10	a	A
2-Chloronaphthalene	91-58-7	---	<10	a	A
Chrysene [C]	218-01-9	10.0	<10	a	A
Dibenz(a,h)anthracene [C]	53-70-3	20.0	<10	a	A
1,2-Dichlorobenzene	95-50-1	10.0	<10	a	A
1,3-Dichlorobenzene	541-73-1	10.0	<10	a	A
1,4-Dichlorobenzene	106-46-7	10.0	<10	a	A
3,3-Dichlorobenzidine [C]	91-94-1	---	<10	a	A
Diethyl phthalate	84-66-2	10.0	<10	a	A
Dimethyl phthalate	131-11-3	---	<10	a	A
Di-n-Butyl Phthalate	84-74-2	10.0	<10	a	A
2,4-Dinitrotoluene	121-14-2	10.0	<10	a	A
1,2-Diphenylhydrazine [C]	122-66-7	---	<10	a	A
Fluoranthene	206-44-0	10.0	<10	a	A
Fluorene	86-73-7	10.0	<10	a	A
Hexachlorobenzene [C]	118-74-1	---	<10	a	A
Hexachlorobutadiene [C]	87-68-3	---	<10	a	A
Hexachlorocyclopentadiene	77-47-4	---	<10	a	A
Hexachloroethane [C]	67-72-1	---	<10	a	A
Indeno(1,2,3-cd)pyrene [C]	193-39-5	20.0	<10	a	A
Isophorone [C]	78-59-1	10.0	<10	a	A
Nitrobenzene	98-95-3	10.0	<10	a	A
N-Nitrosodimethylamine [C]	62-75-9	---	<10	a	A
N-Nitrosodi-n-propylamine [C]	621-64-7	---	<10	a	A
N-Nitrosodiphenylamine [C]	86-30-6	---	<10	a	A
Pyrene	129-00-0	10.0	<10	a	A
1,2,4-Trichlorobenzene	120-82-1	10.0	<10	a	A
VOLATILES					
Acrolein	107-02-8	---	<10	a	A
Acrylonitrile [C]	107-13-1	---	<5	a	A
Benzene [C]	71-43-2	10.0	<1	a	A
Bromoform [C]	75-25-2	10.0	<1	a	A
Carbon Tetrachloride [C]	56-23-5	10.0	<1	a	A
Chlorobenzene	108-90-7	50.0	<1	a	A
Chlorodibromomethane [C]	124-48-1	10.0	<1	a	A

Chloroform	67-66-3	10.0	<1	a	A
Dichlorobromomethane [C]	75-27-4	10.0	<1	a	A
1,2-Dichloroethane [C]	107-06-2	10.0	<1	a	A
1,1-Dichloroethylene	75-35-4	10.0	<1	a	A
1,2-trans-dichloroethylene	156-60-5	---	<1	a	A
1,2-Dichloropropane [C]	78-87-5	---	<1	a	A
1,3-Dichloropropene [C]	542-75-6	---	<10	a	A
Ethylbenzene	100-41-4	10.0	<1	a	A
Methyl Bromide	74-83-9	---	<1	a	A
Methylene Chloride [C]	75-09-2	20.0	<4	a	A
1,1,2,2-Tetrachloroethane [C]	79-34-5	---	<1	a	A
Tetrachloroethylene	127-18-4	10.0	<1	a	A
Toluene	10-88-3	10.0	<1	a	A
1,1,2-Trichloroethane [C]	79-00-5	---	<1	a	A
Trichloroethylene [C]	79-01-6	10.0	<1	a	A
Vinyl Chloride [C]	75-01-4	10.0	<1	a	A
ACID EXTRACTABLES					
2-Chlorophenol	95-57-8	10.0	<10	a	A
2,4-Dichlorophenol	120-83-2	10.0	<10	a	A
2,4-Dimethylphenol	105-67-9	10.0	<0.05	a	A
2,4-Dinitrophenol	51-28-5	---	<10	a	A
2-Methyl-4,6-Dinitrophenol	534-52-1	---	<50	a	A
Nonylphenol	104-40-51	---	<50	a	A
Pentachlorophenol [C]	87-86-5	50.0	<20	a	A
Phenol	108-95-2	10.0	<10	a	A
2,4,6-Trichlorophenol [C]	88-06-2	10.0	<10	a	A
MISCELLANEOUS					
Ammonia-N (mg/L)	766-41-7	0.2 mg/L	0.03	a	A
Chloride (mg/L)	16887-00-6	---	3.14 mg/L	a	C.1
TRC (mg/L)	7782-50-5	0.1 mg/L	20 (default value)	---	C.2
Cyanide, Free	57-12-5	10.0	<10 (Total)	a	A
Sulfide, dissolved	18496-25-8	100	No data. Testing required.	---	---
Hydrogen Sulfide	7783064	---	<1.0 mg/L	a	A
Tributyltin	60-10-5	---	Previously evaluated, no testing required.	---	---

The **superscript "C"** following the parameter name indicates that the substance is a known or suspected carcinogen; human health criteria at risk level 10^{-5}.

CASRN = Chemical Abstract Service Registry Number for each parameter is referenced in the current Water Quality Standards. A unique numeric identifier designating only one substance. The Chemical Abstract Service is a division of the American Chemical Society.

"Source of Data" codes:
a = Data from permit application 01.14.15
b = Data from 2010 permit application
c = Additional copper data received 9.10.15 and 9.16.15
d= Additional copper data received 10.27.15

"Data Evaluation" codes:
See section titled PROTOCOL FOR THE EVALUATION OF EFFLUENT TOXIC POLLUTANTS for an explanation of the code used.

STAT.EXE Results Output

Arsenic, dissolved Chronic averaging period = 4 WLAa = 350 WLAc = 370 Q.L. = 1 # samples/mo. = 1 # samples/wk. = 1 Summary of Statistics: # observations = 1 Expected Value = 2 Variance = 1.44 C.V. = 0.6 97th percentile daily values = 4.86683 97th percentile 4 day average = 3.32758 97th percentile 30 day average= 2.41210 # < Q.L. = 0 Model used = BPJ Assumptions, type 2 data No Limit is required for this material The data are: 2	**Chloride**: Chronic averaging period = 4 WLAa = 890 WLAc = 560 Q.L. = 1 # samples/mo. = 1 # samples/wk. = 1 Summary of Statistics: # observations = 1 Expected Value = 3.14 Variance = 3.54945 C.V. = 0.6 97th percentile daily values = 7.64093 97th percentile 4 day average = 5.22430 97th percentile 30 day average= 3.78700 # < Q.L. = 0 Model used = BPJ Assumptions, type 2 data No Limit is required for this material The data are: 3.14
Chromium III, dissolved Chronic averaging period = 4 WLAa = 400 WLAc = 120 Q.L. = 0.5 # samples/mo. = 1 # samples/wk. = 1 Summary of Statistics: # observations = 1 Expected Value = 1 Variance = .36 C.V. = 0.6 97th percentile daily values = 2.43341 97th percentile 4 day average = 1.66379 97th percentile 30 day average= 1.20605 # < Q.L. = 0 Model used = BPJ Assumptions, type 2 data No Limit is required for this material The data are: 1	**Chromium VI, dissolved** Chronic averaging period = 4 WLAa = 17 WLAc = 27 Q.L. = 0.5 # samples/mo. = 1 # samples/wk. = 1 Summary of Statistics: # observations = 1 Expected Value = 5 Variance = 9 C.V. = 0.6 97th percentile daily values = 12.1670 97th percentile 4 day average = 8.31895 97th percentile 30 day average= 6.03026 # < Q.L. = 0 Model used = BPJ Assumptions, type 2 data No Limit is required for this material The data are: 5

STAT.EXE Results Output

Copper, dissolved Chronic averaging period = 4 WLAa = 9 WLAc = 15 Q.L. = 0.5 # samples/mo. = 1 # samples/wk. = 1 Summary of Statistics: # observations = 6 Expected Value = 3.52 Variance = 4.46054 C.V. = 0.6 97th percentile daily values = 8.56562 97th percentile 4 day average = 5.85654 97th percentile 30 day average= 4.24530 # < Q.L. = 0 Model used = BPJ Assumptions, type 2 data No Limit is required for this material The data are: 6, 3, 3.55, 3.49, 2.58, 2.5	**Lead, dissolved** Chronic averaging period = 4 WLAa = 68 WLAc = 18 Q.L. = 0.5 # samples/mo. = 1 # samples/wk. = 1 Summary of Statistics: # observations = 1 Expected Value = 1 Variance = .36 C.V. = 0.6 97th percentile daily values = 2.43341 97th percentile 4 day average = 1.66379 97th percentile 30 day average= 1.20605 # < Q.L. = 0 Model used = BPJ Assumptions, type 2 data No Limit is required for this material The data are: 1
Nickel, dissolved Chronic averaging period = 4 WLAa = 130 WLAc = 33 Q.L. = 0.5 # samples/mo. = 1 # samples/wk. = 1 Summary of Statistics: # observations = 1 Expected Value = 5 Variance = 9 C.V. = 0.6 97th percentile daily values = 12.1670 97th percentile 4 day average = 8.31895 97th percentile 30 day average= 6.03026 # < Q.L. = 0 Model used = BPJ Assumptions, type 2 data No Limit is required for this material The data are: 5	**Total Residual Chlorine** Chronic averaging period = 4 WLAa = 0.02 WLAc = 0.027 Q.L. = 0.1 # samples/mo. = 30 # samples/wk. = 7 Summary of Statistics: # observations = 1 Expected Value = 20 Variance = 144 C.V. = 0.6 97th percentile daily values = 48.6683 97th percentile 4 day average = 33.2758 97th percentile 30 day average= 24.1210 # < Q.L. = 0 Model used = BPJ Assumptions, type 2 data A limit is needed based on Acute Toxicity Maximum Daily Limit = 0.02 Average Weekly limit = 1.22141441350406E-02 Average Monthly Limit = 9.91242327735358E-03 The data are: 20

STAT.EXE Results Output

Zinc, dissolved Chronic averaging period = 4 WLAa = 82 WLAc = 190 Q.L. = 2 # samples/mo. = 1 # samples/wk. = 1 Summary of Statistics: # observations = 1 Expected Value = 10 Variance = 36 C.V. = 0.6 97th percentile daily values = 24.3341 97th percentile 4 day average = 16.6379 97th percentile 30 day average= 12.0605 # < Q.L. = 0 Model used = BPJ Assumptions, type 2 data No Limit is required for this material The data are: 10	

EVALUATION OF DISCHARGES FROM INTERNAL OUTFALL 101 (Traveling Screen Backwash)

Basis for Permit Limits **Design Flow: NA**

PARAMETER	BASIS FOR LIMITS	EFFLUENT LIMITATIONS		MONITORING REQUIREMENTS	
		Monthly Average	Maximum	Frequency	Sample Type
	1,2	Outfall 101 shall contain only river water from the screen backwash. There shall be no discharge of process wastewater from this outfall. No monitoring of this outfall is required.			

BASIS DESCRIPTIONS
1. Water Quality Standards (9VAC25-260)
2. Best Professional Judgment

EVALUATION:
Outfall 101 is an internal discharge point for Outfall 001. The traveling screens are backwashed with river water to remove debris and fish. The spray water and debris/fish are discharged through Outfall 101 into the Outfall 001 discharge tunnel. No discharge of process wastewater is authorized and no monitoring requirements are deemed necessary.

EVALUATION OF DISCHARGES FROM INTERNAL OUTFALL 202 (Metal Cleaning Waste Treatment Basin)

A comparison of technology and water quality-based limits was performed, and the most stringent limits were selected. The selected limits are summarized in the table below.

Daily Maximum Flow: 1.6138 MGD
Basis for Permit Limits **Maximum 30-day Average Flow: 1.0146 MGD**

PARAMETER	BASIS FOR LIMITS	EFFLUENT LIMITATIONS				MONITORING REQUIREMENTS	
		Monthly Average		Maximum		Frequency	Sample Type
Flow (MGD)	1	NL		NL		1/ Month	Estimate
---------	---------	Monthly Average		Daily Maximum		---------	---------
TSS (mg/L)	2	30.0		100.0		1/ Month	Grab
Oil & Grease (mg/L)	2	15.0		20.0		1/ Month	Grab
Total Copper	2	1.0 mg/L	3.8 kg/d	1.0 mg/L	6.1 kg/d	1/ Month	Grab
Total Iron	2	1.0 mg/L	3.8 kg/d	1.0 mg/L	6.1 kg/d	1/ Month	Grab

NL = No Limitation, monitoring required *NA = Not Applicable*

BASIS DESCRIPTIONS
1. VPDES Permit Regulation (9VAC25-31)
2. Federal Effluent Limitation Guidelines (Steam Electric Power Generating Point Source Category – 40 CFR Part 423)

EFFLUENT LIMITATIONS GUIDELINES

The Metal Cleaning Waste Treatment Basin receives chemical and non-chemical metals cleaning waste generated from the cleaning of metal process equipment. Chemical metal cleaning waste and metal cleaning wastes are defined in the Steam Electric Power Generating ELGs at 40 CFR Part 423.11(c) and (d).

ELGs for Best Practicable Control Technology Currently Available (BPT) in 40 CFR Part 423.12(b)(5) are as follows:

Parameter	Daily Maximum	Maximum Monthly Average
TSS	100.0 mg/L	30.0 mg/L
Oil & Grease	20.0 mg/L	15.0 mg/L
Total Copper	1.0 mg/L	1.0 mg/L
Total Iron	1.0 mg/L	1.0 mg/L

ELGs for Best Available Technology (BAT) contained in 40 CFR Part 423.13(e) are as follows:

Parameter	Daily Maximum	Maximum Monthly Average
Total Copper	1.0 mg/L	1.0 mg/L
Total Iron	1.0 mg/L	1.0 mg/L

The applicant indicated in the 2015 Application Addendum dated October 6, 2015 that the maximum daily flow was 1.6138 MGD and the maximum 30-day average flow was 1.0146 MGD.

Loading limits for Total Copper and Total Iron were calculated as follows:

Monthly Average concentration = 1.0 mg/L
Monthly Average loading: (1.0 mg/L)(1.0146 MGD)(3.785) = 3.8 kg/d
Daily Maximum concentration = 1.0 mg/L
Daily Maximum loading: (1.0 mg/L)(1.6138 MGD)(3.785) = 6.1 kg/d

At the permitting authority's discretion (Federal Effluent Guidelines (40 CFR 423.12(b)(11)), the quantity of pollutants allowed to be discharged may be expressed as a concentration limit instead of the mass based limit specified in paragraph 423.12(b). It is staff's best professional judgment that applying the maximum concentrations and the average concentrations for TSS and Oil & Grease to the discharge will maintain and protect the water quality of the receiving stream. This approach has been carried forward from the previous permit. In addition, the monitoring results have been consistently at or below the QL for TSS and Oil & Grease.

Upon discharge of process wastewater from dewatering activities from the Metal Cleaning Waste Treatment Basin (see Part I.G.19 of the permit) and lasting until Outfall 202 is retired, the dewatering wastewaters are to be managed to address the monitoring and effluent limitations established in Appendix E. Although the monitoring and effluent limitations in Appendix E were developed to address dewatering activities for the coal ash impoundments, the monitoring and limitations are also considered to be protective in addressing dewatering activities for the Metal Cleaning Waste Treatment Basin. The management of the dewatering wastewaters may include the use of interim treatment systems. The discharge of dewatering wastewater from the Metal Cleaning Waste Treatment Basin is designated as internal Outfall 505. It is staff's best professional judgment that the effluent limits be applied to the discharge of dewatering wastewater rather than being applied at Outfall 202. Meeting effluent limits at internal Outfall 505 will protect and maintain water quality at any of the outfalls identified as discharge options, while providing Dominion with the flexibility needed to achieve closure by the required deadline.

EVALUATION OF DISCHARGES FROM INTERNAL OUTFALL 203 (Sewage Treatment Plant)

A comparison of technology and water quality-based limits was performed, and the most stringent limits were selected. The selected limits are summarized in the table below.

Basis for Permit Limits **Outfall 203 - Design Flow: 0.0432 MGD**

PARAMETER	BASIS FOR LIMITS	EFFLUENT LIMITATIONS				MONITORING REQUIREMENTS	
		Monthly Average		Maximum		Frequency	Sample Type
Flow (MGD)	1	NL		NL		1/Month	Estimate
---------	-------	Monthly Average		Weekly Average		--------	----------
BOD_5	2	30 mg/L	4.9 kg/d	45 mg/L	7.4 kg/d	1/Month	Grab
TSS	2	30 mg/L	4.9 kg/d	45 mg/L	7.4 kg/d	1/Month	Grab
E. coli (Geometric Mean) (N/100mL)	4	126 Geometric Mean		NA		4/Month in any month of each calendar year 10 a.m. to 4 p.m.* or 2/Week 10 a.m. to 4 p.m.**	Grab
---------	---------	Minimum		Maximum		---------	---------
pH	2	6.0		9.0		1/Month	Grab
Contact Chlorine (TRC)(mg/L)	3,4	1.0		NA		1/Day	Grab

NL = No Limitation, monitoring required *NA = Not Applicable*
4/Month in any month of each calendar year = 4 samples with at least 1 sample taken each calendar week, in any calendar month and reported with the December DMR due January 10th of every year.
2/Week = 2 samples taken during the calendar week, no less than 48 hours apart

* = *Applicable only when chlorination is used for disinfection*
** = *Applicable if an alternative to chlorination is used for disinfection.*

BASIS DESCRIPTIONS
1. VPDES Permit Regulation (9VAC25-31)
2. Federal Effluent Requirements (Secondary Treatment Regulation – 40CFR133)
3. Best Professional Judgment
4. Water Quality Standards
5. Guidance Memo No. 14-2011

DESCRIPTION OF EXISTING STP:
Sanitary wastewater is treated in a separate sewage treatment plant which discharges through internal Outfall 203 to the Stormwater Management Pond.

Design Flow: 0.0432 MGD
Average Flow: 0.008 MGD

The STP consists of two parallel septic tanks which provide primary treatment and sedimentation. Two centrifugal pumps deliver wastewater to one or both of two chlorine tablet feeders as determined by flow. Solids from the septic tanks and chlorine contact tank are pumped and hauled to Moores Creek Regional WWTF for further treatment and disposal. The effluent discharges intermittently from the chlorine contact tank to the Stormwater Management Pond.

The Virginia Department of Health concurred on a Reliability Class II classification for the STP on June 3, 2015.

Diagram of STP

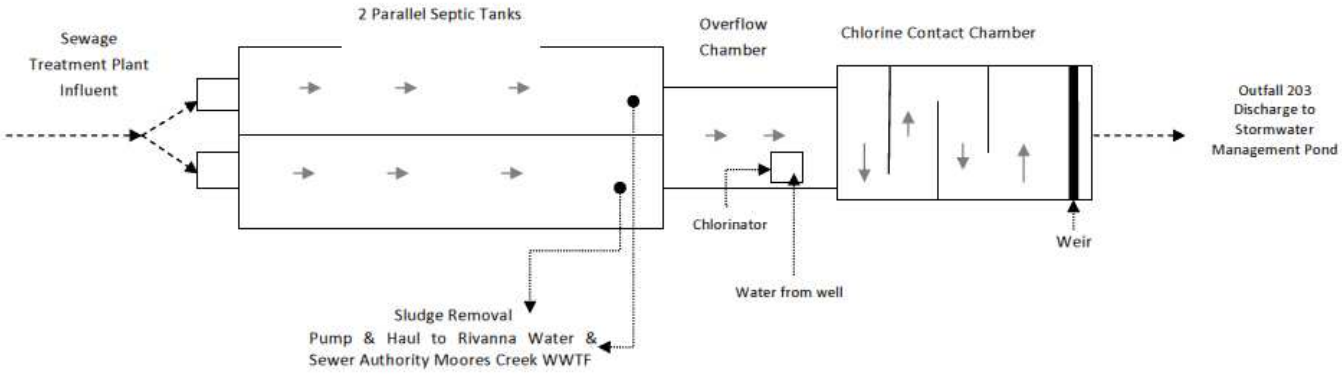

EVALUATION OF THE EFFLUENT – FEDERAL EFFLUENT GUIDELINES FOR SECONDARY TREATMENT: 40 CFR Part 133.102

The 30-day average for BOD_5 and TSS shall not exceed 30 mg/L.
The 7-day average for BOD_5 and TSS shall not exceed 45 mg/L.
The pH must be in the range of 6.0 – 9.0 SU

These secondary treatment limits apply to internal Outfall 203 for the sanitary WWTP.

EVALUATION OF THE EFFLUENT – BOD_5 AND TSS

The BOD_5 and TSS limits at Outfall 203 are based on the Secondary Treatment Regulations and were calculated as follows:

Monthly Average: (30 mg/L)(0.0432 MGD)(3.785) = 4.9 kg/d
Maximum Weekly Average: (45 mg/L)(0.0432 MGD)(3.785) = 7.35 kg/d, round to 7.4 kg/d

The secondary treatment standards are technology standards and apply to the sanitary wastewater discharge prior to comingling with the industrial wastewater. There is no recent data confirming that the Outfall 203 discharge meets secondary treatment standards prior to discharge to the Stormwater Management Pond. DEQ has previously allowed Form 2C application sampling data for BOD_5, TSS, and pH at Outfall 002 to serve as an indication that the secondary treatment levels are achieved. Because the effluent from Stormwater Management Pond will no longer be routed to the West Ash Pond which provided additional treatment, effluent limits for BOD_5, TSS, and pH have been imposed at Outfall 203 at a frequency of 1/Month to confirm that secondary treatment levels are achieved by the STP.

EVALUATION OF THE EFFLUENT – DISINFECTION

Chlorine disinfection is utilized in the STP. When chlorination is utilized minimum contact TRC limits are required. In addition to the minimum TRC contact requirements, E. coli monitoring at a frequency of 4/Month sampling during at least 1 month in each calendar year of the permit term has been imposed to demonstrate compliance with the monthly geometric mean limit and to ensure adequate disinfection. This additional E. coli monitoring has been imposed in accordance with Guidance Memo No. 14-2003. If an alternative to chlorination is utilized, E. coli monitoring is required 2/Week to demonstrate compliance with the monthly geometric mean limit.

The STP does not include dechlorination. Monitoring and limits for TRC have been imposed at this reissuance at any outfall that receives effluent from the Stormwater Management Pond in order to ensure that the chlorine concentrations in any effluent that reaches the James River are protective of water quality.

APPENDIX D

EVALUATION OF THE EFFLUENT

OUTFALLS 002, 003, 004, and 006

A comparison of technology and water quality-based limits was performed, and the most stringent limits were selected. The selected limits are summarized in the table below.

Outfalls 002/004 **Final Limits** **Combined Flow: 4.2912 MGD**

PARAMETER	BASIS FOR LIMITS	EFFLUENT LIMITATIONS		MONITORING REQUIREMENTS	
		Monthly Average	Maximum	Frequency	Sample Type
Flow (MGD)	1	NL	NL	2/Month	Estimate
---------	---------	Monthly Average	Daily Maximum	---------	---------
TSS	3	30.0 mg/L	100.0 mg/L	2/Month	Grab
Oil & Grease (mg/L)	3	15.0	20.0	2/Month	Grab
Total Residual Chlorine (TRC)(mg/L)	2	0.036	0.072	1/Day	Grab
---------	---------	Minimum	Maximum	---------	---------
pH	2,3	6.0 SU	9.0 SU	2/Month	Grab

NL = No Limitation, monitoring required *NA = Not Applicable*
2/Month = 2 samples taken during the calendar month, no less than 7 days apart

BASIS DESCRIPTIONS
1. VPDES Permit Regulation (9VAC25-31)
2. Water Quality Standards (9VAC25-260)
3. Federal Effluent Limitation Guidelines (Steam Electric Power Generating Point Source Category – 40 CFR Part 423)

APPENDIX A lists all of the sources of wastewater which are directed to the West Ash Pond and North Ash Pond.

EFFLUENT LIMITATIONS GUIDELINES
Fly Ash and Bottom Ash are defined in the Steam Electric Power Generating ELGs at 40 CFR Part 423.11 (e) and (f).

ELGs for Best Practicable Control Technology Currently Available (BPT) for Fly Ash and Bottom Ash transport water in 40 CFR Part 423.12(b)(4) are as follows:

Parameter	Daily Maximum	Maximum Monthly Average
TSS	100.0 mg/L	30.0 mg/L
Oil & Grease	20.0 mg/L	15.0 mg/L

Low volume waste sources are defined in the Steam Electric Power Generating ELGs at 40 CFR Part 423.11 (b).

ELGs for Best Practicable Control Technology Currently Available (BPT) for low volume waste sources in 40 CFR Part 423.12(b)(3) are as follows:

Parameter	Daily Maximum	Maximum Monthly Average
TSS	100.0 mg/L	30.0 mg/L
Oil & Grease	20.0 mg/L	15.0 mg/L

pH – BPT limits are 6.0 to 9.0 SU for all discharges except once through cooling water in accordance with 40 CFR Part 423.12(b)(1). Testing results indicate that the applicant is currently in compliance with these limits.

The four-year composite average for TSS is 18 mg/L. The ratio of this long term average to the monthly average limit is 60%. Based on this ratio, the monitoring frequency of 2/Month has been carried forward from the previous permit. Oil & Grease cannot be calculated because testing results over the last three years have always been less than QL. The monitoring frequency has been set at 2/Month at this reissuance based on past monitoring results.

The applicant stated that the low volume wastewater influent to the "Ash Sluice Water" consists of localized rinsing of ash from the boiler tubes, blasting/rinsing of clinkers, cleaning of FD fans, PA fans and ID fans, turbine cleaning, and other wastewaters identified as low volume waste.

Limits for low volume wastes are not applied to the Stormwater Management Pond because: 1) additional treatment for these parameters is provided; and 2) the Outfall 002 effluent has consistently met the limits for TSS and the concentration of Oil & Grease has always been below QL.

At the permitting authority's discretion (Federal Effluent Guidelines (40 CFR 423.12(b)(11)), the quantity of pollutants allowed to be discharged may be expressed as a concentration limit instead of the mass based limit specified in paragraph 423.12(b). It is staff's best professional judgment that applying the maximum concentrations and the average concentrations for TSS and Oil & Grease to the discharge will maintain and protect the water quality of the receiving stream. This approach has been carried forward from the previous permit.

EVALUATION OF THE EFFLUENT – TOXIC POLLUTANTS

Input parameters for WQC and WLAs

Stream: A Flow Frequency Determination for the receiving stream is included in Appendix B. Water quality data for the receiving stream were obtained from Ambient Water Quality Monitoring Station No. 2-JMS176.63 on the James River. The ambient station is located 0.52 river miles upstream of BPS.

Stream Parameter	Value	Units
Mean Hardness (as $CaCO_3$) =	62.5	mg/L
90th Percentile Temperature =	26.86	◦ C
90th Percentile Maximum pH =	8.03	SU
10th Percentile Maximum pH =	7.06	SU

Discharge: Temperature and hardness data were obtained from the 2015 application submitted by the permittee for Outfall 002. pH data were determined from DMR data.

Discharge Parameter	Value	Units
Mean Hardness (as $CaCO_3$) =	70.1	mg/L
90th Percentile Temperature =	28.3	°C
90th Percentile Maximum pH =	8.3	SU
10th Percentile Maximum pH =	7.0	SU

WQC and WLAs were calculated for all WQS parameters. Those WQC and WLAs are presented in the MSTRANTI spreadsheet that can be found in Appendix G. The effluent data were analyzed per the protocol for evaluation of effluent toxic pollutants included in this appendix with the following results:

- TRC – Limits are required for TRC to address the discharge of chlorinated sanitary wastewater to the Stormwater Management Pond which ultimately may be discharged to either Outfall 002 and/or Outfall 004. The TRC limits and monitoring apply if effluent from the Stormwater Management Pond is being discharged through the specific outfall.

PROTOCOL FOR THE EVALUATION OF EFFLUENT TOXIC POLLUTANTS

Toxic pollutants were evaluated in accordance with OWP Guidance Memo No. 00-2011. Acute and Chronic WLAs (WLA_a and WLA_c) were analyzed according to the protocol below using a statistical approach (STAT.exe) to determine the necessity and magnitude of limits. Human Health WLAs (WLA_{hh}) were analyzed according to the same protocol through a simple comparison with the effluent data. If the WLA_{hh} exceeded the effluent datum or data mean, no limits were required. If the effluent datum or data mean exceeded the WLA_{hh}, the WLA_{hh} was imposed as the limit.

Since there are no data available for any toxic pollutants immediately upstream of this discharge, all upstream (background) pollutant concentrations are assumed to be "0".

The steps used in evaluating the effluent data are as follows:

A. If all data are reported as "below detection" or < the required Quantification Level (QL), and at least one detection level is ≤ the required QL, then the pollutant is considered to be not significantly present in the discharge and no further monitoring is required.

B. If all data are reported as "below detection", and all detection levels are > the required QL, then an evaluation is performed in which the pollutant is assumed present at the lowest reported detection level.

- B.1. If the evaluation indicates that no limits are needed, then the existing data set is adequate and no further monitoring is required.
- B.2. If the evaluation indicates that limits are needed, then the existing data set is inadequate to make a determination and additional monitoring is required.

C. If any data value is reported as detectable at or above the required QL, then the data are adequate to determine whether effluent limits are needed.

- C.1. If the evaluation indicates that no limits are needed, then no further monitoring is required.
- C.2. If the evaluation indicates that limits are needed, then the limits and associated requirements are specified in the draft permit.
- C.3. (Exception for Metals data only) If the evaluation indicates that limits are needed, but the data are reported as a form other than "Dissolved" (except for Selenium), then the existing data set is inadequate to make a determination and additional monitoring is required.

Parameter	CASRN	QL (ug/L)	Data (ug/L unless noted otherwise)	Source of Data	Data Eval
METALS					
Antimony, dissolved	7440-36-0	0.2	<1	a	B.1
Arsenic, dissolved	7440-38-2	1.0	4	a	C.1
Cadmium, dissolved	7440-43-9	0.3	<0.3	a	A
Chromium III, dissolved	16065-83-1	0.5	<1 (Total Chromium)	a	B.1
Chromium VI, dissolved	18540-29-9	0.5	<5	a	B.1
Copper, dissolved	7440-50-8	0.5	4	a	C.1
Lead, dissolved	7439-92-1	0.5	<1	a	B.1
Mercury, dissolved	7439-97-6	1.0	<0.2	a	A
Nickel, dissolved	7440-02-0	0.5	<5	a	B.1
Selenium, total recoverable	7782-49-2	2.0	<2	a	A
Silver, dissolved	7440-22-4	0.2	<0.2	a	A
Thallium, dissolved	7440-28-0	---	<0.3	a	A
Zinc, dissolved	7440-66-6	2.0	<10	a	B.1
PESTICIDES/PCBS					
Aldrin [C]	309-00-2	0.05	<0.05	a	A
Chlordane [C]	57-74-9	0.2	<0.2	a	A
Chlorpyrifos	2921-88-2	---	<2	a	A
DDD [C]	72-54-8	0.1	<0.05	a	A
DDE [C]	72-55-9	0.1	<0.05	a	A
DDT [C]	50-29-3	0.1	<0.05	a	A
Demeton	8065-48-3	---	<1	a	A
Diazinon	333-41-5	---	<1	a	A
Dieldrin [C]	60-57-1	0.1	<0.05	a	A
Alpha-Endosulfan	959-98-8	0.1	<0.05	a	A
Beta-Endosulfan	33213-65-9	0.1	<0.05	a	A
Alpha-Endosulfan + Beta-Endosulfan		---	<0.05	a	A
Endosulfan Sulfate	1031-07-8	0.1	<0.05	a	A
Endrin	72-20-8	0.1	<0.05	a	A
Endrin Aldehyde	7421-93-4	---	<0.05	a	A
Guthion	86-50-0	---	<1	a	A
Heptachlor [C]	76-44-8	0.05	<0.05	a	A
Heptachlor Epoxide [C]	1024-57-3	---	<0.05	a	A
Hexachlorocyclohexane Alpha-BHC [C]	319-84-6	---	<0.05	a	A
Hexachlorocyclohexane Beta-BHC [C]	319-85-7	---	<0.05	a	A
Hexachlorocyclohexane Gamma-BHC (synonym = Lindane)	58-89-9	---	<0.05	a	A
Kepone	143-50-0	---	<10	a	A
Malathion	121-75-5	---	<1	a	A
Methoxychlor	72-43-5	---	<0.5	a	A
Mirex	2385-85-5	---	<0.5	a	A
Parathion	56-38-2	---	<1	a	A
PCB Total [C]	1336-36-3	7.0	<0.5	a	A
Toxaphene [C]	8001-35-2	5.0	<1	a	A

Parameter	CASRN	QL (ug/L)	Data (ug/L unless noted otherwise)	Source of Data	Data Eval
BASE NEUTRAL EXTRACTABLES					
Acenaphthene	83-32-9	10.0	<10	a	A
Anthracene	120-12-7	10.0	<10	a	A
Benzidine [C]	92-87-5	---	<50	a	A
Benzo (a) anthracene [C]	56-55-3	10.0	<0.05	a	A
Benzo (b) fluoranthene [C]	205-99-2	10.0	<10	a	A
Benzo (k) fluoranthene [C]	207-08-9	10.0	<10	a	A
Benzo (a) pyrene [C]	50-32-8	10.0	<10	a	A
Bis 2-Chloroethyl Ether [C]	111-44-4	---	<10	a	A
Bis 2-Chloroisopropyl Ether	108-60-1	---	<10	a	A
Bis-2-Ethylhexyl Phthalate [C]	117-81-7	10.0	<10	a	A
Butyl benzyl phthalate	85-68-7	10.0	<10	a	A
2-Chloronaphthalene	91-58-7	---	<10	a	A
Chrysene [C]	218-01-9	10.0	<10	a	A
Dibenz(a,h)anthracene [C]	53-70-3	20.0	<10	a	A
1,2-Dichlorobenzene	95-50-1	10.0	<10	a	A
1,3-Dichlorobenzene	541-73-1	10.0	<10	a	A
1,4-Dichlorobenzene	106-46-7	10.0	<10	a	A
3,3-Dichlorobenzidine [C]	91-94-1	---	<10	a	A
Diethyl phthalate	84-66-2	10.0	<10	a	A
Dimethyl phthalate	131-11-3	---	<10	a	A
Di-n-Butyl Phthalate	84-74-2	10.0	<10	a	A
2,4-Dinitrotoluene	121-14-2	10.0	<10	a	A
1,2-Diphenylhydrazine [C]	122-66-7	---	<10	a	A
Fluoranthene	206-44-0	10.0	<10	a	A
Fluorene	86-73-7	10.0	<10	a	A
Hexachlorobenzene [C]	118-74-1	---	<10	a	A
Hexachlorobutadiene [C]	87-68-3	---	<10	a	A
Hexachlorocyclopentadiene	77-47-4	---	<10	a	A
Hexachloroethane [C]	67-72-1	---	<10	a	A
Indeno(1,2,3-cd)pyrene [C]	193-39-5	20.0	<10	a	A
Isophorone [C]	78-59-1	10.0	<10	a	A
Nitrobenzene	98-95-3	10.0	<1	a	A
N-Nitrosodimethylamine [C]	62-75-9	---	<10	a	A
N-Nitrosodi-n-propylamine [C]	621-64-7	---	<10	a	A
N-Nitrosodiphenylamine [C]	86-30-6	---	<10	a	A
Pyrene	129-00-0	10.0	<10	a	A
1,2,4-Trichlorobenzene	120-82-1	10.0	<10	a	A
VOLATILES					
Acrolein	107-02-8	---	<10	a	A
Acrylonitrile [C]	107-13-1	---	<10	a	A
Benzene [C]	71-43-2	10.0	<5	a	A
Bromoform [C]	75-25-2	10.0	<1	a	A
Carbon Tetrachloride [C]	56-23-5	10.0	<1	a	A
Chlorobenzene	108-90-7	50.0	<1	a	A

Parameter	CASRN	QL (ug/L)	Data (ug/L unless noted otherwise)	Source of Data	Data Eval
Chlorodibromomethane [C]	124-48-1	10.0	<1	a	A
Chloroform	67-66-3	10.0	<1	a	A
Dichlorobromomethane [C]	75-27-4	10.0	<1	a	A
1,2-Dichloroethane [C]	107-06-2	10.0	<1	a	A
1,1-Dichloroethylene	75-35-4	10.0	<1	a	A
1,2-trans-dichloroethylene	156-60-5	---	<1	a	A
1,2-Dichloropropane [C]	78-87-5	---	<1	a	A
1,3-Dichloropropene [C]	542-75-6	---	<10	a	A
Ethylbenzene	100-41-4	10.0	<1	a	A
Methyl Bromide	74-83-9	---	<1	a	A
Methylene Chloride [C]	75-09-2	20.0	<4	a	A
1,1,2,2-Tetrachloroethane [C]	79-34-5	---	<1	a	A
Tetrachloroethylene	127-18-4	10.0	<1	a	A
Toluene	10-88-3	10.0	<1	a	A
1,1,2-Trichloroethane [C]	79-00-5	---	<1	a	A
Trichloroethylene [C]	79-01-6	10.0	<1	a	A
Vinyl Chloride [C]	75-01-4	10.0	<1	a	A
ACID EXTRACTABLES					
2-Chlorophenol	95-57-8	10.0	<10	a	A
2,4-Dichlorophenol	120-83-2	10.0	<10	a	A
2,4-Dimethylphenol	105-67-9	10.0	<0.5	a	A
2,4-Dinitrophenol	51-28-5	---	<10	a	A
2-Methyl-4,6-Dinitrophenol	534-52-1	---	<50	a	A
Nonylphenol	104-40-51	---	<5	a	A
Pentachlorophenol [C]	87-86-5	50.0	<20	a	A
Phenol	108-95-2	10.0	<10	a	A
2,4,6-Trichlorophenol [C]	88-06-2	10.0	<10	a	A
MISCELLANEOUS					
Ammonia-N (mg/L)	766-41-7	0.2 mg/L	0.02	a	A
Chloride (mg/L)	16887-00-6	---	16.27	a	C.1
TRC (mg/L)	7782-50-5	0.1 mg/L	Believed absent; waived at application	---	---
Cyanide, Free	57-12-5	10.0	<10	a	A
Sulfide, dissolved	18496-25-8	100	No data. Testing will be required for Outfall 002 (West Treatment Pond) Final configuration	---	---
Hydrogen Sulfide	7783064	---	<1.0 mg/L	a	A
Tributyltin	60-10-5	---	<0.03	b	A
Hardness (mg/L as $CaCO_3$)	471-34-1	---	70.1	a	---

The **superscript "C"** following the parameter name indicates that the substance is a known or suspected carcinogen; human health criteria at risk level 10^{-5}.

CASRN = Chemical Abstract Service Registry Number for each parameter is referenced in the current Water Quality Standards. A unique numeric identifier designating only one substance. The Chemical Abstract Service is a division of the American Chemical Society.

"Source of Data" codes:
a = Permit application 01.14.15
b= Permit application 01.05.10
"Data Evaluation" codes:
See section titled PROTOCOL FOR THE EVALUATION OF EFFLUENT TOXIC POLLUTANTS for an explanation of the code used.

STAT.EXE Results Output

Arsenic, dissolved Chronic averaging period = 4 WLAa = 1300 WLAc = 3400 Q.L. = 1 # samples/mo. = 1 # samples/wk. = 1 Summary of Statistics: # observations = 1 Expected Value = 4 Variance = 5.76 C.V. = 0.6 97th percentile daily values = 9.73367 97th percentile 4 day average = 6.65516 97th percentile 30 day average= 4.82421 # < Q.L. = 0 Model used = BPJ Assumptions, type 2 data No Limit is required for this material The data are: 4	**Chloride** Chronic averaging period = 4 WLAa = 3200 WLAc = 5300 Q.L. = 1 # samples/mo. = 1 # samples/wk. = 1 Summary of Statistics: # observations = 1 Expected Value = 16.27 Variance = 95.2966 C.V. = 0.6 97th percentile daily values = 39.5917 97th percentile 4 day average = 27.0698 97th percentile 30 day average= 19.6224 # < Q.L. = 0 Model used = BPJ Assumptions, type 2 data No Limit is required for this material The data are: 16.27
Chromium III, dissolved Chronic averaging period = 4 WLAa = 1500 WLAc = 1200 Q.L. = 0.5 # samples/mo. = 1 # samples/wk. = 1 Summary of Statistics: # observations = 1 Expected Value = 1 Variance = .36 C.V. = 0.6 97th percentile daily values = 2.43341 97th percentile 4 day average = 1.66379 97th percentile 30 day average= 1.20605 # < Q.L. = 0 Model used = BPJ Assumptions, type 2 data No Limit is required for this material The data are: 1	**Chromium VI, dissolved** Chronic averaging period = 4 WLAa = 60 WLAc = 250 Q.L. = 0.5 # samples/mo. = 1 # samples/wk. = 1 Summary of Statistics: # observations = 1 Expected Value = 5 Variance = 9 C.V. = 0.6 97th percentile daily values = 12.1670 97th percentile 4 day average = 8.31895 97th percentile 30 day average= 6.03026 # < Q.L. = 0 Model used = BPJ Assumptions, type 2 data No Limit is required for this material The data are: 5

STAT.EXE Results Output

Copper, dissolved Chronic averaging period = 4 WLAa = 33 WLAc = 140 Q.L. = 0.5 # samples/mo. = 1 # samples/wk. = 1 Summary of Statistics: # observations = 1 Expected Value = 4 Variance = 5.76 C.V. = 0.6 97th percentile daily values = 9.73367 97th percentile 4 day average = 6.65516 97th percentile 30 day average= 4.82421 # < Q.L. = 0 Model used = BPJ Assumptions, type 2 data No Limit is required for this material The data are: 4	**Lead, dissolved** Chronic averaging period = 4 WLAa = 260 WLAc = 170 Q.L. = 0.5 # samples/mo. = 1 # samples/wk. = 1 Summary of Statistics: # observations = 1 Expected Value = 1 Variance = .36 C.V. = 0.6 97th percentile daily values = 2.43341 97th percentile 4 day average = 1.66379 97th percentile 30 day average= 1.20605 # < Q.L. = 0 Model used = BPJ Assumptions, type 2 data No Limit is required for this material The data are: 1
Nickel, dissolved Chronic averaging period = 4 WLAa = 470 WLAc = 310 Q.L. = 0.5 # samples/mo. = 1 # samples/wk. = 1 Summary of Statistics: # observations = 1 Expected Value = 5 Variance = 9 C.V. = 0.6 97th percentile daily values = 12.1670 97th percentile 4 day average = 8.31895 97th percentile 30 day average= 6.03026 # < Q.L. = 0 Model used = BPJ Assumptions, type 2 data No Limit is required for this material The data are: 5	**Zinc, dissolved** Chronic averaging period = 4 WLAa = 300 WLAc = 1800 Q.L. = 2 # samples/mo. = 1 # samples/wk. = 1 Summary of Statistics: # observations = 1 Expected Value = 10 Variance = 36 C.V. = 0.6 97th percentile daily values = 24.3341 97th percentile 4 day average = 16.6379 97th percentile 30 day average= 12.0605 # < Q.L. = 0 Model used = BPJ Assumptions, type 2 data No Limit is required for this material The data are: 10

STAT.EXE Results Output

Total Residual Chlorine
Chronic averaging period = 4
WLAa = 0.072
WLAc = 0.25
Q.L. = 0.1
# samples/mo. = 30
# samples/wk. = 7

Summary of Statistics:

observations = 1
Expected Value = 20
Variance = 144
C.V. = 0.6
97th percentile daily values = 48.6683
97th percentile 4 day average = 33.2758
97th percentile 30 day average= 24.1210
< Q.L. = 0
Model used = BPJ Assumptions, type 2 data

A limit is needed based on Acute Toxicity
Maximum Daily Limit = 0.072
Average Weekly limit = 0.043970918886146
Average Monthly Limit = 3.56847237984729E-02

The data are: 20

EVALUATION OF DISCHARGES FROM OUTFALLS 003 AND 006

Outfall 003
During the period prior to Part I.A.9 of the permit becoming effective, Outfall 003 shall contain only stormwater not associated with a regulated industrial activity where monitoring would be required. There shall be no discharge of process wastewater from Outfall 003 prior to Part I.A.9 of the permit becoming effective.

During the dewatering activities when Part I.A.9 of the permit is effective, process wastewater from internal Outfalls 501, 502, 503, 504, and 505 may be discharged through Outfall 003.

Outfall 003 will be retired following the completion of the dewatering activities at the facility.

Outfall 006
During the period prior to Part I.A.9 of the permit becoming effective, Outfall 006 shall contain only stormwater not associated with a regulated industrial activity where monitoring would be required. There shall be no discharge of process wastewater from Outfall 006 prior to Part I.A.9 of the permit becoming effective.

During the dewatering activities when Part I.A.9 of the permit is effective, process wastewater from Outfalls 501, 502, 503, 504, and 505 may be discharged through Outfall 006.

Following the dewatering activities, Outfall 006 shall contain only stormwater not associated with a regulated industrial activity where monitoring would be required. There shall be no discharge of process wastewater from Outfall 006 during this period.

APPENDIX E

PROCESS WASTEWATER FROM DEWATERING ACTIVITIES

Outfalls 501, 502, 503, 504, and 505 **Final Limits** **Combined Flow: 10.2912 MGD**

PARAMETER	BASIS FOR LIMITS	EFFLUENT LIMITATIONS		MONITORING REQUIREMENTS	
		Monthly Average	Maximum	Frequency	Sample Type
Flow (MGD)	1	NL	NL	1/Day	Estimate
TRC (mg/L)	2	0.020	0.041	1/Day	Grab
TSS (mg/L)	3	30.0	100.0	1/Week	4 HC
Oil & Grease (mg/L)	3	15.0	20.0	1/Week	4 HC
Total Recoverable Antimony (ug/L)	2,4	3,400	3,400	1/Week	4 HC
Total Recoverable Arsenic (ug/L)	2,4	500	740	1/Week	4 HC
Total Recoverable Cadmium (ug/L)	2,4	4.5	6.6	1/Week	4 HC
Total Recoverable Chromium III	2,4	500	730	1/Week	4 HC
Total Recoverable Chromium VI	2,4	24	35	1/Week	4 HC
Total Recoverable Copper (ug/L)	2,4	16	24	1/Week	4 HC
Total Recoverable Lead (ug/L)	2,4	73	110	1/Week	4 HC
Total Recoverable Mercury (ug/L)	2,4	2.0	3.0	1/Week	4 HC
Total Recoverable Nickel (ug/L)	2,4	130	190	1/Week	4 HC
Total Recoverable Selenium (ug/L)	2,4	29	43	1/Week	4 HC
Total Recoverable Silver (ug/L)	2,4	3.5	5.1	1/Week	4 HC
Total Recoverable Thallium (ug/L)	2,4	2.5	2.5	1/Week	4 HC
Total Recoverable Zinc (ug/L)	2,4	140	210	1/Week	4 HC
Chloride (mg/L)	2,4	1,300	1,900	1/Week	4 HC
Ammonia-N (mg/L)	2,4	9.6	14	1/Week	4 HC
Hardness (mg/L as $CaCO_3$)	2,4	NL	NL	1/Week	4 HC
---------	---------	Minimum	Maximum	---------	---------
pH	2,3	6.0 SU	9.0 SU	1/Week	Grab
Acute WET, *Ceriodaphnia dubia* (%)	2,4	100	NA	1/Month	24 HC
Chronic WET, *Ceriodaphnia dubia* (TU_c)	2,4	NA	6.25	1/Month	24 HC
Acute WET, *Pimephales promelas* (%)	2,4	100	NA	1/Month	24 HC
Chronic WET, *Pimephales promelas* (TU_c)	2,4	NA	6.25	1/Month	24 HC

NL = No Limitation, monitoring required NA = Not Applicable 4HC = 4-Hour Composite 24HC =24-Hour Composite
1/3 Months = Sampling each calendar quarter with the results submitted with the DMR due January 10th, April 10th, July 10th and October 10th of each year

BASIS DESCRIPTIONS
1. VPDES Permit Regulation (9VAC25-31)
2. Water Quality Standards (9VAC25-260)
3. Federal Effluent Limitation Guidelines (Steam Electric Power Generating Point Source Category – 40 CFR Part 423)
4. See rationale in Appendix E

Ash dewatering water (pore water within the coal combustion residuals mass) and contact stormwater (stormwater that has contacted the coal combustion residuals) are process wastewater from dewatering activities.

Compliance with the limits above may be demonstrated with or without additional treatment.

Discharges associated with Coal Combustion Residual Impoundment Closure: Effluent Screening and Limitation Development

Effective October 2015, the U.S. Environmental Protection Agency (EPA) adopted a final Rule that will regulate the disposal of coal combustion residuals (CCR) as solid waste under subtitle D of the Resource Conservation and Recovery Act. Coal combustion residuals (otherwise known as coal ash) may include fly ash, bottom ash, boiler slag, and other low volume waste materials and are generated from burning coal for the purposes of generating electrical power. Disposal of the CCRs at this facility has historically been accomplished in impoundments located on site. These impoundments include surface waters originating from precipitation, storm water runoff into the impoundments, comingled process wastewaters, and waters used to hydraulically dredge ash from one pond to another. Interstitial, or pore, waters, also exist within the bottom residual mass of the impoundment. Due to its direct contact and exposure to the coal ash materials, the pollutant concentrations of the coal ash interstitial waters may pose a reasonable potential to exceed established water quality criteria. In response to EPA's 2015 CCR Rule, the owner plans to remove and discharge the accumulated waters to dry the ash and residuals that have settled to the bottom of the impoundment. This process is expected to involve the disturbance, movement, or re-suspension of the bottom residuals. Drying the ash and bottom residuals will facilitate their subsequent removal or construction of a closure cap of the impoundment system.

To identify and evaluate constituents of potential concern (COPC) associated with the removal of waters from the coal ash ponds, DEQ relied upon work previously performed by the EPA and documented in the following: 1) 40CFR Part 423 federal effluent limitation guidelines (ELGs) for the "Steam Electric Power Generating Point Source Category;" 2) a June 7, 2010 EPA memorandum titled, "National Pollutant Discharge Elimination System (NPDES) Permitting of Wastewater Discharges from Flue Gas Desulfurization (FGD) and Coal Combustion Residual (CCR) Impoundments at Steam Electric Power Plants;" and 3) a 2015 final Rule (commonly referred to as the "CCR Rule") that amended 40 CFR §§257.50 – 257.107, "Standards for the Disposal of Coal Combustion Residuals in Landfills and Surface Impoundments."

In its June 2010 memo,[1] EPA identified 37 chemical parameters that had the potential to exist in relatively high concentrations in CCR effluent. Several years later, in the preamble to the 2015 CCR Rule, EPA identified 35 "Table 1"[2] chemical parameters that represented a hazard potential because they were characteristic of releases from coal combustion impoundments and may pose a toxicity risk potential. EPA performed further probabilistic analyses of the potential risks to human health and ecological receptors from the 35 Table 1 constituents and narrowed the list down to 23 "Table 2"[3] parameters (List of Chemical Constituents Retained for Probabilistic Analysis). These parameters include Aluminum, Antimony, Arsenic, Barium, Beryllium, Boron, Cadmium, Chloride, Chromium, Cobalt, Copper, Fluoride, Iron, Lead, Lithium, Mercury, Molybdenum, Nickel, Selenium, Silver, Thallium, Vanadium and Zinc.

Although the parameters listed in the CCR Rule Table 2 represent potential risks from CCR leachate releases, a conservative assumption was made that the probabilistic risks associated with leachate releases would be comparable to concerns associated with the release of CCR pore water. These 23 Table 2 constituents and all other constituents were classified in one of 4 categories for consideration.

---

1 United States Environmental Protection Agency, June 7, 2010 Memorandum from James A. Hanlon, Director, Office of Wastewater Management to Water Division Directors Regions 1 – 10; "National Pollutant Discharge Elimination System (NPDES) Permitting of Wastewater Discharges from Flue Gas Desulfurization (FGD) and Coal Combustion Residual (CCR) Impoundments at Steam Electric Power Plants," Attachment B, Water Quality-Based Effluent Limits, Coal Combustion Waste Impoundments; Appendix A, Steam Electric 2007/2008 Detailed Study Report, Ash Pond Effluent Concentrations.
2 Federal Register, Vol. 80, No. 74, Friday, April 17, 2015, "Table 1 – List of Chemical Constituents Evaluated in the CCR Risk Assessment," page 21449.
3 Federal Register, Vol. 80, No. 74, Friday, April 17, 2015, "Table 2 – List of Chemical Constituents Retained for Probabilistic Analysis," page 21450.

- **Category 1 - Table 2 constituents for which water quality criteria have been adopted in the Virginia Water Quality Standards regulation (9VAC25-260):** Water quality based effluent limitations were developed for these parameters regardless of whether or not the existing data for the facility demonstrated a reasonable potential to exceed the water quality criteria. Effluent limitations were developed in this fashion for Antimony, Arsenic, Cadmium, Chloride, Chromium (III and VI), Copper, Lead, Mercury, Nickel, Selenium, Silver, Thallium, and Zinc. There are no water quality criteria that are applicable to the aquatic life designation for Antimony or Thallium. For these parameters, the effluent limitation is equal to the most limiting allocation for human health.

- **Category 2 – Table 2 constituents for which water quality criteria have not be adopted in the the Virginia Water Quality Standards regulation (9VAC25-260):** A Whole Effluent Toxicity limitation was established in the absence of an applicable Virginia numeric water quality criterion. This approach is consistent with EPA's Technical Support Document for Water Quality-based Toxics Control and the June 7, 2010 EPA memorandum. Parameters included in this category include Aluminum, Barium, Beryllium, Boron, Cobalt, Iron, Molybdenum and Vanadium. Appendix J details the derivation of the calculated WET limitations that will be included with this permit action.

- **Category 3 – Constituents not listed in Table 2 for which water quality criteria have been adopted in the Virginia Water Quality Standards regulation (9VAC25-260):** A reasonable potential analysis was performed to determine the need for water-quality based effluent limitations on a case-by-case basis. The reasonable potential analysis included in Appendix E resulted in effluent limitations for Ammonia-N.

- **Category 4 – Federal Effluent Guidelines:** Technology-based effluent limits were assigned to applicable constituents addressed by the Federal Effluent Guidelines and not otherwise controlled by a more restrictive water quality-based effluent limitation. Constituents limited under this category include TSS, Oil & Grease, and pH.

For purposes of evaluating the parameters above, the combined discharge flow of 10.2912 MGD was utilized.

The dewatering wastewaters are to be managed to address the monitoring and effluent limitations established. The management of the dewatering wastewaters may include the use of interim treatment systems. The internal outfalls are designated as follows:

Outfall 501 - process wastewater from dewatering activities in the West Ash Pond
Outfall 502 - process wastewater from dewatering activities in the North Ash Pond
Outfall 503 - process wastewater from dewatering activities in the East Ash Ponds
Outfall 504 - combination of process wastewaters from dewatering activities in the North Ash Pond and the East Ash Ponds
Outfall 505 - process wastewater from dewatering activities in the Metal Cleaning Waste Treatment Basin

It is staff's best professional judgment that the effluent limits be applied to the discharges of dewatering wastewaters (Internal Outfalls 501, 502, 503, 504, and 505) rather than being applied at Outfalls 002, 003, 004, and 006. Meeting effluent limits at the internal outfalls will protect and maintain water quality at any of the outfalls identified as discharge options, while providing Dominion with the flexibility needed to achieve closure by the required deadline.

The permit contains an Outfall 999 that will be used for reporting of total flows for Internal Outfalls 501, 502, 503, 504, and 505.

EVALUATION OF THE EFFLUENT – TOXIC POLLUTANTS

Input parameters for instream WQC and WLAs

Stream: A Flow Frequency Determination for the receiving stream is included in Appendix B. Water quality data for the receiving stream were obtained from Ambient Water Quality Monitoring Station No. 2-JMS176.63 on the James River. The ambient station is located 0.52 river miles upstream of BPS.

Stream Parameter	Value	Units
Mean Hardness (as $CaCO_3$) =	62.5	mg/L
90th Percentile Temperature =	26.86	◦ C
90th Percentile Maximum pH =	8.03	SU
10th Percentile Maximum pH =	7.06	SU

Discharge: Temperature data were obtained from the 2015 application submitted by the permittee for Outfall 002. pH values were determined from DMR data. The mean hardness value was established based on best professional judgment and is considered to be a conservative characterization of the process wastewater generated during dewatering activities.

Discharge Parameter	Value	Units
Mean Hardness (as $CaCO_3$) =	70.1	mg/L
90th Percentile Temperature =	28.3	°C
90th Percentile Maximum pH =	8.3	SU
10th Percentile Maximum pH =	7.0	SU

WQC and WLAs were calculated for all WQS parameters. Those WQC and WLAs are presented in the MSTRANTI spreadsheet that can be found in Appendix G. The Category 1 parameters were analyzed per the protocol above. The Category 3 parameters were evaluated per the protocol below.

PROTOCOL FOR THE EVALUATION OF EFFLUENT TOXIC POLLUTANTS

Acute and Chronic WLAs (WLA_a and WLA_c) were analyzed according to the protocol below using a statistical approach (STAT.exe) to determine the necessity and magnitude of limits. Human Health WLAs (WLA_{hh}) were analyzed according to the same protocol through a simple comparison with the effluent data. If the WLA_{hh} exceeded the effluent datum or data mean, no limits were required. If the effluent datum or data mean exceeded the WLA_{hh}, the WLA_{hh} was imposed as the limit.

Since there are no data available for any toxic pollutants immediately upstream of this discharge, all upstream (background) pollutant concentrations are assumed to be "0".

The steps used in evaluating the effluent data are as follows:

A. If all data are reported as "below detection" or < the required Quantification Level (QL), and at least one detection level is ≤ the required QL, then the pollutant is considered to be not significantly present in the discharge and no further monitoring is required.

B. If all data are reported as "below detection", and all detection levels are > the required QL, then an evaluation is performed in which the pollutant is assumed present at the lowest reported detection level.

B.1. If the evaluation indicates that no limits are needed, then the existing data set is adequate and no further monitoring is required.

B.2. If the evaluation indicates that limits are needed, then the existing data set is inadequate to make a determination and additional monitoring is required.

C. If any data value is reported as detectable at or above the required QL, then the data are adequate to determine whether effluent limits are needed.

C.1. If the evaluation indicates that no limits are needed, then no further monitoring is required.

C.2. If the evaluation indicates that limits are needed, then the limits and associated requirements are specified in the draft permit.

C.3. (Exception for Metals data only) If the evaluation indicates that limits are needed, but the data are reported as a form other than "Dissolved" (except for Selenium), then the existing data set is inadequate to make a determination and additional monitoring is required.

Parameter	CASRN	QL (ug/L)	Data (ug/L unless noted otherwise)	Source of Data	Data Eval
MISCELLANEOUS					
Ammonia-N (mg/L)	766-41-7	0.2 mg/L	460	a	C.2
TRC (mg/L)	7782-50-5	0.1 mg/L	20 (default value)	---	C.2
Cyanide, Free	57-12-5	10.0	12	a	C.1

The **superscript "C"** following the parameter name indicates that the substance is a known or suspected carcinogen; human health criteria at risk level 10^{-5}.

CASRN = Chemical Abstract Service Registry Number for each parameter is referenced in the current Water Quality Standards. A unique numeric identifier designating only one substance. The Chemical Abstract Service is a division of the American Chemical Society.

"Source of Data" codes:
a = Table 3 Summary of dewatering wastewater, Application Addendum

"Data Evaluation" codes:
See section titled PROTOCOL FOR THE EVALUATION OF EFFLUENT TOXIC POLLUTANTS for an explanation of the code used.

STAT.EXE Results Output

Ammonia-N: Chronic averaging period = 30 WLAa = 14.1 WLAc = 12.4 Q.L. = 0.2 # samples/mo. = 4 # samples/wk. = 1 Summary of Statistics: # observations = 1 Expected Value = 460 Variance = 76176.0 C.V. = 0.6 97th percentile daily values = 1119.37 97th percentile 4 day average = 765.343 97th percentile 30 day average= 554.784 # < Q.L. = 0 Model used = BPJ Assumptions, type 2 data A limit is needed based on Acute Toxicity Maximum Daily Limit = 14.1 Average Weekly Limit = 14.1 Average Monthly Limit = 9.64053267821608 The data are: 460	**Arsenic, dissolved:** Chronic averaging period = 4 WLAa = 740 WLAc = 1500 Q.L. = 1 # samples/mo. = 4 # samples/wk. = 1 Summary of Statistics: # observations = 1 Expected Value = 740 Variance = 197136 C.V. = 0.6 97th percentile daily values = 1800.72 97th percentile 4 day average = 1231.20 97th percentile 30 day average= 892.479 # < Q.L. = 0 Model used = BPJ Assumptions, type 2 data A limit is needed based on Acute Toxicity Maximum Daily Limit = 740 Average Weekly Limit = 740.000000000001 Average Monthly Limit = 505.95703417588 The data are: 740
Cadmium, dissolved: Chronic averaging period = 4 WLAa = 6.6 WLAc = 7.7 Q.L. = 0.3 # samples/mo. = 4 # samples/wk. = 1 Summary of Statistics: # observations = 1 Expected Value = 6.6 Variance = 15.6816 C.V. = 0.6 97th percentile daily values = 16.0605 97th percentile 4 day average = 10.9810 97th percentile 30 day average= 7.95995 # < Q.L. = 0 Model used = BPJ Assumptions, type 2 data A limit is needed based on Acute Toxicity Maximum Daily Limit = 6.6 Average Weekly Limit = 6.6 Average Monthly Limit = 4.51258976427135 The data are: 6.6	**Chloride:** Chronic averaging period = 4 WLAa = 1900000 WLAc = 2200000 Q.L. = 1 # samples/mo. = 4 # samples/wk. = 1 Summary of Statistics: # observations = 1 Expected Value = 1900000 Variance = 1299600 C.V. = 0.6 97th percentile daily values = 4623493 97th percentile 4 day average = 3161201 97th percentile 30 day average= 2291501 # < Q.L. = 0 Model used = BPJ Assumptions, type 2 data A limit is needed based on Acute Toxicity Maximum Daily Limit = 1900000 Average Weekly Limit = 1900000 Average Monthly Limit = 1299078.87153266 The data are: 1900000

STAT.EXE Results Output

Chromium III, dissolved: Chronic averaging period = 4 WLAa = 1000 WLAc = 500 Q.L. = 0.5 # samples/mo. = 4 # samples/wk. = 1 Summary of Statistics: # observations = 1 Expected Value = 500 Variance = 90000 C.V. = 0.6 97th percentile daily values = 1216.70 97th percentile 4 day average = 831.895 97th percentile 30 day average= 603.026 # < Q.L. = 0 Model used = BPJ Assumptions, type 2 data A limit is needed based on Chronic Toxicity Maximum Daily Limit = 731.287392026616 Average Weekly Limit = 731.287392026616 Average Monthly Limit = 500 The data are: 500	**Chromium VI, dissolved:** Chronic averaging period = 4 WLAa = 35 WLAc = 110 Q.L. = 0.5 # samples/mo. = 4 # samples/wk. = 1 Summary of Statistics: # observations = 1 Expected Value = 35 Variance = 441 C.V. = 0.6 97th percentile daily values = 85.1696 97th percentile 4 day average = 58.2326 97th percentile 30 day average= 42.2118 # < Q.L. = 0 Model used = BPJ Assumptions, type 2 data A limit is needed based on Acute Toxicity Maximum Daily Limit = 35 Average Weekly Limit = 35 Average Monthly Limit = 23.9304002650754 The data are: 35
Copper, dissolved Chronic averaging period = 4 WLAa = 24 WLAc = 59 Q.L. = 0.5 # samples/mo. = 4 # samples/wk. = 1 Summary of Statistics: # observations = 1 Expected Value = 24 Variance = 207.36 C.V. = 0.6 97th percentile daily values = 58.4020 97th percentile 4 day average = 39.9309 97th percentile 30 day average= 28.9452 # < Q.L. = 0 Model used = BPJ Assumptions, type 2 data A limit is needed based on Acute Toxicity Maximum Daily Limit = 24 Average Weekly Limit = 24 Average Monthly Limit = 16.4094173246231 The data are: 24	**Lead, dissolved** Chronic averaging period = 4 WLAa = 190 WLAc = 73 Q.L. = 0.5 # samples/mo. = 4 # samples/wk. = 1 Summary of Statistics: # observations = 1 Expected Value = 73 Variance = 1918.44 C.V. = 0.6 97th percentile daily values = 177.639 97th percentile 4 day average = 121.456 97th percentile 30 day average= 88.0418 # < Q.L. = 0 Model used = BPJ Assumptions, type 2 data A limit is needed based on Chronic Toxicity Maximum Daily Limit = 106.767959235886 Average Weekly Limit = 106.767959235886 Average Monthly Limit = 73 The data are: 73

STAT.EXE Results Output

Mercury, dissolved: Chronic averaging period = 4 WLAa = 3 WLAc = 7.5 Q.L. = 1 # samples/mo. = 4 # samples/wk. = 1 Summary of Statistics: # observations = 1 Expected Value = 3 Variance = 3.24 C.V. = 0.6 97th percentile daily values = 7.30025 97th percentile 4 day average = 4.99137 97th percentile 30 day average= 3.61815 # < Q.L. = 0 Model used = BPJ Assumptions, type 2 data A limit is needed based on Acute Toxicity Maximum Daily Limit = 3 Average Weekly Limit = 3 Average Monthly Limit = 2.05117716557789 The data are: 3	**Nickel, dissolved:** Chronic averaging period = 4 WLAa = 330 WLAc = 130 Q.L. = 0.5 # samples/mo. = 4 # samples/wk. = 1 Summary of Statistics: # observations = 1 Expected Value = 130 Variance = 6084 C.V. = 0.6 97th percentile daily values = 316.344 97th percentile 4 day average = 216.292 97th percentile 30 day average= 156.786 # < Q.L. = 0 Model used = BPJ Assumptions, type 2 data A limit is needed based on Chronic Toxicity Maximum Daily Limit = 190.13472192692 Average Weekly Limit = 190.13472192692 Average Monthly Limit = 130 The data are: 130
Selenium, total recoverable: Chronic averaging period = 4 WLAa = 43 WLAc = 48 Q.L. = 2 # samples/mo. = 4 # samples/wk. = 1 Summary of Statistics: # observations = 1 Expected Value = 43 Variance = 665.64 C.V. = 0.6 97th percentile daily values = 104.636 97th percentile 4 day average = 71.5429 97th percentile 30 day average= 51.8602 # < Q.L. = 0 Model used = BPJ Assumptions, type 2 data A limit is needed based on Acute Toxicity Maximum Daily Limit = 43 Average Weekly Limit = 43 Average Monthly Limit = 29.4002060399497 The data are: 43	**Silver, dissolved:** Chronic averaging period = 4 WLAa = 5.1 WLAc = Q.L. = 0.2 # samples/mo. = 4 # samples/wk. = 1 Summary of Statistics: # observations = 1 Expected Value = 5.1 Variance = 9.3636 C.V. = 0.6 97th percentile daily values = 12.4104 97th percentile 4 day average = 8.48532 97th percentile 30 day average= 6.15087 # < Q.L. = 0 Model used = BPJ Assumptions, type 2 data A limit is needed based on Acute Toxicity Maximum Daily Limit = 5.1 Average Weekly Limit = 5.1 Average Monthly Limit = 3.48700118148241 The data are: 5.1

STAT.EXE Results Output

Total Residual Chlorine:	**Zinc, dissolved:**
Chronic averaging period = 4 WLAa = 0.041 WLAc = 0.11 Q.L. = 0.1 # samples/mo. = 30 # samples/wk. = 7 Summary of Statistics: # observations = 1 Expected Value = 20 Variance = 144 C.V. = 0.6 97th percentile daily values = 48.6683 97th percentile 4 day average = 33.2758 97th percentile 30 day average= 24.1210 # < Q.L. = 0 Model used = BPJ Assumptions, type 2 data A limit is needed based on Acute Toxicity Maximum Daily Limit = 0.041 Average Weekly Limit = 2.50389954768332E-02 Average Monthly Limit = 2.03204677185748E-02 The data are: 20	Chronic averaging period = 4 WLAa = 210 WLAc = 780 Q.L. = 2 # samples/mo. = 4 # samples/wk. = 1 Summary of Statistics: # observations = 1 Expected Value = 210 Variance = 15876 C.V. = 0.6 97th percentile daily values = 511.017 97th percentile 4 day average = 349.395 97th percentile 30 day average= 253.271 # < Q.L. = 0 Model used = BPJ Assumptions, type 2 data A limit is needed based on Acute Toxicity Maximum Daily Limit = 210 Average Weekly Limit = 210 Average Monthly Limit = 143.582401590452 The data are: 210

Outfall 999 **Final Limits** **Combined Flow: 10.2912 MGD**

PARAMETER	BASIS FOR LIMITS	EFFLUENT LIMITATIONS		MONITORING REQUIREMENTS	
		Monthly Average	Maximum	Frequency	Sample Type
Flow (MGD)	1	NL	NL	1/Month	Calculated

NL = No Limitation, monitoring required *NA = Not Applicable*

Outfall 999 is not an existing discharge point. It is a means of reporting total flow discharged through Internal Outfalls 501, 502, 503, 504, and 505 during the dewatering activities.

APPENDIX F

FINAL CONFIGURATION
OUTFALL 002 (WEST TREATMENT POND)

A comparison of technology and water quality-based limits was performed, and the most stringent limits were selected. The selected limits are summarized in the table below.

Outfall 002 **Final Limits** **Flow: 4.2912 MGD**

PARAMETER	BASIS FOR LIMITS	EFFLUENT LIMITATIONS		MONITORING REQUIREMENTS	
		Monthly Average	Maximum	Frequency	Sample Type
Flow (MGD)	1	NL	NL	1/Month	Estimate
---------	---------	Monthly Average	Daily Maximum	---------	---------
TSS	3	30.0 mg/L	100.0 mg/L	1/Month	Grab
Oil & Grease (mg/L)	3	15.0	20.0	1/Month	Grab
Total Residual Chlorine (TRC) (mg/L)	2	0.036	0.072	1/Month	Grab
TKN (mg/L)	4	NA	NL	1/Year	Grab
Nitrite-N + Nitrate-N (mg/L)	4	NA	NL	1/Year	Grab
Total Nitrogen (mg/L)	4	NA	NL	1/Year	Calculated
Total Phosphorus (mg/L)	4	NA	NL	1/Year	Grab
---------	---------	Minimum	Maximum	---------	---------
pH	2,3	6.0 SU	9.0 SU	1/Month	Grab

NL = No Limitation, monitoring required *NA = Not Applicable*
1/Year = Annual sampling with the results submitted with the DMR due January 10th of each year
Total Nitrogen, which is the sum of TKN and Nitrite-N + Nitrate-N shall be derived from the results of those tests.

BASIS DESCRIPTIONS
1. VPDES Permit Regulation (9VAC25-31)
2. Water Quality Standards (9VA 25-260)
3. Federal Effluent Limitation Guidelines (Steam Electric Power Generating Point Source Category – 40 CFR Part 423)
4. Guidance Memo No. 14-2011

APPENDIX A contains a One Line Diagram which lists all of the sources of wastewater which will be directed to the West Treatment Pond under the final configuration.

As presented below, the effluent limits and monitoring determined to be necessary for Outfall 002 (West Treatment Pond Final Configuration) are identical to the limits and monitoring determined to be necessary for the combined Outfall 002/004 discharge; therefore, the Outfall 002 limits and monitoring applicable to both scenarios are contained in only one effluent limit page (Part I.A.5) in the permit.

EFFLUENT LIMITATIONS GUIDELINES:
The final effluent limitations guidelines and standards for the steam electric power generating industry were signed by the EPA Administrator on September 30, 2015. The final rule will become effective on November 29, 2015.

The West Ash Pond will be clean closed and all ash will be removed. A portion of the former West Ash Pond footprint will be lined and repurposed as a lined West Treatment Pond; however, the West Treatment Pond may be used to receive treated contact stormwater and dewatering water from the closure activities.

The final ELGs zero discharge requirement eliminates the generation of fly ash transport water but does not eliminate fly ash transport water that has already been transferred to a surface impoundment. In order to address this issue, the ELGs specify that the discharge of legacy fly ash transport water is subject to the existing Best Practicable Control Technology currently available (BPT).

Fly Ash and Bottom Ash are defined in the Steam Electric Power Generating ELGs at 40 CFR Part 423.11 (e) and (f).

ELGs for Best Practicable Control Technology Currently Available (BPT) for Fly Ash and Bottom Ash transport water in 40 CFR Part 423.12(b)(4) are as follows:

Parameter	Daily Maximum	Maximum Monthly Average
TSS	100.0 mg/L	30.0 mg/L
Oil & Grease	20.0 mg/L	15.0 mg/L

Low volume waste sources are defined in the Steam Electric Power Generating ELGs at 40 CFR Part 423.11 (b).

ELGs for Best Practicable Control Technology Currently Available (BPT) for low volume waste sources in 40 CFR Part 423.12(b)(3) are as follows:

Parameter	Daily Maximum	Maximum Monthly Average
TSS	100.0 mg/L	30.0 mg/L
Oil & Grease	20.0 mg/L	15.0 mg/L

pH – BPT limits are 6.0 to 9.0 SU for all discharges except once-through cooling water in accordance with 40 CFR Part 423.12(b)(1).

At the permitting authority's discretion (Federal Effluent Guidelines (40 CFR 423.12(b)(11)), the quantity of pollutants allowed to be discharged may be expressed as a concentration limit instead of the mass based limit specified in paragraph 423.12(b). It is staff's best professional judgment that applying the maximum concentrations and the average concentrations for TSS and Oil & Grease to the discharge will maintain and protect the water quality of the receiving stream.

Limits for low volume wastes are not applied to the Stormwater Management Pond because additional treatment for these parameters is provided in the West Treatment Pond.

EVALUATION OF THE EFFLUENT – TOXIC POLLUTANTS

Input parameters for WQC and WLAs

Stream: A Flow Frequency Determination for the receiving stream is included in Appendix B. Water quality data for the receiving stream were obtained from Ambient Water Quality Monitoring Station No. 2-JMS176.63 on the James River. The ambient station is located 0.52 river miles upstream of BPS.

Stream Parameter	**Value**	**Units**
Mean Hardness (as $CaCO_3$) =	62.5	mg/L
90th Percentile Temperature =	26.86	◦ C
90th Percentile Maximum pH =	8.03	SU
10th Percentile Maximum pH =	7.06	SU

Discharge: Temperature and hardness data were obtained from the 2015 application submitted by the permittee for Outfall 002. pH data were determined from DMR data.

Discharge Parameter	Value	Units
Mean Hardness (as $CaCO_3$) =	70.1	mg/L
90th Percentile Temperature =	28.3	°C
90th Percentile Maximum pH =	8.3	SU
10th Percentile Maximum pH =	7.0	SU

WQC and WLAs were calculated for all WQS parameters. Those WQC and WLAs are presented in the MSTRANTI spreadsheet that can be found in Appendix G. The effluent data were analyzed per the protocol for evaluation of effluent toxic pollutants included in this appendix with the following results:

- TRC – Limits are required for TRC to address the discharge of chlorinated sanitary wastewater to the Stormwater Management Pond which ultimately discharges to the West Treatment Pond. For permitting purposes, the slightly more stringent TRC limits determined to be protective for the combined 002/004 discharge were imposed for Outfall 002 (final configuration).
- A complete WQS toxics scan has been required for the new lined West Treatment Pond. This monitoring must be initiated within one year of the West Treatment Pond beginning operation in its final configuration and must be reported using Attachment B of the permit.

PROTOCOL FOR THE EVALUATION OF EFFLUENT TOXIC POLLUTANTS

Toxic pollutants were evaluated in accordance with OWP Guidance Memo No. 00-2011. Acute and Chronic WLAs (WLA_a and WLA_c) were analyzed according to the protocol below using a statistical approach (STAT.exe) to determine the necessity and magnitude of limits. Human Health WLAs (WLA_{hh}) were analyzed according to the same protocol through a simple comparison with the effluent data. If the WLA_{hh} exceeded the effluent datum or data mean, no limits were required. If the effluent datum or data mean exceeded the WLA_{hh}, the WLA_{hh} was imposed as the limit.

Since there are no data available for any toxic pollutants immediately upstream of this discharge, all upstream (background) pollutant concentrations are assumed to be "0".

The steps used in evaluating the effluent data are as follows:

A. If all data are reported as "below detection" or < the required Quantification Level (QL), and at least one detection level is ≤ the required QL, then the pollutant is considered to be not significantly present in the discharge and no further monitoring is required.

B. If all data are reported as "below detection", and all detection levels are > the required QL, then an evaluation is performed in which the pollutant is assumed present at the lowest reported detection level.

   B.1. If the evaluation indicates that no limits are needed, then the existing data set is adequate and no further monitoring is required.
   B.2. If the evaluation indicates that limits are needed, then the existing data set is inadequate to make a determination and additional monitoring is required.

C. If any data value is reported as detectable at or above the required QL, then the data are adequate to determine whether effluent limits are needed.

   C.1. If the evaluation indicates that no limits are needed, then no further monitoring is required.
   C.2. If the evaluation indicates that limits are needed, then the limits and associated requirements are specified in the draft permit.
   C.3. (Exception for Metals data only) If the evaluation indicates that limits are needed, but the data are reported as a form other than "Dissolved" (except for Selenium), then the existing data set is inadequate to make a determination and additional monitoring is required.

Parameter	CASRN	QL (ug/L)	Data (ug/L unless noted otherwise)	Source of Data	Data Eval
METALS					
Antimony, dissolved	7440-36-0	0.2	No data. Testing required.	---	---
Arsenic, dissolved	7440-38-2	1.0	No data. Testing required.	---	---
Barium, dissolved	7440-39-3	---	Applicable to PWS waters only	---	---
Cadmium, dissolved	7440-43-9	0.3	No data. Testing required.	---	---
Chromium III, dissolved	16065-83-1	0.5	No data. Testing required.	---	---
Chromium VI, dissolved	18540-29-9	0.5	No data. Testing required.	---	---
Chromium, Total	7440-47-3	---	Applicable to PWS waters only	---	---
Copper, dissolved	7440-50-8	0.5	No data. Testing required.	---	---
Iron, dissolved	7439-89-6	1.0	Applicable to PWS waters only	---	---
Lead, dissolved	7439-92-1	0.5	No data. Testing required.	---	---
Manganese, dissolved	7439-96-5	0.2	Applicable to PWS waters only	---	---
Mercury, dissolved	7439-97-6	1.0	No data. Testing required.	---	---
Nickel, dissolved	7440-02-0	0.5	No data. Testing required.	---	---
Selenium, total recoverable	7782-49-2	2.0	No data. Testing required.	---	---
Silver, dissolved	7440-22-4	0.2	No data. Testing required.	---	---
Thallium, dissolved	7440-28-0	---	No data. Testing required.	---	---
Zinc, dissolved	7440-66-6	2.0	No data. Testing required.	---	---
PESTICIDES/PCBS					
Aldrin [C]	309-00-2	0.05	No data. Testing required.	---	---
Chlordane [C]	57-74-9	0.2	No data. Testing required.	---	---
Chlorpyrifos	2921-88-2	---	No data. Testing required.	---	---
DDD [C]	72-54-8	0.1	No data. Testing required.	---	---
DDE [C]	72-55-9	0.1	No data. Testing required.	---	---
DDT [C]	50-29-3	0.1	No data. Testing required.	---	---
Demeton	8065-48-3	---	No data. Testing required.	---	---
Diazinon	333-41-5	---	No data. Testing required.	---	---
Dieldrin [C]	60-57-1	0.1	No data. Testing required.	---	---
Alpha-Endosulfan	959-98-8	0.1	No data. Testing required.	---	---
Beta-Endosulfan	33213-65-9	0.1	No data. Testing required.	---	---
Alpha-Endosulfan + Beta-Endosulfan		---	No data. Testing required.	---	---
Endosulfan Sulfate	1031-07-8	0.1	No data. Testing required.	---	---
Endrin	72-20-8	0.1	No data. Testing required.	---	---
Endrin Aldehyde	7421-93-4	---	No data. Testing required.	---	---
Guthion	86-50-0	---	No data. Testing required.	---	---
Heptachlor [C]	76-44-8	0.05	No data. Testing required.	---	---
Heptachlor Epoxide [C]	1024-57-3	---	No data. Testing required.	---	---
Hexachlorocyclohexane Alpha-BHC [C]	319-84-6	---	No data. Testing required.	---	---
Hexachlorocyclohexane Beta-BHC [C]	319-85-7	---	No data. Testing required.	---	---
Hexachlorocyclohexane Gamma-BHC (synonym = Lindane)	58-89-9	---	No data. Testing required.	---	---
Kepone	143-50-0	---	No data. Testing required.	---	---
Malathion	121-75-5	---	No data. Testing required.	---	---
Methoxychlor	72-43-5	---	No data. Testing required.	---	---
Mirex	2385-85-5	---	No data. Testing required.	---	---

Parameter	CASRN	QL (ug/L)	Data (ug/L unless noted otherwise)	Source of Data	Data Eval
Parathion	56-38-2	---	No data. Testing required.	---	---
PCB Total [C]	1336-36-3	7.0	No data. Testing required.	---	---
Toxaphene [C]	8001-35-2	5.0	No data. Testing required.	---	---
BASE NEUTRAL EXTRACTABLES					
Acenaphthene	83-32-9	10.0	No data. Testing required.	---	---
Anthracene	120-12-7	10.0	No data. Testing required.	---	---
Benzidine [C]	92-87-5	---	No data. Testing required.	---	---
Benzo (a) anthracene [C]	56-55-3	10.0	No data. Testing required.	---	---
Benzo (b) fluoranthene [C]	205-99-2	10.0	No data. Testing required.	---	---
Benzo (k) fluoranthene [C]	207-08-9	10.0	No data. Testing required.	---	---
Benzo (a) pyrene [C]	50-32-8	10.0	No data. Testing required.	---	---
Bis 2-Chloroethyl Ether [C]	111-44-4	---	No data. Testing required.	---	---
Bis 2-Chloroisopropyl Ether	108-60-1	---	No data. Testing required.	---	---
Bis-2-Ethylhexyl Phthalate [C]	117-81-7	10.0	No data. Testing required.	---	---
Butyl benzyl phthalate	85-68-7	10.0	No data. Testing required.	---	---
2-Chloronaphthalene	91-58-7	---	No data. Testing required.	---	---
Chrysene [C]	218-01-9	10.0	No data. Testing required.	---	---
Dibenz(a,h)anthracene [C]	53-70-3	20.0	No data. Testing required.	---	---
1,2-Dichlorobenzene	95-50-1	10.0	No data. Testing required.	---	---
1,3-Dichlorobenzene	541-73-1	10.0	No data. Testing required.	---	---
1,4-Dichlorobenzene	106-46-7	10.0	No data. Testing required.	---	---
3,3-Dichlorobenzidine [C]	91-94-1	---	No data. Testing required.	---	---
Diethyl phthalate	84-66-2	10.0	No data. Testing required.	---	---
Dimethyl phthalate	131-11-3	---	No data. Testing required.	---	---
Di-n-Butyl Phthalate	84-74-2	10.0	No data. Testing required.	---	---
2,4-Dinitrotoluene	121-14-2	10.0	No data. Testing required.	---	---
1,2-Diphenylhydrazine [C]	122-66-7	---	No data. Testing required.	---	---
Fluoranthene	206-44-0	10.0	No data. Testing required.	---	---
Fluorene	86-73-7	10.0	No data. Testing required.	---	---
Hexachlorobenzene [C]	118-74-1	---	No data. Testing required.	---	---
Hexachlorobutadiene [C]	87-68-3	---	No data. Testing required.	---	---
Hexachlorocyclopentadiene	77-47-4	---	No data. Testing required.	---	---
Hexachloroethane [C]	67-72-1	---	No data. Testing required.	---	---
Indeno(1,2,3-cd)pyrene [C]	193-39-5	20.0	No data. Testing required.	---	---
Isophorone [C]	78-59-1	10.0	No data. Testing required.	---	---
Nitrobenzene	98-95-3	10.0	No data. Testing required.	---	---
N-Nitrosodimethylamine [C]	62-75-9	---	No data. Testing required.	---	---
N-Nitrosodi-n-propylamine [C]	621-64-7	---	No data. Testing required.	---	---
N-Nitrosodiphenylamine [C]	86-30-6	---	No data. Testing required.	---	---
Pyrene	129-00-0	10.0	No data. Testing required.	---	---
1,2,4-Trichlorobenzene	120-82-1	10.0	No data. Testing required.	---	---
VOLATILES					
Acrolein	107-02-8	---	No data. Testing required.	---	---
Acrylonitrile [C]	107-13-1	---	No data. Testing required.	---	---
Benzene [C]	71-43-2	10.0	No data. Testing required.	---	---

Parameter	CASRN	QL (ug/L)	Data (ug/L unless noted otherwise)	Source of Data	Data Eval
Bromoform [C]	75-25-2	10.0	No data. Testing required.	---	---
Carbon Tetrachloride [C]	56-23-5	10.0	No data. Testing required.	---	---
Chlorobenzene	108-90-7	50.0	No data. Testing required.	---	---
Chlorodibromomethane [C]	124-48-1	10.0	No data. Testing required.	---	---
Chloroform	67-66-3	10.0	No data. Testing required.	---	---
Dichlorobromomethane [C]	75-27-4	10.0	No data. Testing required.	---	---
1,2-Dichloroethane [C]	107-06-2	10.0	No data. Testing required.	---	---
1,1-Dichloroethylene	75-35-4	10.0	No data. Testing required.	---	---
1,2-trans-dichloroethylene	156-60-5	---	No data. Testing required.	---	---
1,2-Dichloropropane [C]	78-87-5	---	No data. Testing required.	---	---
1,3-Dichloropropene [C]	542-75-6	---	No data. Testing required.	---	---
Ethylbenzene	100-41-4	10.0	No data. Testing required.	---	---
Methyl Bromide	74-83-9	---	No data. Testing required.	---	---
Methylene Chloride [C]	75-09-2	20.0	No data. Testing required.	---	---
1,1,2,2-Tetrachloroethane [C]	79-34-5	---	No data. Testing required.	---	---
Tetrachloroethylene	127-18-4	10.0	No data. Testing required.	---	---
Toluene	10-88-3	10.0	No data. Testing required.	---	---
1,1,2-Trichloroethane [C]	79-00-5	---	No data. Testing required.	---	---
Trichloroethylene [C]	79-01-6	10.0	No data. Testing required.	---	---
Vinyl Chloride [C]	75-01-4	10.0	No data. Testing required.	---	---
RADIONUCLIDES					
Beta Particle & Photon Activity (mrem/yr)	N/A	---	Applicable to PWS waters only	---	---
Combined Radium 226 and 228 (pCi/L)	N/A	---	Applicable to PWS waters only	---	---
Gross Alpha Particle Activity (pCi/L)	N/A	---	Applicable to PWS waters only	---	---
Uranium	N/A	---	Applicable to PWS waters only	---	---
ACID EXTRACTABLES					
2-Chlorophenol	95-57-8	10.0	No data. Testing required.	---	---
2,4-Dichlorophenol	120-83-2	10.0	No data. Testing required.	---	---
2,4-Dimethylphenol	105-67-9	10.0	No data. Testing required.	---	---
2,4-Dinitrophenol	51-28-5	---	No data. Testing required.	---	---
2-Methyl-4,6-Dinitrophenol	534-52-1	---	No data. Testing required.	---	---
Nonylphenol	104-40-51	---	No data. Testing required.	---	---
Pentachlorophenol [C]	87-86-5	50.0	No data. Testing required.	---	---
Phenol	108-95-2	10.0	No data. Testing required.	---	---
2,4,6-Trichlorophenol [C]	88-06-2	10.0	No data. Testing required.	---	---
MISCELLANEOUS					
Ammonia-N (mg/L)	766-41-7	0.2 mg/L	No data. Testing required.	---	---
Chloride (mg/L)	16887-00-6	---	No data. Testing required.	---	---
TRC (mg/L)	7782-50-5	0.1 mg/L	20 mg/L (Default)	---	C.2
Cyanide, Free	57-12-5	10.0	No data. Testing required.	---	---
2,4-Dichlorophenoxy acetic acid (synonym = 2,4-D)	94-75-7	---	Applicable to PWS waters only	---	---
Dioxin (2,3,7,8-tetrachlorodibenzo-p-dioxin)(ppq)	1746-01-6	0.01	Applicable to Paper Mills & Oil Refineries only	---	---
Foaming Agents (as MBAS)	N/A	---	Applicable to PWS waters only	---	---

Parameter	CASRN	QL (ug/L)	Data (ug/L unless noted otherwise)	Source of Data	Data Eval
Sulfide, dissolved	18496-25-8	100	No data. Testing required.	---	---
Nitrate as N (mg/L)	14797-55-8	---	Applicable to PWS waters only	---	---
Sulfate (mg/L)	N/A	---	Applicable to PWS waters only	---	---
Total Dissolved Solids (mg/L)	N/A	---	Applicable to PWS waters only	---	---
Tributyltin	60-10-5	---	No data. Testing required.	---	---
2-(2,4,5-Trichlorophenoxy) propionic acid (synonym = Silvex)	93-72-1	---	Applicable to PWS waters only	---	---
Hardness (mg/L as $CaCO_3$)	471-34-1	---	No data. Testing required.	---	---

The **superscript "C"** following the parameter name indicates that the substance is a known or suspected carcinogen; human health criteria at risk level 10^{-5}.

CASRN = Chemical Abstract Service Registry Number for each parameter is referenced in the current Water Quality Standards. A unique numeric identifier designating only one substance. The Chemical Abstract Service is a division of the American Chemical Society.

"Data Evaluation" codes:
See section titled PROTOCOL FOR THE EVALUATION OF EFFLUENT TOXIC POLLUTANTS for an explanation of the code used.

STAT.EXE Results Output

Total Residual Chlorine:
Chronic averaging period = 4
WLAa = 0.077
WLAc = 0.26
Q.L. = 0.1
# samples/mo. = 30
# samples/wk. = 7

Summary of Statistics:
observations = 1
Expected Value = 20
Variance = 144
C.V. = 0.6
97th percentile daily values = 48.6683
97th percentile 4 day average = 33.2758
97th percentile 30 day average= 24.1210
< Q.L. = 0
Model used = BPJ Assumptions, type 2 data

A limit is needed based on Acute Toxicity
Maximum Daily Limit = 0.077
Average Weekly Limit = 4.70244549199062E-02
Average Monthly Limit = 3.81628296178113E-02

The data are: 20

APPENDIX G

MISTRANTI RESULTS

- **OUTFALL 001 (ONCE-THROUGH CONDENSER COOLING WATER)**
- **OUTFALLS 002 and 004**
- **INTERNAL OUTFALLS 501, 502, 503, 504, AND 505 DURING DEWATERING ACTIVITIES**
- **OUTFALL 002 (WEST TREATMENT POND) FINAL CONFIGURATION**

FRESHWATER
WATER QUALITY CRITERIA / WASTELOAD ALLOCATION ANALYSIS

Facility Name: BPS Outfall 001 Permit No.: VA0004138

Receiving Stream: James River Version: OWP Guidance Memo 00-2011 (8/24/00)

Stream Information		
Mean Hardness (as CaCO3) =	62.5	mg/L
90% Temperature (Annual) =	26.86	deg C
90% Temperature (Wet season) =		deg C
90% Maximum pH =	8.03	SU
10% Maximum pH =	7.06	SU
Tier Designation (1 or 2) =	1	
Public Water Supply (PWS) Y/N? =	N	
Trout Present Y/N? =	N	
Early Life Stages Present Y/N? =	Y	

Stream Flows		
1Q10 (Annual) =	179	MGD
7Q10 (Annual) =	227	MGD
30Q10 (Annual) =	318	MGD
1Q10 (Wet season) =		MGD
30Q10 (Wet season) =		MGD
30Q5 =	380	MGD
Harmonic Mean =	1391	MGD

Mixing Information		
Annual - 1Q10 Mix =	3.4	%
- 7Q10 Mix =	100	%
- 30Q10 Mix =	100	%
Wet Season - 1Q10 Mix =		%
- 30Q10 Mix =		%

Effluent Information		
Mean Hardness (as CaCO3) =	62.5	mg/L
90% Temp (Annual) =		deg C
90% Temp (Wet season) =		deg C
90% Maximum pH =		SU
10% Maximum pH =		SU
Discharge Flow =	157.6	MGD

Parameter	Background	Water Quality Criteria				Wasteload Allocations				Antidegradation Baseline				Antidegradation Allocations				**Most Limiting Allocations**			
(ug/l unless noted)	Conc.	Acute	Chronic	HH (PWS)	HH	Acute	Chronic	HH (PWS)	HH	Acute	Chronic	HH (PWS)	HH	Acute	Chronic	HH (PWS)	HH	**Acute**	**Chronic**	**HH (PWS)**	**HH**
Acenapthene	0	--	--	na	9.9E+02	--	--	na	3.4E+03	--	--	--	--	--	--	--	--	**--**	**--**	**na**	**3.4E+03**
Acrolein	0	--	--	na	9.3E+00	--	--	na	3.2E+01	--	--	--	--	--	--	--	--	**--**	**--**	**na**	**3.2E+01**
Acrylonitrile[C]	0	--	--	na	2.5E+00	--	--	na	2.5E+01	--	--	--	--	--	--	--	--	**--**	**--**	**na**	**2.5E+01**
Aldrin [C]	0	3.0E+00	--	na	5.0E-04	3.1E+00	--	na	4.9E-03	--	--	--	--	--	--	--	--	**3.1E+00**	**--**	**na**	**4.9E-03**
Ammonia-N (mg/l) (Yearly)	0	5.84E+01	5.68E+00	na	--	6.07E+01	1.71E+01	na	--	--	--	--	--	--	--	--	--	**6.07E+01**	**1.71E+01**	**na**	**--**
Ammonia-N (mg/l) (High Flow)	0	5.84E+01	7.09E+00	na	--	5.84E+01	7.09E+00	na	--	--	--	--	--	--	--	--	--	**5.84E+01**	**7.09E+00**	**na**	**--**
Anthracene	0	--	--	na	4.0E+04	--	--	na	1.4E+05	--	--	--	--	--	--	--	--	**--**	**--**	**na**	**1.4E+05**
Antimony	0	--	--	na	6.4E+02	--	--	na	2.2E+03	--	--	--	--	--	--	--	--	**--**	**--**	**na**	**2.2E+03**
Arsenic	0	3.4E+02	1.5E+02	na	--	3.5E+02	3.7E+02	na	--	--	--	--	--	--	--	--	--	**3.5E+02**	**3.7E+02**	**na**	**--**
Barium	0	--	--	na	--	--	--	na	--	--	--	--	--	--	--	--	--	**--**	**--**	**na**	**--**
Benzene [C]	0	--	--	na	5.1E+02	--	--	na	5.0E+03	--	--	--	--	--	--	--	--	**--**	**--**	**na**	**5.0E+03**
Benzidine[C]	0	--	--	na	2.0E-03	--	--	na	2.0E-02	--	--	--	--	--	--	--	--	**--**	**--**	**na**	**2.0E-02**
Benzo (a) anthracene [C]	0	--	--	na	1.8E-01	--	--	na	1.8E+00	--	--	--	--	--	--	--	--	**--**	**--**	**na**	**1.8E+00**
Benzo (b) fluoranthene [C]	0	--	--	na	1.8E-01	--	--	na	1.8E+00	--	--	--	--	--	--	--	--	**--**	**--**	**na**	**1.8E+00**
Benzo (k) fluoranthene [C]	0	--	--	na	1.8E-01	--	--	na	1.8E+00	--	--	--	--	--	--	--	--	**--**	**--**	**na**	**1.8E+00**
Benzo (a) pyrene [C]	0	--	--	na	1.8E-01	--	--	na	1.8E+00	--	--	--	--	--	--	--	--	**--**	**--**	**na**	**1.8E+00**
Bis2-Chloroethyl Ether [C]	0	--	--	na	5.3E+00	--	--	na	5.2E+01	--	--	--	--	--	--	--	--	**--**	**--**	**na**	**5.2E+01**
Bis2-Chloroisopropyl Ether	0	--	--	na	6.5E+04	--	--	na	2.2E+05	--	--	--	--	--	--	--	--	**--**	**--**	**na**	**2.2E+05**
Bis 2-Ethylhexyl Phthalate [C]	0	--	--	na	2.2E+01	--	--	na	2.2E+02	--	--	--	--	--	--	--	--	**--**	**--**	**na**	**2.2E+02**
Bromoform [C]	0	--	--	na	1.4E+03	--	--	na	1.4E+04	--	--	--	--	--	--	--	--	**--**	**--**	**na**	**1.4E+04**
Butylbenzylphthalate	0	--	--	na	1.9E+03	--	--	na	6.5E+03	--	--	--	--	--	--	--	--	**--**	**--**	**na**	**6.5E+03**
Cadmium	0	2.3E+00	7.8E-01	na	--	2.4E+00	1.9E+00	na	--	--	--	--	--	--	--	--	--	**2.4E+00**	**1.9E+00**	**na**	**--**
Carbon Tetrachloride [C]	0	--	--	na	1.6E+01	--	--	na	1.6E+02	--	--	--	--	--	--	--	--	**--**	**--**	**na**	**1.6E+02**
Chlordane [C]	0	2.4E+00	4.3E-03	na	8.1E-03	2.5E+00	1.0E-02	na	8.0E-02	--	--	--	--	--	--	--	--	**2.5E+00**	**1.0E-02**	**na**	**8.0E-02**
Chloride	0	8.6E+05	2.3E+05	na	--	8.9E+05	5.6E+05	na	--	--	--	--	--	--	--	--	--	**8.9E+05**	**5.6E+05**	**na**	**--**
TRC	0	1.9E+01	1.1E+01	na	--	2.0E+01	2.7E+01	na	--	--	--	--	--	--	--	--	--	**2.0E+01**	**2.7E+01**	**na**	**--**
Chlorobenzene	0	--	--	na	1.6E+03	--	--	na	5.5E+03	--	--	--	--	--	--	--	--	**--**	**--**	**na**	**5.5E+03**

Parameter	Background	Water Quality Criteria				Wasteload Allocations				Antidegradation Baseline				Antidegradation Allocations				**Most Limiting Allocations**			
(ug/l unless noted)	Conc.	Acute	Chronic	HH (PWS)	HH	Acute	Chronic	HH (PWS)	HH	Acute	Chronic	HH (PWS)	HH	Acute	Chronic	HH (PWS)	HH	**Acute**	**Chronic**	**HH (PWS)**	**HH**
Chlorodibromomethane[C]	0	--	--	na	1.3E+02	--	--	na	1.3E+03	--	--	--	--	--	--	--	--	**--**	**--**	**na**	**1.3E+03**
Chloroform	0	--	--	na	1.1E+04	--	--	na	3.8E+04	--	--	--	--	--	--	--	--	**--**	**--**	**na**	**3.8E+04**
2-Chloronaphthalene	0	--	--	na	1.6E+03	--	--	na	5.5E+03	--	--	--	--	--	--	--	--	**--**	**--**	**na**	**5.5E+03**
2-Chlorophenol	0	--	--	na	1.5E+02	--	--	na	5.1E+02	--	--	--	--	--	--	--	--	**--**	**--**	**na**	**5.1E+02**
Chlorpyrifos	0	8.3E-02	4.1E-02	na	--	8.6E-02	1.0E-01	na	--	--	--	--	--	--	--	--	--	**8.6E-02**	**1.0E-01**	**na**	**--**
Chromium III	0	3.9E+02	5.0E+01	na	--	4.0E+02	1.2E+02	na	--	--	--	--	--	--	--	--	--	**4.0E+02**	**1.2E+02**	**na**	**--**
Chromium VI	0	1.6E+01	1.1E+01	na	--	1.7E+01	2.7E+01	na	--	--	--	--	--	--	--	--	--	**1.7E+01**	**2.7E+01**	**na**	**--**
Chromium, Total	0	--	--	1.0E+02	--	--	--	na	--	--	--	--	--	--	--	--	--	**--**	**--**	**na**	**--**
Chrysene [C]	0	--	--	na	1.8E-02	--	--	na	1.8E-01	--	--	--	--	--	--	--	--	**--**	**--**	**na**	**1.8E-01**
Copper	0	8.6E+00	6.0E+00	na	--	9.0E+00	1.5E+01	na	--	--	--	--	--	--	--	--	--	**9.0E+00**	**1.5E+01**	**na**	**--**
Cyanide, Free	0	2.2E+01	5.2E+00	na	1.6E+04	2.3E+01	1.3E+01	na	5.5E+04	--	--	--	--	--	--	--	--	**2.3E+01**	**1.3E+01**	**na**	**5.5E+04**
DDD [C]	0	--	--	na	3.1E-03	--	--	na	3.0E-02	--	--	--	--	--	--	--	--	**--**	**--**	**na**	**3.0E-02**
DDE [C]	0	--	--	na	2.2E-03	--	--	na	2.2E-02	--	--	--	--	--	--	--	--	**--**	**--**	**na**	**2.2E-02**
DDT [C]	0	1.1E+00	1.0E-03	na	2.2E-03	1.1E+00	2.4E-03	na	2.2E-02	--	--	--	--	--	--	--	--	**1.1E+00**	**2.4E-03**	**na**	**2.2E-02**
Demeton	0	--	1.0E-01	na	--	--	2.4E-01	na	--	--	--	--	--	--	--	--	--	**--**	**2.4E-01**	**na**	**--**
Diazinon	0	1.7E-01	1.7E-01	na	--	1.8E-01	4.1E-01	na	--	--	--	--	--	--	--	--	--	**1.8E-01**	**4.1E-01**	**na**	**--**
Dibenz(a,h)anthracene [C]	0	--	--	na	1.8E-01	--	--	na	1.8E+00	--	--	--	--	--	--	--	--	**--**	**--**	**na**	**1.8E+00**
1,2-Dichlorobenzene	0	--	--	na	1.3E+03	--	--	na	4.4E+03	--	--	--	--	--	--	--	--	**--**	**--**	**na**	**4.4E+03**
1,3-Dichlorobenzene	0	--	--	na	9.6E+02	--	--	na	3.3E+03	--	--	--	--	--	--	--	--	**--**	**--**	**na**	**3.3E+03**
1,4-Dichlorobenzene	0	--	--	na	1.9E+02	--	--	na	6.5E+02	--	--	--	--	--	--	--	--	**--**	**--**	**na**	**6.5E+02**
3,3-Dichlorobenzidine[C]	0	--	--	na	2.8E-01	--	--	na	2.8E+00	--	--	--	--	--	--	--	--	**--**	**--**	**na**	**2.8E+00**
Dichlorobromomethane [C]	0	--	--	na	1.7E+02	--	--	na	1.7E+03	--	--	--	--	--	--	--	--	**--**	**--**	**na**	**1.7E+03**
1,2-Dichloroethane [C]	0	--	--	na	3.7E+02	--	--	na	3.6E+03	--	--	--	--	--	--	--	--	**--**	**--**	**na**	**3.6E+03**
1,1-Dichloroethylene	0	--	--	na	7.1E+03	--	--	na	2.4E+04	--	--	--	--	--	--	--	--	**--**	**--**	**na**	**2.4E+04**
1,2-trans-dichloroethylene	0	--	--	na	1.0E+04	--	--	na	3.4E+04	--	--	--	--	--	--	--	--	**--**	**--**	**na**	**3.4E+04**
2,4-Dichlorophenol	0	--	--	na	2.9E+02	--	--	na	9.9E+02	--	--	--	--	--	--	--	--	**--**	**--**	**na**	**9.9E+02**
2,4-Dichlorophenoxy acetic acid (2,4-D)	0	--	--	na	--	--	--	na	--	--	--	--	--	--	--	--	--	**--**	**--**	**na**	**--**
1,2-Dichloropropane[C]	0	--	--	na	1.5E+02	--	--	na	1.5E+03	--	--	--	--	--	--	--	--	**--**	**--**	**na**	**1.5E+03**
1,3-Dichloropropene [C]	0	--	--	na	2.1E+02	--	--	na	2.1E+03	--	--	--	--	--	--	--	--	**--**	**--**	**na**	**2.1E+03**
Dieldrin [C]	0	2.4E-01	5.6E-02	na	5.4E-04	2.5E-01	1.4E-01	na	5.3E-03	--	--	--	--	--	--	--	--	**2.5E-01**	**1.4E-01**	**na**	**5.3E-03**
Diethyl Phthalate	0	--	--	na	4.4E+04	--	--	na	1.5E+05	--	--	--	--	--	--	--	--	**--**	**--**	**na**	**1.5E+05**
2,4-Dimethylphenol	0	--	--	na	8.5E+02	--	--	na	2.9E+03	--	--	--	--	--	--	--	--	**--**	**--**	**na**	**2.9E+03**
Dimethyl Phthalate	0	--	--	na	1.1E+06	--	--	na	3.8E+06	--	--	--	--	--	--	--	--	**--**	**--**	**na**	**3.8E+06**
Di-n-Butyl Phthalate	0	--	--	na	4.5E+03	--	--	na	1.5E+04	--	--	--	--	--	--	--	--	**--**	**--**	**na**	**1.5E+04**
2,4 Dinitrophenol	0	--	--	na	5.3E+03	--	--	na	1.8E+04	--	--	--	--	--	--	--	--	**--**	**--**	**na**	**1.8E+04**
2-Methyl-4,6-Dinitrophenol	0	--	--	na	2.8E+02	--	--	na	9.6E+02	--	--	--	--	--	--	--	--	**--**	**--**	**na**	**9.6E+02**
2,4-Dinitrotoluene [C]	0	--	--	na	3.4E+01	--	--	na	3.3E+02	--	--	--	--	--	--	--	--	**--**	**--**	**na**	**3.3E+02**
Dioxin 2,3,7,8-tetrachlorodibenzo-p-dioxin	0	--	--	na	5.1E-08	--	--	na	1.7E-07	--	--	--	--	--	--	--	--	**--**	**--**	**na**	**1.7E-07**
1,2-Diphenylhydrazine[C]	0	--	--	na	2.0E+00	--	--	na	2.0E+01	--	--	--	--	--	--	--	--	**--**	**--**	**na**	**2.0E+01**
Alpha-Endosulfan	0	2.2E-01	5.6E-02	na	8.9E+01	2.3E-01	1.4E-01	na	3.0E+02	--	--	--	--	--	--	--	--	**2.3E-01**	**1.4E-01**	**na**	**3.0E+02**
Beta-Endosulfan	0	2.2E-01	5.6E-02	na	8.9E+01	2.3E-01	1.4E-01	na	3.0E+02	--	--	--	--	--	--	--	--	**2.3E-01**	**1.4E-01**	**na**	**3.0E+02**
Alpha + Beta Endosulfan	0	2.2E-01	5.6E-02	--	--	2.3E-01	1.4E-01	--	--	--	--	--	--	--	--	--	--	**2.3E-01**	**1.4E-01**	**--**	**--**
Endosulfan Sulfate	0	--	--	na	8.9E+01	--	--	na	3.0E+02	--	--	--	--	--	--	--	--	**--**	**--**	**na**	**3.0E+02**
Endrin	0	8.6E-02	3.6E-02	na	6.0E-02	8.9E-02	8.8E-02	na	2.0E-01	--	--	--	--	--	--	--	--	**8.9E-02**	**8.8E-02**	**na**	**2.0E-01**
Endrin Aldehyde	0	--	--	na	3.0E-01	--	--	na	1.0E+00	--	--	--	--	--	--	--	--	**--**	**--**	**na**	**1.0E+00**

Parameter	Background	Water Quality Criteria				Wasteload Allocations				Antidegradation Baseline				Antidegradation Allocations				**Most Limiting Allocations**			
(ug/l unless noted)	Conc.	Acute	Chronic	HH (PWS)	HH	Acute	Chronic	HH (PWS)	HH	Acute	Chronic	HH (PWS)	HH	Acute	Chronic	HH (PWS)	HH	**Acute**	**Chronic**	**HH (PWS)**	**HH**
Ethylbenzene	0	--	--	na	2.1E+03	--	--	na	7.2E+03	--	--	--	--	--	--	--	--	**--**	**--**	**na**	**7.2E+03**
Fluoranthene	0	--	--	na	1.4E+02	--	--	na	4.8E+02	--	--	--	--	--	--	--	--	**--**	**--**	**na**	**4.8E+02**
Fluorene	0	--	--	na	5.3E+03	--	--	na	1.8E+04	--	--	--	--	--	--	--	--	**--**	**--**	**na**	**1.8E+04**
Foaming Agents	0	--	--	na	--	--	--	na	--	--	--	--	--	--	--	--	--	**--**	**--**	**na**	**--**
Guthion	0	--	1.0E-02	na	--	--	2.4E-02	na	--	--	--	--	--	--	--	--	--	**--**	**2.4E-02**	**na**	**--**
Heptachlor [C]	0	5.2E-01	3.8E-03	na	7.9E-04	5.4E-01	9.3E-03	na	7.8E-03	--	--	--	--	--	--	--	--	**5.4E-01**	**9.3E-03**	**na**	**7.8E-03**
Heptachlor Epoxide[C]	0	5.2E-01	3.8E-03	na	3.9E-04	5.4E-01	9.3E-03	na	3.8E-03	--	--	--	--	--	--	--	--	**5.4E-01**	**9.3E-03**	**na**	**3.8E-03**
Hexachlorobenzene[C]	0	--	--	na	2.9E-03	--	--	na	2.8E-02	--	--	--	--	--	--	--	--	**--**	**--**	**na**	**2.8E-02**
Hexachlorobutadiene[C]	0	--	--	na	1.8E+02	--	--	na	1.8E+03	--	--	--	--	--	--	--	--	**--**	**--**	**na**	**1.8E+03**
Hexachlorocyclohexane Alpha-BHC[C]	0	--	--	na	4.9E-02	--	--	na	4.8E-01	--	--	--	--	--	--	--	--	**--**	**--**	**na**	**4.8E-01**
Hexachlorocyclohexane Beta-BHC[C]	0	--	--	na	1.7E-01	--	--	na	1.7E+00	--	--	--	--	--	--	--	--	**--**	**--**	**na**	**1.7E+00**
Hexachlorocyclohexane Gamma-BHC[C] (Lindane)	0	9.5E-01	na	na	1.8E+00	9.9E-01	--	na	1.8E+01	--	--	--	--	--	--	--	--	**9.9E-01**	**--**	**na**	**1.8E+01**
Hexachlorocyclopentadiene	0	--	--	na	1.1E+03	--	--	na	3.8E+03	--	--	--	--	--	--	--	--	**--**	**--**	**na**	**3.8E+03**
Hexachloroethane[C]	0	--	--	na	3.3E+01	--	--	na	3.2E+02	--	--	--	--	--	--	--	--	**--**	**--**	**na**	**3.2E+02**
Hydrogen Sulfide	0	--	2.0E+00	na	--	--	4.9E+00	na	--	--	--	--	--	--	--	--	--	**--**	**4.9E+00**	**na**	**--**
Indeno (1,2,3-cd) pyrene [C]	0	--	--	na	1.8E-01	--	--	na	1.8E+00	--	--	--	--	--	--	--	--	**--**	**--**	**na**	**1.8E+00**
Iron	0	--	--	na	--	--	--	na	--	--	--	--	--	--	--	--	--	**--**	**--**	**na**	**--**
Isophorone[C]	0	--	--	na	9.6E+03	--	--	na	9.4E+04	--	--	--	--	--	--	--	--	**--**	**--**	**na**	**9.4E+04**
Kepone	0	--	0.0E+00	na	--	--	0.0E+00	na	--	--	--	--	--	--	--	--	--	**--**	**0.0E+00**	**na**	**--**
Lead	0	6.5E+01	7.4E+00	na	--	6.8E+01	1.8E+01	na	--	--	--	--	--	--	--	--	--	**6.8E+01**	**1.8E+01**	**na**	**--**
Malathion	0	--	1.0E-01	na	--	--	2.4E-01	na	--	--	--	--	--	--	--	--	--	**--**	**2.4E-01**	**na**	**--**
Manganese	0	--	--	na	--	--	--	na	--	--	--	--	--	--	--	--	--	**--**	**--**	**na**	**--**
Mercury	0	1.4E+00	7.7E-01	- -	- -	1.5E+00	1.9E+00	- -	- -	--	--	--	--	--	--	--	--	**1.5E+00**	**1.9E+00**	**- -**	**- -**
Methyl Bromide	0	--	--	na	1.5E+03	--	--	na	5.1E+03	--	--	--	--	--	--	--	--	**--**	**--**	**na**	**5.1E+03**
Methylene Chloride [C]	0	--	--	na	5.9E+03	--	--	na	5.8E+04	--	--	--	--	--	--	--	--	**--**	**--**	**na**	**5.8E+04**
Methoxychlor	0	--	3.0E-02	na	--	--	7.3E-02	na	--	--	--	--	--	--	--	--	--	**--**	**7.3E-02**	**na**	**--**
Mirex	0	--	0.0E+00	na	--	--	0.0E+00	na	--	--	--	--	--	--	--	--	--	**--**	**0.0E+00**	**na**	**--**
Nickel	0	1.2E+02	1.4E+01	na	4.6E+03	1.3E+02	3.3E+01	na	1.6E+04	--	--	--	--	--	--	--	--	**1.3E+02**	**3.3E+01**	**na**	**1.6E+04**
Nitrate (as N)	0	--	--	na	--	--	--	na	--	--	--	--	--	--	--	--	--	**--**	**--**	**na**	**--**
Nitrobenzene	0	--	--	na	6.9E+02	--	--	na	2.4E+03	--	--	--	--	--	--	--	--	**--**	**--**	**na**	**2.4E+03**
N-Nitrosodimethylamine[C]	0	--	--	na	3.0E+01	--	--	na	2.9E+02	--	--	--	--	--	--	--	--	**--**	**--**	**na**	**2.9E+02**
N-Nitrosodiphenylamine[C]	0	--	--	na	6.0E+01	--	--	na	5.9E+02	--	--	--	--	--	--	--	--	**--**	**--**	**na**	**5.9E+02**
N-Nitrosodi-n-propylamine[C]	0	--	--	na	5.1E+00	--	--	na	5.0E+01	--	--	--	--	--	--	--	--	**--**	**--**	**na**	**5.0E+01**
Nonylphenol	0	2.8E+01	6.6E+00	--	--	2.9E+01	1.6E+01	na	--	--	--	--	--	--	--	--	--	**2.9E+01**	**1.6E+01**	**na**	**--**
Parathion	0	6.5E-02	1.3E-02	na	--	6.8E-02	3.2E-02	na	--	--	--	--	--	--	--	--	--	**6.8E-02**	**3.2E-02**	**na**	**--**
PCB Total[C]	0	--	1.4E-02	na	6.4E-04	--	3.4E-02	na	6.3E-03	--	--	--	--	--	--	--	--	**--**	**3.4E-02**	**na**	**6.3E-03**
Pentachlorophenol [C]	0	7.8E-03	8.7E-03	na	3.0E+01	8.1E-03	2.1E-02	na	2.9E+02	--	--	--	--	--	--	--	--	**8.1E-03**	**2.1E-02**	**na**	**2.9E+02**
Phenol	0	--	--	na	8.6E+05	--	--	na	2.9E+06	--	--	--	--	--	--	--	--	**--**	**--**	**na**	**2.9E+06**
Pyrene	0	--	--	na	4.0E+03	--	--	na	1.4E+04	--	--	--	--	--	--	--	--	**--**	**--**	**na**	**1.4E+04**
Radionuclides	0	--	--	na	--	--	--	na	--	--	--	--	--	--	--	--	--	**--**	**--**	**na**	**--**
Gross Alpha Activity (pCi/L)	0	--	--	na	--	--	--	na	--	--	--	--	--	--	--	--	--	**--**	**--**	**na**	**--**
Beta and Photon Activity (mrem/yr)	0	--	--	na	--	--	--	na	--	--	--	--	--	--	--	--	--	**--**	**--**	**na**	**--**
Radium 226 + 228 (pCi/L)	0	--	--	na	--	--	--	na	--	--	--	--	--	--	--	--	--	**--**	**--**	**na**	**--**
Uranium (ug/l)	0	--	--	na	--	--	--	na	--	--	--	--	--	--	--	--	--	**--**	**--**	**na**	**--**

Parameter	Background	Water Quality Criteria				Wasteload Allocations				Antidegradation Baseline				Antidegradation Allocations				**Most Limiting Allocations**			
(ug/l unless noted)	Conc.	Acute	Chronic	HH (PWS)	HH	Acute	Chronic	HH (PWS)	HH	Acute	Chronic	HH (PWS)	HH	Acute	Chronic	HH (PWS)	HH	**Acute**	**Chronic**	**HH (PWS)**	**HH**
Selenium, Total Recoverable	0	2.0E+01	5.0E+00	na	4.2E+03	2.1E+01	1.2E+01	na	1.4E+04	--	--	--	--	--	--	--	--	**2.1E+01**	**1.2E+01**	**na**	**1.4E+04**
Silver	0	1.5E+00	--	na	--	1.6E+00	--	na	--	--	--	--	--	--	--	--	--	**1.6E+00**	**--**	**na**	**--**
Sulfate	0	--	--	na	--	--	--	na	--	--	--	--	--	--	--	--	--	**--**	**--**	**na**	**--**
1,1,2,2-Tetrachloroethane[C]	0	--	--	na	4.0E+01	--	--	na	3.9E+02	--	--	--	--	--	--	--	--	**--**	**--**	**na**	**3.9E+02**
Tetrachloroethylene[C]	0	--	--	na	3.3E+01	--	--	na	3.2E+02	--	--	--	--	--	--	--	--	**--**	**--**	**na**	**3.2E+02**
Thallium	0	--	--	na	4.7E-01	--	--	na	1.6E+00	--	--	--	--	--	--	--	--	**--**	**--**	**na**	**1.6E+00**
Toluene	0	--	--	na	6.0E+03	--	--	na	2.0E+04	--	--	--	--	--	--	--	--	**--**	**--**	**na**	**2.0E+04**
Total dissolved solids	0	--	--	na	--	--	--	na	--	--	--	--	--	--	--	--	--	**--**	**--**	**na**	**--**
Toxaphene [C]	0	7.3E-01	2.0E-04	na	2.8E-03	7.6E-01	4.9E-04	na	2.8E-02	--	--	--	--	--	--	--	--	**7.6E-01**	**4.9E-04**	**na**	**2.8E-02**
Tributyltin	0	4.6E-01	7.2E-02	na	--	4.8E-01	1.8E-01	na	--	--	--	--	--	--	--	--	--	**4.8E-01**	**1.8E-01**	**na**	**--**
1,2,4-Trichlorobenzene	0	--	--	na	7.0E+01	--	--	na	2.4E+02	--	--	--	--	--	--	--	--	**--**	**--**	**na**	**2.4E+02**
1,1,2-Trichloroethane[C]	0	--	--	na	1.6E+02	--	--	na	1.6E+03	--	--	--	--	--	--	--	--	**--**	**--**	**na**	**1.6E+03**
Trichloroethylene [C]	0	--	--	na	3.0E+02	--	--	na	2.9E+03	--	--	--	--	--	--	--	--	**--**	**--**	**na**	**2.9E+03**
2,4,6-Trichlorophenol [C]	0	--	--	na	2.4E+01	--	--	na	2.4E+02	--	--	--	--	--	--	--	--	**--**	**--**	**na**	**2.4E+02**
2-(2,4,5-Trichlorophenoxy) propionic acid (Silvex)	0	--	--	na	--	--	--	na	--	--	--	--	--	--	--	--	--	**--**	**--**	**na**	**--**
Vinyl Chloride[C]	0	--	--	na	2.4E+01	--	--	na	2.4E+02	--	--	--	--	--	--	--	--	**--**	**--**	**na**	**2.4E+02**
Zinc	0	7.9E+01	7.9E+01	na	2.6E+04	8.2E+01	1.9E+02	na	8.9E+04	--	--	--	--	--	--	--	--	**8.2E+01**	**1.9E+02**	**na**	**8.9E+04**

Notes:

1. All concentrations expressed as micrograms/liter (ug/l), unless noted otherwise
2. Discharge flow is highest monthly average or Form 2C maximum for Industries and design flow for Municipals
3. Metals measured as Dissolved, unless specified otherwise
4. "C" indicates a carcinogenic parameter
5. Regular WLAs are mass balances (minus background concentration) using the % of stream flow entered above under Mixing Information.
   Antidegradation WLAs are based upon a complete mix.
6. Antideg. Baseline = (0.25(WQC - background conc.) + background conc.) for acute and chronic
   = (0.1(WQC - background conc.) + background conc.) for human health
7. WLAs established at the following stream flows: 1Q10 for Acute, 30Q10 for Chronic Ammonia, 7Q10 for Other Chronic, 30Q5 for Non-carcinogens and Harmonic Mean for Carcinogens. To apply mixing ratios from a model set the stream flow equal to (mixing ratio - 1), effluent flow equal to 1 and 100% mix.

Metal	Target Value (SSTV)
Antimony	2.2E+03
Arsenic	1.4E+02
Barium	na
Cadmium	9.6E-01
Chromium III	7.4E+01
Chromium VI	6.6E+00
Copper	3.6E+00
Iron	na
Lead	1.1E+01
Manganese	na
Mercury	5.8E-01
Nickel	2.0E+01
Selenium	7.3E+00
Silver	6.4E-01
Zinc	3.3E+01

Note: do not use QL's lower than the minimum QL's provided in agency guidance

FRESHWATER
WATER QUALITY CRITERIA / WASTELOAD ALLOCATION ANALYSIS

Facility Name: BPS Outfalls 002 and 004 Permit No.: VA0004138

Receiving Stream: James River Version: OWP Guidance Memo 00-2011 (8/24/00)

Stream Information

Mean Hardness (as CaCO3) =	62.5	mg/L
90% Temperature (Annual) =	26.86	deg C
90% Temperature (Wet season) =		deg C
90% Maximum pH =	8.03	SU
10% Maximum pH =	7.06	SU
Tier Designation (1 or 2) =	2	
Public Water Supply (PWS) Y/N? =	N	
Trout Present Y/N? =	N	
Early Life Stages Present Y/N? =	Y	

Stream Flows

1Q10 (Annual) =	341	MGD
7Q10 (Annual) =	389	MGD
30Q10 (Annual) =	480	MGD
1Q10 (Wet season) =		MGD
30Q10 (Wet season) =		MGD
30Q5 =	542	MGD
Harmonic Mean =	1553	MGD

Mixing Information

Annual - 1Q10 Mix =	3.48	%
- 7Q10 Mix =	100	%
- 30Q10 Mix =	100	%
Wet Season - 1Q10 Mix =		%
- 30Q10 Mix =		%

Effluent Information

Mean Hardness (as CaCO3) =	70.1	mg/L
90% Temp (Annual) =	28.3	deg C
90% Temp (Wet season) =		deg C
90% Maximum pH =	8.3	SU
10% Maximum pH =	7	SU
Discharge Flow =	4.2912	MGD

Parameter	Background	Water Quality Criteria				Wasteload Allocations				Antidegradation Baseline				Antidegradation Allocations				**Most Limiting Allocations**			
(ug/l unless noted)	Conc.	Acute	Chronic	HH (PWS)	HH	Acute	Chronic	HH (PWS)	HH	Acute	Chronic	HH (PWS)	HH	Acute	Chronic	HH (PWS)	HH	**Acute**	**Chronic**	**HH (PWS)**	**HH**
Acenapthene	0	--	--	na	9.9E+02	--	--	na	1.3E+05	--	--	na	9.9E+01	--	--	na	1.3E+04	**--**	**--**	**na**	**1.3E+04**
Acrolein	0	--	--	na	9.3E+00	--	--	na	1.2E+03	--	--	na	9.3E-01	--	--	na	1.2E+02	**--**	**--**	**na**	**1.2E+02**
Acrylonitrile[C]	0	--	--	na	2.5E+00	--	--	na	9.1E+02	--	--	na	2.5E-01	--	--	na	9.1E+01	**--**	**--**	**na**	**9.1E+01**
Aldrin [C]	0	3.0E+00	--	na	5.0E-04	1.1E+01	--	na	1.8E-01	7.5E-01	--	na	5.0E-05	6.0E+01	--	na	1.8E-02	**1.1E+01**	**--**	**na**	**1.8E-02**
Ammonia-N (mg/l) (Yearly)	0	7.12E+00	1.05E+00	na	--	2.68E+01	1.18E+02	na	--	1.98E+00	2.62E-01	na	--	1.59E+02	2.96E+01	na	--	**2.68E+01**	**2.96E+01**	**na**	**--**
Ammonia-N (mg/l) (High Flow)	0	4.71E+00	1.52E+00	na	--	4.71E+00	1.52E+00	na	--	1.18E+00	3.81E-01	na	--	1.18E+00	3.81E-01	na	--	**1.18E+00**	**3.81E-01**	**na**	**--**
Anthracene	0	--	--	na	4.0E+04	--	--	na	5.1E+06	--	--	na	4.0E+03	--	--	na	5.1E+05	**--**	**--**	**na**	**5.1E+05**
Antimony	0	--	--	na	6.4E+02	--	--	na	8.1E+04	--	--	na	6.4E+01	--	--	na	8.1E+03	**--**	**--**	**na**	**8.1E+03**
Arsenic	0	3.4E+02	1.5E+02	na	--	1.3E+03	1.4E+04	na	--	8.5E+01	3.8E+01	na	--	6.8E+03	3.4E+03	na	--	**1.3E+03**	**3.4E+03**	**na**	**--**
Barium	0	--	--	na	--	--	--	na	--	--	--	na	--	--	--	na	--	**--**	**--**	**na**	**--**
Benzene [C]	0	--	--	na	5.1E+02	--	--	na	1.9E+05	--	--	na	5.1E+01	--	--	na	1.9E+04	**--**	**--**	**na**	**1.9E+04**
Benzidine[C]	0	--	--	na	2.0E-03	--	--	na	7.3E-01	--	--	na	2.0E-04	--	--	na	7.3E-02	**--**	**--**	**na**	**7.3E-02**
Benzo (a) anthracene [C]	0	--	--	na	1.8E-01	--	--	na	6.5E+01	--	--	na	1.8E-02	--	--	na	6.5E+00	**--**	**--**	**na**	**6.5E+00**
Benzo (b) fluoranthene [C]	0	--	--	na	1.8E-01	--	--	na	6.5E+01	--	--	na	1.8E-02	--	--	na	6.5E+00	**--**	**--**	**na**	**6.5E+00**
Benzo (k) fluoranthene [C]	0	--	--	na	1.8E-01	--	--	na	6.5E+01	--	--	na	1.8E-02	--	--	na	6.5E+00	**--**	**--**	**na**	**6.5E+00**
Benzo (a) pyrene [C]	0	--	--	na	1.8E-01	--	--	na	6.5E+01	--	--	na	1.8E-02	--	--	na	6.5E+00	**--**	**--**	**na**	**6.5E+00**
Bis2-Chloroethyl Ether [C]	0	--	--	na	5.3E+00	--	--	na	1.9E+03	--	--	na	5.3E-01	--	--	na	1.9E+02	**--**	**--**	**na**	**1.9E+02**
Bis2-Chloroisopropyl Ether	0	--	--	na	6.5E+04	--	--	na	8.3E+06	--	--	na	6.5E+03	--	--	na	8.3E+05	**--**	**--**	**na**	**8.3E+05**
Bis 2-Ethylhexyl Phthalate [C]	0	--	--	na	2.2E+01	--	--	na	8.0E+03	--	--	na	2.2E+00	--	--	na	8.0E+02	**--**	**--**	**na**	**8.0E+02**
Bromoform [C]	0	--	--	na	1.4E+03	--	--	na	5.1E+05	--	--	na	1.4E+02	--	--	na	5.1E+04	**--**	**--**	**na**	**5.1E+04**
Butylbenzylphthalate	0	--	--	na	1.9E+03	--	--	na	2.4E+05	--	--	na	1.9E+02	--	--	na	2.4E+04	**--**	**--**	**na**	**2.4E+04**
Cadmium	0	2.4E+00	7.9E-01	na	--	9.0E+00	7.2E+01	na	--	5.8E-01	2.0E-01	na	--	4.7E+01	1.8E+01	na	--	**9.0E+00**	**1.8E+01**	**na**	**--**
Carbon Tetrachloride [C]	0	--	--	na	1.6E+01	--	--	na	5.8E+03	--	--	na	1.6E+00	--	--	na	5.8E+02	**--**	**--**	**na**	**5.8E+02**
Chlordane [C]	0	2.4E+00	4.3E-03	na	8.1E-03	9.0E+00	3.9E-01	na	2.9E+00	6.0E-01	1.1E-03	na	8.1E-04	4.8E+01	9.9E-02	na	2.9E-01	**9.0E+00**	**9.9E-02**	**na**	**2.9E-01**
Chloride	0	8.6E+05	2.3E+05	na	--	3.2E+06	2.1E+07	na	--	2.2E+05	5.8E+04	na	--	1.7E+07	5.3E+06	na	--	**3.2E+06**	**5.3E+06**	**na**	**--**
TRC	0	1.9E+01	1.1E+01	na	--	7.2E+01	1.0E+03	na	--	4.8E+00	2.8E+00	na	--	3.8E+02	2.5E+02	na	--	**7.2E+01**	**2.5E+02**	**na**	**--**
Chlorobenzene	0	--	--	na	1.6E+03	--	--	na	2.0E+05	--	--	na	1.6E+02	--	--	na	2.0E+04	**--**	**--**	**na**	**2.0E+04**

Parameter	Background	Water Quality Criteria				Wasteload Allocations				Antidegradation Baseline				Antidegradation Allocations				**Most Limiting Allocations**			
(ug/l unless noted)	Conc.	Acute	Chronic	HH (PWS)	HH	Acute	Chronic	HH (PWS)	HH	Acute	Chronic	HH (PWS)	HH	Acute	Chronic	HH (PWS)	HH	**Acute**	**Chronic**	**HH (PWS)**	**HH**
Chlorodibromomethane[C]	0	--	--	na	1.3E+02	--	--	na	4.7E+04	--	--	na	1.3E+01	--	--	na	4.7E+03	**--**	**--**	**na**	**4.7E+03**
Chloroform	0	--	--	na	1.1E+04	--	--	na	1.4E+06	--	--	na	1.1E+03	--	--	na	1.4E+05	**--**	**--**	**na**	**1.4E+05**
2-Chloronaphthalene	0	--	--	na	1.6E+03	--	--	na	2.0E+05	--	--	na	1.6E+02	--	--	na	2.0E+04	**--**	**--**	**na**	**2.0E+04**
2-Chlorophenol	0	--	--	na	1.5E+02	--	--	na	1.9E+04	--	--	na	1.5E+01	--	--	na	1.9E+03	**--**	**--**	**na**	**1.9E+03**
Chlorpyrifos	0	8.3E-02	4.1E-02	na	--	3.1E-01	3.8E+00	na	--	2.1E-02	1.0E-02	na	--	1.7E+00	9.4E-01	na	--	**3.1E-01**	**9.4E-01**	**na**	**--**
Chromium III	0	4.0E+02	5.0E+01	na	--	1.5E+03	4.6E+03	na	--	9.7E+01	1.3E+01	na	--	7.8E+03	1.2E+03	na	--	**1.5E+03**	**1.2E+03**	**na**	**--**
Chromium VI	0	1.6E+01	1.1E+01	na	--	6.0E+01	1.0E+03	na	--	4.0E+00	2.8E+00	na	--	3.2E+02	2.5E+02	na	--	**6.0E+01**	**2.5E+02**	**na**	**--**
Chromium, Total	0	--	--	1.0E+02	--	--	--	na	--	--	--	1.0E+01	--	--	--	1.3E+03	--	**--**	**--**	**na**	**--**
Chrysene [C]	0	--	--	na	1.8E-02	--	--	na	6.5E+00	--	--	na	1.8E-03	--	--	na	6.5E-01	**--**	**--**	**na**	**6.5E-01**
Copper	0	8.9E+00	6.0E+00	na	--	3.3E+01	5.5E+02	na	--	2.2E+00	1.5E+00	na	--	1.7E+02	1.4E+02	na	--	**3.3E+01**	**1.4E+02**	**na**	**--**
Cyanide, Free	0	2.2E+01	5.2E+00	na	1.6E+04	8.3E+01	4.8E+02	na	2.0E+06	5.5E+00	1.3E+00	na	1.6E+03	4.4E+02	1.2E+02	na	2.0E+05	**8.3E+01**	**1.2E+02**	**na**	**2.0E+05**
DDD [C]	0	--	--	na	3.1E-03	--	--	na	1.1E+00	--	--	na	3.1E-04	--	--	na	1.1E-01	**--**	**--**	**na**	**1.1E-01**
DDE [C]	0	--	--	na	2.2E-03	--	--	na	8.0E-01	--	--	na	2.2E-04	--	--	na	8.0E-02	**--**	**--**	**na**	**8.0E-02**
DDT [C]	0	1.1E+00	1.0E-03	na	2.2E-03	4.1E+00	9.2E-02	na	8.0E-01	2.8E-01	2.5E-04	na	2.2E-04	2.2E+01	2.3E-02	na	8.0E-02	**4.1E+00**	**2.3E-02**	**na**	**8.0E-02**
Demeton	0	--	1.0E-01	na	--	--	9.2E+00	na	--	--	2.5E-02	na	--	--	2.3E+00	na	--	**--**	**2.3E+00**	**na**	**--**
Diazinon	0	1.7E-01	1.7E-01	na	--	6.4E-01	1.6E+01	na	--	4.3E-02	4.3E-02	na	--	3.4E+00	3.9E+00	na	--	**6.4E-01**	**3.9E+00**	**na**	**--**
Dibenz(a,h)anthracene [C]	0	--	--	na	1.8E-01	--	--	na	6.5E+01	--	--	na	1.8E-02	--	--	na	6.5E+00	**--**	**--**	**na**	**6.5E+00**
1,2-Dichlorobenzene	0	--	--	na	1.3E+03	--	--	na	1.7E+05	--	--	na	1.3E+02	--	--	na	1.7E+04	**--**	**--**	**na**	**1.7E+04**
1,3-Dichlorobenzene	0	--	--	na	9.6E+02	--	--	na	1.2E+05	--	--	na	9.6E+01	--	--	na	1.2E+04	**--**	**--**	**na**	**1.2E+04**
1,4-Dichlorobenzene	0	--	--	na	1.9E+02	--	--	na	2.4E+04	--	--	na	1.9E+01	--	--	na	2.4E+03	**--**	**--**	**na**	**2.4E+03**
3,3-Dichlorobenzidine[C]	0	--	--	na	2.8E-01	--	--	na	1.0E+02	--	--	na	2.8E-02	--	--	na	1.0E+01	**--**	**--**	**na**	**1.0E+01**
Dichlorobromomethane [C]	0	--	--	na	1.7E+02	--	--	na	6.2E+04	--	--	na	1.7E+01	--	--	na	6.2E+03	**--**	**--**	**na**	**6.2E+03**
1,2-Dichloroethane [C]	0	--	--	na	3.7E+02	--	--	na	1.3E+05	--	--	na	3.7E+01	--	--	na	1.3E+04	**--**	**--**	**na**	**1.3E+04**
1,1-Dichloroethylene	0	--	--	na	7.1E+03	--	--	na	9.0E+05	--	--	na	7.1E+02	--	--	na	9.0E+04	**--**	**--**	**na**	**9.0E+04**
1,2-trans-dichloroethylene	0	--	--	na	1.0E+04	--	--	na	1.3E+06	--	--	na	1.0E+03	--	--	na	1.3E+05	**--**	**--**	**na**	**1.3E+05**
2,4-Dichlorophenol	0	--	--	na	2.9E+02	--	--	na	3.7E+04	--	--	na	2.9E+01	--	--	na	3.7E+03	**--**	**--**	**na**	**3.7E+03**
2,4-Dichlorophenoxy acetic acid (2,4-D)	0	--	--	na	--	--	--	na	--	--	--	na	--	--	--	na	--	**--**	**--**	**na**	**--**
1,2-Dichloropropane[C]	0	--	--	na	1.5E+02	--	--	na	5.4E+04	--	--	na	1.5E+01	--	--	na	5.4E+03	**--**	**--**	**na**	**5.4E+03**
1,3-Dichloropropene [C]	0	--	--	na	2.1E+02	--	--	na	7.6E+04	--	--	na	2.1E+01	--	--	na	7.6E+03	**--**	**--**	**na**	**7.6E+03**
Dieldrin [C]	0	2.4E-01	5.6E-02	na	5.4E-04	9.0E-01	5.1E+00	na	2.0E-01	6.0E-02	1.4E-02	na	5.4E-05	4.8E+00	1.3E+00	na	2.0E-02	**9.0E-01**	**1.3E+00**	**na**	**2.0E-02**
Diethyl Phthalate	0	--	--	na	4.4E+04	--	--	na	5.6E+06	--	--	na	4.4E+03	--	--	na	5.6E+05	**--**	**--**	**na**	**5.6E+05**
2,4-Dimethylphenol	0	--	--	na	8.5E+02	--	--	na	1.1E+05	--	--	na	8.5E+01	--	--	na	1.1E+04	**--**	**--**	**na**	**1.1E+04**
Dimethyl Phthalate	0	--	--	na	1.1E+06	--	--	na	1.4E+08	--	--	na	1.1E+05	--	--	na	1.4E+07	**--**	**--**	**na**	**1.4E+07**
Di-n-Butyl Phthalate	0	--	--	na	4.5E+03	--	--	na	5.7E+05	--	--	na	4.5E+02	--	--	na	5.7E+04	**--**	**--**	**na**	**5.7E+04**
2,4 Dinitrophenol	0	--	--	na	5.3E+03	--	--	na	6.7E+05	--	--	na	5.3E+02	--	--	na	6.7E+04	**--**	**--**	**na**	**6.7E+04**
2-Methyl-4,6-Dinitrophenol	0	--	--	na	2.8E+02	--	--	na	3.6E+04	--	--	na	2.8E+01	--	--	na	3.6E+03	**--**	**--**	**na**	**3.6E+03**
2,4-Dinitrotoluene [C]	0	--	--	na	3.4E+01	--	--	na	1.2E+04	--	--	na	3.4E+00	--	--	na	1.2E+03	**--**	**--**	**na**	**1.2E+03**
Dioxin 2,3,7,8-tetrachlorodibenzo-p-dioxin	0	--	--	na	5.1E-08	--	--	na	6.5E-06	--	--	na	5.1E-09	--	--	na	6.5E-07	**--**	**--**	**na**	**6.5E-07**
1,2-Diphenylhydrazine[C]	0	--	--	na	2.0E+00	--	--	na	7.3E+02	--	--	na	2.0E-01	--	--	na	7.3E+01	**--**	**--**	**na**	**7.3E+01**
Alpha-Endosulfan	0	2.2E-01	5.6E-02	na	8.9E+01	8.3E-01	5.1E+00	na	1.1E+04	5.5E-02	1.4E-02	na	8.9E+00	4.4E+00	1.3E+00	na	1.1E+03	**8.3E-01**	**1.3E+00**	**na**	**1.1E+03**
Beta-Endosulfan	0	2.2E-01	5.6E-02	na	8.9E+01	8.3E-01	5.1E+00	na	1.1E+04	5.5E-02	1.4E-02	na	8.9E+00	4.4E+00	1.3E+00	na	1.1E+03	**8.3E-01**	**1.3E+00**	**na**	**1.1E+03**
Alpha + Beta Endosulfan	0	2.2E-01	5.6E-02	--	--	8.3E-01	5.1E+00	--	--	5.5E-02	1.4E-02	--	--	4.4E+00	1.3E+00	--	--	**8.3E-01**	**1.3E+00**	**--**	**--**
Endosulfan Sulfate	0	--	--	na	8.9E+01	--	--	na	1.1E+04	--	--	na	8.9E+00	--	--	na	1.1E+03	**--**	**--**	**na**	**1.1E+03**
Endrin	0	8.6E-02	3.6E-02	na	6.0E-02	3.2E-01	3.3E+00	na	7.6E+00	2.2E-02	9.0E-03	na	6.0E-03	1.7E+00	8.2E-01	na	7.6E-01	**3.2E-01**	**8.2E-01**	**na**	**7.6E-01**
Endrin Aldehyde	0	--	--	na	3.0E-01	--	--	na	3.8E+01	--	--	na	3.0E-02	--	--	na	3.8E+00	**--**	**--**	**na**	**3.8E+00**

Parameter	Background	Water Quality Criteria				Wasteload Allocations				Antidegradation Baseline				Antidegradation Allocations				**Most Limiting Allocations**			
(ug/l unless noted)	Conc.	Acute	Chronic	HH (PWS)	HH	Acute	Chronic	HH (PWS)	HH	Acute	Chronic	HH (PWS)	HH	Acute	Chronic	HH (PWS)	HH	**Acute**	**Chronic**	**HH (PWS)**	**HH**
Ethylbenzene	0	--	--	na	2.1E+03	--	--	na	2.7E+05	--	--	na	2.1E+02	--	--	na	2.7E+04	**--**	**--**	**na**	**2.7E+04**
Fluoranthene	0	--	--	na	1.4E+02	--	--	na	1.8E+04	--	--	na	1.4E+01	--	--	na	1.8E+03	**--**	**--**	**na**	**1.8E+03**
Fluorene	0	--	--	na	5.3E+03	--	--	na	6.7E+05	--	--	na	5.3E+02	--	--	na	6.7E+04	**--**	**--**	**na**	**6.7E+04**
Foaming Agents	0	--	--	na	--	--	--	na	--	--	--	na	--	--	--	na	--	**--**	**--**	**na**	**--**
Guthion	0	--	1.0E-02	na	--	--	9.2E-01	na	--	--	2.5E-03	na	--	--	2.3E-01	na	--	**--**	**2.3E-01**	**na**	**--**
Heptachlor [C]	0	5.2E-01	3.8E-03	na	7.9E-04	2.0E+00	3.5E-01	na	2.9E-01	1.3E-01	9.5E-04	na	7.9E-05	1.0E+01	8.7E-02	na	2.9E-02	**2.0E+00**	**8.7E-02**	**na**	**2.9E-02**
Heptachlor Epoxide[C]	0	5.2E-01	3.8E-03	na	3.9E-04	2.0E+00	3.5E-01	na	1.4E-01	1.3E-01	9.5E-04	na	3.9E-05	1.0E+01	8.7E-02	na	1.4E-02	**2.0E+00**	**8.7E-02**	**na**	**1.4E-02**
Hexachlorobenzene[C]	0	--	--	na	2.9E-03	--	--	na	1.1E+00	--	--	na	2.9E-04	--	--	na	1.1E-01	**--**	**--**	**na**	**1.1E-01**
Hexachlorobutadiene[C]	0	--	--	na	1.8E+02	--	--	na	6.5E+04	--	--	na	1.8E+01	--	--	na	6.5E+03	**--**	**--**	**na**	**6.5E+03**
Hexachlorocyclohexane Alpha-BHC[C]	0	--	--	na	4.9E-02	--	--	na	1.8E+01	--	--	na	4.9E-03	--	--	na	1.8E+00	**--**	**--**	**na**	**1.8E+00**
Hexachlorocyclohexane Beta-BHC[C]	0	--	--	na	1.7E-01	--	--	na	6.2E+01	--	--	na	1.7E-02	--	--	na	6.2E+00	**--**	**--**	**na**	**6.2E+00**
Hexachlorocyclohexane Gamma-BHC[C] (Lindane)	0	9.5E-01	na	na	1.8E+00	3.6E+00	--	na	6.5E+02	2.4E-01	--	na	1.8E-01	1.9E+01	--	na	6.5E+01	**3.6E+00**	**--**	**na**	**6.5E+01**
Hexachlorocyclopentadiene	0	--	--	na	1.1E+03	--	--	na	1.4E+05	--	--	na	1.1E+02	--	--	na	1.4E+04	**--**	**--**	**na**	**1.4E+04**
Hexachloroethane[C]	0	--	--	na	3.3E+01	--	--	na	1.2E+04	--	--	na	3.3E+00	--	--	na	1.2E+03	**--**	**--**	**na**	**1.2E+03**
Hydrogen Sulfide	0	--	2.0E+00	na	--	--	1.8E+02	na	--	--	5.0E-01	na	--	--	4.6E+01	na	--	**--**	**4.6E+01**	**na**	**--**
Indeno (1,2,3-cd) pyrene [C]	0	--	--	na	1.8E-01	--	--	na	6.5E+01	--	--	na	1.8E-02	--	--	na	6.5E+00	**--**	**--**	**na**	**6.5E+00**
Iron	0	--	--	na	--	--	--	na	--	--	--	na	--	--	--	na	--	**--**	**--**	**na**	**--**
Isophorone[C]	0	--	--	na	9.6E+03	--	--	na	3.5E+06	--	--	na	9.6E+02	--	--	na	3.5E+05	**--**	**--**	**na**	**3.5E+05**
Kepone	0	--	0.0E+00	na	--	--	0.0E+00	na	--	--	0.0E+00	na	--	--	0.0E+00	na	--	**--**	**0.0E+00**	**na**	**--**
Lead	0	6.8E+01	7.4E+00	na	--	2.6E+02	6.8E+02	na	--	1.6E+01	1.9E+00	na	--	1.3E+03	1.7E+02	na	--	**2.6E+02**	**1.7E+02**	**na**	**--**
Malathion	0	--	1.0E-01	na	--	--	9.2E+00	na	--	--	2.5E-02	na	--	--	2.3E+00	na	--	**--**	**2.3E+00**	**na**	**--**
Manganese	0	--	--	na	--	--	--	na	--	--	--	na	--	--	--	na	--	**--**	**--**	**na**	**--**
Mercury	0	1.4E+00	7.7E-01	- -	- -	5.3E+00	7.1E+01	- -	- -	3.5E-01	1.9E-01	- -	--	2.8E+01	1.8E+01	- -	--	**5.3E+00**	**1.8E+01**	**- -**	**- -**
Methyl Bromide	0	--	--	na	1.5E+03	--	--	na	1.9E+05	--	--	na	1.5E+02	--	--	na	1.9E+04	**--**	**--**	**na**	**1.9E+04**
Methylene Chloride [C]	0	--	--	na	5.9E+03	--	--	na	2.1E+06	--	--	na	5.9E+02	--	--	na	2.1E+05	**--**	**--**	**na**	**2.1E+05**
Methoxychlor	0	--	3.0E-02	na	--	--	2.7E+00	na	--	--	7.5E-03	na	--	--	6.9E-01	na	--	**--**	**6.9E-01**	**na**	**--**
Mirex	0	--	0.0E+00	na	--	--	0.0E+00	na	--	--	0.0E+00	na	--	--	0.0E+00	na	--	**--**	**0.0E+00**	**na**	**--**
Nickel	0	1.3E+02	1.4E+01	na	4.6E+03	4.7E+02	1.2E+03	na	5.9E+05	3.1E+01	3.4E+00	na	4.6E+02	2.5E+03	3.1E+02	na	5.9E+04	**4.7E+02**	**3.1E+02**	**na**	**5.9E+04**
Nitrate (as N)	0	--	--	na	--	--	--	na	--	--	--	na	--	--	--	na	--	**--**	**--**	**na**	**--**
Nitrobenzene	0	--	--	na	6.9E+02	--	--	na	8.8E+04	--	--	na	6.9E+01	--	--	na	8.8E+03	**--**	**--**	**na**	**8.8E+03**
N-Nitrosodimethylamine[C]	0	--	--	na	3.0E+01	--	--	na	1.1E+04	--	--	na	3.0E+00	--	--	na	1.1E+03	**--**	**--**	**na**	**1.1E+03**
N-Nitrosodiphenylamine[C]	0	--	--	na	6.0E+01	--	--	na	2.2E+04	--	--	na	6.0E+00	--	--	na	2.2E+03	**--**	**--**	**na**	**2.2E+03**
N-Nitrosodi-n-propylamine[C]	0	--	--	na	5.1E+00	--	--	na	1.9E+03	--	--	na	5.1E-01	--	--	na	1.9E+02	**--**	**--**	**na**	**1.9E+02**
Nonylphenol	0	2.8E+01	6.6E+00	--	--	1.1E+02	6.0E+02	na	--	7.0E+00	1.7E+00	--	--	5.6E+02	1.5E+02	--	--	**1.1E+02**	**1.5E+02**	**na**	**--**
Parathion	0	6.5E-02	1.3E-02	na	--	2.4E-01	1.2E+00	na	--	1.6E-02	3.3E-03	na	--	1.3E+00	3.0E-01	na	--	**2.4E-01**	**3.0E-01**	**na**	**--**
PCB Total[C]	0	--	1.4E-02	na	6.4E-04	--	1.3E+00	na	2.3E-01	--	3.5E-03	na	6.4E-05	--	3.2E-01	na	2.3E-02	**--**	**3.2E-01**	**na**	**2.3E-02**
Pentachlorophenol [C]	0	9.1E+00	7.1E+00	na	3.0E+01	3.4E+01	6.5E+02	na	1.1E+04	2.3E+00	1.8E+00	na	3.0E+00	1.9E+02	1.6E+02	na	1.1E+03	**3.4E+01**	**1.6E+02**	**na**	**1.1E+03**
Phenol	0	--	--	na	8.6E+05	--	--	na	1.1E+08	--	--	na	8.6E+04	--	--	na	1.1E+07	**--**	**--**	**na**	**1.1E+07**
Pyrene	0	--	--	na	4.0E+03	--	--	na	5.1E+05	--	--	na	4.0E+02	--	--	na	5.1E+04	**--**	**--**	**na**	**5.1E+04**
Radionuclides	0	--	--	na	--	--	--	na	--	--	--	na	--	--	--	na	--	**--**	**--**	**na**	**--**
Gross Alpha Activity (pCi/L)	0	--	--	na	--	--	--	na	--	--	--	na	--	--	--	na	--	**--**	**--**	**na**	**--**
Beta and Photon Activity (mrem/yr)	0	--	--	na	--	--	--	na	--	--	--	na	--	--	--	na	--	**--**	**--**	**na**	**--**
Radium 226 + 228 (pCi/L)	0	--	--	na	--	--	--	na	--	--	--	na	--	--	--	na	--	**--**	**--**	**na**	**--**
Uranium (ug/l)	0	--	--	na	--	--	--	na	--	--	--	na	--	--	--	na	--	**--**	**--**	**na**	**--**

Parameter	Background	Water Quality Criteria				Wasteload Allocations				Antidegradation Baseline				Antidegradation Allocations				**Most Limiting Allocations**			
(ug/l unless noted)	Conc.	Acute	Chronic	HH (PWS)	HH	Acute	Chronic	HH (PWS)	HH	Acute	Chronic	HH (PWS)	HH	Acute	Chronic	HH (PWS)	HH	**Acute**	**Chronic**	**HH (PWS)**	**HH**
Selenium, Total Recoverable	0	2.0E+01	5.0E+00	na	4.2E+03	7.5E+01	4.6E+02	na	5.3E+05	5.0E+00	1.3E+00	na	4.2E+02	4.0E+02	1.1E+02	na	5.3E+04	**7.5E+01**	**1.1E+02**	**na**	**5.3E+04**
Silver	0	1.6E+00	--	na	--	6.1E+00	--	na	--	3.9E-01	--	na	--	3.1E+01	--	na	--	**6.1E+00**	**--**	**na**	**--**
Sulfate	0	--	--	na	--	--	--	na	--	--	--	na	--	--	--	na	--	**--**	**--**	**na**	**--**
1,1,2,2-Tetrachloroethane[C]	0	--	--	na	4.0E+01	--	--	na	1.5E+04	--	--	na	4.0E+00	--	--	na	1.5E+03	**--**	**--**	**na**	**1.5E+03**
Tetrachloroethylene[C]	0	--	--	na	3.3E+01	--	--	na	1.2E+04	--	--	na	3.3E+00	--	--	na	1.2E+03	**--**	**--**	**na**	**1.2E+03**
Thallium	0	--	--	na	4.7E-01	--	--	na	6.0E+01	--	--	na	4.7E-02	--	--	na	6.0E+00	**--**	**--**	**na**	**6.0E+00**
Toluene	0	--	--	na	6.0E+03	--	--	na	7.6E+05	--	--	na	6.0E+02	--	--	na	7.6E+04	**--**	**--**	**na**	**7.6E+04**
Total dissolved solids	0	--	--	na	--	--	--	na	--	--	--	na	--	--	--	na	--	**--**	**--**	**na**	**--**
Toxaphene [C]	0	7.3E-01	2.0E-04	na	2.8E-03	2.7E+00	1.8E-02	na	1.0E+00	1.8E-01	5.0E-05	na	2.8E-04	1.5E+01	4.6E-03	na	1.0E-01	**2.7E+00**	**4.6E-03**	**na**	**1.0E-01**
Tributyltin	0	4.6E-01	7.2E-02	na	--	1.7E+00	6.6E+00	na	--	1.2E-01	1.8E-02	na	--	9.3E+00	1.6E+00	na	--	**1.7E+00**	**1.6E+00**	**na**	**--**
1,2,4-Trichlorobenzene	0	--	--	na	7.0E+01	--	--	na	8.9E+03	--	--	na	7.0E+00	--	--	na	8.9E+02	**--**	**--**	**na**	**8.9E+02**
1,1,2-Trichloroethane[C]	0	--	--	na	1.6E+02	--	--	na	5.8E+04	--	--	na	1.6E+01	--	--	na	5.8E+03	**--**	**--**	**na**	**5.8E+03**
Trichloroethylene [C]	0	--	--	na	3.0E+02	--	--	na	1.1E+05	--	--	na	3.0E+01	--	--	na	1.1E+04	**--**	**--**	**na**	**1.1E+04**
2,4,6-Trichlorophenol [C]	0	--	--	na	2.4E+01	--	--	na	8.7E+03	--	--	na	2.4E+00	--	--	na	8.7E+02	**--**	**--**	**na**	**8.7E+02**
2-(2,4,5-Trichlorophenoxy) propionic acid (Silvex)	0	--	--	na	--	--	--	na	--	--	--	na	--	--	--	na	--	**--**	**--**	**na**	**--**
Vinyl Chloride[C]	0	--	--	na	2.4E+01	--	--	na	8.7E+03	--	--	na	2.4E+00	--	--	na	8.7E+02	**--**	**--**	**na**	**8.7E+02**
Zinc	0	8.1E+01	7.9E+01	na	2.6E+04	3.0E+02	7.3E+03	na	3.3E+06	2.0E+01	2.0E+01	na	2.6E+03	1.6E+03	1.8E+03	na	3.3E+05	**3.0E+02**	**1.8E+03**	**na**	**3.3E+05**

Notes:

1. All concentrations expressed as micrograms/liter (ug/l), unless noted otherwise
2. Discharge flow is highest monthly average or Form 2C maximum for Industries and design flow for Municipals
3. Metals measured as Dissolved, unless specified otherwise
4. "C" indicates a carcinogenic parameter
5. Regular WLAs are mass balances (minus background concentration) using the % of stream flow entered above under Mixing Information.
   Antidegradation WLAs are based upon a complete mix.
6. Antideg. Baseline = (0.25(WQC - background conc.) + background conc.) for acute and chronic
   = (0.1(WQC - background conc.) + background conc.) for human health
7. WLAs established at the following stream flows: 1Q10 for Acute, 30Q10 for Chronic Ammonia, 7Q10 for Other Chronic, 30Q5 for Non-carcinogens and
   Harmonic Mean for Carcinogens. To apply mixing ratios from a model set the stream flow equal to (mixing ratio - 1), effluent flow equal to 1 and 100% mix.

Metal	Target Value (SSTV)
Antimony	8.1E+03
Arsenic	5.1E+02
Barium	na
Cadmium	3.6E+00
Chromium III	6.0E+02
Chromium VI	2.4E+01
Copper	1.3E+01
Iron	na
Lead	1.0E+02
Manganese	na
Mercury	2.1E+00
Nickel	1.9E+02
Selenium	3.0E+01
Silver	2.4E+00
Zinc	1.2E+02

Note: do not use QL's lower than the minimum QL's provided in agency guidance

FRESHWATER
WATER QUALITY CRITERIA / WASTELOAD ALLOCATION ANALYSIS

Facility Name: BPS Internal Outfalls 501, 502, 503, 504, and 505 Permit No.: VA0004138

Receiving Stream: James River

Version: OWP Guidance Memo 00-2011 (8/24/00)

Stream Information		
Mean Hardness (as CaCO3) =	62.5	mg/L
90% Temperature (Annual) =	26.86	deg C
90% Temperature (Wet season) =		deg C
90% Maximum pH =	8.03	SU
10% Maximum pH =	7.06	SU
Tier Designation (1 or 2) =	2	
Public Water Supply (PWS) Y/N? =	N	
Trout Present Y/N? =	N	
Early Life Stages Present Y/N? =	Y	

Stream Flows		
1Q10 (Annual) =	341	MGD
7Q10 (Annual) =	389	MGD
30Q10 (Annual) =	480	MGD
1Q10 (Wet season) =		MGD
30Q10 (Wet season) =		MGD
30Q5 =	542	MGD
Harmonic Mean =	1553	MGD

Mixing Information		
Annual - 1Q10 Mix =	3.54	%
- 7Q10 Mix =	100	%
- 30Q10 Mix =	100	%
Wet Season - 1Q10 Mix =		%
- 30Q10 Mix =		%

Effluent Information		
Mean Hardness (as CaCO3) =	100	mg/L
90% Temp (Annual) =	28.3	deg C
90% Temp (Wet season) =		deg C
90% Maximum pH =	8.3	SU
10% Maximum pH =	7	SU
Discharge Flow =	10.2912	MGD

Parameter	Background	Water Quality Criteria				Wasteload Allocations				Antidegradation Baseline				Antidegradation Allocations				**Most Limiting Allocations**			
(ug/l unless noted)	Conc.	Acute	Chronic	HH (PWS)	HH	Acute	Chronic	HH (PWS)	HH	Acute	Chronic	HH (PWS)	HH	Acute	Chronic	HH (PWS)	HH	**Acute**	**Chronic**	**HH (PWS)**	**HH**
Acenapthene	0	--	--	na	9.9E+02	--	--	na	5.3E+04	--	--	na	9.9E+01	--	--	na	5.3E+03	**--**	**--**	**na**	**5.3E+03**
Acrolein	0	--	--	na	9.3E+00	--	--	na	5.0E+02	--	--	na	9.3E-01	--	--	na	5.0E+01	**--**	**--**	**na**	**5.0E+01**
Acrylonitrile[C]	0	--	--	na	2.5E+00	--	--	na	3.8E+02	--	--	na	2.5E-01	--	--	na	3.8E+01	**--**	**--**	**na**	**3.8E+01**
Aldrin [C]	0	3.0E+00	--	na	5.0E-04	6.5E+00	--	na	7.6E-02	7.5E-01	--	na	5.0E-05	2.6E+01	--	na	7.6E-03	**6.5E+00**	**--**	**na**	**7.6E-03**
Ammonia-N (mg/l) (Yearly)	0	6.51E+00	1.04E+00	na	--	1.41E+01	4.97E+01	na	--	1.96E+00	2.61E-01	na	--	6.70E+01	1.24E+01	na	--	**1.41E+01**	**1.24E+01**	**na**	**--**
Ammonia-N (mg/l) (High Flow)	0	4.71E+00	1.52E+00	na	--	4.71E+00	1.52E+00	na	--	1.18E+00	3.81E-01	na	--	1.18E+00	3.81E-01	na	--	**1.18E+00**	**3.81E-01**	**na**	**--**
Anthracene	0	--	--	na	4.0E+04	--	--	na	2.1E+06	--	--	na	4.0E+03	--	--	na	2.1E+05	**--**	**--**	**na**	**2.1E+05**
Antimony	0	--	--	na	6.4E+02	--	--	na	3.4E+04	--	--	na	6.4E+01	--	--	na	3.4E+03	**--**	**--**	**na**	**3.4E+03**
Arsenic	0	3.4E+02	1.5E+02	na	--	7.4E+02	5.8E+03	na	--	8.5E+01	3.8E+01	na	--	2.9E+03	1.5E+03	na	--	**7.4E+02**	**1.5E+03**	**na**	**--**
Barium	0	--	--	na	--	--	--	na	--	--	--	na	--	--	--	na	--	**--**	**--**	**na**	**--**
Benzene [C]	0	--	--	na	5.1E+02	--	--	na	7.7E+04	--	--	na	5.1E+01	--	--	na	7.7E+03	**--**	**--**	**na**	**7.7E+03**
Benzidine[C]	0	--	--	na	2.0E-03	--	--	na	3.0E-01	--	--	na	2.0E-04	--	--	na	3.0E-02	**--**	**--**	**na**	**3.0E-02**
Benzo (a) anthracene [C]	0	--	--	na	1.8E-01	--	--	na	2.7E+01	--	--	na	1.8E-02	--	--	na	2.7E+00	**--**	**--**	**na**	**2.7E+00**
Benzo (b) fluoranthene [C]	0	--	--	na	1.8E-01	--	--	na	2.7E+01	--	--	na	1.8E-02	--	--	na	2.7E+00	**--**	**--**	**na**	**2.7E+00**
Benzo (k) fluoranthene [C]	0	--	--	na	1.8E-01	--	--	na	2.7E+01	--	--	na	1.8E-02	--	--	na	2.7E+00	**--**	**--**	**na**	**2.7E+00**
Benzo (a) pyrene [C]	0	--	--	na	1.8E-01	--	--	na	2.7E+01	--	--	na	1.8E-02	--	--	na	2.7E+00	**--**	**--**	**na**	**2.7E+00**
Bis2-Chloroethyl Ether [C]	0	--	--	na	5.3E+00	--	--	na	8.1E+02	--	--	na	5.3E-01	--	--	na	8.1E+01	**--**	**--**	**na**	**8.1E+01**
Bis2-Chloroisopropyl Ether	0	--	--	na	6.5E+04	--	--	na	3.5E+06	--	--	na	6.5E+03	--	--	na	3.5E+05	**--**	**--**	**na**	**3.5E+05**
Bis 2-Ethylhexyl Phthalate [C]	0	--	--	na	2.2E+01	--	--	na	3.3E+03	--	--	na	2.2E+00	--	--	na	3.3E+02	**--**	**--**	**na**	**3.3E+02**
Bromoform [C]	0	--	--	na	1.4E+03	--	--	na	2.1E+05	--	--	na	1.4E+02	--	--	na	2.1E+04	**--**	**--**	**na**	**2.1E+04**
Butylbenzylphthalate	0	--	--	na	1.9E+03	--	--	na	1.0E+05	--	--	na	1.9E+02	--	--	na	1.0E+04	**--**	**--**	**na**	**1.0E+04**
Cadmium	0	3.0E+00	7.9E-01	na	--	6.6E+00	3.1E+01	na	--	5.9E-01	2.0E-01	na	--	2.0E+01	7.7E+00	na	--	**6.6E+00**	**7.7E+00**	**na**	**--**
Carbon Tetrachloride [C]	0	--	--	na	1.6E+01	--	--	na	2.4E+03	--	--	na	1.6E+00	--	--	na	2.4E+02	**--**	**--**	**na**	**2.4E+02**
Chlordane [C]	0	2.4E+00	4.3E-03	na	8.1E-03	5.2E+00	1.7E-01	na	1.2E+00	6.0E-01	1.1E-03	na	8.1E-04	2.0E+01	4.2E-02	na	1.2E-01	**5.2E+00**	**4.2E-02**	**na**	**1.2E-01**
Chloride	0	8.6E+05	2.3E+05	na	--	1.9E+06	8.9E+06	na	--	2.2E+05	5.8E+04	na	--	7.3E+06	2.2E+06	na	--	**1.9E+06**	**2.2E+06**	**na**	**--**
TRC	0	1.9E+01	1.1E+01	na	--	4.1E+01	4.3E+02	na	--	4.8E+00	2.8E+00	na	--	1.6E+02	1.1E+02	na	--	**4.1E+01**	**1.1E+02**	**na**	**--**
Chlorobenzene	0	--	--	na	1.6E+03	--	--	na	8.6E+04	--	--	na	1.6E+02	--	--	na	8.6E+03	**--**	**--**	**na**	**8.6E+03**

Parameter	Background	Water Quality Criteria				Wasteload Allocations				Antidegradation Baseline				Antidegradation Allocations				**Most Limiting Allocations**			
(ug/l unless noted)	Conc.	Acute	Chronic	HH (PWS)	HH	Acute	Chronic	HH (PWS)	HH	Acute	Chronic	HH (PWS)	HH	Acute	Chronic	HH (PWS)	HH	**Acute**	**Chronic**	**HH (PWS)**	**HH**
Chlorodibromomethane[C]	0	--	--	na	1.3E+02	--	--	na	2.0E+04	--	--	na	1.3E+01	--	--	na	2.0E+03	**--**	**--**	**na**	**2.0E+03**
Chloroform	0	--	--	na	1.1E+04	--	--	na	5.9E+05	--	--	na	1.1E+03	--	--	na	5.9E+04	**--**	**--**	**na**	**5.9E+04**
2-Chloronaphthalene	0	--	--	na	1.6E+03	--	--	na	8.6E+04	--	--	na	1.6E+02	--	--	na	8.6E+03	**--**	**--**	**na**	**8.6E+03**
2-Chlorophenol	0	--	--	na	1.5E+02	--	--	na	8.0E+03	--	--	na	1.5E+01	--	--	na	8.0E+02	**--**	**--**	**na**	**8.0E+02**
Chlorpyrifos	0	8.3E-02	4.1E-02	na	--	1.8E-01	1.6E+00	na	--	2.1E-02	1.0E-02	na	--	7.1E-01	4.0E-01	na	--	**1.8E-01**	**4.0E-01**	**na**	**--**
Chromium III	0	4.7E+02	5.1E+01	na	--	1.0E+03	2.0E+03	na	--	9.8E+01	1.3E+01	na	--	3.4E+03	5.0E+02	na	--	**1.0E+03**	**5.0E+02**	**na**	**--**
Chromium VI	0	1.6E+01	1.1E+01	na	--	3.5E+01	4.3E+02	na	--	4.0E+00	2.8E+00	na	--	1.4E+02	1.1E+02	na	--	**3.5E+01**	**1.1E+02**	**na**	**--**
Chromium, Total	0	--	--	1.0E+02	--	--	--	na	--	--	--	1.0E+01	--	--	--	5.4E+02	--	**--**	**--**	**na**	**--**
Chrysene [C]	0	--	--	na	1.8E-02	--	--	na	2.7E+00	--	--	na	1.8E-03	--	--	na	2.7E-01	**--**	**--**	**na**	**2.7E-01**
Copper	0	1.1E+01	6.1E+00	na	--	2.4E+01	2.4E+02	na	--	2.2E+00	1.5E+00	na	--	7.5E+01	5.9E+01	na	--	**2.4E+01**	**5.9E+01**	**na**	**--**
Cyanide, Free	0	2.2E+01	5.2E+00	na	1.6E+04	4.8E+01	2.0E+02	na	8.6E+05	5.5E+00	1.3E+00	na	1.6E+03	1.9E+02	5.0E+01	na	8.6E+04	**4.8E+01**	**5.0E+01**	**na**	**8.6E+04**
DDD [C]	0	--	--	na	3.1E-03	--	--	na	4.7E-01	--	--	na	3.1E-04	--	--	na	4.7E-02	**--**	**--**	**na**	**4.7E-02**
DDE [C]	0	--	--	na	2.2E-03	--	--	na	3.3E-01	--	--	na	2.2E-04	--	--	na	3.3E-02	**--**	**--**	**na**	**3.3E-02**
DDT [C]	0	1.1E+00	1.0E-03	na	2.2E-03	2.4E+00	3.9E-02	na	3.3E-01	2.8E-01	2.5E-04	na	2.2E-04	9.4E+00	9.7E-03	na	3.3E-02	**2.4E+00**	**9.7E-03**	**na**	**3.3E-02**
Demeton	0	--	1.0E-01	na	--	--	3.9E+00	na	--	--	2.5E-02	na	--	--	9.7E-01	na	--	**--**	**9.7E-01**	**na**	**--**
Diazinon	0	1.7E-01	1.7E-01	na	--	3.7E-01	6.6E+00	na	--	4.3E-02	4.3E-02	na	--	1.5E+00	1.6E+00	na	--	**3.7E-01**	**1.6E+00**	**na**	**--**
Dibenz(a,h)anthracene [C]	0	--	--	na	1.8E-01	--	--	na	2.7E+01	--	--	na	1.8E-02	--	--	na	2.7E+00	**--**	**--**	**na**	**2.7E+00**
1,2-Dichlorobenzene	0	--	--	na	1.3E+03	--	--	na	7.0E+04	--	--	na	1.3E+02	--	--	na	7.0E+03	**--**	**--**	**na**	**7.0E+03**
1,3-Dichlorobenzene	0	--	--	na	9.6E+02	--	--	na	5.2E+04	--	--	na	9.6E+01	--	--	na	5.2E+03	**--**	**--**	**na**	**5.2E+03**
1,4-Dichlorobenzene	0	--	--	na	1.9E+02	--	--	na	1.0E+04	--	--	na	1.9E+01	--	--	na	1.0E+03	**--**	**--**	**na**	**1.0E+03**
3,3-Dichlorobenzidine[C]	0	--	--	na	2.8E-01	--	--	na	4.3E+01	--	--	na	2.8E-02	--	--	na	4.3E+00	**--**	**--**	**na**	**4.3E+00**
Dichlorobromomethane [C]	0	--	--	na	1.7E+02	--	--	na	2.6E+04	--	--	na	1.7E+01	--	--	na	2.6E+03	**--**	**--**	**na**	**2.6E+03**
1,2-Dichloroethane [C]	0	--	--	na	3.7E+02	--	--	na	5.6E+04	--	--	na	3.7E+01	--	--	na	5.6E+03	**--**	**--**	**na**	**5.6E+03**
1,1-Dichloroethylene	0	--	--	na	7.1E+03	--	--	na	3.8E+05	--	--	na	7.1E+02	--	--	na	3.8E+04	**--**	**--**	**na**	**3.8E+04**
1,2-trans-dichloroethylene	0	--	--	na	1.0E+04	--	--	na	5.4E+05	--	--	na	1.0E+03	--	--	na	5.4E+04	**--**	**--**	**na**	**5.4E+04**
2,4-Dichlorophenol	0	--	--	na	2.9E+02	--	--	na	1.6E+04	--	--	na	2.9E+01	--	--	na	1.6E+03	**--**	**--**	**na**	**1.6E+03**
2,4-Dichlorophenoxy acetic acid (2,4-D)	0	--	--	na	--	--	--	na	--	--	--	na	--	--	--	na	--	**--**	**--**	**na**	**--**
1,2-Dichloropropane[C]	0	--	--	na	1.5E+02	--	--	na	2.3E+04	--	--	na	1.5E+01	--	--	na	2.3E+03	**--**	**--**	**na**	**2.3E+03**
1,3-Dichloropropene [C]	0	--	--	na	2.1E+02	--	--	na	3.2E+04	--	--	na	2.1E+01	--	--	na	3.2E+03	**--**	**--**	**na**	**3.2E+03**
Dieldrin [C]	0	2.4E-01	5.6E-02	na	5.4E-04	5.2E-01	2.2E+00	na	8.2E-02	6.0E-02	1.4E-02	na	5.4E-05	2.0E+00	5.4E-01	na	8.2E-03	**5.2E-01**	**5.4E-01**	**na**	**8.2E-03**
Diethyl Phthalate	0	--	--	na	4.4E+04	--	--	na	2.4E+06	--	--	na	4.4E+03	--	--	na	2.4E+05	**--**	**--**	**na**	**2.4E+05**
2,4-Dimethylphenol	0	--	--	na	8.5E+02	--	--	na	4.6E+04	--	--	na	8.5E+01	--	--	na	4.6E+03	**--**	**--**	**na**	**4.6E+03**
Dimethyl Phthalate	0	--	--	na	1.1E+06	--	--	na	5.9E+07	--	--	na	1.1E+05	--	--	na	5.9E+06	**--**	**--**	**na**	**5.9E+06**
Di-n-Butyl Phthalate	0	--	--	na	4.5E+03	--	--	na	2.4E+05	--	--	na	4.5E+02	--	--	na	2.4E+04	**--**	**--**	**na**	**2.4E+04**
2,4 Dinitrophenol	0	--	--	na	5.3E+03	--	--	na	2.8E+05	--	--	na	5.3E+02	--	--	na	2.8E+04	**--**	**--**	**na**	**2.8E+04**
2-Methyl-4,6-Dinitrophenol	0	--	--	na	2.8E+02	--	--	na	1.5E+04	--	--	na	2.8E+01	--	--	na	1.5E+03	**--**	**--**	**na**	**1.5E+03**
2,4-Dinitrotoluene [C]	0	--	--	na	3.4E+01	--	--	na	5.2E+03	--	--	na	3.4E+00	--	--	na	5.2E+02	**--**	**--**	**na**	**5.2E+02**
Dioxin 2,3,7,8-tetrachlorodibenzo-p-dioxin	0	--	--	na	5.1E-08	--	--	na	2.7E-06	--	--	na	5.1E-09	--	--	na	2.7E-07	**--**	**--**	**na**	**2.7E-07**
1,2-Diphenylhydrazine[C]	0	--	--	na	2.0E+00	--	--	na	3.0E+02	--	--	na	2.0E-01	--	--	na	3.0E+01	**--**	**--**	**na**	**3.0E+01**
Alpha-Endosulfan	0	2.2E-01	5.6E-02	na	8.9E+01	4.8E-01	2.2E+00	na	4.8E+03	5.5E-02	1.4E-02	na	8.9E+00	1.9E+00	5.4E-01	na	4.8E+02	**4.8E-01**	**5.4E-01**	**na**	**4.8E+02**
Beta-Endosulfan	0	2.2E-01	5.6E-02	na	8.9E+01	4.8E-01	2.2E+00	na	4.8E+03	5.5E-02	1.4E-02	na	8.9E+00	1.9E+00	5.4E-01	na	4.8E+02	**4.8E-01**	**5.4E-01**	**na**	**4.8E+02**
Alpha + Beta Endosulfan	0	2.2E-01	5.6E-02	--	--	4.8E-01	2.2E+00	--	--	5.5E-02	1.4E-02	--	--	1.9E+00	5.4E-01	--	--	**4.8E-01**	**5.4E-01**	**--**	**--**
Endosulfan Sulfate	0	--	--	na	8.9E+01	--	--	na	4.8E+03	--	--	na	8.9E+00	--	--	na	4.8E+02	**--**	**--**	**na**	**4.8E+02**
Endrin	0	8.6E-02	3.6E-02	na	6.0E-02	1.9E-01	1.4E+00	na	3.2E+00	2.2E-02	9.0E-03	na	6.0E-03	7.3E-01	3.5E-01	na	3.2E-01	**1.9E-01**	**3.5E-01**	**na**	**3.2E-01**
Endrin Aldehyde	0	--	--	na	3.0E-01	--	--	na	1.6E+01	--	--	na	3.0E-02	--	--	na	1.6E+00	**--**	**--**	**na**	**1.6E+00**

Parameter	Background	Water Quality Criteria				Wasteload Allocations				Antidegradation Baseline				Antidegradation Allocations				**Most Limiting Allocations**			
(ug/l unless noted)	Conc.	Acute	Chronic	HH (PWS)	HH	Acute	Chronic	HH (PWS)	HH	Acute	Chronic	HH (PWS)	HH	Acute	Chronic	HH (PWS)	HH	**Acute**	**Chronic**	**HH (PWS)**	**HH**
Ethylbenzene	0	--	--	na	2.1E+03	--	--	na	1.1E+05	--	--	na	2.1E+02	--	--	na	1.1E+04	**--**	**--**	**na**	**1.1E+04**
Fluoranthene	0	--	--	na	1.4E+02	--	--	na	7.5E+03	--	--	na	1.4E+01	--	--	na	7.5E+02	**--**	**--**	**na**	**7.5E+02**
Fluorene	0	--	--	na	5.3E+03	--	--	na	2.8E+05	--	--	na	5.3E+02	--	--	na	2.8E+04	**--**	**--**	**na**	**2.8E+04**
Foaming Agents	0	--	--	na	--	--	--	na	--	--	--	na	--	--	--	na	--	**--**	**--**	**na**	**--**
Guthion	0	--	1.0E-02	na	--	--	3.9E-01	na	--	--	2.5E-03	na	--	--	9.7E-02	na	--	**--**	**9.7E-02**	**na**	**--**
Heptachlor [C]	0	5.2E-01	3.8E-03	na	7.9E-04	1.1E+00	1.5E-01	na	1.2E-01	1.3E-01	9.5E-04	na	7.9E-05	4.4E+00	3.7E-02	na	1.2E-02	**1.1E+00**	**3.7E-02**	**na**	**1.2E-02**
Heptachlor Epoxide[C]	0	5.2E-01	3.8E-03	na	3.9E-04	1.1E+00	1.5E-01	na	5.9E-02	1.3E-01	9.5E-04	na	3.9E-05	4.4E+00	3.7E-02	na	5.9E-03	**1.1E+00**	**3.7E-02**	**na**	**5.9E-03**
Hexachlorobenzene[C]	0	--	--	na	2.9E-03	--	--	na	4.4E-01	--	--	na	2.9E-04	--	--	na	4.4E-02	**--**	**--**	**na**	**4.4E-02**
Hexachlorobutadiene[C]	0	--	--	na	1.8E+02	--	--	na	2.7E+04	--	--	na	1.8E+01	--	--	na	2.7E+03	**--**	**--**	**na**	**2.7E+03**
Hexachlorocyclohexane Alpha-BHC[C]	0	--	--	na	4.9E-02	--	--	na	7.4E+00	--	--	na	4.9E-03	--	--	na	7.4E-01	**--**	**--**	**na**	**7.4E-01**
Hexachlorocyclohexane Beta-BHC[C]	0	--	--	na	1.7E-01	--	--	na	2.6E+01	--	--	na	1.7E-02	--	--	na	2.6E+00	**--**	**--**	**na**	**2.6E+00**
Hexachlorocyclohexane Gamma-BHC[C] (Lindane)	0	9.5E-01	na	na	1.8E+00	2.1E+00	--	na	2.7E+02	2.4E-01	--	na	1.8E-01	8.1E+00	--	na	2.7E+01	**2.1E+00**	**--**	**na**	**2.7E+01**
Hexachlorocyclopentadiene	0	--	--	na	1.1E+03	--	--	na	5.9E+04	--	--	na	1.1E+02	--	--	na	5.9E+03	**--**	**--**	**na**	**5.9E+03**
Hexachloroethane[C]	0	--	--	na	3.3E+01	--	--	na	5.0E+03	--	--	na	3.3E+00	--	--	na	5.0E+02	**--**	**--**	**na**	**5.0E+02**
Hydrogen Sulfide	0	--	2.0E+00	na	--	--	7.8E+01	na	--	--	5.0E-01	na	--	--	1.9E+01	na	--	**--**	**1.9E+01**	**na**	**--**
Indeno (1,2,3-cd) pyrene [C]	0	--	--	na	1.8E-01	--	--	na	2.7E+01	--	--	na	1.8E-02	--	--	na	2.7E+00	**--**	**--**	**na**	**2.7E+00**
Iron	0	--	--	na	--	--	--	na	--	--	--	na	--	--	--	na	--	**--**	**--**	**na**	**--**
Isophorone[C]	0	--	--	na	9.6E+03	--	--	na	1.5E+06	--	--	na	9.6E+02	--	--	na	1.5E+05	**--**	**--**	**na**	**1.5E+05**
Kepone	0	--	0.0E+00	na	--	--	0.0E+00	na	--	--	0.0E+00	na	--	--	0.0E+00	na	--	**--**	**0.0E+00**	**na**	**--**
Lead	0	8.9E+01	7.6E+00	na	--	1.9E+02	2.9E+02	na	--	1.7E+01	1.9E+00	na	--	5.7E+02	7.3E+01	na	--	**1.9E+02**	**7.3E+01**	**na**	**--**
Malathion	0	--	1.0E-01	na	--	--	3.9E+00	na	--	--	2.5E-02	na	--	--	9.7E-01	na	--	**--**	**9.7E-01**	**na**	**--**
Manganese	0	--	--	na	--	--	--	na	--	--	--	na	--	--	--	na	--	**--**	**--**	**na**	**--**
Mercury	0	1.4E+00	7.7E-01	- -	- -	3.0E+00	3.0E+01	- -	- -	3.5E-01	1.9E-01	- -	--	1.2E+01	7.5E+00	- -	--	**3.0E+00**	**7.5E+00**	**- -**	**- -**
Methyl Bromide	0	--	--	na	1.5E+03	--	--	na	8.0E+04	--	--	na	1.5E+02	--	--	na	8.0E+03	**--**	**--**	**na**	**8.0E+03**
Methylene Chloride [C]	0	--	--	na	5.9E+03	--	--	na	9.0E+05	--	--	na	5.9E+02	--	--	na	9.0E+04	**--**	**--**	**na**	**9.0E+04**
Methoxychlor	0	--	3.0E-02	na	--	--	1.2E+00	na	--	--	7.5E-03	na	--	--	2.9E-01	na	--	**--**	**2.9E-01**	**na**	**--**
Mirex	0	--	0.0E+00	na	--	--	0.0E+00	na	--	--	0.0E+00	na	--	--	0.0E+00	na	--	**--**	**0.0E+00**	**na**	**--**
Nickel	0	1.5E+02	1.4E+01	na	4.6E+03	3.3E+02	5.4E+02	na	2.5E+05	3.1E+01	3.4E+00	na	4.6E+02	1.1E+03	1.3E+02	na	2.5E+04	**3.3E+02**	**1.3E+02**	**na**	**2.5E+04**
Nitrate (as N)	0	--	--	na	--	--	--	na	--	--	--	na	--	--	--	na	--	**--**	**--**	**na**	**--**
Nitrobenzene	0	--	--	na	6.9E+02	--	--	na	3.7E+04	--	--	na	6.9E+01	--	--	na	3.7E+03	**--**	**--**	**na**	**3.7E+03**
N-Nitrosodimethylamine[C]	0	--	--	na	3.0E+01	--	--	na	4.6E+03	--	--	na	3.0E+00	--	--	na	4.6E+02	**--**	**--**	**na**	**4.6E+02**
N-Nitrosodiphenylamine[C]	0	--	--	na	6.0E+01	--	--	na	9.1E+03	--	--	na	6.0E+00	--	--	na	9.1E+02	**--**	**--**	**na**	**9.1E+02**
N-Nitrosodi-n-propylamine[C]	0	--	--	na	5.1E+00	--	--	na	7.7E+02	--	--	na	5.1E-01	--	--	na	7.7E+01	**--**	**--**	**na**	**7.7E+01**
Nonylphenol	0	2.8E+01	6.6E+00	--	--	6.1E+01	2.6E+02	na	--	7.0E+00	1.7E+00	--	--	2.4E+02	6.4E+01	--	--	**6.1E+01**	**6.4E+01**	**na**	**--**
Parathion	0	6.5E-02	1.3E-02	na	--	1.4E-01	5.0E-01	na	--	1.6E-02	3.3E-03	na	--	5.5E-01	1.3E-01	na	--	**1.4E-01**	**1.3E-01**	**na**	**--**
PCB Total[C]	0	--	1.4E-02	na	6.4E-04	--	5.4E-01	na	9.7E-02	--	3.5E-03	na	6.4E-05	--	1.4E-01	na	9.7E-03	**--**	**1.4E-01**	**na**	**9.7E-03**
Pentachlorophenol [C]	0	9.0E+00	7.1E+00	na	3.0E+01	2.0E+01	2.8E+02	na	4.6E+03	2.3E+00	1.8E+00	na	3.0E+00	7.9E+01	6.9E+01	na	4.6E+02	**2.0E+01**	**6.9E+01**	**na**	**4.6E+02**
Phenol	0	--	--	na	8.6E+05	--	--	na	4.6E+07	--	--	na	8.6E+04	--	--	na	4.6E+06	**--**	**--**	**na**	**4.6E+06**
Pyrene	0	--	--	na	4.0E+03	--	--	na	2.1E+05	--	--	na	4.0E+02	--	--	na	2.1E+04	**--**	**--**	**na**	**2.1E+04**
Radionuclides	0	--	--	na	--	--	--	na	--	--	--	na	--	--	--	na	--	**--**	**--**	**na**	**--**
Gross Alpha Activity (pCi/L)	0	--	--	na	--	--	--	na	--	--	--	na	--	--	--	na	--	**--**	**--**	**na**	**--**
Beta and Photon Activity (mrem/yr)	0	--	--	na	--	--	--	na	--	--	--	na	--	--	--	na	--	**--**	**--**	**na**	**--**
Radium 226 + 228 (pCi/L)	0	--	--	na	--	--	--	na	--	--	--	na	--	--	--	na	--	**--**	**--**	**na**	**--**
Uranium (ug/l)	0	--	--	na	--	--	--	na	--	--	--	na	--	--	--	na	--	**--**	**--**	**na**	**--**

Parameter	Background	Water Quality Criteria				Wasteload Allocations				Antidegradation Baseline				Antidegradation Allocations				**Most Limiting Allocations**			
(ug/l unless noted)	Conc.	Acute	Chronic	HH (PWS)	HH	Acute	Chronic	HH (PWS)	HH	Acute	Chronic	HH (PWS)	HH	Acute	Chronic	HH (PWS)	HH	**Acute**	**Chronic**	**HH (PWS)**	**HH**
Selenium, Total Recoverable	0	2.0E+01	5.0E+00	na	4.2E+03	4.3E+01	1.9E+02	na	2.3E+05	5.0E+00	1.3E+00	na	4.2E+02	1.7E+02	4.8E+01	na	2.3E+04	**4.3E+01**	**4.8E+01**	**na**	**2.3E+04**
Silver	0	2.3E+00	--	na	--	5.1E+00	--	na	--	4.0E-01	--	na	--	1.4E+01	--	na	--	**5.1E+00**	**--**	**na**	**--**
Sulfate	0	--	--	na	--	--	--	na	--	--	--	na	--	--	--	na	--	**--**	**--**	**na**	**--**
1,1,2,2-Tetrachloroethane[C]	0	--	--	na	4.0E+01	--	--	na	6.1E+03	--	--	na	4.0E+00	--	--	na	6.1E+02	**--**	**--**	**na**	**6.1E+02**
Tetrachloroethylene[C]	0	--	--	na	3.3E+01	--	--	na	5.0E+03	--	--	na	3.3E+00	--	--	na	5.0E+02	**--**	**--**	**na**	**5.0E+02**
Thallium	0	--	--	na	4.7E-01	--	--	na	2.5E+01	--	--	na	4.7E-02	--	--	na	2.5E+00	**--**	**--**	**na**	**2.5E+00**
Toluene	0	--	--	na	6.0E+03	--	--	na	3.2E+05	--	--	na	6.0E+02	--	--	na	3.2E+04	**--**	**--**	**na**	**3.2E+04**
Total dissolved solids	0	--	--	na	--	--	--	na	--	--	--	na	--	--	--	na	--	**--**	**--**	**na**	**--**
Toxaphene [C]	0	7.3E-01	2.0E-04	na	2.8E-03	1.6E+00	7.8E-03	na	4.3E-01	1.8E-01	5.0E-05	na	2.8E-04	6.2E+00	1.9E-03	na	4.3E-02	**1.6E+00**	**1.9E-03**	**na**	**4.3E-02**
Tributyltin	0	4.6E-01	7.2E-02	na	--	1.0E+00	2.8E+00	na	--	1.2E-01	1.8E-02	na	--	3.9E+00	7.0E-01	na	--	**1.0E+00**	**7.0E-01**	**na**	**--**
1,2,4-Trichlorobenzene	0	--	--	na	7.0E+01	--	--	na	3.8E+03	--	--	na	7.0E+00	--	--	na	3.8E+02	**--**	**--**	**na**	**3.8E+02**
1,1,2-Trichloroethane[C]	0	--	--	na	1.6E+02	--	--	na	2.4E+04	--	--	na	1.6E+01	--	--	na	2.4E+03	**--**	**--**	**na**	**2.4E+03**
Trichloroethylene [C]	0	--	--	na	3.0E+02	--	--	na	4.6E+04	--	--	na	3.0E+01	--	--	na	4.6E+03	**--**	**--**	**na**	**4.6E+03**
2,4,6-Trichlorophenol [C]	0	--	--	na	2.4E+01	--	--	na	3.6E+03	--	--	na	2.4E+00	--	--	na	3.6E+02	**--**	**--**	**na**	**3.6E+02**
2-(2,4,5-Trichlorophenoxy) propionic acid (Silvex)	0	--	--	na	--	--	--	na	--	--	--	na	--	--	--	na	--	**--**	**--**	**na**	**--**
Vinyl Chloride[C]	0	--	--	na	2.4E+01	--	--	na	3.6E+03	--	--	na	2.4E+00	--	--	na	3.6E+02	**--**	**--**	**na**	**3.6E+02**
Zinc	0	9.7E+01	8.0E+01	na	2.6E+04	2.1E+02	3.1E+03	na	1.4E+06	2.0E+01	2.0E+01	na	2.6E+03	6.8E+02	7.8E+02	na	1.4E+05	**2.1E+02**	**7.8E+02**	**na**	**1.4E+05**

Notes:

1. All concentrations expressed as micrograms/liter (ug/l), unless noted otherwise
2. Discharge flow is highest monthly average or Form 2C maximum for Industries and design flow for Municipals
3. Metals measured as Dissolved, unless specified otherwise
4. "C" indicates a carcinogenic parameter
5. Regular WLAs are mass balances (minus background concentration) using the % of stream flow entered above under Mixing Information.
   Antidegradation WLAs are based upon a complete mix.
6. Antideg. Baseline = (0.25(WQC - background conc.) + background conc.) for acute and chronic
   = (0.1(WQC - background conc.) + background conc.) for human health
7. WLAs established at the following stream flows: 1Q10 for Acute, 30Q10 for Chronic Ammonia, 7Q10 for Other Chronic, 30Q5 for Non-carcinogens and Harmonic Mean for Carcinogens. To apply mixing ratios from a model set the stream flow equal to (mixing ratio - 1), effluent flow equal to 1 and 100% mix.

Metal	Target Value (SSTV)
Antimony	3.4E+03
Arsenic	3.0E+02
Barium	na
Cadmium	2.6E+00
Chromium III	3.0E+02
Chromium VI	1.4E+01
Copper	9.4E+00
Iron	na
Lead	4.4E+01
Manganese	na
Mercury	1.2E+00
Nickel	8.0E+01
Selenium	1.7E+01
Silver	2.0E+00
Zinc	8.4E+01

Note: do not use QL's lower than the minimum QL's provided in agency guidance

FRESHWATER
WATER QUALITY CRITERIA / WASTELOAD ALLOCATION ANALYSIS

Facility Name: BPS Outfall 002 Final Configuration Permit No.: VA0004138

Receiving Stream: James River Version: OWP Guidance Memo 00-2011 (8/24/00)

Stream Information		
Mean Hardness (as CaCO3) =	62.5	mg/L
90% Temperature (Annual) =	26.86	deg C
90% Temperature (Wet season) =		deg C
90% Maximum pH =	8.03	SU
10% Maximum pH =	7.06	SU
Tier Designation (1 or 2) =	2	
Public Water Supply (PWS) Y/N? =	N	
Trout Present Y/N? =	N	
Early Life Stages Present Y/N? =	Y	

Stream Flows		
1Q10 (Annual) =	358	MGD
7Q10 (Annual) =	406	MGD
30Q10 (Annual) =	497	MGD
1Q10 (Wet season) =		MGD
30Q10 (Wet season) =		MGD
30Q5 =	559	MGD
Harmonic Mean =	1570	MGD

Mixing Information		
Annual - 1Q10 Mix =	3.64	%
- 7Q10 Mix =	100	%
- 30Q10 Mix =	100	%
Wet Season - 1Q10 Mix =		%
- 30Q10 Mix =		%

Effluent Information		
Mean Hardness (as CaCO3) =	70.1	mg/L
90% Temp (Annual) =	28.3	deg C
90% Temp (Wet season) =		deg C
90% Maximum pH =	8.3	SU
10% Maximum pH =	7	SU
Discharge Flow =	4.2912	MGD

Parameter	Background	Water Quality Criteria				Wasteload Allocations				Antidegradation Baseline				Antidegradation Allocations				**Most Limiting Allocations**			
(ug/l unless noted)	Conc.	Acute	Chronic	HH (PWS)	HH	Acute	Chronic	HH (PWS)	HH	Acute	Chronic	HH (PWS)	HH	Acute	Chronic	HH (PWS)	HH	**Acute**	**Chronic**	**HH (PWS)**	**HH**
Acenapthene	0	--	--	na	9.9E+02	--	--	na	1.3E+05	--	--	na	9.9E+01	--	--	na	1.3E+04	**--**	**--**	**na**	**1.3E+04**
Acrolein	0	--	--	na	9.3E+00	--	--	na	1.2E+03	--	--	na	9.3E-01	--	--	na	1.2E+02	**--**	**--**	**na**	**1.2E+02**
Acrylonitrile[C]	0	--	--	na	2.5E+00	--	--	na	9.2E+02	--	--	na	2.5E-01	--	--	na	9.2E+01	**--**	**--**	**na**	**9.2E+01**
Aldrin [C]	0	3.0E+00	--	na	5.0E-04	1.2E+01	--	na	1.8E-01	7.5E-01	--	na	5.0E-05	6.3E+01	--	na	1.8E-02	**1.2E+01**	**--**	**na**	**1.8E-02**
Ammonia-N (mg/l) (Yearly)	0	7.18E+00	1.05E+00	na	--	2.90E+01	1.22E+02	na	--	1.98E+00	2.62E-01	na	--	1.67E+02	3.06E+01	na	--	**2.90E+01**	**3.06E+01**	**na**	**--**
Ammonia-N (mg/l) (High Flow)	0	4.71E+00	1.52E+00	na	--	4.71E+00	1.52E+00	na	--	1.18E+00	3.81E-01	na	--	1.18E+00	3.81E-01	na	--	**1.18E+00**	**3.81E-01**	**na**	**--**
Anthracene	0	--	--	na	4.0E+04	--	--	na	5.3E+06	--	--	na	4.0E+03	--	--	na	5.3E+05	**--**	**--**	**na**	**5.3E+05**
Antimony	0	--	--	na	6.4E+02	--	--	na	8.4E+04	--	--	na	6.4E+01	--	--	na	8.4E+03	**--**	**--**	**na**	**8.4E+03**
Arsenic	0	3.4E+02	1.5E+02	na	--	1.4E+03	1.4E+04	na	--	8.5E+01	3.8E+01	na	--	7.2E+03	3.6E+03	na	--	**1.4E+03**	**3.6E+03**	**na**	**--**
Barium	0	--	--	na	--	--	--	na	--	--	--	na	--	--	--	na	--	**--**	**--**	**na**	**--**
Benzene [C]	0	--	--	na	5.1E+02	--	--	na	1.9E+05	--	--	na	5.1E+01	--	--	na	1.9E+04	**--**	**--**	**na**	**1.9E+04**
Benzidine[C]	0	--	--	na	2.0E-03	--	--	na	7.3E-01	--	--	na	2.0E-04	--	--	na	7.3E-02	**--**	**--**	**na**	**7.3E-02**
Benzo (a) anthracene [C]	0	--	--	na	1.8E-01	--	--	na	6.6E+01	--	--	na	1.8E-02	--	--	na	6.6E+00	**--**	**--**	**na**	**6.6E+00**
Benzo (b) fluoranthene [C]	0	--	--	na	1.8E-01	--	--	na	6.6E+01	--	--	na	1.8E-02	--	--	na	6.6E+00	**--**	**--**	**na**	**6.6E+00**
Benzo (k) fluoranthene [C]	0	--	--	na	1.8E-01	--	--	na	6.6E+01	--	--	na	1.8E-02	--	--	na	6.6E+00	**--**	**--**	**na**	**6.6E+00**
Benzo (a) pyrene [C]	0	--	--	na	1.8E-01	--	--	na	6.6E+01	--	--	na	1.8E-02	--	--	na	6.6E+00	**--**	**--**	**na**	**6.6E+00**
Bis2-Chloroethyl Ether [C]	0	--	--	na	5.3E+00	--	--	na	1.9E+03	--	--	na	5.3E-01	--	--	na	1.9E+02	**--**	**--**	**na**	**1.9E+02**
Bis2-Chloroisopropyl Ether	0	--	--	na	6.5E+04	--	--	na	8.5E+06	--	--	na	6.5E+03	--	--	na	8.5E+05	**--**	**--**	**na**	**8.5E+05**
Bis 2-Ethylhexyl Phthalate [C]	0	--	--	na	2.2E+01	--	--	na	8.1E+03	--	--	na	2.2E+00	--	--	na	8.1E+02	**--**	**--**	**na**	**8.1E+02**
Bromoform [C]	0	--	--	na	1.4E+03	--	--	na	5.1E+05	--	--	na	1.4E+02	--	--	na	5.1E+04	**--**	**--**	**na**	**5.1E+04**
Butylbenzylphthalate	0	--	--	na	1.9E+03	--	--	na	2.5E+05	--	--	na	1.9E+02	--	--	na	2.5E+04	**--**	**--**	**na**	**2.5E+04**
Cadmium	0	2.4E+00	7.9E-01	na	--	9.6E+00	7.5E+01	na	--	5.8E-01	2.0E-01	na	--	4.9E+01	1.9E+01	na	--	**9.6E+00**	**1.9E+01**	**na**	**--**
Carbon Tetrachloride [C]	0	--	--	na	1.6E+01	--	--	na	5.9E+03	--	--	na	1.6E+00	--	--	na	5.9E+02	**--**	**--**	**na**	**5.9E+02**
Chlordane [C]	0	2.4E+00	4.3E-03	na	8.1E-03	9.7E+00	4.1E-01	na	3.0E+00	6.0E-01	1.1E-03	na	8.1E-04	5.1E+01	1.0E-01	na	3.0E-01	**9.7E+00**	**1.0E-01**	**na**	**3.0E-01**
Chloride	0	8.6E+05	2.3E+05	na	--	3.5E+06	2.2E+07	na	--	2.2E+05	5.8E+04	na	--	1.8E+07	5.5E+06	na	--	**3.5E+06**	**5.5E+06**	**na**	**--**
TRC	0	1.9E+01	1.1E+01	na	--	7.7E+01	1.1E+03	na	--	4.8E+00	2.8E+00	na	--	4.0E+02	2.6E+02	na	--	**7.7E+01**	**2.6E+02**	**na**	**--**
Chlorobenzene	0	--	--	na	1.6E+03	--	--	na	2.1E+05	--	--	na	1.6E+02	--	--	na	2.1E+04	**--**	**--**	**na**	**2.1E+04**

Parameter	Background	Water Quality Criteria				Wasteload Allocations				Antidegradation Baseline				Antidegradation Allocations				**Most Limiting Allocations**			
(ug/l unless noted)	Conc.	Acute	Chronic	HH (PWS)	HH	Acute	Chronic	HH (PWS)	HH	Acute	Chronic	HH (PWS)	HH	Acute	Chronic	HH (PWS)	HH	**Acute**	**Chronic**	**HH (PWS)**	**HH**
Chlorodibromomethane[C]	0	--	--	na	1.3E+02	--	--	na	4.8E+04	--	--	na	1.3E+01	--	--	na	4.8E+03	**--**	**--**	**na**	**4.8E+03**
Chloroform	0	--	--	na	1.1E+04	--	--	na	1.4E+06	--	--	na	1.1E+03	--	--	na	1.4E+05	**--**	**--**	**na**	**1.4E+05**
2-Chloronaphthalene	0	--	--	na	1.6E+03	--	--	na	2.1E+05	--	--	na	1.6E+02	--	--	na	2.1E+04	**--**	**--**	**na**	**2.1E+04**
2-Chlorophenol	0	--	--	na	1.5E+02	--	--	na	2.0E+04	--	--	na	1.5E+01	--	--	na	2.0E+03	**--**	**--**	**na**	**2.0E+03**
Chlorpyrifos	0	8.3E-02	4.1E-02	na	--	3.4E-01	3.9E+00	na	--	2.1E-02	1.0E-02	na	--	1.8E+00	9.8E-01	na	--	**3.4E-01**	**9.8E-01**	**na**	**--**
Chromium III	0	4.0E+02	5.0E+01	na	--	1.6E+03	4.8E+03	na	--	9.7E+01	1.3E+01	na	--	8.2E+03	1.2E+03	na	--	**1.6E+03**	**1.2E+03**	**na**	**--**
Chromium VI	0	1.6E+01	1.1E+01	na	--	6.5E+01	1.1E+03	na	--	4.0E+00	2.8E+00	na	--	3.4E+02	2.6E+02	na	--	**6.5E+01**	**2.6E+02**	**na**	**--**
Chromium, Total	0	--	--	1.0E+02	--	--	--	na	--	--	--	1.0E+01	--	--	--	1.3E+03	--	**--**	**--**	**na**	**--**
Chrysene [C]	0	--	--	na	1.8E-02	--	--	na	6.6E+00	--	--	na	1.8E-03	--	--	na	6.6E-01	**--**	**--**	**na**	**6.6E-01**
Copper	0	8.9E+00	6.0E+00	na	--	3.6E+01	5.7E+02	na	--	2.2E+00	1.5E+00	na	--	1.8E+02	1.4E+02	na	--	**3.6E+01**	**1.4E+02**	**na**	**--**
Cyanide, Free	0	2.2E+01	5.2E+00	na	1.6E+04	8.9E+01	5.0E+02	na	2.1E+06	5.5E+00	1.3E+00	na	1.6E+03	4.6E+02	1.2E+02	na	2.1E+05	**8.9E+01**	**1.2E+02**	**na**	**2.1E+05**
DDD [C]	0	--	--	na	3.1E-03	--	--	na	1.1E+00	--	--	na	3.1E-04	--	--	na	1.1E-01	**--**	**--**	**na**	**1.1E-01**
DDE [C]	0	--	--	na	2.2E-03	--	--	na	8.1E-01	--	--	na	2.2E-04	--	--	na	8.1E-02	**--**	**--**	**na**	**8.1E-02**
DDT [C]	0	1.1E+00	1.0E-03	na	2.2E-03	4.4E+00	9.6E-02	na	8.1E-01	2.8E-01	2.5E-04	na	2.2E-04	2.3E+01	2.4E-02	na	8.1E-02	**4.4E+00**	**2.4E-02**	**na**	**8.1E-02**
Demeton	0	--	1.0E-01	na	--	--	9.6E+00	na	--	--	2.5E-02	na	--	--	2.4E+00	na	--	**--**	**2.4E+00**	**na**	**--**
Diazinon	0	1.7E-01	1.7E-01	na	--	6.9E-01	1.6E+01	na	--	4.3E-02	4.3E-02	na	--	3.6E+00	4.1E+00	na	--	**6.9E-01**	**4.1E+00**	**na**	**--**
Dibenz(a,h)anthracene [C]	0	--	--	na	1.8E-01	--	--	na	6.6E+01	--	--	na	1.8E-02	--	--	na	6.6E+00	**--**	**--**	**na**	**6.6E+00**
1,2-Dichlorobenzene	0	--	--	na	1.3E+03	--	--	na	1.7E+05	--	--	na	1.3E+02	--	--	na	1.7E+04	**--**	**--**	**na**	**1.7E+04**
1,3-Dichlorobenzene	0	--	--	na	9.6E+02	--	--	na	1.3E+05	--	--	na	9.6E+01	--	--	na	1.3E+04	**--**	**--**	**na**	**1.3E+04**
1,4-Dichlorobenzene	0	--	--	na	1.9E+02	--	--	na	2.5E+04	--	--	na	1.9E+01	--	--	na	2.5E+03	**--**	**--**	**na**	**2.5E+03**
3,3-Dichlorobenzidine[C]	0	--	--	na	2.8E-01	--	--	na	1.0E+02	--	--	na	2.8E-02	--	--	na	1.0E+01	**--**	**--**	**na**	**1.0E+01**
Dichlorobromomethane [C]	0	--	--	na	1.7E+02	--	--	na	6.2E+04	--	--	na	1.7E+01	--	--	na	6.2E+03	**--**	**--**	**na**	**6.2E+03**
1,2-Dichloroethane [C]	0	--	--	na	3.7E+02	--	--	na	1.4E+05	--	--	na	3.7E+01	--	--	na	1.4E+04	**--**	**--**	**na**	**1.4E+04**
1,1-Dichloroethylene	0	--	--	na	7.1E+03	--	--	na	9.3E+05	--	--	na	7.1E+02	--	--	na	9.3E+04	**--**	**--**	**na**	**9.3E+04**
1,2-trans-dichloroethylene	0	--	--	na	1.0E+04	--	--	na	1.3E+06	--	--	na	1.0E+03	--	--	na	1.3E+05	**--**	**--**	**na**	**1.3E+05**
2,4-Dichlorophenol	0	--	--	na	2.9E+02	--	--	na	3.8E+04	--	--	na	2.9E+01	--	--	na	3.8E+03	**--**	**--**	**na**	**3.8E+03**
2,4-Dichlorophenoxy acetic acid (2,4-D)	0	--	--	na	--	--	--	na	--	--	--	na	--	--	--	na	--	**--**	**--**	**na**	**--**
1,2-Dichloropropane[C]	0	--	--	na	1.5E+02	--	--	na	5.5E+04	--	--	na	1.5E+01	--	--	na	5.5E+03	**--**	**--**	**na**	**5.5E+03**
1,3-Dichloropropene [C]	0	--	--	na	2.1E+02	--	--	na	7.7E+04	--	--	na	2.1E+01	--	--	na	7.7E+03	**--**	**--**	**na**	**7.7E+03**
Dieldrin [C]	0	2.4E-01	5.6E-02	na	5.4E-04	9.7E-01	5.4E+00	na	2.0E-01	6.0E-02	1.4E-02	na	5.4E-05	5.1E+00	1.3E+00	na	2.0E-02	**9.7E-01**	**1.3E+00**	**na**	**2.0E-02**
Diethyl Phthalate	0	--	--	na	4.4E+04	--	--	na	5.8E+06	--	--	na	4.4E+03	--	--	na	5.8E+05	**--**	**--**	**na**	**5.8E+05**
2,4-Dimethylphenol	0	--	--	na	8.5E+02	--	--	na	1.1E+05	--	--	na	8.5E+01	--	--	na	1.1E+04	**--**	**--**	**na**	**1.1E+04**
Dimethyl Phthalate	0	--	--	na	1.1E+06	--	--	na	1.4E+08	--	--	na	1.1E+05	--	--	na	1.4E+07	**--**	**--**	**na**	**1.4E+07**
Di-n-Butyl Phthalate	0	--	--	na	4.5E+03	--	--	na	5.9E+05	--	--	na	4.5E+02	--	--	na	5.9E+04	**--**	**--**	**na**	**5.9E+04**
2,4 Dinitrophenol	0	--	--	na	5.3E+03	--	--	na	7.0E+05	--	--	na	5.3E+02	--	--	na	7.0E+04	**--**	**--**	**na**	**7.0E+04**
2-Methyl-4,6-Dinitrophenol	0	--	--	na	2.8E+02	--	--	na	3.7E+04	--	--	na	2.8E+01	--	--	na	3.7E+03	**--**	**--**	**na**	**3.7E+03**
2,4-Dinitrotoluene [C]	0	--	--	na	3.4E+01	--	--	na	1.2E+04	--	--	na	3.4E+00	--	--	na	1.2E+03	**--**	**--**	**na**	**1.2E+03**
Dioxin 2,3,7,8-tetrachlorodibenzo-p-dioxin	0	--	--	na	5.1E-08	--	--	na	6.7E-06	--	--	na	5.1E-09	--	--	na	6.7E-07	**--**	**--**	**na**	**6.7E-07**
1,2-Diphenylhydrazine[C]	0	--	--	na	2.0E+00	--	--	na	7.3E+02	--	--	na	2.0E-01	--	--	na	7.3E+01	**--**	**--**	**na**	**7.3E+01**
Alpha-Endosulfan	0	2.2E-01	5.6E-02	na	8.9E+01	8.9E-01	5.4E+00	na	1.2E+04	5.5E-02	1.4E-02	na	8.9E+00	4.6E+00	1.3E+00	na	1.2E+03	**8.9E-01**	**1.3E+00**	**na**	**1.2E+03**
Beta-Endosulfan	0	2.2E-01	5.6E-02	na	8.9E+01	8.9E-01	5.4E+00	na	1.2E+04	5.5E-02	1.4E-02	na	8.9E+00	4.6E+00	1.3E+00	na	1.2E+03	**8.9E-01**	**1.3E+00**	**na**	**1.2E+03**
Alpha + Beta Endosulfan	0	2.2E-01	5.6E-02	--	--	8.9E-01	5.4E+00	--	--	5.5E-02	1.4E-02	--	--	4.6E+00	1.3E+00	--	--	**8.9E-01**	**1.3E+00**	**--**	**--**
Endosulfan Sulfate	0	--	--	na	8.9E+01	--	--	na	1.2E+04	--	--	na	8.9E+00	--	--	na	1.2E+03	**--**	**--**	**na**	**1.2E+03**
Endrin	0	8.6E-02	3.6E-02	na	6.0E-02	3.5E-01	3.4E+00	na	7.9E+00	2.2E-02	9.0E-03	na	6.0E-03	1.8E+00	8.6E-01	na	7.9E-01	**3.5E-01**	**8.6E-01**	**na**	**7.9E-01**
Endrin Aldehyde	0	--	--	na	3.0E-01	--	--	na	3.9E+01	--	--	na	3.0E-02	--	--	na	3.9E+00	**--**	**--**	**na**	**3.9E+00**

Parameter	Background	Water Quality Criteria				Wasteload Allocations				Antidegradation Baseline				Antidegradation Allocations				**Most Limiting Allocations**			
(ug/l unless noted)	Conc.	Acute	Chronic	HH (PWS)	HH	Acute	Chronic	HH (PWS)	HH	Acute	Chronic	HH (PWS)	HH	Acute	Chronic	HH (PWS)	HH	**Acute**	**Chronic**	**HH (PWS)**	**HH**
Ethylbenzene	0	--	--	na	2.1E+03	--	--	na	2.8E+05	--	--	na	2.1E+02	--	--	na	2.8E+04	**--**	**--**	**na**	**2.8E+04**
Fluoranthene	0	--	--	na	1.4E+02	--	--	na	1.8E+04	--	--	na	1.4E+01	--	--	na	1.8E+03	**--**	**--**	**na**	**1.8E+03**
Fluorene	0	--	--	na	5.3E+03	--	--	na	7.0E+05	--	--	na	5.3E+02	--	--	na	7.0E+04	**--**	**--**	**na**	**7.0E+04**
Foaming Agents	0	--	--	na	--	--	--	na	--	--	--	na	--	--	--	na	--	**--**	**--**	**na**	**--**
Guthion	0	--	1.0E-02	na	--	--	9.6E-01	na	--	--	2.5E-03	na	--	--	2.4E-01	na	--	**--**	**2.4E-01**	**na**	**--**
Heptachlor [C]	0	5.2E-01	3.8E-03	na	7.9E-04	2.1E+00	3.6E-01	na	2.9E-01	1.3E-01	9.5E-04	na	7.9E-05	1.1E+01	9.1E-02	na	2.9E-02	**2.1E+00**	**9.1E-02**	**na**	**2.9E-02**
Heptachlor Epoxide[C]	0	5.2E-01	3.8E-03	na	3.9E-04	2.1E+00	3.6E-01	na	1.4E-01	1.3E-01	9.5E-04	na	3.9E-05	1.1E+01	9.1E-02	na	1.4E-02	**2.1E+00**	**9.1E-02**	**na**	**1.4E-02**
Hexachlorobenzene[C]	0	--	--	na	2.9E-03	--	--	na	1.1E+00	--	--	na	2.9E-04	--	--	na	1.1E-01	**--**	**--**	**na**	**1.1E-01**
Hexachlorobutadiene[C]	0	--	--	na	1.8E+02	--	--	na	6.6E+04	--	--	na	1.8E+01	--	--	na	6.6E+03	**--**	**--**	**na**	**6.6E+03**
Hexachlorocyclohexane Alpha-BHC[C]	0	--	--	na	4.9E-02	--	--	na	1.8E+01	--	--	na	4.9E-03	--	--	na	1.8E+00	**--**	**--**	**na**	**1.8E+00**
Hexachlorocyclohexane Beta-BHC[C]	0	--	--	na	1.7E-01	--	--	na	6.2E+01	--	--	na	1.7E-02	--	--	na	6.2E+00	**--**	**--**	**na**	**6.2E+00**
Hexachlorocyclohexane Gamma-BHC[C] (Lindane)	0	9.5E-01	na	na	1.8E+00	3.8E+00	--	na	6.6E+02	2.4E-01	--	na	1.8E-01	2.0E+01	--	na	6.6E+01	**3.8E+00**	**--**	**na**	**6.6E+01**
Hexachlorocyclopentadiene	0	--	--	na	1.1E+03	--	--	na	1.4E+05	--	--	na	1.1E+02	--	--	na	1.4E+04	**--**	**--**	**na**	**1.4E+04**
Hexachloroethane[C]	0	--	--	na	3.3E+01	--	--	na	1.2E+04	--	--	na	3.3E+00	--	--	na	1.2E+03	**--**	**--**	**na**	**1.2E+03**
Hydrogen Sulfide	0	--	2.0E+00	na	--	--	1.9E+02	na	--	--	5.0E-01	na	--	--	4.8E+01	na	--	**--**	**4.8E+01**	**na**	**--**
Indeno (1,2,3-cd) pyrene [C]	0	--	--	na	1.8E-01	--	--	na	6.6E+01	--	--	na	1.8E-02	--	--	na	6.6E+00	**--**	**--**	**na**	**6.6E+00**
Iron	0	--	--	na	--	--	--	na	--	--	--	na	--	--	--	na	--	**--**	**--**	**na**	**--**
Isophorone[C]	0	--	--	na	9.6E+03	--	--	na	3.5E+06	--	--	na	9.6E+02	--	--	na	3.5E+05	**--**	**--**	**na**	**3.5E+05**
Kepone	0	--	0.0E+00	na	--	--	0.0E+00	na	--	--	0.0E+00	na	--	--	0.0E+00	na	--	**--**	**0.0E+00**	**na**	**--**
Lead	0	6.8E+01	7.4E+00	na	--	2.7E+02	7.1E+02	na	--	1.6E+01	1.9E+00	na	--	1.4E+03	1.8E+02	na	--	**2.7E+02**	**1.8E+02**	**na**	**--**
Malathion	0	--	1.0E-01	na	--	--	9.6E+00	na	--	--	2.5E-02	na	--	--	2.4E+00	na	--	**--**	**2.4E+00**	**na**	**--**
Manganese	0	--	--	na	--	--	--	na	--	--	--	na	--	--	--	na	--	**--**	**--**	**na**	**--**
Mercury	0	1.4E+00	7.7E-01	- -	- -	5.7E+00	7.4E+01	- -	- -	3.5E-01	1.9E-01	- -	--	3.0E+01	1.8E+01	- -	--	**5.7E+00**	**1.8E+01**	**- -**	**- -**
Methyl Bromide	0	--	--	na	1.5E+03	--	--	na	2.0E+05	--	--	na	1.5E+02	--	--	na	2.0E+04	**--**	**--**	**na**	**2.0E+04**
Methylene Chloride [C]	0	--	--	na	5.9E+03	--	--	na	2.2E+06	--	--	na	5.9E+02	--	--	na	2.2E+05	**--**	**--**	**na**	**2.2E+05**
Methoxychlor	0	--	3.0E-02	na	--	--	2.9E+00	na	--	--	7.5E-03	na	--	--	7.2E-01	na	--	**--**	**7.2E-01**	**na**	**--**
Mirex	0	--	0.0E+00	na	--	--	0.0E+00	na	--	--	0.0E+00	na	--	--	0.0E+00	na	--	**--**	**0.0E+00**	**na**	**--**
Nickel	0	1.3E+02	1.4E+01	na	4.6E+03	5.1E+02	1.3E+03	na	6.0E+05	3.1E+01	3.4E+00	na	4.6E+02	2.6E+03	3.3E+02	na	6.0E+04	**5.1E+02**	**3.3E+02**	**na**	**6.0E+04**
Nitrate (as N)	0	--	--	na	--	--	--	na	--	--	--	na	--	--	--	na	--	**--**	**--**	**na**	**--**
Nitrobenzene	0	--	--	na	6.9E+02	--	--	na	9.1E+04	--	--	na	6.9E+01	--	--	na	9.1E+03	**--**	**--**	**na**	**9.1E+03**
N-Nitrosodimethylamine[C]	0	--	--	na	3.0E+01	--	--	na	1.1E+04	--	--	na	3.0E+00	--	--	na	1.1E+03	**--**	**--**	**na**	**1.1E+03**
N-Nitrosodiphenylamine[C]	0	--	--	na	6.0E+01	--	--	na	2.2E+04	--	--	na	6.0E+00	--	--	na	2.2E+03	**--**	**--**	**na**	**2.2E+03**
N-Nitrosodi-n-propylamine[C]	0	--	--	na	5.1E+00	--	--	na	1.9E+03	--	--	na	5.1E-01	--	--	na	1.9E+02	**--**	**--**	**na**	**1.9E+02**
Nonylphenol	0	2.8E+01	6.6E+00	--	--	1.1E+02	6.3E+02	na	--	7.0E+00	1.7E+00	--	--	5.9E+02	1.6E+02	--	--	**1.1E+02**	**1.6E+02**	**na**	**--**
Parathion	0	6.5E-02	1.3E-02	na	--	2.6E-01	1.2E+00	na	--	1.6E-02	3.3E-03	na	--	1.4E+00	3.1E-01	na	--	**2.6E-01**	**3.1E-01**	**na**	**--**
PCB Total[C]	0	--	1.4E-02	na	6.4E-04	--	1.3E+00	na	2.3E-01	--	3.5E-03	na	6.4E-05	--	3.3E-01	na	2.3E-02	**--**	**3.3E-01**	**na**	**2.3E-02**
Pentachlorophenol [C]	0	9.1E+00	7.1E+00	na	3.0E+01	3.7E+01	6.8E+02	na	1.1E+04	2.3E+00	1.8E+00	na	3.0E+00	2.0E+02	1.7E+02	na	1.1E+03	**3.7E+01**	**1.7E+02**	**na**	**1.1E+03**
Phenol	0	--	--	na	8.6E+05	--	--	na	1.1E+08	--	--	na	8.6E+04	--	--	na	1.1E+07	**--**	**--**	**na**	**1.1E+07**
Pyrene	0	--	--	na	4.0E+03	--	--	na	5.3E+05	--	--	na	4.0E+02	--	--	na	5.3E+04	**--**	**--**	**na**	**5.3E+04**
Radionuclides	0	--	--	na	--	--	--	na	--	--	--	na	--	--	--	na	--	**--**	**--**	**na**	**--**
Gross Alpha Activity (pCi/L)	0	--	--	na	--	--	--	na	--	--	--	na	--	--	--	na	--	**--**	**--**	**na**	**--**
Beta and Photon Activity (mrem/yr)	0	--	--	na	--	--	--	na	--	--	--	na	--	--	--	na	--	**--**	**--**	**na**	**--**
Radium 226 + 228 (pCi/L)	0	--	--	na	--	--	--	na	--	--	--	na	--	--	--	na	--	**--**	**--**	**na**	**--**
Uranium (ug/l)	0	--	--	na	--	--	--	na	--	--	--	na	--	--	--	na	--	**--**	**--**	**na**	**--**

Parameter	Background	Water Quality Criteria				Wasteload Allocations				Antidegradation Baseline				Antidegradation Allocations				**Most Limiting Allocations**			
(ug/l unless noted)	Conc.	Acute	Chronic	HH (PWS)	HH	Acute	Chronic	HH (PWS)	HH	Acute	Chronic	HH (PWS)	HH	Acute	Chronic	HH (PWS)	HH	**Acute**	**Chronic**	**HH (PWS)**	**HH**
Selenium, Total Recoverable	0	2.0E+01	5.0E+00	na	4.2E+03	8.1E+01	4.8E+02	na	5.5E+05	5.0E+00	1.3E+00	na	4.2E+02	4.2E+02	1.2E+02	na	5.5E+04	**8.1E+01**	**1.2E+02**	**na**	**5.5E+04**
Silver	0	1.6E+00	--	na	--	6.5E+00	--	na	--	3.9E-01	--	na	--	3.3E+01	--	na	--	**6.5E+00**	**--**	**na**	**--**
Sulfate	0	--	--	na	--	--	--	na	--	--	--	na	--	--	--	na	--	**--**	**--**	**na**	**--**
1,1,2,2-Tetrachloroethane[C]	0	--	--	na	4.0E+01	--	--	na	1.5E+04	--	--	na	4.0E+00	--	--	na	1.5E+03	**--**	**--**	**na**	**1.5E+03**
Tetrachloroethylene[C]	0	--	--	na	3.3E+01	--	--	na	1.2E+04	--	--	na	3.3E+00	--	--	na	1.2E+03	**--**	**--**	**na**	**1.2E+03**
Thallium	0	--	--	na	4.7E-01	--	--	na	6.2E+01	--	--	na	4.7E-02	--	--	na	6.2E+00	**--**	**--**	**na**	**6.2E+00**
Toluene	0	--	--	na	6.0E+03	--	--	na	7.9E+05	--	--	na	6.0E+02	--	--	na	7.9E+04	**--**	**--**	**na**	**7.9E+04**
Total dissolved solids	0	--	--	na	--	--	--	na	--	--	--	na	--	--	--	na	--	**--**	**--**	**na**	**--**
Toxaphene [C]	0	7.3E-01	2.0E-04	na	2.8E-03	2.9E+00	1.9E-02	na	1.0E+00	1.8E-01	5.0E-05	na	2.8E-04	1.5E+01	4.8E-03	na	1.0E-01	**2.9E+00**	**4.8E-03**	**na**	**1.0E-01**
Tributyltin	0	4.6E-01	7.2E-02	na	--	1.9E+00	6.9E+00	na	--	1.2E-01	1.8E-02	na	--	9.7E+00	1.7E+00	na	--	**1.9E+00**	**1.7E+00**	**na**	**--**
1,2,4-Trichlorobenzene	0	--	--	na	7.0E+01	--	--	na	9.2E+03	--	--	na	7.0E+00	--	--	na	9.2E+02	**--**	**--**	**na**	**9.2E+02**
1,1,2-Trichloroethane[C]	0	--	--	na	1.6E+02	--	--	na	5.9E+04	--	--	na	1.6E+01	--	--	na	5.9E+03	**--**	**--**	**na**	**5.9E+03**
Trichloroethylene [C]	0	--	--	na	3.0E+02	--	--	na	1.1E+05	--	--	na	3.0E+01	--	--	na	1.1E+04	**--**	**--**	**na**	**1.1E+04**
2,4,6-Trichlorophenol [C]	0	--	--	na	2.4E+01	--	--	na	8.8E+03	--	--	na	2.4E+00	--	--	na	8.8E+02	**--**	**--**	**na**	**8.8E+02**
2-(2,4,5-Trichlorophenoxy) propionic acid (Silvex)	0	--	--	na	--	--	--	na	--	--	--	na	--	--	--	na	--	**--**	**--**	**na**	**--**
Vinyl Chloride[C]	0	--	--	na	2.4E+01	--	--	na	8.8E+03	--	--	na	2.4E+00	--	--	na	8.8E+02	**--**	**--**	**na**	**8.8E+02**
Zinc	0	8.1E+01	7.9E+01	na	2.6E+04	3.3E+02	7.6E+03	na	3.4E+06	2.0E+01	2.0E+01	na	2.6E+03	1.7E+03	1.9E+03	na	3.4E+05	**3.3E+02**	**1.9E+03**	**na**	**3.4E+05**

Notes:

1. All concentrations expressed as micrograms/liter (ug/l), unless noted otherwise
2. Discharge flow is highest monthly average or Form 2C maximum for Industries and design flow for Municipals
3. Metals measured as Dissolved, unless specified otherwise
4. "C" indicates a carcinogenic parameter
5. Regular WLAs are mass balances (minus background concentration) using the % of stream flow entered above under Mixing Information.
   Antidegradation WLAs are based upon a complete mix.
6. Antideg. Baseline = (0.25(WQC - background conc.) + background conc.) for acute and chronic
   = (0.1(WQC - background conc.) + background conc.) for human health
7. WLAs established at the following stream flows: 1Q10 for Acute, 30Q10 for Chronic Ammonia, 7Q10 for Other Chronic, 30Q5 for Non-carcinogens and Harmonic Mean for Carcinogens. To apply mixing ratios from a model set the stream flow equal to (mixing ratio - 1), effluent flow equal to 1 and 100% mix.

Metal	Target Value (SSTV)
Antimony	8.4E+03
Arsenic	5.5E+02
Barium	na
Cadmium	3.9E+00
Chromium III	6.4E+02
Chromium VI	2.6E+01
Copper	1.4E+01
Iron	na
Lead	1.1E+02
Manganese	na
Mercury	2.3E+00
Nickel	2.0E+02
Selenium	3.2E+01
Silver	2.6E+00
Zinc	1.3E+02

Note: do not use QL's lower than the minimum QL's provided in agency guidance

APPENDIX H

THERMAL MIXING ZONE EVALUATION AND EFFLUENT LIMITATIONS FOR HEAT REJECTED

There are two thermal mixing zones in the vicinity of BPS:

- Thermal Mixing Zone – Dominion-Bear Garden Power Station: The Dominion Bear Garden Power Station is located directly across the James River from BPS. The Bear Garden Power Station has cooling towers so its thermal mixing zone is much smaller than the thermal mixing zone for BPS. The location of Outfall 001 for the Bear Garden Power Station is shown on page 3 of Appendix B. The Bear Garden Power Station has a Thermal Mixing Zone which is 100 feet long and 20 feet wide. The Bear Garden Thermal Mixing Zone does not affect the BPS Thermal Mixing Zone.

- Thermal Mixing Zone – BPS: BPS does not have cooling towers. The Thermal Mixing Zone was first designated in 1977. The approved Thermal Mixing Zone is defined as "40% of the width of the James River, as measured from the north bank extending from the John H. Cocke Memorial Bridge downstream to Spicer's Island, approximately 5 ½ miles downstream of the cooling water discharge (Outfall 001)."

Annual Thermal Mixing Zone Study:
The applicant has conducted a stream monitoring program in July of each year since the 1970s. These studies are conducted during the time of year when the river is warmest and critical flow conditions are more likely to be occurring. That program has been adequate to describe the maximum stream temperature below the plant; the increase in stream temperature from the natural condition; the zone of clear passage (where there is no temperature change) and the length of the mixing zone required to bring the river back to its normal temperature. Compliance is demonstrated using instream temperature monitoring performed during the month of July and at a time when the plant is as near full operating capacity as reasonably possible, the river is warmest, and critical flow conditions are more likely to be occurring. The purpose of the annual thermal mixing zone study is to demonstrate that the effluent limitations for heat rejection are adequate for maintaining numeric WQC for temperature outside of the approved Thermal Mixing Zone. Thermal mixing zone studies performed annually by the applicant and conducted in accordance with the approved monitoring plan were reviewed. River water temperatures outside of the mixing zone were not greater than 3° C above ambient conditions in studies performed during the term of the previous permit. The review of all the thermal discharge and surface water monitoring data indicates that, on occasion, the maximum discharge temperatures do result in use of the full extent of the allowable Thermal Mixing Zone. For that reason the evaluation concluded that the existing mixing zone should not be changed.

The permit requires that a thermal mixing zone survey be conducted twice per year rather than once per year. The second survey is to be conducted during January or February each year to capture any seasonal variation. The permit requires that within 60 days of the effective date of the permit, a revised Thermal Mixing Zone Monitoring Plan be submitted for DEQ approval.

Heat Rejection Limit:
Heat Rejection is defined as the rate of heat transfer from a unit's condenser to its circulating water system. It is calculated directly by conservation of mass and energy either across the circulating water system (condenser tube side) or from the turbine exhaust to the hotwell (condenser shell side). Heat Rejection is measured in BTU/Hour.

On December 21, 1978, VPDES Permit No. VA0004138 was modified to include the Board approved thermal mixing zone. The modified permit also required continuous monitoring for Outfall 001 (once-through condenser cooling water) temperature and specified that the maximum heat rejection to the waterway shall not exceed a maximum of 1.62 X 10^9 BTU/Hour. The heat rejection limit was considered to be protective of the instream standards for temperature outside the approved thermal mixing zone and has been carried forward since that time. No change to the heat rejection limit is proposed with this reissuance. The permit requires monitoring for intake temperature and effluent temperature at Outfall 001 for future evaluation purposes.

Dominion used available information from recent tests to develop heat rejection estimates for Units 3 and 4. Below is a discussion of the estimates provided by Dominion on October 20, 2015.

> Dominion periodically performs capacity tests of Unit 3 and Unit 4 that are used to substantiate market dispatch of both units. These capacity tests are performed during environmental and operational conditions approaching maximum. Using the data from a capacity test of the units performed this past summer our engineering team determined that the heat rejected by Unit 3 was 471.66 X 10^6 BTU/HR on June 24, 2015 and the heat rejected by Unit 4 was 840.95 X 10^6 Btu/Hr on June 23, 2015. The total heat rejection for both units, based on these specific tests, equates to 1.313 X 10^9 BTU/HR, which is within 20% of our current heat rejection limit.
>
> The above calculated condenser heat rejection values are based on modeling the units in "heat balance" software, called F-Cycle. F-Cycle is a heat balance modeling tool that takes test data and balances the mass flows, energy and temperatures across the unit. F-Cycle and similar software programs are used by the energy industry to evaluate and analyze the performance of various units in their systems.
>
> The results of these capacity tests provide an indication of the heat rejection for the particular operational period during which the tests were performed. However, heat rejection by the units can vary considerably due to many factors, including at least the following:
> 1. Condenser Air In-Leakage
> 2. Low River Levels – Reducing Circulating Water Pump Flows to the Condensers
> 3. High River Water Temperatures
> 4. Equipment out of service, e.g., 1st Pt FWH, etc.
> 5. Condenser Tube Side Cleanliness

APPENDIX I

COOLING WATER INTAKE STRUCTURE 316(b) EVALUATION

Section 316(b) of the Clean Water Act requires the location, design, construction, and capacity of cooling water intake structures (CWIS) reflect the best technology available (BTA) for minimizing adverse environmental impacts. The cooling water intake requirements are included in the federal NPDES Permit Regulations, 40 CFR §§122 & 125 (Subparts I, J, & N). EPA's final "Phase II" rule addressing existing facilities was promulgated on August 15, 2014, and became effective on October 14, 2014.

40 CFR §125.92 includes the following definitions:
Cooling Water – '…water used for contact or non-contact cooling, including water used for equipment cooling, including water used for equipment cooling, evaporative cooling tower makeup, and dilution of effluent heat content. The intended use of the cooling water is to absorb waste heat rejected from the process or processes used…"

Cooling Water Intake Structure – "…the total physical structure and any associated constructed waterways used to withdraw cooling water from surface waters. The cooling water intake structure extends from the point at which water is first withdrawn…up to, and including the intake pumps."

Existing Facility – "…any facility that commenced construction… on or before January 17, 2002…"

BPS is subject to the requirements of 40CFR §125. 94 through 40CFR §125.99 of the 316(b) rule because:

- BPS is an existing facility;
- The facility is a point source discharger subject to a VPDES permit;
- The facility uses cooling water obtained from one or more cooling water intake structures;
- The facility's cumulative design intake flow (DIF) is greater than 2 MGD;
- Water is withdrawn from waters of the U.S.; and
- At least 25% of the actual intake flow (AIF) is used exclusively for cooling purposes.

Existing facilities with DIF > 2 MGD are subject to applicable provisions of the following permit application information submittal requirements.

40 CFR 122.21 Section	Study Name	Study Contents (to include, but not limited to)
(r)(2)	Source water physical data	Water body description (dimensions, depths, salinity, temperatures, hydrological & geomorphological features); methods used to determine the intake's area of influence within the waterbody.
(r)(3)	Cooling water intake structure data	Engineering drawings, location (lat/long), configuration within the waterbody and water column, flow distribution and water balance diagram, description of operations (withdrawal flows, daily hours, number of days)
(r)(4)	Source water baseline biological characterization data	Species/life stages present & their abundance, susceptibility to impingement mortality and entrainment (IM&E), spawning periods, seasonal and daily patterns, T&E species documentation
(r)(5)	Cooling water system data	Configuration/operation of the cooling system (number of days, seasonal changes, etc.), flows allocated for cooling vs. process waters; existing reuse, flow reduction, & IM&E measures
(r)(6)	Chosen method(s) of compliance with the Impingement Mortality standard	The selected impingement mortality compliance path, option-specific info (e.g. monitoring plan for BTA, documentation of velocities); Performance Optimization Study
(r)(7)	Existing entrainment performance studies	Previous studies on technology efficacy and costs, studies conducted at other facilities/locations
(r)(8)	Operational status	Age, capacity utilization, past & planned upgrades

There are additional permit application requirements for all existing facilities whose AIFs are greater than 125 MGD; however, the additional permit application requirement do not apply in this situation because the AIF at BPS is less than 125 MGD.

ALTERNATE SCHEDULE FOR SUBMITTAL OF 40 CFR §122.21(r) INFORMATION:
VPDES Permit Regulation 9VAC25-31-165.C requires existing facilities with cooling water intake structures to meet the requirements under §316(b) of the Clean Water Act (CWA) determined by the department on a case-by-case, best professional judgment (BPJ) basis. Federal regulations at 40 CFR §125.95(a)(2) allow for owners or operators of a facility whose permit expires prior to July 14, 2018 to request the Director establish an alternate schedule for the submission of the information required in 40 CFR §122.21(r) when making application for this permit. If the owner or operator of the facility demonstrates that it could not develop the required information by the applicable date of submission, DEQ must establish an alternate schedule for the submission of the required information.

Dominion has requested an alternate schedule be established for BPS. Language from Dominion's January 2015 permit application regarding the alternate schedule is included below:

> On October 14, 2014, the Environmental Protection Agency finalized regulations (the Rule) for cooling water intake structures at existing facilities pursuant to Section 316(b) of the Clean Water Act. Bremo Power Station is subject to the Rule as an existing facility with a Design Intake Flow greater than 2 MGD. Section 40 CFR 122.21(r) of the Rule establishes the application information required to support entrainment and impingement technology decisions. Section 40 CFR 125.95(a)(2) of the rule allows permittees to request an alternative schedule for submittal of the 316(b) permit application requirements for permits that expire before July 14, 2018. Additionally, for a permit issued before July 14, 2018, Section 40 CFR 125.98(b)(5) of the Rule allows the permitting authority to include permit conditions to ensure that the permittee provide all application information required for the Rule for the subsequent permit.
>
> We have conducted a review of the Rule requirements as they apply to the Bremo Power Station. Based on that review, we will be required to provide the information specified in Section 40 CFR 122.21(r)(2) through (8.). The Actual Intake Flow (AIF) at the Station is approximately 82 MGD based on the three years 2011 through 2013. Because the AIF is less than 125 MGD, the information specified in Section 40 CFR 122.21(r)(9) through (13) is not required. The information items required include:
>
> - r(2): Source Water Physical Data
> - r(3): Cooling Water Intake Structure Data
> - r(4): Source water baseline biological characterization data
> - r(5): Cooling Water System Data
> - r(6): Chosen Method(s) of Compliance with Impingement Mortality Standard
> - r(7): Entrainment Performance Studies
> - r(8): Operational Status
>
> Given that the rule became effective in October 2014, the required information could not be developed in time for application submittal. The information identified above includes numerous time-consuming efforts including:
>
> - Collecting and summarizing information on the intake structure and cooling water system;
> - Determination of the area of influence of the intake structure;
> - Collecting and summarizing information for the baseline biological characterization;
> - Conducting additional field studies for evaluation of impingement technologies, we are planning to conduct one year of impingement monitoring to inform that decision;
> - Conducting extensive engineering evaluations of candidate technologies to identify the proposed impingement compliance method and the specific compliance technology compatible with existing operations.
>
> Accordingly, we request an alternative schedule in our reissued permit to specify that all applicable information in Section 40 CFR 122.21(r) be submitted with the subsequent permit reissuance application.

Upon review of the request, DEQ staff determined the permittee successfully demonstrated the inability to reasonably develop the required information by their reissuance application due date, thereby qualifying for an alternate schedule to be established.

Federal regulations at 40 CFR §125.98(a) requires the review, for completeness, of the materials submitted by the applicant under 40 CFR §122.21(r) at the time of any application for a subsequent permit. To facilitate a determination of a timely and complete reissuance application in compliance with Part II.M of this permit, the Alternate Schedule for this facility has been established to require submission of the 40 CFR §122.21(r) information to the DEQ-Regional Office by no later than 270 days prior to the expiration date of this permit.

40CFR §125.98(b)(5) establishes that permits issued after October 14, 2014 and before July 14, 2018 and where alternate schedules for information submittal have been established:

- May include permit conditions to ensure that, for any subsequent permit, all the information required by 40 CFR 122.21(r) necessary to establish impingement mortality and entrainment BTA will be available to the Director; and
- Must establish interim Best Technology Available (BTA) requirements in the permit based on best professional judgment and a site-specific basis.

BPS has two CWISs. Dominion reports their water withdrawals each year to the DEQ-Office of Water Supply in accordance with the Water Withdrawal Reporting Regulation (9VAC25-200). The following table is a summary of the cumulative calendar year water withdrawals through the two CWIS, based on data reported to DEQ from 2009 to 2014:

Year	Total Calendar Year Withdrawals (Million Gallons, MG)	Calendar Year Average Withdrawal (Million Gallons per Day, MGD)	Calendar Year Maximum Single Day Withdrawal (MGD)
2009	39671	108.7	173
2010	41788.7	114.5	173
2011	37320.4	102.2	173
2012	27794.8	76.2	173
2013	24676.3	67.6	173
2014	23717.1	65	173

Actual Intake Flow (AIF)
The actual intake flow is defined as "… the average volume of water withdrawn on an annual basis by the cooling water intake structures over the past three years." After October 14, 2019, AIF is to be based on flows averaged over the previous five years.

The AIF at BPS from 2012 to 2014 was 69 MGD.

Design Intake Flow (DIF)
The design intake flow is defined as "… the maximum instantaneous rate of flow of water the cooling water intake system is capable of withdrawing from a source waterbody." DIF does not include back-up/redundant pump capacities, or emergency and fire suppression capacity.

Based on a file review, the DIF at BPS is 179 MGD.

MEASURES TO PROTECT FEDERALLY-LISTED THREATENED OR ENDANGERED (T&E) SPECIES, DESIGNATED CRITICAL HABITAT, AND FRAGILE SPECIES OR SHELLFISH

VPDES Permit Regulation 9VAC25-31-330 authorizes the board to include conditions in the permit in response to advice submitted in writing to the DEQ from the U.S. Fish and Wildlife Service, the National Marine Fisheries Service, or any other state or federal agency with jurisdiction over fish, wildlife, or public health that the imposition of specified conditions are necessary to avoid substantial impairment of fish, shellfish, or wildlife resources and to the extent the board determines the conditions are necessary to carry out the provisions of the regulation, the law and of the CWA.

In addition, VPDES Permit Regulation 9VAC25-31-165.C requires existing facilities with cooling water intake structures to meet requirements under section 316(b) of the Clean Water Act determined by the department on a case-by-case, best professional judgment (BPJ) basis. 40 CFR §§125.94(a)(1), 125.94(g), 125.96(g), and 125.97(g) authorize DEQ to establish additional control measures, monitoring, and reporting requirements in the permit designed to minimize incidental take, reduce or remove more than minor detrimental effects to Federally-listed threatened or endangered species or designated critical habitat, or avoid jeopardizing Federally-listed species or destroying or adversely modifying designated critical habitat (e.g. prey base).

40 CFR §125.96(g) mandates that DEQ require monitoring associated with any additional measures designed to minimize incidental take, reduce or remove more than minor detrimental effects to Federally-listed threatened or endangered species or designated critical habitat, or avoid jeopardizing Federally-listed species or destroying or adversely modifying designated critical habitat (e.g. prey base) pursuant to 40 CFR §125.94(g).

State Water Control Law §62.1-44.5.A.3 and VPDES Permit Regulation 9VAC25-31-50.A.2 prohibits the alteration of the physical, chemical or biological properties of State waters and making them detrimental to animal or aquatic life, except in compliance with a permit issued by the Board. In addition, VPDES Permit Regulation 9VAC25-31-190.E requires the permittee, at all times, to properly operate and maintain all facilities and systems of treatment and control (and related appurtenances) which are installed or used by the permittee to achieve compliance with the conditions of the permit.

State Water Control Law §62.1-44.21 and VPDES Permit Regulation 9VAC25-31-190.H authorizes the Board to require owners to furnish plans, specifications, and other pertinent information as may be necessary to accomplish the purposes of the State Water Control Law. In addition, federal regulations at 40 CFR §125.94(g) and §125.97(e) authorize DEQ to establish additional permit monitoring and reporting requirements. Information provided by the permittee under this special condition may be used as a foundation to address other reporting requirements of 40 CFR §125.98(k).

In accordance with EPA's final Phase II Rule, all permit applications of facilities subject to 40CFR §125.98 must be sent to the appropriate Field Office of the U.S Fish & Wildlife Service (USFWS) and/or the National Marine Fisheries Services (NMFS) upon receipt.

- The Services are to be provided a 60-day period of review prior to public notice of the draft or proposed permit.
- The Services are also to be provided a copy of the draft permit, fact sheet, and public notice and an opportunity to comment during the public comment period.

The permit application was sent to EPA, Department of Conservation and Recreation (DCR), Department of Game and Inland Fisheries (DGIF), USFWS and NMFS on January 27, 2015. Coordination with the NMFS was undertaken because of the NMFS's jurisdiction over habitat management of the Atlantic Sturgeon (*Acipenser oxyrinchus oxyrinchus*) and because USFWS indicated in an email dated January 27, 2015, that the Atlantic Sturgeon is known to occur in the James River downstream of Bremo Bluff. The 60-day review period for review of the application ended on March 27, 2015.

- Comments related to the CWIS were received from USFWS on April 3, 2015 and were forwarded to the permittee. The letter from USFWS is included below. USFWS recommended that the Benefits Valuation Study (which was included in the July 2011 Best Technology Available Determination for Reducing Impingement Mortality) not be considered in determining if the cost of reducing IM&E outweighs the benefits. USFWS also requested that non-use benefits be considered in determining the IM&E standards for BPS.
- In accordance with the alternative schedule established in the 2016 permit, all the information required by 40 CFR 122.21(r) necessary to establish impingement mortality and entrainment BTA is required to be submitted 270 days prior to the expiration date of the permit; therefore, the comments from USFWS are not relevant to this permit reissuance since the final BTA determination will be made as part of the next permit reissuance.
- No comments were received from EPA or the NMFS.

A permit application addendum dated August 6, 2015, was received on August 12, 2015. A revised permit application addendum dated October 6, 2015, was received on October 7, 2015. These documents were sent to EPA, NMFS and USFWS.

United States Department of the Interior

FISH AND WILDLIFE SERVICE

Virginia Field Office
6669 Short Lane
Gloucester, VA 23061

April 3, 2015

Ms. Beverly Carver
Virginia Department of Environmental Quality
Valley Regional Office
P.O. Box 3000
Harrisonburg, VA 22801

Re: Dominion – Bremo Power Station, VPDES VA0004138 Reissuance, Fluvanna County, VA, Project # 2015-I-0895

Dear Ms. Carver:

The U.S. Fish and Wildlife Service (Service) has reviewed the information provided by the Virginia Department of Environmental Quality (VDEQ) on January 27, 2015 regarding the referenced project. The draft permit proposes re-issuance of the Dominion – Bremo Power Station (BPS) discharge of condenser cooling water and additional wastewater from other sources to the James River. The following comments are provided under provisions of the Endangered Species Act of 1973 (16 U.S.C. 1531-1544, 87 Stat. 884), as amended.

The federally listed endangered James spinymussel (*Pleurobema collina*) was historically known to occur in the James River in the vicinity of the BPS. This species would be expected to recolonize the area if habitat conditions improve. Four other mussel species, the yellow lance (*Elliptio lanceolata*), Atlantic pigtoe (*Fusconaia masoni*), brook floater (*Alasmidonta varicosa*), and green floater (*Lasmigona subviridis*), occur near the BPS. The brook floater is listed endangered by the Commonwealth of Virginia and the Atlantic pigtoe and green floater are listed threatened by the Commonwealth. The yellow lance does not have Federal or State status. All five mussel species could be impacted by the BPS cooling water intake and discharge.

Related to these mussel species, the Service is concerned about continued thermal discharge and compliance with the revised Clean Water Act 316(b) rule (79 FR 48300-48439) at the BPS.

Continued thermal discharge

The BPS is in compliance with its permitted mixing zone. However, the Service has concerns

about the impacts of the thermal discharge to mussels. These concerns stem from a 2007 survey conducted by the Catena Group during which no common aquatic mollusks were found downstream of the discharge even though such mollusks were abundant in adjacent areas. It was hypothesized that the thermal discharge was the cause.

To mitigate for historic and ongoing adverse impacts to freshwater mussels, Dominion agreed to offer financial support to the Virginia Department of Game and Inland Fisheries (VDGIF) Atlantic Slope mussel propagation efforts at the Service's Harrison Lake National Fish Hatchery (HLNFH). Dominion provided $70,000 to upgrade the facilities at HLNFH plus an additional $50,000 per year over the 5 year life of the Virginia Pollutant Discharge Elimination System (VPDES) permit. Since 2010, these funds have been used to propagate and release over 90,000 freshwater mussels of 7 species into streams within the Chowan, James, Rappahannock, and York River basins.

According to data supplied by Dominion on its application for reissuance of its VPDES permit, the thermal discharge has not changed since the last VPDES permit was issued and it is not expected to change in the near future. Dominion has requested the continuation of the thermal mixing zone into the next permit cycle. If the temperature of the discharge and the size of the permitted mixing zone remain unchanged, it is likely that adverse impacts to mussels will continue.

The Service, VDEQ, VDGIF, and Dominion have agreed to meet on April 27 to discuss how to best ameliorate and/or compensate for these continued adverse impacts. During and after the meeting, we will provide more detailed comments to VDEQ regarding this issue.

Compliance with the revised 316(b) rule

In 2014, the U.S. Environmental Protection Agency issued a rule under Section 316(b) of the Clean Water Act that requires certain National Pollutant Discharge Elimination System permittees, including the BPS, to reduce impingement mortality and entrainment (IM&E) of aquatic organisms at cooling water intake structures (CWIS). To address an earlier version of the 316(b) rule, Veritas Economic Consulting was hired by Dominion to conduct a benefits valuation study at the BPS in 2006. According to this study, the costs associated with bringing the CWIS into compliance with the revised 316(b) rules outweigh the benefits realized from a decrease in IM&E of aquatic organisms (Bingham et al. 2006). The study concluded that since the costs of reducing IM&E outweigh the benefits to recreational fishing, less stringent standards were appropriate for this facility (Bingham et al. 2006).

VDEQ can make IM&E reduction decisions based on a valuation of costs and benefits. However, because the Bingham et al. (2006) study only considered the recreational fishery, we do not believe the benefits associated with reduced IM&E have been fully evaluated. The study claims that non-use benefits are not accounted for in the analysis unless there is potential harm to threatened, endangered, or otherwise important species. Although there is no documentation of IM&E of Federal or State-listed species at this facility, fish that serve as hosts for the larvae of the James spinymussel, Atlantic pigtoe, and brook floater have been impinged, as documented in the report. Impingement of fish hosts represents potential harm to threatened and endangered

species, and therefore the benefits realized by reducing IM&E need to be accounted for in a valuation study.

In addition, the revised 316(b) rule offers the following in regards to threatened and endangered species:

> *Populations of T&E (threatened and endangered) species may suffer increased mortality as direct or indirect consequences of IM&E. T&E species are vulnerable to future extinction or at risk of extinction in the near future and IM&E losses could either lengthen population recovery time, hasten the demise of these species, or counteract the effects of other conservation efforts. For this reason, the population-level and societal values of T&E losses are likely to be considered more important than the absolute number of losses that occur. Due to low population sizes, I&ME from CWISs may represent a substantial portion of the annual reproduction of T&E species* (79 FR 48319).

It is clear that the U.S. Environmental Protection Agency is aware of and appreciates the benefits gained by a reduction in IM&E of threatened and endangered species. According to the revised rule, facilities like BPS that draw at least 125 million gallons of water per day through a CWIS must list social and non-water quality environmental benefits, such as benefits to threatened and endangered species, realized from a reduction in IM&E on their permit application [40 CFR §122.21(r)]. In addition, the rule allows for VDEQ to consider these benefits when making its determination.

Given that the 2006 valuation study did not account for benefits to threatened and endangered species resulting from a reduction of IM&E, we recommend the study not be considered in determining if the cost of reducing IM&E outweighs the benefits. The revised rule allows VDEQ to account for non-use benefits and we request that non-use benefits be considered in determining the IM&E standards for the BPS. We request that you notify the Service as to whether these recommendations will be followed.

If you have any questions, please contact Brett Hillman of this office at (804) 824-2420 or via email at brett_hillman@fws.gov.

Sincerely,

Cindy Schulz
Field Supervisor
Virginia Ecological Services

cc: VDCR, Richmond, VA (Attn: Rene Hypes)
VDGIF, Forest, VA (Attn: Brian Watson)
VDGIF, Richmond, VA (Attn: Ernie Aschenbach)
VDGIF, Richmond, VA (Attn: Amy Ewing)

Literature Cited

Bingham, M.F., K. Mathews, C.M. Spagnardi, D.M. Woodard, J.S. Whaley, and J.C. Kinnell. 2006. Benefits valuation study & significantly greater evaluation: Bremo Power Station. Veritas Economic Consulting, LLC, Cary, NC. Project No. 104.004.

INTERIM BTA – 40 CFR 125.98(b)(5)

VPDES Permit Regulation 9VAC25-31-165.C requires existing facilities with cooling water intake structures to meet the requirements under §316(b) of the Clean Water Act (CWA) determined by the department on a case-by-case, best professional judgment basis. DEQ staff have determined the permitted facility to be subject to the §316(b) requirements because it is a point source that uses or proposes to use one or more cooling water intake structures that withdraws waters of the U.S. for cooling purposes.

Federal regulations at 40 CFR §§125.98(b)(5) and (b)(6) mandate that for permits issued before July 14, 2018, for which an alternate schedule has been established for the submission of information required by 40 CFR §122.21(r), must include interim BTA requirements in the permit based on best professional judgment on a site-specific basis. This special condition outlines interim BTA practices to minimize impingement and entrainment (I&E) mortality and adverse impacts to aquatic organisms.

The following information has been utilized in establishing interim BTA requirements.

COOLING WATER INTAKE STRUCTURE DESCRIPTION:

BPS uses a once-through cooling water system that withdraws cooling water through two CWISs located on the shoreline of the James River and discharges it through a tunnel back to the James River 250 feet downstream via Outfall 001. The total design cooling water intake flow is approximately 179.3 MGD.

The following figure presents the site configuration layout:

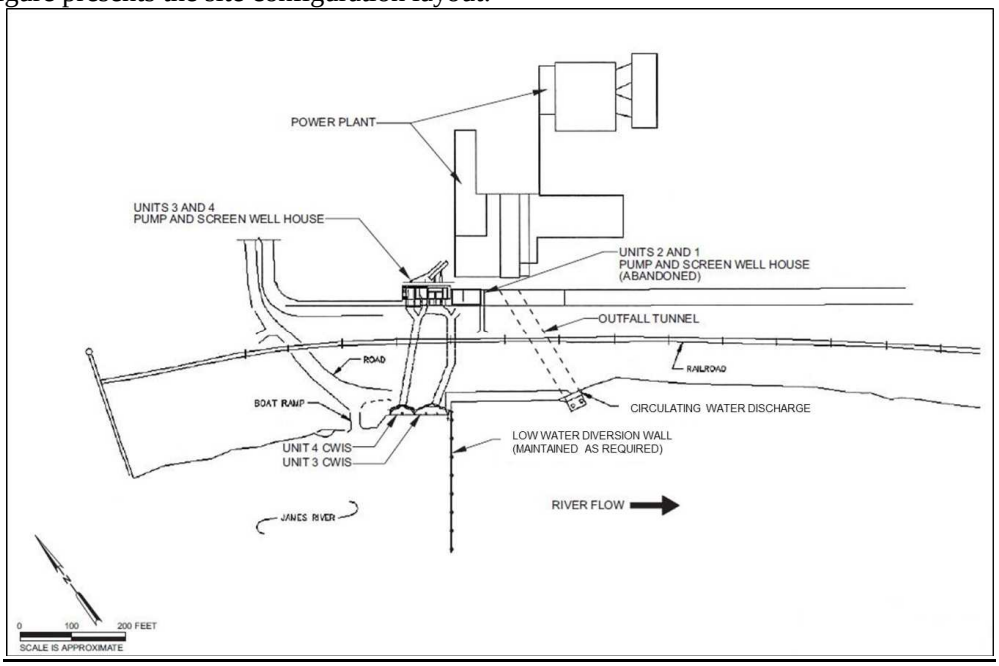

A draft Impingement Characterization Study Plan prepared by HDR Engineering, Inc. dated April 10, 2015 was submitted on April 30, 2015. The impingement study is not required at BPS by the 316(b) rule; however, Dominion has initiated impingement sampling to better inform fish and shellfish protection technology decisions. The sampling period will be from July 2015 to June 2016. The following excerpt from the draft Impingement Characterization Study Plan provides a description of the operation of the CWIS at BPS.

2.2.1 Station Operational History

The BPS cooling water system is operated on demand and is not a base-load facility. BPS contains four, vertical-shaft, wet-pit, circulating water pumps: Units 3 and 4 each contain two circulating water pumps. The pumps are located approximately 12 to 15 feet downstream of the four traveling water screens (one traveling water screen per circulating water pump). The design pump rating for Unit 4 is 41,250 gallons per minute (gpm) for each pump. The design pump rating for Unit 3 is 21,000 gpm for each pump. The total design flow for all four pumps running at capacity is approximately 124,500 gpm, which equates to an intake flow of 277.4 cfs, which is approximately 179.3 MGD. The calculated design through-screen velocity for both bays of Unit 3 is approximately 0.90 feet per second (fps); for both bays of Unit 4 is approximately 1.89 fps.

BPS has seasonal variation in its operations and maintenance (O&M). Four Pumps are needed to ensure unit operating capabilities. Single pump operation may vary by season and system conditions. O&M activities on the generating units are scheduled for the spring months after the end of the winter peaking season. The duration of the maintenance outages depends on the scheduled work that needs to be done on the units. In addition to the four circulating water pumps, there are three screen wash pumps, each connected to a common header. Each pump has a design capacity of 560 gpm, and only two pumps are required to provide the flow requirement to the spray nozzles of all four screens. The Unit 3 screens each require 274 gpm at 70 pounds per square inch gauge (psig) of spray wash water, while the Unit 4 screens require 60 to 80 psig spray wash water.

2.2.2 Intake Structure

Cooling water for both power-generating units at BPS is withdrawn from the James River through two adjacent intake structures with trash racks positioned parallel to the river flow. Cooling water is conveyed from the intake concrete tunnels to two separate screen houses, one for each unit. The main river channel width at the intake structures is approximately 450 to 550 feet across and has normal water depths ranging from 7 to 26 feet, depending on river conditions.

There is a low rock deflector wall to divert surface river flow and to help divert ice and river debris away from the intakes. The intake structures are designed to operate at river levels greater than El. 73.5 feet. The mean water level is El. 78.3 feet. All elevations in this report refer to station Datum in which 100.0 feet corresponds to United States Coastal and Geodetic Survey (USC & GS) Datum 222.44 feet.

The river intake structure for Unit 3 is 64 feet wide with three 20-foot bays. Unit 4 has a 46-footwide river intake structure with two 21-foot bays. There are two tunnels between the trash rack structure and the screen house. The Unit 3 tunnel is approximately 210 feet long, while the Unit 4 tunnel is approximately 170 feet long. The tunnels are 10 feet wide by 7.75 feet high for Unit 3 and 7 feet square for Unit 4. A trash rack extends across the entire length of both intake structures and prevents debris and ice from entering the screen house. The trash rack extends from the intake structure at approximately El. 71.0 feet to the intake deck at approximately El. 90.5 feet. The trash rake and trash rake hoist housing are operated at this level. The trash rake structure extends above the extreme high water level, at approximately El. 108.0 feet, in order to keep the trash rake hoist dry during high water. The steel trash rack has 4-inch by 3/8-inch bars with a 4.5-inch bar spacing and a 4-inch by 1/8-inch clear opening. During periods of high water, the trash racks are totally submerged. During periods of extremely low flow, the flashboards create a pool at the trash rack structure to enable diversions.

There are four traveling water screen bays, two for each unit. There are four circulating water pumps located approximately 12 to 15 feet downstream of the four traveling water screens (one circulating water pump per screen). The circulating water pumps supply cooling water, service water, and ash sluice water to the facility. Three raw water pumps and three screen wash water pumps draw water downstream of the Units 3 and 4 traveling screens. Except for the common discharge, each unit has separate circulating water systems. The circulating water discharge is located about 250 feet downstream of the intake structure. Plan and section drawings of the CWIS are provided on Figures 2-6, and 2-7, respectively.

BPS is equipped with four traveling water screens, two for each unit. The Unit 3 screens are through-flow screens and are 8 feet wide with 3/8-inch mesh. Through-flow screens are conventional screens which are oriented perpendicular to the water flow. Unit 4 has two dualflow (Brackett-Green) screens. Dual-flow traveling water screens are oriented parallel to the water flow. Water enters both screen faces and exits out the middle of the screens. Each screen contains 4-foot-wide screen baskets that yield approximately the same effective area as the 8- foot-wide conventional traveling screens. The Unit 4 screens have 3/16-inch mesh.

Both Unit 3 and Unit 4 vertical traveling water screens are designed to run in either “automatic” or “manual” mode. In “automatic” mode, the screen motors do not rotate until the differential pressure across the screen reaches a certain point. In “manual” mode, the screen motors rotate continuously. Additionally, the screen wash pumps go into a recirculation mode when the screen motors are in the “automatic” mode. The screens have a spray wash system with a spray header and a debris collection/fish return trough that discharges to the cooling water discharge tunnel on the station side of the railroad track.

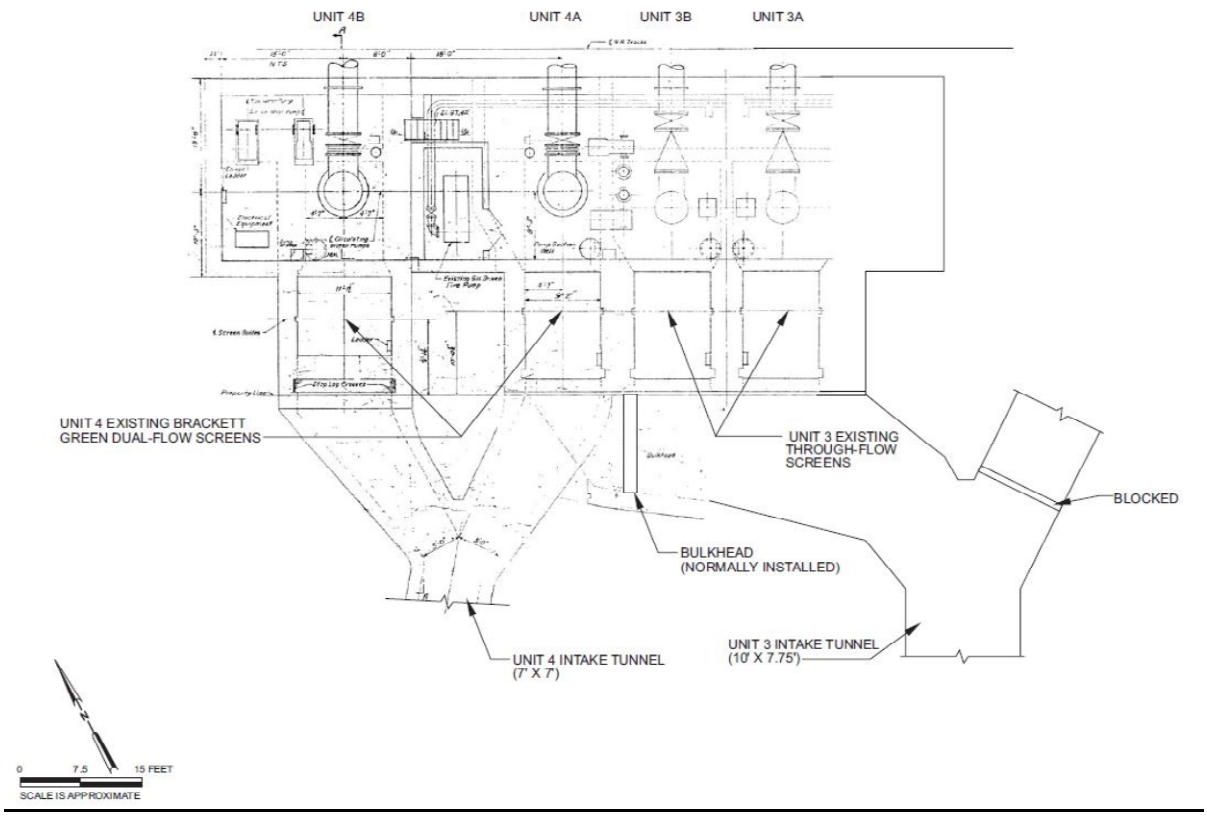

Figure 2-6. BPS Pump and Screen Well House – Plan View

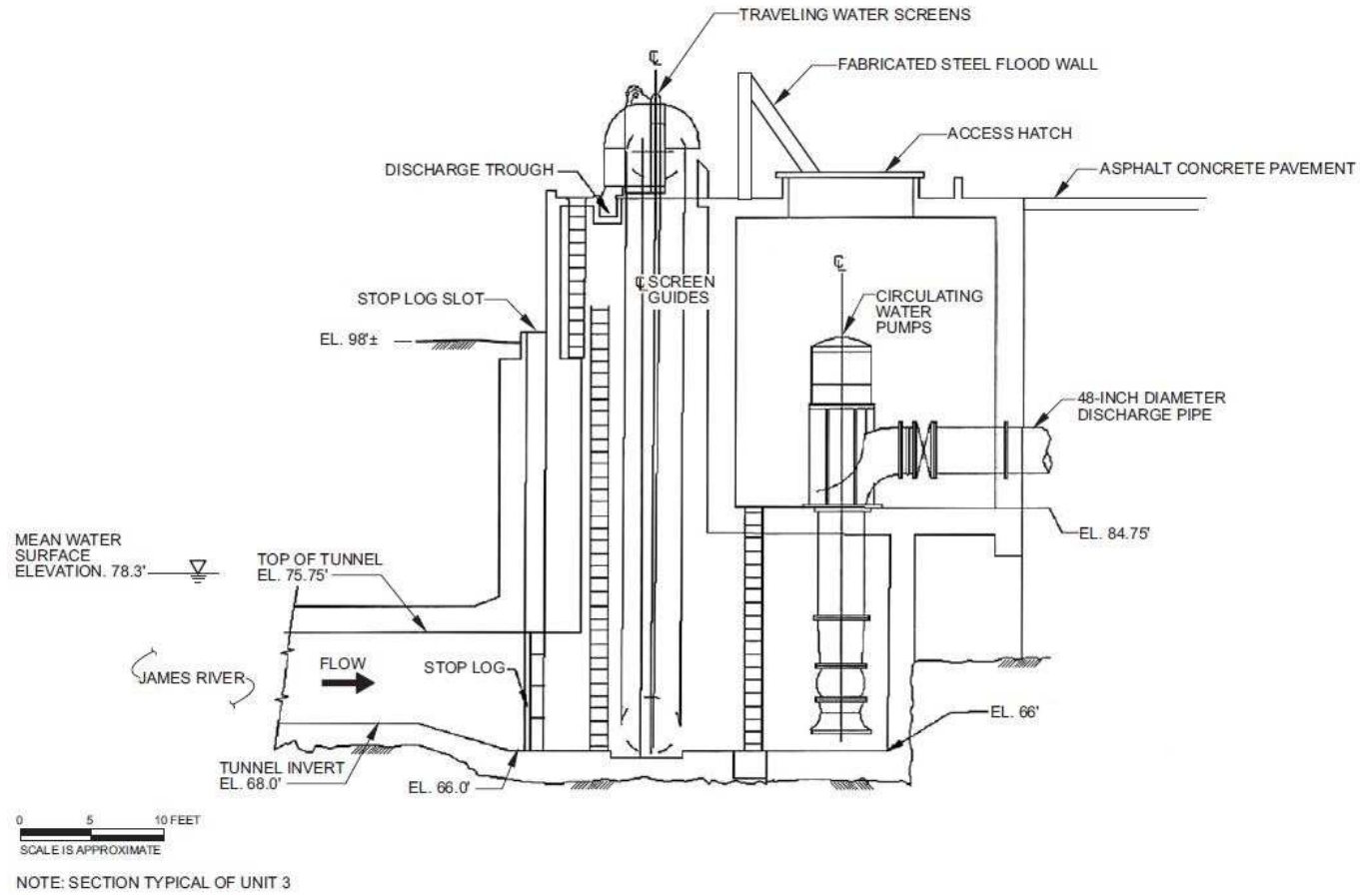

Figure 2-7. BPS Pump and Screen Well House – Section View

<u>Photos from Site Visit on May 5, 2015:</u>

 BPS has 2 adjacent CWISs located on the north bank of the James River. The intake trash rack is located in front of the CWIS. Debris is collected from the intake trash rack and hauled offsite. There is a low rock deflector wall in the James River to divert surface river flow and to help divert ice and river debris away from the intakes.	 View from behind CWIS. Trash collecting on the intake trash rack is pulled up onto land and then hauled offsite.
 Pumps located at Outfall 001 are used in the event that Outfall 001 flow is used for deicing the CWISs (located just upstream of Outfall 001). The water is sprayed on the CWIS to prevent ice buildup.	 View from the CWIS towards the Screen House. There are railroad tracks located between the CWIS and the screen house. The screen houses are not located near the CWISs because of flooding issues.

Cooling water is conveyed from the intake concrete tunnels to 2 separate screen houses. There are 4 traveling water screen bays.

River water is sprayed on the traveling screens to dislodge debris and fish. The traveling screen backwash enters a trough and then drops 20 feet. The traveling screen backwash is recognized as Internal Outfall 101.

The traveling screen backwash continues to flow through a trough.

The traveling screen backwash drops another 20 feet into the tunnel serving Outfall 001. Access is through the manhole located in the center of the picture.

The traveling screen backwash (Internal Outfall 101) is combined with the once through heated condenser cooling water and discharges to the James River through Outfall 001 shown in the above picture.

In evaluating interim BTA, the river intake structures were considered. As described in the draft Impingement Characterization Study Plan, the river intake structure for Unit 3 is 64 feet wide with three 20-foot bays. Unit 4 has a 46-footwide river intake structure with two 21-foot bays. There are two tunnels between the trash rack structure and the screen house. The Unit 3 tunnel is approximately 210 feet long, while the Unit 4 tunnel is approximately 170 feet long. The tunnels are 10 feet wide by 7.75 feet high for Unit 3 and 7 feet square for Unit 4.

While the maximum design through-screen intake velocities at the four traveling water screens exceeds 0.5 ft/sec, the velocities at the river intake structures where the trash racks are located are less than 0.5 ft/sec as shown in the calculations below.

<u>Unit 3</u>
- 3 sections, each 19 ft wide
- 18.83 ft height with 2 ft of concrete roof
- 93.6 ft^3/sec design flow rate

Screen area: 3 x 19 ft x (18.83 ft – 2 ft) = 959.31 ft^2
Velocity: 93.6 ft^3/s / 959.31 ft^2 = **0.0976 ft/sec**

<u>Unit 4</u>
- 2 sections, each 21 ft wide
- 18.83 ft height with 2ft of concrete roof
- 183.8 ft^3/sec design flow rate

Screen area: 2 x 21 ft x (18.83 ft – 2 ft) = 706.86 ft^2
Velocity: 183.8 ft^3/sec / 706.86 ft^2 = **0.260 ft/sec**

EPA documents and studies have found that fish impingement mortality can be reduced where velocities are 0.5 fps or less because it allows fish to escape the intake current. According to the preamble to EPA's final Phase II Rule, swim speed studies have demonstrated that intake velocities of 0.5 fps or less may result in 96 percent or better reductions in impingement mortality for most species.

In addition to these low velocities at the river intake structures, any fish or other aquatic organisms that pass through the trash racks at the river intake structures must travel through the tunnels before reaching the traveling water screens. The dark conditions that exist in the approximately 210 ft long Unit 3 tunnel and 170 ft long Unit 4 tunnel may serve as a behavioral deterrent encouraging fish to swim back through the trash rack.

Accordingly, based on best professional judgment and on a site-specific basis, DEQ believes that, if employed throughout the term of this permit, the following interim BTA practices will minimize impingement and entrainment mortality and adverse impacts to aquatic organisms:

a. Maintain intake velocities of less than or equal to 0.5 ft/sec at the river intake structures; and
b. Maintain the current configuration of the two tunnels between the trash rack structure and the screen house.

<u>IMPINGEMENT AND ENTRAINMENT CONTROL TECHNOLOGY PREVENTATIVE MAINTENANCE</u>

VPDES Permit Regulation 9VAC25-31-190.E requires the permittee, at all times, to properly operate and maintain all facilities and systems of treatment and control (and related appurtenances) which are installed or used by the permittee to achieve compliance with the conditions of the permit.

VISUAL OR REMOTE INSPECTIONS

VPDES Permit Regulation 9VAC25-31-210.A authorizes the Board to establish permit conditions to provide for and assure compliance with all applicable requirements of the law, the CWA and regulations. Federal regulations at 40 CFR §125.96(e) requires visual inspections or the employment of remote monitoring devices to be conducted at least weekly during the period any cooling water intake structure is in operation to ensure any technologies operated are maintained and operated to function as designed, including those installed to protect Federally-listed threatened or endangered species or designated critical habitat.

40 CFR §125.96 authorizes DEQ to establish monitoring requirements, and specific protocols, as appropriate. Provisions for inspection waivers, adverse weather conditions, and deficiency discoveries were developed, using as a foundation, comparable provisions found in the VPDES General Permit for Stormwater Discharges Associated with Industrial Activity, 9VAC25-151-70, Part I.A.2.e, A.3. and A.6.b.

ANNUAL CERTIFICATION STATEMENT REQUIREMENTS

VPDES Permit Regulation 9VAC25-31-210.A authorizes the Board to establish permit conditions to provide for and assure compliance with all applicable requirements of the law, the CWA and regulations. Federal regulations at 40 CFR §125.97(c) requires the permittee to annually submit a certification statement signed by a responsible corporate officer reporting whether there have been substantial modifications to the operation at any unit at the facility that impacts cooling water withdrawals or operation of the cooling water intake structures, or if information contained in the previous year's annual certification remains pertinent.

FEDERAL ENDANGERED SPECIES ACT COMPLIANCE

State Water Control Law §62.1-44.5.A.3 and VPDES Permit Regulation 9VAC25-31-50.A.2 prohibits the alteration of the physical, chemical or biological properties of State waters and making them detrimental to animal or aquatic life, except in compliance with a permit issued by the Board.

In addition, VPDES Permit Regulation 9VAC25-31-210.A authorizes the Board to establish permit conditions to provide for and assure compliance with all applicable requirements of the law, the CWA and regulations. 40 CFR §125.98(j) stipulates that nothing in Subpart J of Part 125 of the Code of Federal Regulations authorizes the take, as defined at 16 U.S.C. 1532(19), of threatened or endangered species of fish or wildlife. Such take is prohibited under the Endangered Species Act unless it is exempted pursuant to 16 U.S.C 1536(o) or permitted pursuant to 16 U.S.C 1539(a). Absent such exemption or permit, any facility must not take threatened or endangered species. 40 CFR §125.98(b)(1) requires all NPDES permits for facilities subject to §316(b) of the Clean Water Act to include as a permit condition the specific language of this special condition.

APPENDIX J

WHOLE EFFLUENT TOXICITY (WET) EVALUATION

Applicability of Toxics Management Program:

The applicability criteria for a facility to perform toxicity testing is contained in the Departments Guidance Memo No. 00-2012, Toxics Management Program Implementation Guidance, 08/24/00, Part IV. The Standard Industrial Code (SIC) for BPS is 4911, Electrical Generation, which is included in Appendix A of the TMP Guidance. In addition, the Instream Waste Concentration (IWC) is greater than or equal to 33% (GM 00-2012, Sections IV.1.A. and IV.1.B, respectively).

Outfall 001 has not been screened for WET since at least the 1995 permit reissuance because the discharge consists of only once-through condenser cooling water withdrawn from the James River, which is not chemically altered in any way. Because the data are 20 years old and unavailable for review, Outfall 001 will be re-screened at this reissuance.

Summary of Toxicity Testing:

- Outfall 002: The previous permit required quarterly-to-annual acute and chronic testing using *Ceriodaphnia dubia* at Outfall 002. Tables 1 and 2 contain summaries of the toxicity testing results for this outfall during the term of the permit.

- Outfall 004: The previous permit also required annual acute testing using *Ceriodaphnia dubia* at Outfall 004. Table 3 contains a summary of the toxicity testing results for this outfall during the term of the permit.

The toxicity data for Outfalls 002 and 004 were evaluated using the procedures outlined in the TMP guidance.

- Outfall 001: No data is available for review at this outfall.

- Outfall 003 and 006: Outfall 003 and outfall 006 currently discharge only stormwater with no exposure to industrial activity and therefore require no WET monitoring. Therefore, no data is available for review at these outfalls. During closure activities, Outfalls 003 and 006 will be authorized to discharge wastewater from dewatering activities and toxicity testing will be required during this time.

Rationale for Acute versus Chronic Toxicity Testing:

- Outfall 001 (Once-Through Condenser Cooling Water): As shown in Table 4, the IWCa is 96.28%. Since the IWCa › 33%, the acute tests require the determination of a valid NOAEC. Additionally, Outfall 001 is a continuous discharge with a IWC_c of 40.98%. Since the IWCc › 1%, Outfall 001 must also be assessed for chronic toxicity.

- Outfalls 002 and 004 at the combined flow of 4.2912 MGD: As shown in Table 5, the IWC_a is 26.55%. Since the IWC_a ‹ 33%, the acute tests require the determination of a valid LC_{50}. The IWC_c is 1.09. Since the IWCc › 1%, Outfalls 002 and 004 must also be assessed for chronic toxicity.

- Outfalls 002, 003, 004, and 006 at combined flow of 10.2912 MGD: As shown in Table 6, the IWC_a is 46.02%. Since the IWCa › 33%, the acute tests require the determination of a valid NOAEC. The IWC_c is 2.58 %. Since the IWCc › 1%, Outfalls 002, 003, 004, and 006 must also be assessed for chronic toxicity.

- Outfall 002 (West Treatment Pond) Final Configuration: As shown in Table 7, the IWC_a is 24.78%. Since the IWCa ‹ 33%, the acute tests require the determination of a valid LC_{50}. The IWC_c is 1.04 %. Since the IWCc › 1%, Outfall 002 must also be assessed for chronic toxicity.

Rationale for Most Sensitive Species:
Ceriodaphnia dubia was previously designated as the most sensitive species for Outfalls 002 and 004. This designation has been carried forward for the combination of Outfalls 002 and 004. During the dewatering activities, toxicity testing will be required for both *Pimephales promelas and Ceriodaphnia dubia*. Language has been included to allow testing to be required for only the more sensitive species if, after a minimum of four tests, results establish the more sensitive species per GM 00-2012, Section VII.2.B.

Since a more sensitive species has not been determined for Outfall 001, both *Pimephales promelas* and *Ceriodaphnia dubia* testing is required at this outfall.

Sample Type:

- Outfall 001: A grab sample is representative of the discharge at Outfall 001.

- Outfalls 002 and 004 at the combined flow of 4.2912 MGD: Grab samples are considered representative for Outfalls 002 and 004 for the combined flow of 4.2912 MGD.

- Outfalls 002, 003, 004, and 006 at combined flow of 10.2912 MGD during dewatering activities: 4-Hour composite samples are required since that is the sample type for the chemical parameters during this period.

- Outfall 002 (West Treatment Pond) Final Configuration: Grab samples are considered representative for Outfall 002 at its final configuration.

Monitoring Frequency:

- Outfall 001: Monitoring shall be performed quarterly until a total of four quarters is completed. The results from the quarterly testing will be evaluated to determine if there is a need for WET limits. If no limits are deemed necessary, and all tests are acceptable, the facility will move to annual monitoring.

- Outfalls 002 and 004 at combined flow of 4.2912 MGD: The monitoring frequency is annual based on an evaluation of the toxicity testing.

- Outfalls 002, 003, 004, and 006 at combined flow of 10.2912 MGD during dewatering activities: The monitoring frequency is monthly during the dewatering activities.

- Outfall 002 (West Treatment Pond) Final Configuration: Monitoring shall be performed quarterly until a total of four quarters is completed. The results from the quarterly testing will be evaluated to determine if there is a need for WET limits. If no limits are deemed necessary, and all tests are acceptable, the facility will move to annual monitoring.

Calculation of WLAs: Acute and chronic WLAs were generated from the WETLimit10.xls spreadsheet by entering the design flow, stream flows, and stream mix percentages for the respective stream flows.

Dilution Series:
The recommended dilution series for chronic tests are shown in italics in:

- Table 4 for Outfall 001
- Table 5 for Outfall 002 and 004 for the combined flow of 4.2912 MGD
- Table 6 for Outfalls 002, 003, 004, and 006 during the combined flow of 10.2912 MGD
- Table 7 for Outfall 002 West Treatment Pond Final Configuration

The recommended dilution series for acute tests for all outfalls and stages is the standard 0.5 series. The only exception to this is for dewatering activities where a limit of 100% minimum applies; then only the control and 100% dilution are required.

Stat.exe Limit Evaluation:
The WLAs are used in the Department's Stat.exe program in order to perform a statistical evaluation of the acute and chronic test results expressed as Toxicity Units (TUs). The toxicity data are analyzed separately by species and test type (acute or chronic).

Chronic Stat.exe Limit Evaluation:
Outfall 002: The summary of the chronic toxicity testing data are shown in Table 2. The results of the Stat.exe evaluation are shown in Table 8. Based on the evaluation of the chronic toxicity data, a WET Limit is not required at this time.

Outfall 004: No chronic toxicity testing data are available for analysis.

Outfall 001: No chronic toxicity testing data are available for analysis.

Acute Stat.exe Limit Evaluation:
Outfall 002: The summary of the acute toxicity testing data (Table 1) shows that the No Observed Adverse Effects Concentration (NOAEC) in every test was 100%. Based on the acute toxicity data all showing no toxicity, no acute limit was determined to be necessary.

Outfall 004: The summary of the acute toxicity testing data (Table 3) shows that the LC_{50} in every test was > 100%. Also, there was 100 percent survival in 100% effluent in all tests. Based on the acute toxicity data all showing no toxicity, no acute limit was determined to be necessary.

Outfall 001: No acute toxicity testing data are available for analysis.

WET Limits for combined flow of 10.2912 MGD during dewatering activities:
Acute and chronic WET limits were established for the period when the dewatering activities are occurring. The acute WET limit of 1.0 TU_a and chronic WET limit of 6.25 TU_c are shown on Table 6. The rationale for the WET limits is presented in APPENDIX E.

Peer Reviewer: Dawn Jeffries
Date:October 20, 2015

Table 1
Summary of Acute Toxicity Testing (NOAEC) – Outfall 002

Monitoring Period	Test Date	48-Hr. Static Acute *Ceriodaphnia dubia* (%)
1st Quarter 10/1/2010 – 12/31/2010	11/4/10	100
2nd Quarter 1/1/2011 – 03/31/2011	1/13/11	100
3rd Quarter 4/1/2011 – 6/30/2011	4/7/11	100
4th Quarter 7/1/2011 – 9/30/2011	7/14/11	100
1st Annual 1/1/2012 – 12/31/2012	4/23/12	100
2nd Annual 1/1/2013 – 12/31/2013	5/2/13	100
3rd Annual 1/1/2014 – 12/31/2014	4/1/14	100

Table 2
Summary of Chronic Toxicity Testing – Outfall 002

Monitoring Period	Test Date	Chronic 3-Brood Static Renewal Survival and Reproduction *Ceriodaphnia dubia*		48-hr LC_{50}
		Survival (TUc)	Reproduction (TUc)	
6th Annual* 1/10/10 – 12/31/10	8/3/10	1.0	1.54	>100
1st Quarter 10/1/2010 – 12/31/2010	11/04/10	1.0	1.0	>100
2nd Quarter 1/1/2011 – 3/31/2011	1/11/11	1.0	1.67	>100
3rd Quarter 4/1/2011 – 6/30/2011	4/5/11	1.0	1.0	>100
4th Quarter 7/1/2011 – 9/30/2011	7/12/11	1.0	1.67	>100
1st Annual 1/1/2012 – 12/31/2012	4/23/12	1.0	1.67	>100
2nd Annual 1/1/2013 – 12/31/2013	5/1/13	1.0	1.67	>100
3rd Annual 1/1/2014 – 12/31/2014	4/1/14	1.0	1.0	>100

* This toxicity test was conducted on August 3, 2010, just before the permit was reissued on August 13, 2010; therefore, this test will be evaluated with this permit reissuance.

Table 3
Summary of Acute Toxicity Testing (LC_{50}) – Outfall 004

Monitoring Period	Test Date	48-Hr. Static Acute *Ceriodaphnia dubia* (TUa)	48-Hr. Static Acute *Ceriodaphnia dubia* (% Survival in 100% Effluent)
6th Annual* 1/1/2010 – 12/31/2010	8/3/10	<1.0	100
1st Annual 10/1/2011 – 12/31/2011	4/5/11	<1.0	100
2nd Annual 1/1/2012 – 12/31/2012	4/23/12	<1.0	100
3rd Annual 1/1/2013 – 12/31/2013	5/2/13	<1.0	100
4th Annual 1/1/2014 – 12/31/2014	4/1/14	<1.0	100

* This toxicity test was conducted on August 3, 2010, just before the permit was reissued on August 13, 2010. Therefore, this test will be evaluated with this permit reissuance.

Table 4
WETLim10.xls Spreadsheet – Outfall 001

Spreadsheet for determination of WET test endpoints or WET limits

Excel 97
Revision Date: 12/13/13
File: WETLIM10.xls
(MIX.EXE required also)

Acute Endpoint/Permit Limit — **Use as LC_{50} in Special Condition, as TUa on DMR**

ACUTE	100% =	NOAEC	LC_{50} =	NA	% Use as	NA	TUa
ACUTE WLAa		0.31158503	Note: Inform the permittee that if the mean of the data exceeds				
			this TUa:	1.0	a limit may result using STATS.EXE		

Chronic Endpoint/Permit Limit — **Use as NOEC in Special Condition, as TUc on DMR**

CHRONIC	3.11585033	TU_c	NOEC =	33	% Use as	3.03	TU_c
BOTH*	3.11585033	TU_c	NOEC =	33	% Use as	3.03	TU_c
AML	3.11585033	TU_c	NOEC =	33	% Use as	3.03	TU_c
ACUTE WLAa,c		3.11585025	Note: Inform the permittee that if the mean				
CHRONIC WLAc		2.44035533	of the data exceeds this TUc:				1.28044209
* Both means acute expressed as chronic			a limit may result using STATS.EXE				

Enter data in the cells with blue type:

Entry Date:	10/16/15
Facility Name:	Dominion Bremo
VPDES Number:	VA0004138
Outfall Number:	001

			% Flow to be used from MIX.EXE		Diffuser /modeling study?		
Plant Flow:	157.6	MGD			Enter Y/N	n	
Acute 1Q10:	179	MGD	3.4	%	Acute	1	:1
Chronic 7Q10:	227	MGD	100	%	Chronic	1	:1

Are data available to calculate CV? (Y/N)	N	(Minimum of 10 data points, same species, needed)	Go to Page 2
Are data available to calculate ACR? (Y/N)	N	(NOEC<LC50, do not use greater/less than data)	Go to Page 3

IWC_a	96.2819056	%	Plant flow/plant flow + 1Q10
IWC_c	40.97763911	%	Plant flow/plant flow + 7Q10

NOTE: If the IWCa is >33%, specify the NOAEC = 100% test/endpoint for use

Dilution, acute	1.038616751	100/IWCa
Dilution, chronic	2.44035533	100/IWCc

WLA_a	0.311585025	Instream criterion (0.3 TUa) X's Dilution, acute
WLA_c	2.44035533	Instream criterion (1.0 TUc) X's Dilution, chronic
$WLA_{a,c}$	3.115850254	ACR X's WLA_a - converts acute WLA to chronic units

ACR -acute/chronic ratio	10	LC50/NOEC (Default is 10 - if data are available, use tables Page 3)				
CV-Coefficient of variatior	0.6	Default of 0.6 - if data are available, use tables Page 2)				
Constants eA	0.4109447	Default = 0.41				
eB	0.6010373	Default = 0.60				
eC	2.4334175	Default = 2.43				
eD	2.4334175	Default = 2.43 (1 samp)	No. of samples	1		

****The Maximum Daily Limit is calculated from the lowest LTA, X's eC. The LTAa,c and MDL using it are driven by the ACR.**

$LTA_{a,c}$	1.280442148	WLAa,c X's eA						
LTA_c	1.466744579	WLAc X's eB					Rounded NOEC's	%
MDL** with $LTA_{a,c}$	3.11585033	TU_c	NOEC =	32.093968	(Protects from acute/chronic toxicity)		NOEC = 33	%
MDL** with LTA_c	3.569201925	TU_c	NOEC =	28.017468	(Protects from chronic toxicity)		NOEC = 29	%
AML with lowest LTA	3.11585033	TU_c	NOEC =	32.093968	Lowest LTA X's eD		NOEC = 33	

IF ONLY ACUTE ENDPOINT/LIMIT IS NEEDED, CONVERT MDL FROM TU_c to TU_a

							Rounded LC50's	%
MDL with $LTA_{a,c}$	0.311585033	TU_a	LC50 =	320.939677	%	Use NOAEC=100%	LC50 = NA	%
MDL with LTA_c	0.356920193	TU_a	LC50 =	280.174678	%	Use NOAEC=100%	LC50 = NA	

CHRONIC DILUTION SERIES TO RECOMMEND

	Monitoring % Effluent	Monitoring TUc	Limit % Effluent	Limit TUc
Dilution series based on data mean	79	1.280442		
Dilution series to use for limit			33	3.03
Dilution factor to recommend:	0.888819442		0.574456265	
Dilution series to recommend:	100.0	1.00	100.0	1.00
	88.9	1.13	57.4	1.74
	79.0	1.27	33.0	3.03
	70.2	1.42	19.0	5.28
	62.4	1.60	10.9	9.18
Extra dilutions if needed	55.47	1.80	6.26	15.99
	49.30	2.03	3.59	27.83

Table 5
WETLim10.xls Spreadsheet – Combined Flow = 4.2912 MGD

Spreadsheet for determination of WET test endpoints or WET limits

Excel 97				Acute Endpoint/Permit Limit			Use as LC_{50} in Special Condition, as TUa on DMR				
Revision Date: 12/13/13											
File: WETLIM10.xls				ACUTE	1.12961412	TUa	LC_{50} =	89	% Use as	1.12	TUa
(MIX.EXE required also)											
				ACUTE WLAa		1.12961409	Note: Inform the permittee that if the mean of the data exceeds				
							this TUa:	1.0	a limit may result using STATS.EXE		
				Chronic Endpoint/Permit Limit			Use as NOEC in Special Condition, as TUc on DMR				
				CHRONIC	11.2961412	TU_c	NOEC =	9	% Use as	11.11	TU_c
				BOTH*	11.2961412	TU_c	NOEC =	9	% Use as	11.11	TU_c
Enter data in the cells with blue type:				AML	11.2961412	TU_c	NOEC =	9	% Use as	11.11	TU_c
Entry Date:	10/16/15			ACUTE WLAa,c		11.2961409		Note: Inform the permittee that if the mean			
Facility Name:	Dominion Bremo			CHRONIC WLAc		91.6506339		of the data exceeds this TUc:			4.64208903
VPDES Number:	VA0004138			* Both means acute expressed as chronic				a limit may result using STATS.EXE			
Outfall Number:	002 and 004 combined										
				% Flow to be used from MIX.EXE				Diffuser /modeling study?			
Plant Flow:	4.2912	MGD						Enter Y/N	n		
Acute 1Q10:	341	MGD		3.48	%			Acute	1	:1	
Chronic 7Q10:	389	MGD		100	%			Chronic	1	:1	
Are data available to calculate CV? (Y/N)				N	(Minimum of 10 data points, same species, needed)					Go to Page 2	
Are data available to calculate ACR? (Y/N)				N	(NOEC<LC50, do not use greater/less than data)					Go to Page 3	
IWC_a	26.55774229	%	Plant flow/plant flow + 1Q10				NOTE: If the IWCa is >33%, specify the				
IWC_c	1.091099928	%	Plant flow/plant flow + 7Q10				NOAEC = 100% test/endpoint for use				
Dilution, acute	3.765380313		100/IWCa								
Dilution, chronic	91.65063386		100/IWCc								
WLA_a	1.129614094	Instream criterion (0.3 TUa) X's Dilution, acute									
WLA_c	91.65063386	Instream criterion (1.0 TUc) X's Dilution, chronic									
$WLA_{a,c}$	11.29614094	ACR X's WLA_a - converts acute WLA to chronic units									
ACR -acute/chronic ratio	10	LC50/NOEC (Default is 10 - if data are available, use tables Page 3)									
CV-Coefficient of variatior	0.6	Default of 0.6 - if data are available, use tables Page 2)									
Constants eA	0.4109447	Default = 0.41									
eB	0.6010373	Default = 0.60									
eC	2.4334175	Default = 2.43									
eD	2.4334175	Default = 2.43 (1 samp)		No. of samples		1	**The Maximum Daily Limit is calculated from the lowest				
							LTA, X's eC. The LTAa,c and MDL using it are driven by the ACR.				
$LTA_{a,c}$	4.64208925	WLAa,c X's eA									
LTA_c	55.08544952	WLAc X's eB								Rounded NOEC's	%
MDL** with $LTA_{a,c}$	11.29614122	TU_c	NOEC =	8.852581	(Protects from acute/chronic toxicity)					NOEC = 9	%
MDL** with LTA_c	134.0458968	TU_c	NOEC =	0.746013	(Protects from chronic toxicity)					NOEC = 1	%
AML with lowest LTA	11.29614122	TU_c	NOEC =	8.852581	Lowest LTA X's eD					NOEC = 9	
IF ONLY ACUTE ENDPOINT/LIMIT IS NEEDED, CONVERT MDL FROM TU_c to TU_a											
										Rounded LC50's	%
MDL with $LTA_{a,c}$	1.129614122	TU_a	LC50 =	88.525805	%					LC50 = 89	%
MDL with LTA_c	13.40458968	TU_a	LC50 =	7.460131	%					LC50 = 8	

CHRONIC DILUTION SERIES TO RECOMMEND

	Monitoring % Effluent	Monitoring TUc	Limit % Effluent	Limit TUc
Dilution series based on data mean	22	4.642089		
Dilution series to use for limit			9	11.11
Dilution factor to recommend:	0.469041576		0.3	
Dilution series to recommend:	100.0	1.00	100.0	1.00
	46.9	2.13	30.0	3.33
	22.0	4.55	9.0	11.11
	10.3	9.69	2.7	37.04
	4.8	20.66	0.8	123.46
Extra dilutions if needed	2.27	44.05	0.24	411.52
	1.06	93.91	0.07	1371.74

Table 6
WETLim10.xls Spreadsheet – Combined Flow = 10.2912 MGD

Spreadsheet for determination of WET test endpoints or WET limits

Excel 97				Acute Endpoint/Permit Limit			Use as LC_{50} in Special Condition, as TUa on DMR			
Revision Date: 12/13/13										
File: WETLIM10.xls				ACUTE	100% =	NOAEC	LC_{50} =	NA	% Use as	NA	TUa
(MIX.EXE required also)										
				ACUTE WLAa		0.65189482	Note: Inform the permittee that if the mean of the data exceeds			
							this TUa:	1.0	a limit may result using STATS.EXE	
				Chronic Endpoint/Permit Limit			Use as NOEC in Special Condition, as TUc on DMR			
				CHRONIC	6.51894839	TU_c	NOEC =	16	% Use as	6.25	TU_c
				BOTH*	6.51894839	TU_c	NOEC =	16	% Use as	6.25	TU_c
Enter data in the cells with blue type:				AML	6.51894839	TU_c	NOEC =	16	% Use as	6.25	TU_c
Entry Date:	10/16/15			ACUTE WLAa,c		6.51894823		Note: Inform the permittee that if the mean			
Facility Name:	Dominion Bremo			CHRONIC WLAc		38.7992848		of the data exceeds this TUc:			2.6789271
VPDES Number:	VA0004138			* Both means acute expressed as chronic				a limit may result using STATS.EXE			
Outfall Number:	002, 003, 004 and 006 combined										
				% Flow to be used from MIX.EXE				Diffuser /modeling study?			
Plant Flow:	10.2912	MGD						Enter Y/N	n		
Acute 1Q10:	341	MGD		3.54	%			Acute	1	:1	
Chronic 7Q10:	389	MGD		100	%			Chronic	1	:1	
Are data available to calculate CV? (Y/N)				N	(Minimum of 10 data points, same species, needed)					Go to Page 2	
Are data available to calculate ACR? (Y/N)				N	(NOEC<LC50, do not use greater/less than data)					Go to Page 3	
IWC_a	46.0196936	%	Plant flow/plant flow + 1Q10				NOTE: If the IWCa is >33%, specify the				
IWC_c	2.577367094	%	Plant flow/plant flow + 7Q10				NOAEC = 100% test/endpoint for use				
Dilution, acute	2.172982743		100/IWCa								
Dilution, chronic	38.79928483		100/IWCc								
WLA_a	0.651894823	Instream criterion (0.3 TUa) X's Dilution, acute									
WLA_c	38.79928483	Instream criterion (1.0 TUc) X's Dilution, chronic									
$WLA_{a,c}$	6.518948228	ACR X's WLA_a - converts acute WLA to chronic units									
ACR -acute/chronic ratio	10	LC50/NOEC (Default is 10 - if data are available, use tables Page 3)									
CV-Coefficient of variatior	0.6	Default of 0.6 - if data are available, use tables Page 2)									
Constants eA	0.4109447	Default = 0.41									
eB	0.6010373	Default = 0.60									
eC	2.4334175	Default = 2.43									
eD	2.4334175	Default = 2.43 (1 samp)		No. of samples		1	**The Maximum Daily Limit is calculated from the lowest				
							LTA, X's eC. The LTAa,c and MDL using it are driven by the ACR.				
$LTA_{a,c}$	2.678927224	WLAa,c X's eA									
LTA_c	23.31981739	WLAc X's eB								Rounded NOEC's	%
MDL** with $LTA_{a,c}$	6.518948387	TU_c	NOEC =	15.339897	(Protects from acute/chronic toxicity)					NOEC =	16 %
MDL** with LTA_c	56.74685174	TU_c	NOEC =	1.762212	(Protects from chronic toxicity)					NOEC =	2 %
AML with lowest LTA	6.518948387	TU_c	NOEC =	15.339897	Lowest LTA X's eD					NOEC =	16
IF ONLY ACUTE ENDPOINT/LIMIT IS NEEDED, CONVERT MDL FROM TU_c to TU_a											
										Rounded LC50's	%
MDL with $LTA_{a,c}$	0.651894839	TU_a	LC50 =	153.398975	%		Use NOAEC=100%			LC50 =	NA %
MDL with LTA_c	5.674685174	TU_a	LC50 =	17.622123	%					LC50 =	18

CHRONIC DILUTION SERIES TO RECOMMEND

	Monitoring % Effluent	TUc	Limit % Effluent	TUc
Dilution series based on data mean	38	2.678927		
Dilution series to use for limit			16	6.25
Dilution factor to recommend:	0.6164414		0.4	
Dilution series to recommend:	100.0	1.00	100.0	1.00
	61.6	1.62	40.0	2.50
	38.0	2.63	16.0	6.25
	23.4	4.27	6.4	15.63
	14.4	6.93	2.6	39.06
Extra dilutions if needed	8.90	11.23	1.02	97.66
	5.49	18.22	0.41	244.14

Table 7
WETLim10.xls Spreadsheet – Outfall 002 - Final Configuration

Spreadsheet for determination of WET test endpoints or WET limits

Excel 97				Acute Endpoint/Permit Limit			Use as LC_{50} in Special Condition, as TUa on DMR				
Revision Date: 12/13/13											
File: WETLIM10.xls				ACUTE	1.21101793	TUa	LC_{50} =	83	% Use as	1.20	TUa
(MIX.EXE required also)											
				ACUTE WLAa		1.2110179	Note: Inform the permittee that if the mean of the data exceeds				
							this TUa:	1.0	a limit may result using STATS.EXE		
				Chronic Endpoint/Permit Limit			Use as NOEC in Special Condition, as TUc on DMR				
				CHRONIC	12.1101793	TU_c	NOEC =	9	% Use as	11.11	TU_c
				BOTH*	12.1101793	TU_c	NOEC =	9	% Use as	11.11	TU_c
Enter data in the cells with blue type:				AML	12.1101793	TU_c	NOEC =	9	% Use as	11.11	TU_c
Entry Date:	10/16/15			ACUTE WLAa,c		12.110179		Note: Inform the permittee that if the mean			
Facility Name:	Dominion Bremo			CHRONIC WLAc		95.6122297		of the data exceeds this TUc:		4.97661363	
VPDES Number:	VA0004138			* Both means acute expressed as chronic				a limit may result using STATS.EXE			
Outfall Number:	002 Final configuration										
				% Flow to be used from MIX.EXE				Diffuser /modeling study?			
Plant Flow:	4.2912	MGD						Enter Y/N	n		
Acute 1Q10:	358	MGD		3.64	%			Acute	1	:1	
Chronic 7Q10:	406	MGD		100	%			Chronic	1	:1	
Are data available to calculate CV? (Y/N)				N	(Minimum of 10 data points, same species, needed)					Go to Page 2	
Are data available to calculate ACR? (Y/N)				N	(NOEC<LC50, do not use greater/less than data)					Go to Page 3	
IWC_a	24.77254884	%	Plant flow/plant flow + 1Q10				NOTE: If the IWCa is >33%, specify the				
IWC_c	1.045891308	%	Plant flow/plant flow + 7Q10				NOAEC = 100% test/endpoint for use				
Dilution, acute	4.036726324		100/IWCa								
Dilution, chronic	95.61222968		100/IWCc								
WLA_a	1.211017897	Instream criterion (0.3 TUa) X's Dilution, acute									
WLA_c	95.61222968	Instream criterion (1.0 TUc) X's Dilution, chronic									
$WLA_{a,c}$	12.11017897	ACR X's WLA_a - converts acute WLA to chronic units									
ACR -acute/chronic ratio	10	LC50/NOEC (Default is 10 - if data are available, use tables Page 3)									
CV-Coefficient of variatior	0.6	Default of 0.6 - if data are available, use tables Page 2)									
Constants eA	0.4109447	Default = 0.41									
eB	0.6010373	Default = 0.60									
eC	2.4334175	Default = 2.43									
eD	2.4334175	Default = 2.43 (1 samp)		No. of samples		1	**The Maximum Daily Limit is calculated from the lowest				
							LTA, X's eC. The LTAa,c and MDL using it are driven by the ACR.				
$LTA_{a,c}$	4.976613864	WLAa,c X's eA									
LTA_c	57.46651637	WLAc X's eB								Rounded NOEC's	%
MDL** with $LTA_{a,c}$	12.11017927	TU_c	NOEC =	8.257516	(Protects from acute/chronic toxicity)					NOEC = 9	%
MDL** with LTA_c	139.8400266	TU_c	NOEC =	0.715103	(Protects from chronic toxicity)					NOEC = 1	%
AML with lowest LTA	12.11017927	TU_c	NOEC =	8.257516	Lowest LTA X's eD					NOEC = 9	
IF ONLY ACUTE ENDPOINT/LIMIT IS NEEDED, CONVERT MDL FROM TU_c to TU_a											
										Rounded LC50's	%
MDL with $LTA_{a,c}$	1.211017927	TU_a	LC50 =	82.575161	%					LC50 = 83	%
MDL with LTA_c	13.98400266	TU_a	LC50 =	7.151028	%					LC50 = 8	

CHRONIC DILUTION SERIES TO RECOMMEND				
	Monitoring		Limit	
	% Effluent	TUc	% Effluent	TUc
Dilution series based on data mean	21	4.976614		
Dilution series to use for limit			9	11.11
Dilution factor to recommend:	0.458257569		0.3	
Dilution series to recommend:	100.0	1.00	100.0	1.00
	45.8	2.18	30.0	3.33
	21.0	4.76	9.0	11.11
	9.6	10.39	2.7	37.04
	4.4	22.68	0.8	123.46
Extra dilutions if needed	2.02	49.48	0.24	411.52
	0.93	107.98	0.07	1371.74

Table 8
Stat.exe Results

Chemical = Chronic WET, Outfall 002 C. dubia

Chronic averaging period = 4
WLAa,c = 11.2961409
WLAc = 91.6506339
Q.L. = 1.0
# samples/mo. = 1
# samples/wk. = 1

Summary of Statistics:

observations = 8
Expected Value = 1.40125
Variance = .706860
C.V. = 0.6
97th percentile daily values = 3.40982
97th percentile 4 day average = 2.33138
97th percentile 30 day average= 1.68998
< Q.L. = 0
Model used = BPJ Assumptions, type 2 data

No Limit is required for this material

The data are: 1.54, 1, 1.67, 1, 1.67, 1.67
1.66, 1

APPENDIX K

GROUNDWATER MONITORING PLAN EVALUATION

EPA published a Final Rule for the Disposal of Coal Combustion Residuals (CCR) from Electric Utilities on April 17, 2015. The rule established technical requirements for CCR landfills and surface impoundments under Subtitle D of the Resource Conservation and Recovery Act (RCRA). These regulations address the management and disposal of coal ash including stability, groundwater monitoring, and fugitive dust emissions. Adoption of the federal regulations into the Virginia Solid Waste Management Regulations is anticipated in late 2015.

CCR Surface Impoundments have been regulated under the VPDES program during their operational life. The Virginia Solid Waste Management Regulations (VSWMR) applies after their operational life and provides for closure requirements in 9VAC20-81-370. Their long-term management which includes closure, post-closure, and groundwater monitoring will be addressed by the solid waste program in accordance with the VSWMR and requirements under the EPA rule as applicable. Existing groundwater monitoring, corrective action and/or risk assessment plans currently in effect under the VPDES permit will remain in effect until such time that they are superseded by a groundwater monitoring program pursuant to a solid waste permit for closure and/or post-closure in accordance with the Virginia Solid Waste Management Regulations (9VAC20-81-10 *et. seq.*).

The chronology below is a summary of the Groundwater Monitoring Plan (GWMP) as it currently stands under the VPDES permit. All documents are contained in the DEQ files. This GWMP will remain in effect until it is superseded by a groundwater monitoring program pursuant to a solid waste permit. The permit contains a special condition regarding the transition from the VPDES Permit to a Solid Waste Permit.

1. The original GWMP was initiated in conjunction with the construction of the North Ash Pond in 1984. The GWMP included monitoring of upgradient and downgradient wells for Selenium, Iron, Barium, Magnesium, Manganese, Sulfate and Total Dissolved Solids once per permit term.

2. The VPDES Permit was reissued on August 13, 2010 and Part I.C of the permit required submittal of a revised GWMP by August 13, 2011. It was required that the GWMP address all active and closed impoundments and ponds at the site.

3. The GWMP was received on August 12, 2011. Rather than the technical review being completed in the Water Permitting Division, the technical review of the GWMP was provided by the DEQ Land Protection and Revitalization Division.

4. Comments on the GWMP were provided to Dominion in a DEQ 1st Technical Review memo dated February 10, 2012.

5. An updated GWMP was submitted on May 10, 2012.

6. Comments on the GWMP were provided to Dominion in a DEQ 2nd Technical Review memo dated August 21, 2012.

7. A Groundwater Monitoring Program, Well Installation Report dated March 6, 2013 was received as required by the GWMP.

8. DEQ approved the disposal of Well Development and Purge Water on March 18, 2013. The well development water and purge water was proposed to be directed to the Metal Cleaning Pond which discharges through internal Outfall 202 to the West Ash Pond.

9. Upon review of the well installation report in an email on March 27, 2013, DEQ requested the submittal of a revised GWMP.
10. An updated GWMP was submitted on July 2, 2013.

11. Comments on the GWMP were provided to Dominion in a DEQ 3rd Technical Review memo dated September 6, 2013.

12. DEQ approved the GWMP on September 11, 2013.

    The excerpt below from the GWMP shows the parameters that are monitored and describes the process for determining the monitoring frequency. Figure 1 shows the locations of the 14 groundwater monitoring wells.

    4.1 Parameter Selection

    The following analytical parameters shall be included for groundwater samples collected from monitoring wells during each sampling event at the site.

    Table D – Groundwater Sampling Parameters

Dissolved Metals	Arsenic, barium, cadmium, chromium, hexavalent chromium, copper, iron, lead, manganese, mercury, molybdenum, selenium, silver, vanadium, zinc
Water Quality Parameters	Ammonia, chloride, nitrate, sulfate, TDS, total hardness
Field Measurements	Conductivity, turbidity, groundwater elevation, pH, temperature and sample time

    4.2 Sampling Frequency

    In accordance with the DEQ guidelines, the sampling frequency at the site will generally be on a quarterly basis for the first two years of acquired monitoring data for a total of eight sampling events. After approximately two years of monitoring, an assessment of the acquired monitoring data will be performed to evaluate future monitoring frequency. A monitoring frequency of no less than once per year shall be maintained for the site. Please note that if statistical analysis is triggered, sampling frequencies may be modified to collect sufficient data for the statistical analysis. Changes to sampling parameters or monitoring frequency will be approved by the VDEQ prior to implementation.

13. Under the approved GWMP, Dominion began collecting quarterly background groundwater samples for background data collection in 2013. Groundwater monitoring was performed quarterly over a 2-year period. The results were submitted with the VPDES permit application due January 27, 2015.

14. The results of the 2-year background monitoring study were received on January 15, 2015 with the permit application.

    The conclusions of the report stated:

    "In accordance with the VPDES permit, A Corrective Action Plan will be submitted to DEQ within 90 days of submittal of this report based on data that suggests groundwater quality at the site is influenced by the presence of the ash ponds."

15. The VPDES permit requires the submittal of an annual groundwater report. Groundwater monitoring activities performed during the 2014 calendar year consisted of background data collection. Since the background data was submitted with the VPDES permit application, it was clarified by DEQ an email dated February 25, 2015 that the first annual groundwater report will be due by March 1, 2016.

16. A Corrective Action Plan (CAP) was submitted by letter dated April 14, 2015. The results of a risk assessment, which will evaluate human health and ecological risks related to groundwater at the East Ash Pond was to be submitted to DEQ by June 30, 2015.

17. A letter dated June 22, 2015 was received from Cathy Taylor, Director, Electric Environmental Services, regarding a portion of the risk assessment related to the East Ash Pond drainage feature (Outfall 003). The evaluation determined that a portion of the water may be groundwater seepage that may come into contact with coal ash constituents within the inactive East Ash Pond. Chemical analyses of the water collected from various locations within the drainage showed compliance with applicable water quality standards, and the risk assessment confirmed that there are no risks to human health or the environment.

18. An email was received on June 30, 2015 requesting an extension until July 10, 2015 for submittal of the risk assessment report. The risk assessment report due date has not yet been established as the Corrective Action Plan has not yet been approved by DEQ; therefore, the 10 day extension for submittal of the risk assessment report was approved.

19. The risk assessment report was received on July 10, 2015. The report is currently under review by the DEQ Division of Land Protection and Revitalization. The risk assessment will be incorporated into a comprehensive Correction Action Plan which will be submitted to DEQ for approval.

20. 40 CFR Parts 257 and 261 regarding the Disposal of Coal Combustion Residuals from Electric Utilities became effective on October 14, 2015. The rule included new requirements for groundwater for coal ash impoundments.

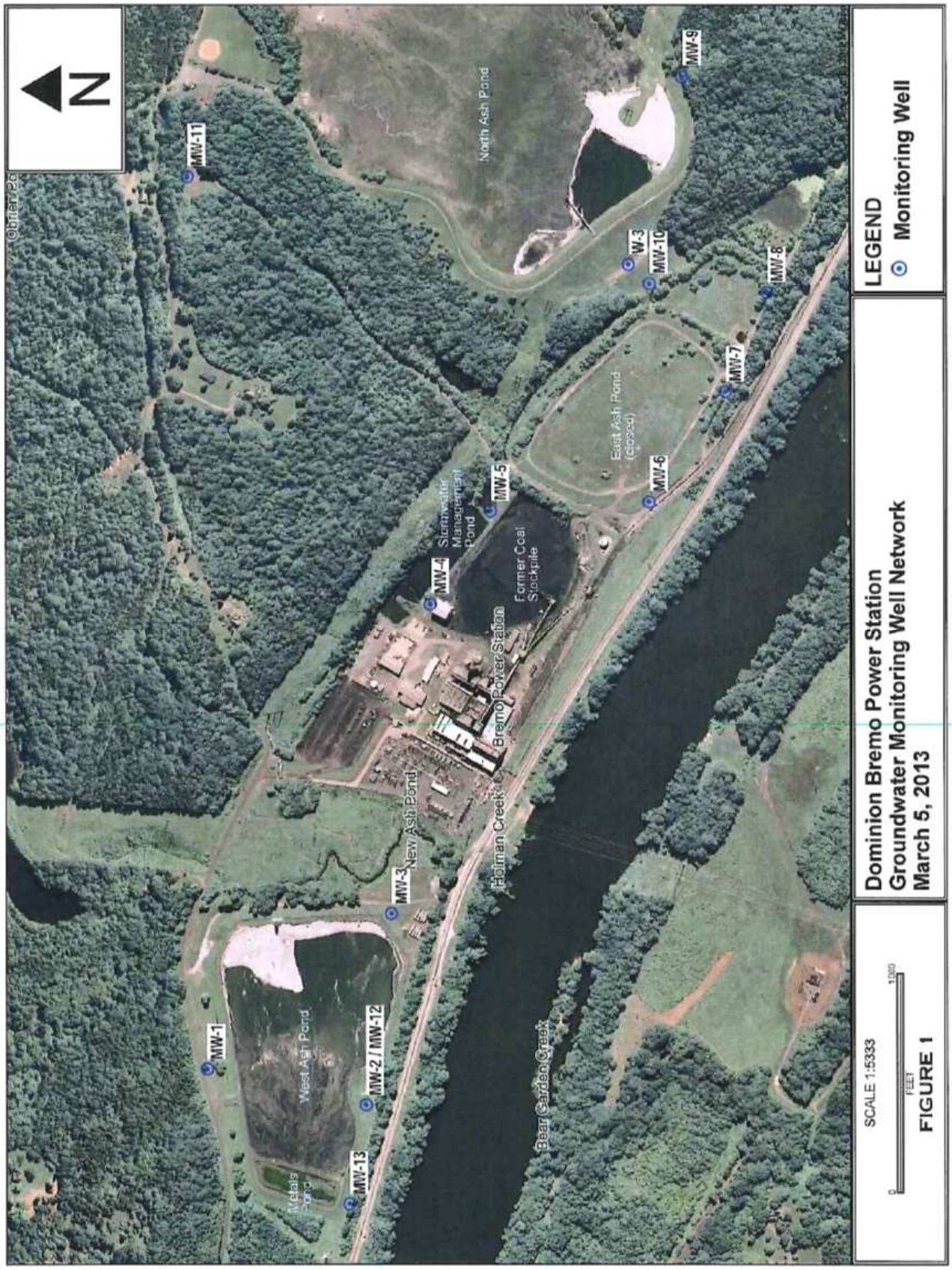
N
MW-11
MW-1
Metals Pond
West Ash Pond
MW-2 / MW-12
MW-13
MW-3
New Ash Pond
Holman Creek
Bremo Power Station
MW-4
Stormwater Management Pond
MW-5
Former Coal Stockpile
Bear Garden Creek
East Ash Pond (closed)
MW-6
MW-7
MW-8
W-3
MW-10
North Ash Pond
MW-9
LEGEND
Monitoring Well
Dominion Bremo Power Station
Groundwater Monitoring Well Network
March 5, 2013
SCALE 1:5333
0
1000
FEET
FIGURE 1

APPENDIX L

BASES FOR SPECIAL CONDITIONS AND PERMIT CHANGES

Tabulated below are the sections of the permit, with any changes and the reasons for the changes identified. Also provided is the basis for each of the permit special conditions.

Cover Page	• Content and format as prescribed by the VPDES Permit Manual. • The list of outfalls was added.
Part I.A.1	**Effluent Limitations and Monitoring Requirements – Outfall 001 (Once-Through Condenser Cooling Water):** Bases for effluent limits and monitoring requirements provided in previous pages of this fact sheet. *Updates Part I.A.1 of the previous permit with the following*: • The flow monitoring frequency was changed from 1/Month to 1/Day. • Heat Rejected was changed to Heat Rejection. • The footnote changed to show the permit limits were calculated based on a flow of 157.6 MGD rather than a flow of 172.8 MGD. • Effluent temperature and intake temperature monitoring were added. • Monthly average TRC limits were added. • Maximum TRC limits were changed from 0.20 mg/L to 0.02 mg/L.
Part I.A.2	**Effluent Limitations and Monitoring Requirements – Outfall 101 (Traveling Screen Backwash):** Bases for effluent limits and monitoring requirements provided in previous pages of this fact sheet. *Updates Part I.A.4 of the previous permit with the following*: • Outfall 101 was separated from Outfalls 003 and 006 on the permit pages. The permit language was updated to reflect this. • Changed the description of Outfall 101 from "intake screen backwash" to "traveling screen backwash" to distinguish between the two screens.
Part I.A.3	**Effluent Limitations and Monitoring Requirements – Outfall 203 (Sewage Treatment Plant):** Bases for effluent limits and monitoring requirements provided in previous pages of this fact sheet. *Updates Part I.A.6 of the previous permit with the following*: • Permit limits were added for BOD_5, TSS, E. coli and pH. • TRC limits were removed and are now found in Part I.A.5 for Outfall 002 and Part I.A.7 for Outfall 004. • A footnote was added referring to the Part I.B disinfection requirements.
Part I.A.4	**Effluent Limitations and Monitoring Requirements – Outfall 202 (Metal Cleaning Waste Treatment Basin):** Bases for effluent limits and monitoring requirements provided in previous pages of this fact sheet. *Updates Part I.A.5 of the previous permit with the following*: • The monitoring frequency for all parameters was changed from 1/6 Months to 1/Month. • A footnote was added that Outfall 202 will be retired following the closure of the Metals Cleaning Waste Treatment Basin.

Part I.A.5	**Effluent Limitations and Monitoring Requirements – Outfall 002:** Bases for effluent limits and monitoring requirements provided in previous pages of this fact sheet. *Updates Part I.A.2 of the previous permit with the following*: • TRC limits were added. • Oil & Grease monitoring frequency was changed from 1/3 Months to 2/Month. • 1/Year monitoring was added for TKN, Nitrite-N + Nitrate-N, Total Nitrogen and Total Phosphorus. • A footnote was added that the limits are based on a flow of 4.2912 MGD. • A footnote was added that effluent from the Stormwater Management Pond may be discharged through Outfall 002. TRC limits and monitoring apply if effluent from the Stormwater Management Pond is discharged through Outfall 002. • A footnote was added that sampling may take place prior to commingling with treated process wastewater from internal Outfalls 501, 502, 503, 504 and 505. • A footnote was added that Total Nitrogen, which is the sum of TKN and Nitrite-N + Nitrate-N, shall be derived from the results of those tests.
Part I.A.6	**Effluent Limitations and Monitoring Requirements – Outfall 003:** Bases for effluent limits and monitoring requirements provided in previous pages of this fact sheet. *Updates Part I.A.4 of the previous permit with the following*: • Outfall 003 was separated from Outfalls 101 and 006 on the permit pages. The permit language was updated to reflect this. • A footnote was added that during the period prior to Part I.A.9 becoming effective, Outfall 003 shall contain only stormwater not associated with a regulated industrial activity where monitoring would be required. There shall be no discharge of process wastewater from Outfall 003 prior to Part I.A.9 becoming effective. • A footnote was added that during the dewatering activities when Part I.A.9 is effective, process wastewater from internal Outfalls 501, 502, 503, 504 and 505 may be discharged through Outfall 003. • A footnote was added that outfall 003 will be retired following the dewatering activities at the facility.
Part I.A.7	**Effluent Limitations and Monitoring Requirements – Outfall 004:** Bases for effluent limits and monitoring requirements provided in previous pages of this fact sheet. *Updates Part I.A.3 of the previous permit with the following*: • TRC limits were added. • The monitoring frequency for flow, pH, TSS and Oil and Grease was changed from 1/3 Months to 2/Month. • A footnote was added that the limits are based on a flow of 4.2912 MGD. • A footnote was added that effluent from the Stormwater Management Pond may be discharged thorough Outfall 004. TRC limits and monitoring apply if effluent from the Stormwater Management Pond is discharged through Outfall 004. • A footnote was added that sampling may take place prior to commingling with treated process wastewater from internal Outfalls 501, 502, 503, 504, and 505. • A footnote was added that during the dewatering activities when Part I.A.9 is effective, process wastewater from internal Outfalls 501, 502, 503, 504 and 505 may be discharged through Outfall 004. • A footnote was added that Outfall 004 will be retired following the dewatering activities at the facility.

Part I.A.8	**Effluent Limitations and Monitoring Requirements – Outfall 006:** Bases for effluent limits and monitoring requirements provided in previous pages of this fact sheet. *Updates Part I.A.4 of the previous permit with the following*: • Outfall 006 was separated from Outfalls 101 and 003 on the permit pages. The permit language was updated to reflect this. • A footnote was added that during the period prior to Part I.A.9 becoming effective, Outfall 006 shall contain only stormwater not associated with a regulated industrial activity where monitoring would be required. There shall be no discharge of process wastewater from Outfall 006 prior to Part I.A.9 becoming effective. • A footnote was added that during the dewatering activities when Part I.A.9 is effective, process wastewater from Outfalls 501, 502, 503, 504, and 505 may be discharged through Outfall 006. • A footnote was added that following dewatering activities, Outfall 006 shall contain only stormwater not associated with a regulated industrial activity where monitoring would be required. There shall be no discharge of process wastewater from Outfall 006 during this period.
Part I.A.9	**Effluent Limitations and Monitoring Requirements – Internal Outfalls 501, 502, 503, 504, and 505:** Bases for effluent limits and monitoring requirements provided in previous pages of this fact sheet. *New requirement.*
Part I.A.10	**Effluent Limitations and Monitoring Requirements – Outfall 999:** Bases for effluent limits and monitoring requirements provided in previous pages of this fact sheet. *New requirement.*
Part I.A.11	**Effluent Limitations and Monitoring Requirements – Outfall 007 and 008 (Stormwater not exposed to industrial activity) Final Configuration:** Bases for effluent limits and monitoring requirements provided in previous pages of this fact sheet. *New requirement.*
Part I.B	**Additional TRC and E. coli Limitations and Monitoring Requirements – Outfall 203:** *New requirement.* Required by Sewage Collection and Treatment (SCAT) Regulations, 9VAC25-790 and Water Quality Standards, 9VAC25-260-170, Bacteria; other waters. Also, 40 CFR 122.41(e) requires the permittee, at all times, to properly operate and maintain all facilities and systems of treatment in order to comply with the permit. This ensures proper operation of chlorination equipment to maintain adequate disinfection.
Part I.C	**Effluent Limitations and Monitoring Requirements – Additional Instructions:** *Updates Part I.B of the previous permit.* Authorized by VPDES Permit Regulation, 9VAC25-31-190 J 4 and 220 I. This condition is necessary when a maximum level of quantification and/or a specific analytical method is required in order to assess compliance with a permit limit or to compare effluent quality with a numeric criterion. The condition also establishes protocols for calculation of reported values.
Part I.D	**Groundwater Monitoring Plan:** *Updates Part I.C of the previous permit*. 9VAC25-280-20. Except where otherwise specified, ground water quality standards shall apply statewide and shall apply to all ground water occurring at and below the uppermost seasonal limits of the water table. In order to prevent the entry of pollutants into ground water occurring in any aquifer, a soil zone or alternate protective measure or device sufficient to preserve and protect present and anticipated uses of ground water shall be maintained at all times. 9VAC25-280-60 Groundwater criteria, although not mandatory, also provide guidance in preventing groundwater pollution. Also, State Water Control Law 62.1-44.21 authorizes the Board to request information needed to determine the discharge's impact on State waters. Groundwater monitoring for parameters of concern will indicate whether possible lagoon/pond seepage is resulting in violations to the State Water Control Board's Groundwater Standards.
Part I.E	**Whole Effluent Toxicity Requirements:** *Updates Part I.D of the previous permit*. VPDES Permit Regulation, 9VAC25-31-210 and 220.I, requires monitoring in the permit to provide for and assure compliance with all applicable requirements of the State Water Control Law and the Clean Water Act.

Part I.F	**Cooling Water Intake Structure Requirements**
Part I.F.1	**Interim 316(b) Best Technology Available (BTA):** *New requirement.* VPDES Permit Regulation 9VAC25-31-165.C requires existing facilities with cooling water intake structures to meet the requirements under §316(b) of the Clean Water Act (CWA) determined by the department on a case-by-case, best professional judgment basis. DEQ staff have determined the permitted facility to be subject to the §316(b) requirements because it is a point source that uses or proposes to use one or more cooling water intake structures that withdraws waters of the U.S. for cooling purposes. Federal regulations at 40 CFR §§125.98(b)(5) and (b)(6) mandate that for permits issued before July 14, 2018, for which an alternate schedule has been established for the submission of information required by 40 CFR §122.21(r), must include interim BTA requirements in the permit based on best professional judgment on a site-specific basis. This special condition outlines interim BTA practices to minimize impingement and entrainment (I&E) mortality and adverse impacts to aquatic organisms.
Part I.F.2	**Impingement and Entrainment Control Technology Preventative Maintenance:** *New requirement.* VPDES Permit Regulation 9VAC25-31-190.E requires the permittee, at all times, to properly operate and maintain all facilities and systems of treatment and control (and related appurtenances) which are installed or used by the permittee to achieve compliance with the conditions of the permit.
Part I.F.3	**Alternate Schedule for Submittal of 40 CFR §122.21(r) Information:** *New requirement.* VPDES Permit Regulation 9VAC25-31-165.C requires existing facilities with cooling water intake structures to meet the requirements under §316(b) of the Clean Water Act (CWA) determined by the department on a case-by-case, best professional judgment (BPJ) basis. Federal regulations at 40 CFR §125.95(a)(2) allow for owners or operators of a facility whose permit expires prior to July 14, 2018 to request the Director establish an alternate schedule for the submission of the information required in 40 CFR §122.21(r) when making application for this permit. If the owner or operator of the facility demonstrates that it could not develop the required information by the applicable date of submission, DEQ must establish an alternate schedule for the submission of the required information. DEQ staff received a written request from the permittee, with the permit application received January 15, 2015, requesting an alternate schedule (see Appendix E). Upon review of the request, DEQ staff determined the permittee successfully demonstrated the inability to reasonably develop the required information by their reissuance application due date, thereby qualifying for an alternate schedule to be established. Federal regulations at 40 CFR §125.98(a) requires the review, for completeness, of the materials submitted by the applicant under 40 CFR §122.21(r) at the time of any application for a subsequent permit. To facilitate a determination of a timely and complete reissuance application in compliance with Part II.M of this permit, the Alternate Schedule for this facility has been established to require submission of the 40 CFR §122.21(r) information to the DEQ-Valley Regional Office by no later than 270 days prior to the expiration date of this permit.

Part I.F.4	**Visual or Remote Inspections:** *New requirement.* VPDES Permit Regulation 9VAC25-31-210.A authorizes the Board to establish permit conditions to provide for and assure compliance with all applicable requirements of the law, the CWA and regulations. Federal regulations at 40 CFR §125.96(e) requires visual inspections or the employment of remote monitoring devices to be conducted at least weekly during the period any cooling water intake structure is in operation to ensure any technologies operated are maintained and operated to function as designed, including those installed to protect Federally-listed threatened or endangered species or designated critical habitat. 40 CFR §125.96 authorizes DEQ to establish monitoring requirements, and specific protocols, as appropriate. Provisions for inspection waivers, adverse weather conditions, and deficiency discoveries were developed, using as a foundation, comparable provisions found in the VPDES General Permit for Stormwater Discharges Associated with Industrial Activity, 9VAC25-151-70, Part I.A.2.e, A.3 and A.6.b.
Part I.F.5	**Annual Certification Statements:** *New requirement.* VPDES Permit Regulation 9VAC25-31-210.A authorizes the Board to establish permit conditions to provide for and assure compliance with all applicable requirements of the law, the CWA and regulations. Federal regulations at 40 CFR §125.97(c) requires the permittee to annually submit a certification statement signed by a responsible corporate officer reporting whether there have been substantial modifications to the operation at any unit at the facility that impacts cooling water withdrawals or operation of the cooling water intake structures, or if information contained in the previous year's annual certification remains pertinent.
Part I.F.6	**Measures to protect Federally-listed Threatened or Endangered Species, designated critical habitat, and fragile species or shellfish:** *New requirement.* VPDES Permit Regulation 9VAC25-31-330 authorizes the board to include conditions in the permit in response to advice submitted in writing to the DEQ from the U.S. Fish and Wildlife Service, the National Marine Fisheries Service, or any other state or federal agency with jurisdiction over fish, wildlife, or public health that the imposition of specified conditions are necessary to avoid substantial impairment of fish, shellfish, or wildlife resources and to the extent the board determines the conditions are necessary to carry out the provisions of the regulation, the law and of the CWA. In addition, VPDES Permit Regulation 9VAC25-31-165.C requires existing facilities with cooling water intake structures to meet requirements under section 316(b) of the Clean Water Act determined by the department on a case-by-case, best professional judgment (BPJ) basis. 40 CFR §§125.94(a)(1), 125.94(g), 125.96(g), and 125.97(g) authorize DEQ to establish additional control measures, monitoring, and reporting requirements in the permit designed to minimize incidental take, reduce or remove more than minor detrimental effects to Federally-listed threatened or endangered species or designated critical habitat, or avoid jeopardizing Federally-listed species or destroying or adversely modifying designated critical habitat (e.g. prey base). 40 CFR CFR §125.96(g) mandates that DEQ require monitoring associated with any additional measures designed to minimize incidental take, reduce or remove more than minor detrimental effects to Federally-listed threatened or endangered species or designated critical habitat, or avoid jeopardizing Federally-listed species or destroying or adversely modifying designated critical habitat (e.g. prey base) pursuant to 40 CFR §125.94(g). State Water Control Law §62.1-44.5.A.3 and VPDES Permit Regulation 9VAC25-31-50.A.2 prohibits the alteration of the physical, chemical or biological properties of State waters and making them detrimental to animal or aquatic life, except in compliance with a permit issued by the Board. In addition, VPDES Permit Regulation 9VAC25-31-190.E requires the permittee, at all times, to properly operate and maintain all facilities and systems of treatment and control (and related appurtenances) which are installed or used by the permittee to achieve compliance with the conditions of the permit.

	State Water Control Law §62.1-44.21 and VPDES Permit Regulation 9VAC25-31-190.H authorizes the Board to require owners to furnish plans, specifications, and other pertinent information as may be necessary to accomplish the purposes of the State Water Control Law. In addition, federal regulations at 40 CFR §125.94(g) and §125.97(e) authorize DEQ to establish additional permit monitoring and reporting requirements. Information provided by the permittee under this special condition may be used as a foundation to address other reporting requirements of 40 CFR §125.98(k). Federal regulations at 40CFR §125.94(c)(9) and 40 CFR §125.98(b)(8) requires owners or operators to comply with any additional measures to protect fragile species and shellfish. Further discussion regarding T&E can be found in the Fact Sheet Introduction, Appendix H and Appendix I.
Part I.F.7	**Federal Endangered Species Act Compliance:** *New requirement*. State Water Control Law §62.1-44.5.A.3 and VPDES Permit Regulation 9VAC25-31-50.A.2 prohibits the alteration of the physical, chemical or biological properties of State waters and making them detrimental to animal or aquatic life, except in compliance with a permit issued by the Board. In addition, VPDES Permit Regulation 9VAC25-31-210.A authorizes the Board to establish permit conditions to provide for and assure compliance with all applicable requirements of the law, the CWA and regulations. 40 CFR §125.98(j) stipulates that nothing in Subpart J of Part 125 of the Code of Federal Regulations authorizes the take, as defined at 16 U.S.C. 1532(19), of threatened or endangered species of fish or wildlife. Such take is prohibited under the Endangered Species Act unless it is exempted pursuant to 16 U.S.C 1536(o) or permitted pursuant to 16 U.S.C 1539(a). Absent such exemption or permit, any facility must not take threatened or endangered species. 40 CFR §125.98(b)(1) requires all NPDES permits for facilities subject to §316(b) of the Clean Water Act to include as a permit condition the specific language of this special condition.
Part I.G	**Other Requirements and Special Conditions**
Part I.G.1	**95% Capacity Reopener (Outfall 203):** *Updates Part I.E.1 of the previous permit*. Clarifies that the requirement applies to Internal Outfall 203 for the sewage treatment plant. Required by VPDES Permit Regulation, 9VAC25-31-200.B.4 for certain permits.
Part I.G.2	**Materials Handling/Storage:** *Updates Part I.E.2 of the previous permit.* 9VAC25-31-280.B.2. requires that the types and quantities of "wastes, fluids, or pollutants which are … treated, stored, etc." be addressed for all permitted facilities.
Part I.G.3	**O&M Manual Requirement:** *Updates Part I.E.3 of the previous permit.* Code of Virginia at 62.1-44.16, VPDES Permit Regulation 9VAC25-31-190.E, and 40 CFR 122.41(e) require proper operation and maintenance of the permitted facility.
Part I.G.4	**CTC/CTO Requirement (Outfall 203):** *Identical to Part I.E.14 of the previous permit.* Required by Code of Virginia 62.1-44.19, SCAT Regulations 9VAC25-790, and VPDES Permit Regulation 9VAC25-31-190.E for all STPs
Part I.G.5	**Concept Engineering Report:** *New requirement*. Section 62.1-44.16 of the Code of Virginia requires industrial facilities to obtain DEQ approval for proposed discharges of industrial wastewater. A CER means a document setting forth preliminary concepts or basic information for the design of industrial wastewater treatment facilities and the supporting calculations for sizing the treatment operations.

Part I.G.6	**Sludge Management Plan (SMP) Requirement (Outfall 203):** *Updates Part I.E.4 of the previous permit.* VPDES Permit Regulation 9VAC25-31-100.P, 220.B.2, and 420 through 720, and 40 CFR Part 503 require all treatment works treating domestic sewage to submit information on their sludge use and disposal practices and to meet specified standards for sludge use and disposal. Technical requirements are derived from the Virginia Pollution Abatement Permit Regulation (9VAC25-32-10 *et seq.*)
Part I.G.7	**Reliability Class (Outfall 203):** *New requirement*. Required by Sewage Collection and Treatment (SCAT) Regulations 9VAC25-790 for all municipal facilities. Class II status recommended by VDH for this facility on June 3, 2015.
Part I.G.8	**Debris Collected on Intake Trash Racks:** *Identical to Part I.E.5 of the previous permit.* Specifies that materials removed from the intake screen not be returned to the river.
Part I.G.9	**Discharges of PCBs:** *Updates Part I.E.6 of the previous permit.* The two previous permits specified no discharge of transformer fluids in amounts equal to or greater than detected by EPA Test Methods specified in the Federal register 40 CFR 136, Guidelines For Establishing Test Procedures for the Analysis for pollutants. Prohibition of discharge for facilities subject to the Federal ELGs for Steam Electric Power Generating Point Source Category (40 CFR Part 423).
Part I.G.10	**Discharges of Chlorine:** *Updates Part I.E.7 of the previous permit.* Special conditions and additional restrictions to the discharge of chlorine when chlorination practices are employed. Conditions and restrictions for facilities subject to the Federal ELGs for Steam Electric Power Generating Point Source Category (40 CFR Part 423) and Best Professional Judgment.
Part I.G.11	**Oil Storage Groundwater Monitoring Reopener:** *Identical to Part I.E.12 of the previous permit.* Most facilities with large oil storage tanks, above or under ground, are required to monitor ground water under the Oil Discharge Contingency Plans and Administrative Fees for Approval Regulation, 9VAC25-90-10 et seq. Where potential exists for groundwater pollution and that regulation does not require monitoring, the VPDES permit may under Code of Virginia at 62.1-44.21.
Part I.G.12	**Thermal Mixing Zone:** *Identical to Part I.E.8 of the previous permit.* Continues the designation of the previously approved thermal mixing zone for discharges from Outfall 001.
Part I.G.13	**Instream Monitoring:** *Updates Part I.E.9 of the previous permit.* Continues the requirement for the permittee to conduct a previously approved monitoring plan. State Water Control Law at 62.1-44.21 authorizes the Board to request information needed to determine the discharge's impact on State waters.
Part I.G.14	**Water Quality Criteria Monitoring:** *New requirement*. State Water Control Law Section 62.1-44.21 authorizes the Board to request information needed to determine the discharge's impact on State waters. States are required to review data on discharges to identify actual or potential toxicity problems, or the attainment of water quality goals, according to 40 CFR Part 131, Water Quality Standards, Subpart 131.11. To ensure that water quality standards are maintained, the permittee is required to analyze the facility's effluent for the substances noted in Attachments A, B and C of this VPDES permit.
Part I.G.15	**Treatment Works Closure Plan:** *New requirement.* This condition establishes the requirement to submit a closure plan for the treatment works if the treatment facility is being replaced or is expected to close. This is necessary to ensure industrial sites and treatment works are properly closed so that the risk of untreated waste water discharge, spills, leaks and exposure to raw materials is eliminated and water quality maintained. Section 62.1-44.21 requires every owner to furnish when requested plans, specification, and other pertinent information as may be necessary to determine the effect of the wastes from his discharge on the quality of state waters, or such other information as may be necessary to accomplish the purposes of the State Water Control Law.

Part I.G.16	**Reopeners:** a. *Identical to Part I.E.10.a of the previous permit*. Section 303(d) of the Clean Water Act requires that total maximum daily loads (TMDLs) be developed for streams listed as impaired. This special condition is to allow the permit to be reopened if necessary to bring it into compliance with any applicable TMDL approved for the receiving stream. The reopener recognizes that, according to section 402(o)(1) of the Clean Water Act, limits and/or conditions may be either more or less stringent than those contained in this permit. Specifically, they can be relaxed if they are the result of a TMDL, basin plan, or other wasteload allocation prepared under section 303 of the Act. b. *Updates Part I.E.10.b of the previous permit:* 9VAC25-31-390 A authorizes DEQ to modify VPDES permits to promulgate amended water quality standards. c. *Identical to Part I.E.10.c of the previous permit.* Required by the VPDES Permit Regulation, 9VAC25-31-220.C, for all permits issued to STPs.
Part I.G.17	**Notification Levels:** *Identical to Part I.E.11 of the previous permit.* Required by the VPDES Permit Regulation 9VAC25-31-200.A for all manufacturing, commercial, mining, and silvicultural dischargers.
Part I.G.18	**Ash Pond Closure Stormwater Management:** *New requirement.* The State Water Control Law 62.1-44.21 authorizes the Board to request information needed to determine the discharge's impact on State waters.
Part I.G.19	**Metal Cleaning Waste Treatment Basin Decanting/Dewatering:** *New requirement*. The State Water Control Law 62.1-44.21 authorizes the Board to request information needed to determine the discharge's impact on State waters.
Part I.G.20	**Notification of Milestones:** *New requirement.* The State Water Control Law 62.1-44.21 authorizes the Board to request information needed to determine the discharge's impact on State waters.
Part I.G.21	**Cooling Water and Boiler Additives:** *New requirement*. Based on 9VAC25-196-70 for discharge of Noncontact Cooling Water when chemical additives are proposed for which the need for limits have not been evaluated.
Part I.H	**Stormwater Management Conditions**
Part I.H.1	**General Stormwater Special Conditions**: *Updates Part I.F.1 of the previous permit.* VPDES Permit Regulation 9VAC25-31-10 defines discharges of stormwater from industrial activity in 9 industrial categories. 9VAC25-31-120 requires a permit for these discharges. The Stormwater Pollution Prevention Plan requirements of the permit are derived from the VPDES general permit for discharges of stormwater associated with industrial activity, 9VAC25-151-10 et seq. VPDES Permit Regulation, 9VAC25-31-220.K, requires use of best management practices where applicable to control or abate the discharge of pollutants when numeric effluent limits are infeasible or the practices are necessary to achieve effluent limit or to carry out the purpose and intent of the Clean Water Act and State Water Control Law.
Part I.H.2	**Stormwater Pollution Prevention Plan (SWPPP)**: *Updates Part I.F.2 of the previous permit*. See rationale listed above for the General Stormwater Special Conditions.
Part I.H.3	**Sector-Specific Stormwater Pollution Prevention Plan Requirements**: Steam Electric Power Generating Facilities: *Updates Part I.F.3 of the previous permit*. See rationale listed above for the General Stormwater Special Conditions.

Attachment A and B Monitoring	**Water Quality Criteria Monitoring:** *New requirement.* State Water Control Law Section 62.1-44.21 authorizes the Board to request information needed to determine the discharge's impact on State waters. States are required to review data on discharges to identify actual or potential toxicity problems, or the attainment of water quality goals, according to 40 CFR Part 131, Water Quality Standards, Subpart 131.11. To ensure that water quality standards are maintained, the permittee is required to analyze the facility's effluent for the substances noted in Attachments A and B of this VPDES permit.
Part II	**Conditions Applicable To All VPDES Permits:** *Updates Part II of the previous permit.* VPDES Permit Regulation 9VAC25-31-190 requires all VPDES permits to contain or specifically cite the conditions listed.

Deletions from the permit:

Part I.A.7	Internal Outfall 204 – Stormwater Treatment Pond – Permit limits at Outfall 204 were included in the previous permit for coal pile runoff. The coal pile has been eliminated so Outfall 204 limits are no longer needed in the permit.