CALCULATIONS

Date:	June 12, 2014	**Made by:**	DPM
Project No.:	130-0193	**Checked by:**	ATN
Subject:	Leachate Pipe Capacity	**Reviewed by:**	JRD
Project Short Title:	**CHESAPEAKE ENERGY CENTER ASH LANDFILL – SWP #440**		

1.0 OBJECTIVE

The objective of this analysis is to evaluate the hydraulic performance of the proposed perforated leachate collection pipe and the solid conveyance leachate pipe for the Chesapeake Energy Center Ash Landfill (Facility). The hydraulic performance of the perforated leachate collection pipe will be based on a design basis flow of 2.67 gallons per minute (GPM) per contributing acre. This flow design value is three times the anticipated maximum flow as described in the "HELP Modeling" Calculations Package as prepared by Golder Associates, dated August 28, 2013. The capacity of the pipe to convey the maximum expected flow and the perforations necessary for the leachate to enter the pipe will be evaluated.

2.0 METHOD

For the pipe capacity, the analysis was performed using the Manning's equation for open channel flow as the pipe is flowing partially full under gravity flow conditions. The capacity of the perforations was analyzed using the orifice flow equation.

3.0 INPUTS AND ASSUMPTIONS

1. Peak daily leachate flow was modeled using a design basis flow of 2.67 GPM (0.0059 ft^3/second (CFS)) per contributing acre. The inner perforated pipes range in length from 226 to 400 feet; therefore, the contributing drainage area to the inner perforated pipes varies from 1.26 to 2.23 acres. The contributing drainage areas for the outer conveyance pipes also vary.

2. The leachate pipes (both solid and perforated) are 6" HDPE SDR-17, with an inner diameter of 5.84 inches. The inner perforated collection pipes will be placed at a minimum slope of 0.3% (1 ft in 300 ft) and the outer solid conveyance pipes will be placed at a slope of at least 0.5%.

4.0 PERFORATED PIPE CALCULATIONS

4.1 Perforated Pipe Capacity

The attached spreadsheets use the Manning's equation to calculate the flows and resulting flow depths and velocities. For the perforated pipe, the computed velocity in the pipe at the design flows of approximately 5.4 GPM is less than 1 ft/s, which is not high enough to be self-cleaning (> 2 ft/s); therefore, cleanouts will be established around the perimeter to facilitate pipe cleaning at regular intervals or when a decrease in flow in suspected. The 6" pipe has sufficient volumetric capacity, with the design

Golder, Golder Associates and the GA globe design are trademarks of Golder Associates Corporation

flow being less than 9% of the total capacity of the pipe (~ 180 GPM to 230 GPM) at the constructed slopes.

4.2 Perforations Required

Distributing the design flow (0.012 cfs) equally along the length of the perforated pipe (362 feet = total pipe length) yields an average flow distribution of 3.33 x 10^{-5} cfs/ft (0.015 GPM/ft) that must be let into the pipe through the perforations. Using the orifice flow equation and an assumed head of one inch, compute the capacity of one, ½" diameter perforation:

$$Q = C_d \times A \times \sqrt{2 \times g \times h} \quad \rightarrow \quad Q = 0.6 \times 0.00136 \times \sqrt{2 \times 32.2 \times .08333} = \mathbf{1.90 \times 10^{-3} cfs}$$

Where: Q = flow in cfs

Cd = orifice discharge coefficient, 0.6

A = orifice area, ft^2

g = gravitational constant, 32.2 ft/sec^2

h = hydraulic head, ft

The capacity of one orifice (1.90 x 10^{-3} cfs) is greater than the requirement for one linear foot of perforated pipe (3.33 x 10^{-5} cfs). The proposed perforation design has 4 holes per row around the circumference of the pipe, with one row per foot along the length of the pipe. This results in 4 perforations per linear foot of pipe and an approximate factor of safety of 228.

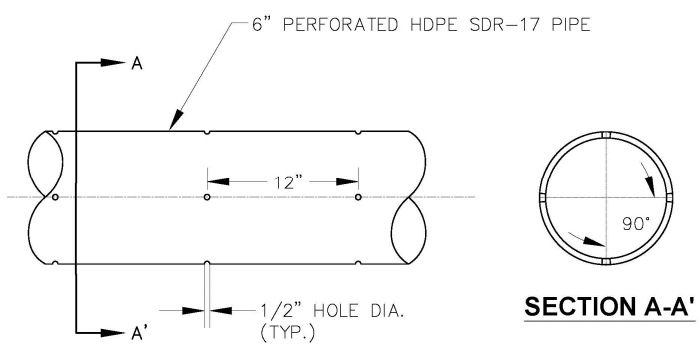

4.3 Perforation Size and Gravel Gradation

The pipe and its 1/2" (0.5") diameter perforations will be wrapped in a "burrito wrap" where the pipe is enveloped in VDOT #57 stone. The d_{50} gradation point of #57 stone is approximately 0.5" according to the VDOT Road and Bridge Specifications. The US Army Corps of Engineers Technical Letter ETL 1110-1-162 provides guidance on bedding stone size and perforation size for preventing infiltration of material into the perforated pipe:

$$\frac{50\%\ size\ of\ filter\ material}{hole\ diameter\ or\ slot\ width} \geq 1.0\ (holes)\ or\ \geq 1.2\ (slots)$$

In this case, the ratio of d_{50} to hole diameter is 1.0, which satisfies this criterion.

5.0 SOLID CONVEYANCE PIPE CALCULATIONS

5.1 Solid Pipe Capacity

The attached spreadsheets use the Manning's equation to calculate the flows and resulting flow depths and velocities. Based on the contributing drainage areas, the computed design flows (3x anticipated) in the solid conveyance pipe range from 7.8 to 20.6 GPM. The computed velocities in the pipe at these flows are 1.6 ft/s and lower, which is not high enough to be self-cleaning (> 2 ft/s). Cleanouts will be established around the perimeter to facilitate pipe cleaning at regular intervals or when a decrease in flow in suspected. The 6" pipe has sufficient volumetric capacity (~ 232 GPM), with the largest design flow being approximately 9% of the total capacity of the pipe at the constructed slope.

6.0 CONCLUSIONS

Based on the results of the calculations, the perforated leachate collection pipes and the solid conveyance pipes are designed to adequately collect and convey leachate to the discharge point under all anticipated operating conditions.

7.0 REFERENCES

1. CEC Ash Landfill HELP model calculations package prepared by Golder Associates Inc., August 2013.

2. CEC Ash Landfill Permit Amendment Drawings prepared by Golder Associates Inc., Project No. 130-0193.

3. U.S. Army Corps of Engineers ETL 1110-1-162 "Checklist for Hazardous Waste Landfill Cover Design", 30 September, 2001.

Calculation of flow in inner collection and outer conveyance pipes using HELP Model results and an applied factor of safety of 3.0 to compute design flows.

Peak daily flow from HELP Model:		0.04712	ac-in/day
	x	1/12	ft/in
	x	1/86,400	day/sec
	x	43,560	ft^2/ac
	=	0.002	CFS (per ac)
	=	0.888	GPM (per ac)

Perforated Collection Pipe Flows		21.5	Acres served by perforated pipe
	/	3,865	linear feet of collection pipe around inside toe
	=	0.005563	Ac/lf of collection pipe

Inside Pipes (Min/Max)

Area	Per acre flow, cfs	Contributing Acres	Pipe Length, ft	Slope, ft/ft	Q peak, cfs	(3x FS) Design Flow, cfs	(3x FS) Design flow, GPM
Min slope	0.002	2.014	362	0.003	0.0040	0.012	**5.4**
Max length	0.002	2.225	400	0.007	0.0045	0.013	**6.0**

Outside Pipes

Area	Per acre flow, cfs	Contributing Acres	Length, ft	Slope, ft/ft	Q peak, cfs	(3x FS) Design Flow, cfs	(3x FS) Design flow, GPM
1	0.002	2.94	722	0.005	0.006	0.017	**7.8**
to MH	0.002	3.04	N/A	N/A	0.006	0.018	**8.1**
2	0.002	7.71	1,318	0.005	0.015	0.046	**20.6**
3	0.002	4.12	491	0.005	0.008	0.024	**11.0**
4	0.002	3.70	87	0.03	0.007	0.022	**9.9**

MH in NE corner receives Area 1, to MH, and 2 flows: 7.8 + 8.1 + 20.6 = 36.5 GPM (3x actual)

Made By:
Checked:
Reviewed:

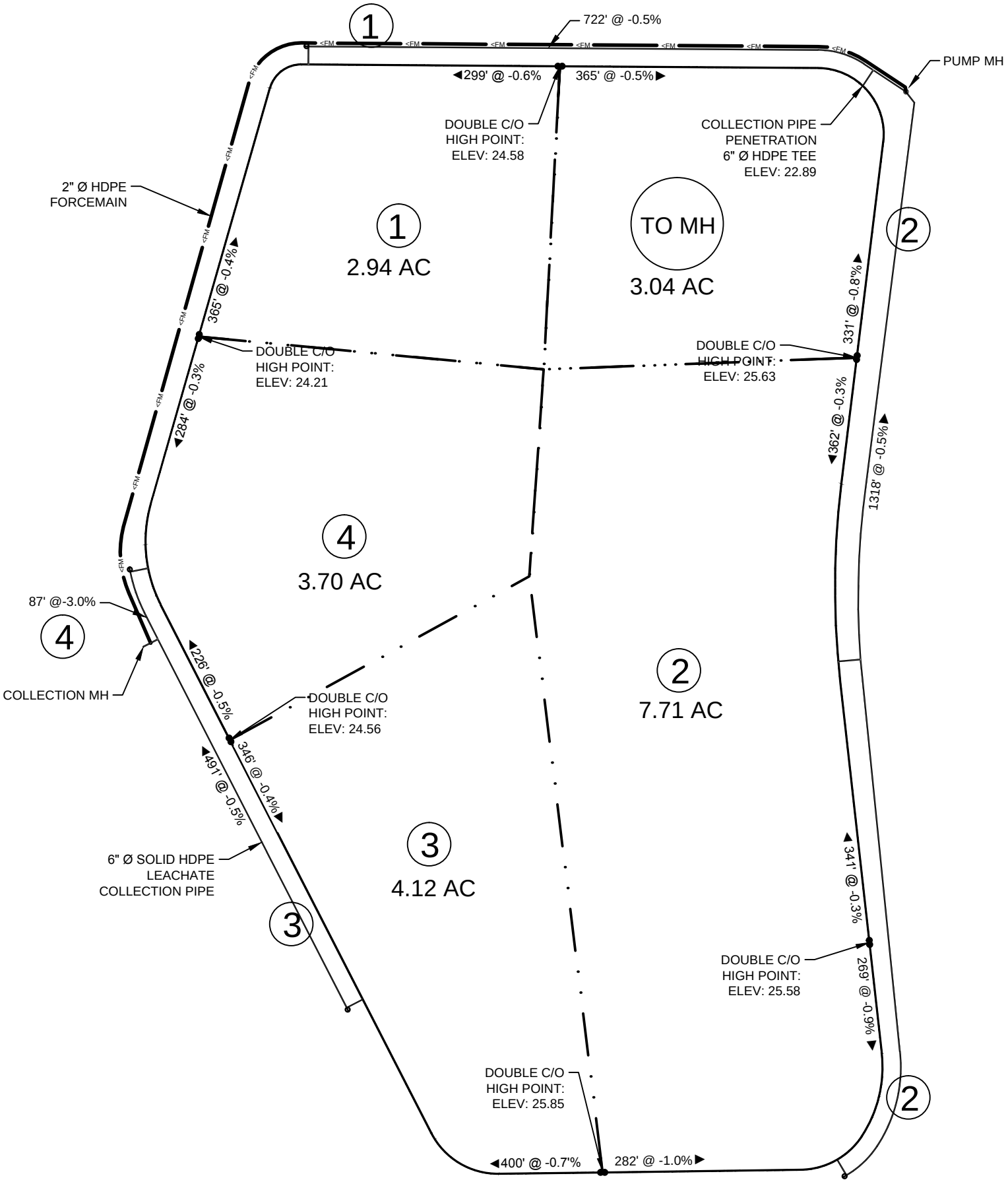
1
722' @ -0.5%
PUMP MH
299' @ -0.6%
365' @ -0.5%
DOUBLE C/O
HIGH POINT:
ELEV: 24.58
COLLECTION PIPE
PENETRATION
6" Ø HDPE TEE
ELEV: 22.89
2" Ø HDPE
FORCEMAIN
1
2.94 AC
TO MH
3.04 AC
2
365' @ -0.4%
331' @ -0.8%
DOUBLE C/O
HIGH POINT:
ELEV: 24.21
DOUBLE C/O
HIGH POINT:
ELEV: 25.63
284' @ -0.3%
362' @ -0.3%
1318' @ -0.5%
4
3.70 AC
87' @-3.0%
4
COLLECTION MH
226' @ -0.5%
DOUBLE C/O
HIGH POINT:
ELEV: 24.56
2
7.71 AC
346' @ -0.4%
491' @ -0.5%
6" Ø SOLID HDPE
LEACHATE
COLLECTION PIPE
3
4.12 AC
3
341' @ -0.3%
DOUBLE C/O
HIGH POINT:
ELEV: 25.58
269' @ -0.9%
DOUBLE C/O
HIGH POINT:
ELEV: 25.85
2
400' @ -0.7'%
282' @ -1.0%

Gravity Pipe Flow Worksheet

Project: CEC Ash Landfill Leachate Collection Pipe - Inside Pipe minimum slope
6" Leachate Pipe (6" SDR-17)
Date: November 21, 2013
By: DPM
Project #: 130-0193

$$Q = \frac{1.49}{n} A R^{2/3} S^{1/2}$$

Q = Flow, cfs
n = Mannings Coeff.
A = Flow Area
R = Hyd. Radius
S = Pipe Slope

Slope (ft/ft):	0.0030	ft/ft	Area Full	0.1860 ft^2
Mannings "n":	0.010		Max Capacity	0.4010 cfs
Pipe ID	5.84	inches		180.0 GPM

Circular Pipe Flow

Phase	Design Flow (cfs)	Design Flow (GPM)	Flow Depth (in)	Flow Velocity (ft/s)	% Full	% Capacity
Post-Closure	0.012	5.4	0.72	0.92	7.1%	3.0%

Circular Pipe Flow by Manning's Equation

Slope	0.003	Pipe Dia (ft)	0.4867
n	0.010		

Depth, ft	OE	Chord AE	Angle AOE	2xAOE	Triangle Area	Sector Area	Flow Area	Pw	r	V	Q
0.06	0.18	0.16	41.11	82.22	0.03	0.04	0.01	0.35	0.04	0.92	0.0121
0.2	0.04	0.24	79.74	159.48	0.01	0.08	0.07	0.68	0.11	1.83	0.1320
0.2433							0.09	0.76	0.12	2.00	0.1864
0.3440	0.10	0.22	65.56	131.13	0.02	0.07	0.14	0.97	0.14	2.25	0.3160
0.4565	0.21	0.12	28.84	57.67	0.03	0.03	0.18	1.28	0.14	2.21	0.4010

50% Full Capacity

Max Capacity at 93.8% Full

Made By:
Checked:
Reviewed:

Golder Associates Inc.

Gravity Pipe Flow Worksheet

Project: CEC Ash Landfill Leachate Collection Pipe - Inside Pipe maximum area
6" Leachate Pipe (6" SDR-17)
Date: November 21, 2013
By: DPM
Project #: 130-0193

$$Q = \frac{1.49}{n} A R^{2/3} S^{1/2}$$

Q = Flow, cfs
n = Mannings Coeff.
A = Flow Area
R = Hyd. Radius
S = Pipe Slope

Slope (ft/ft):	0.0070	ft/ft	Area Full	0.1860 ft^2
Mannings "n":	0.010		Max Capacity	0.6125 cfs
Pipe ID	5.84	inches		274.9 GPM

Circular Pipe Flow

Phase	Design Flow (cfs)	Design Flow (GPM)	Flow Depth (in)	Flow Velocity (ft/s)	% Full	% Capacity
Post-Closure	0.013	6.0	0.61	1.26	5.6%	2.2%

Circular Pipe Flow by Manning's Equation

Slope	0.007	Pipe Dia (ft)	0.4867
n	0.010		

Depth, ft	OE	Chord AE	Angle AOE	2xAOE	Triangle Area	Sector Area	Flow Area	Pw	r	V	Q
0.051	0.19	0.15	37.78	75.55	0.03	0.04	0.01	0.32	0.03	1.26	0.0131
0.2	0.04	0.24	79.74	159.48	0.01	0.08	0.07	0.68	0.11	2.80	0.2016
0.2433							0.09	0.76	0.12	3.06	0.2847
0.3440	0.10	0.22	65.56	131.13	0.02	0.07	0.14	0.97	0.14	3.43	0.4828
0.4565	0.21	0.12	28.84	57.67	0.03	0.03	0.18	1.28	0.14	3.38	0.6125

50% Full Capacity

Max Capacity at 93.8% Full

Made By:
Checked:
Reviewed:

Golder Associates Inc.

Gravity Pipe Flow Worksheet

Project: CEC Ash Landfill Leachate Collection Pipe - Outer Pipe - HDPE pipe
6" Leachate Pipe (6" SDR-17)
Date: November 21, 2013
By: DPM
Project #: 130-0193

$$Q = \frac{1.49}{n} A R^{2/3} S^{1/2}$$

Q = Flow, cfs
n = Mannings Coeff.
A = Flow Area
R = Hyd. Radius
S = Pipe Slope

Slope (ft/ft):	0.005	ft/ft	Area Full	0.1860	ft^2
Mannings "n":	0.010		Max Capacity	0.5176	cfs
Pipe ID	5.84	inches		232.3	GPM

Circular Pipe Flow

Phase	Design Flow (cfs)	Design Flow (GPM)	Flow Depth (in)	Flow Velocity (ft/s)	% Full	% Capacity
Post-Closure	0.046	20.6	1.22	1.64	15.2%	8.9%

Circular Pipe Flow by Manning's Equation

Slope	0.005	Pipe Dia (ft)	0.4867
n	0.010		

Depth, ft	OE	Chord AE	Angle AOE	2xAOE	Triangle Area	Sector Area	Flow Area	Pw	r	V	Q
0.102	0.14	0.20	54.49	108.98	0.03	0.06	0.03	0.46	0.06	1.64	0.0463
0.2	0.04	0.24	79.74	159.48	0.01	0.08	0.07	0.68	0.11	2.36	0.1704
0.2433							0.09	0.76	0.12	2.59	0.2406
0.3440	0.10	0.22	65.56	131.13	0.02	0.07	0.14	0.97	0.14	2.90	0.4080
0.4565	0.21	0.12	28.84	57.67	0.03	0.03	0.18	1.28	0.14	2.86	0.5176

50% Full Capacity

Max Capacity at 93.8% Full

Made By:
Checked:
Reviewed:

Golder Associates Inc.