NOTES:

1. PROPOSED PHASE 1 GRADING SHOWN IS INTENDED TO APPROXIMATE THE BOTTOM OF THE CCR, FOLLOWING MECHANICAL DREDGING. THE GRADES ARE BASED ON THE ORIGINAL 1955 DESIGN GRADES FROM THE CONSTRUCTION OF POND E AND ARE APPROXIMATE. ACTUAL PHASE 1 GRADES WILL VARY BASED ON FIELD CONDITIONS ENCOUNTERED DURING DREDGING OPERATIONS.
2. CONTRACTOR SHALL NOT PROCEED TO PHASE 2 UNTIL CCR REMOVAL IS APPROVED BY Q.C. TEAM.
3. CCR LOCATED WITHIN THE POND E "LIMITS OF CCR" WILL BE MECHANICALLY DREDGED AND HAULED AND PLACED WITHIN THE LIMITS OF POND D OR DISPOSED AT AN OFFSITE DISPOSAL FACILITY.
4. ALL STORMWATER COLLECTED IN POND E DURING MECHANICAL DREDGING OPERATIONS (PHASE I) WILL BE PUMPED TO POND D OR OTHER PERMITTED VPDES OUTFALL APPROVED BY OWNER'S REPRESENTATIVE.
5. MINIMUM OVERLAND SLOPE FOR CLOSURE SURFACE IS 1%.

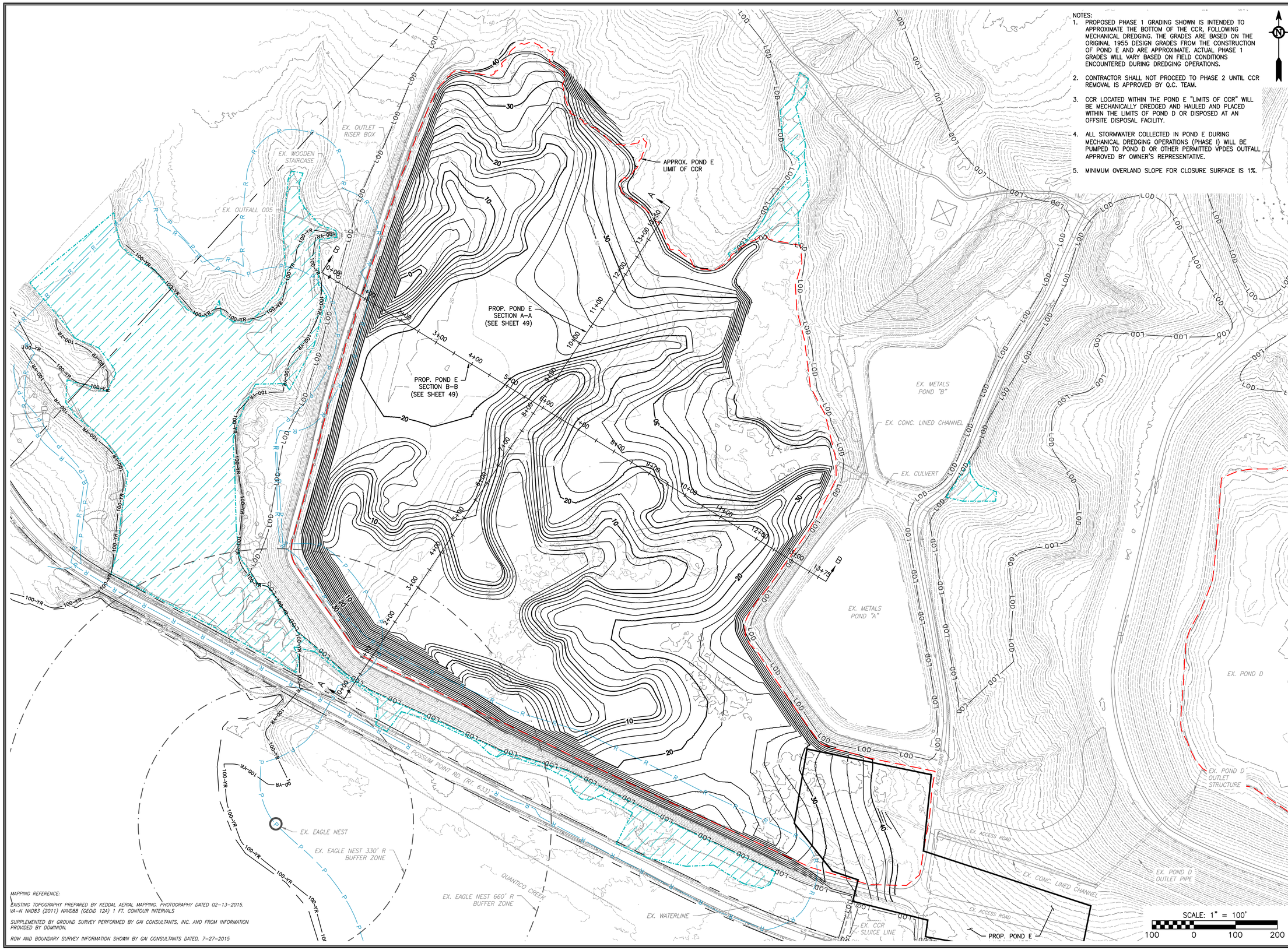

MAPPING REFERENCE:

EXISTING TOPOGRAPHY PREPARED BY KEDDAL AERIAL MAPPING. PHOTOGRAPHY DATED 02–13–2015. VA–N NAD83 (2011) NAVD88 (GEOID 12A) 1 FT. CONTOUR INTERVALS

SUPPLEMENTED BY GROUND SURVEY PERFORMED BY GAI CONSULTANTS, INC. AND FROM INFORMATION PROVIDED BY DOMINION.

ROW AND BOUNDARY SURVEY INFORMATION SHOWN BY GAI CONSULTANTS DATED, 7–27–2015

NO.:	DATE:	DWN:	CHK:	APV:	DESCRIPTION:

REVISION RECORD

This drawing was produced with computer aided drafting technology and is supported by electronic drawing files. Do not revise this drawing via manual drafting methods.

DRAWING TITLE
OVERALL PHASE 1 GRADING PLAN - POND E CLOSURE

CLIENT
VIRGINIA ELECTRIC AND POWER COMPANY
GLEN ALLEN, VA

PROJECT
POSSUM POINT POWER STATION
COAL COMBUSTION RESIDUAL SURFACE IMPOUNDMENT CLOSURES
DUMFRIES, VA

gai consultants

ISSUING OFFICE: Richmond | 4198 Cox Road, Suite 114, Glen Allen, VA 23060

GAI CAD FILE PATH: Z:\Energy\2015\C150132-00\ — PLOTTED BY: Michael Doyle — PLOT FILE: GAI.ctb

COMMONWEALTH OF VIRGINIA
JOHN R. KLAMUT
Lic. No. 048859
12/7/2015
PROFESSIONAL ENGINEER

DRAWN BY:	CHECKED BY:	APPROVED BY:
DOYLEMP	KINDEKW	KLAMUJR
DWG TYPE:	SCALE:	ISSUE DATE:
	AS SHOWN	12/7/2015

SHEET NO.: 37 OF 65

REVISION

GAI FILE NUMBER: C150132-00-000-C-D1-037

ALT./CLIENT DRAWING NUMBER:

GAI DRAWING NUMBER: 037

PERMIT

NOTES:

1. PROPOSED GRADING SHOWN IS BASED ON THE ORIGINAL 1955 DESIGN GRADES FROM THE CONSTRUCTION OF POND E AND IS APPROXIMATE. PROPOSED GRADING AND SOIL VOLUMES WILL BE UPDATED BY THE OWNER'S ENGINEER AFTER COMPLETION OF PHASE 1, BASED ON THE AS-BUILT GRADES OF PHASE 1.
2. MINIMUM OVERLAND SLOPE FOR PHASE 2 GRADE IS 1%.
3. ALL EROSION AND SEDIMENT CONTROLS SHALL BE INSTALLED AND FUNCTIONAL PRIOR TO ANY LAND DISTURBANCE OUTSIDE THE POND LIMITS.

SEE PHASE 2 GRADING PLAN ENLARGEMENT – POND E (SHEET 3 of 3)

SEE PHASE 2 GRADING PLAN ENLARGEMENT – POND E (SHEET 2 of 3)

SEE PHASE 2 GRADING PLAN ENLARGEMENT – POND E (SHEET 1 of 3)

EX. WOODEN STAIRCASE

EX. OUTLET RISER BOX

EX. OUTFALL 005

PROP. POND E SECTION A–A (SEE SHEET 49)

PROP. POND E SECTION B–B (SEE SHEET 49)

COMMON FILL (TYP.)

PROP. BASIN E–1

TOP OF POND

PROP. POND E ACCESS ROAD

EX. METALS POND "B"

EX. CONC. LINED CHANNEL

EX. CULVERT

EX. METALS POND "A"

EX. POND D

EX. POND D OUTLET STRUCTURE

EX. GRAVEL ACCESS ROAD

EX. CONC. LINED CHANNEL

EX. POND D OUTLET PIPE

POSSUM POINT RD. (RT. 633)

EX. EAGLE NEST

EX. EAGLE NEST 330' R BUFFER ZONE

EX. EAGLE NEST 660' R BUFFER ZONE

QUANTICO CREEK

EX. WATERLINE

EX. COAL CCR SLUICE LINE

PROP. POND E LAYDOWN AREA

SCALE: 1" = 100'

100 0 100 200

MAPPING REFERENCE:

EXISTING TOPOGRAPHY PREPARED BY KEDDAL AERIAL MAPPING. PHOTOGRAPHY DATED 02-13-2015. VA-N NAD83 (2011) NAVD88 (GEOID 12A) 1 FT. CONTOUR INTERVALS

SUPPLEMENTED BY GROUND SURVEY PERFORMED BY GAI CONSULTANTS, INC. AND FROM INFORMATION PROVIDED BY DOMINION.

ROW AND BOUNDARY SURVEY INFORMATION SHOWN BY GAI CONSULTANTS DATED, 7-27-2015

NO.:	DATE:	DWN:	CHK:	APV:	DESCRIPTION:

REVISION RECORD

This drawing was produced with computer aided drafting technology and is supported by electronic drawing files. Do not revise this drawing via manual drafting methods.

DRAWING TITLE

OVERALL PHASE 2 GRADING PLAN - POND E CLOSURE

PROJECT

POSSUM POINT POWER STATION
COAL COMBUSTION RESIDUAL
SURFACE IMPOUNDMENT
CLOSURES
DUMFRIES, VA

CLIENT

VIRGINIA ELECTRIC AND
POWER COMPANY
GLEN ALLEN, VA

gai consultants

ISSUING OFFICE: Richmond | 4198 Cox Road, Suite 114, Glen Allen, VA 23060

GAI CAD FILE PATH: Z:\Energy\2015\C150132.00 - PDM - Possum Point PS CCR\CAD\Production Drawings\C150132-00-000-C-D1-038.dwg PLOTTED ON: 11/17/2015 4:44:53 PM PLOTTED BY: Michael Doyle PLOT FILE: GAI.ctb

COMMONWEALTH OF VIRGINIA
JOHN R. KLAMUT
Lic. No. 048859
12/7/2015
PROFESSIONAL ENGINEER

DRAWN BY:	CHECKED BY:	APPROVED BY:
DOYLEMP	KINDEKW	KLAMUJR
DWG TYPE:	SCALE:	ISSUE DATE:
	AS SHOWN	12/7/2015

SHEET NO.: 38 OF 65

REVISION

GAI FILE NUMBER: C150132-00-000-C-D1-038

ALT./CLIENT DRAWING NUMBER:

GAI DRAWING NUMBER: 038

PERMIT

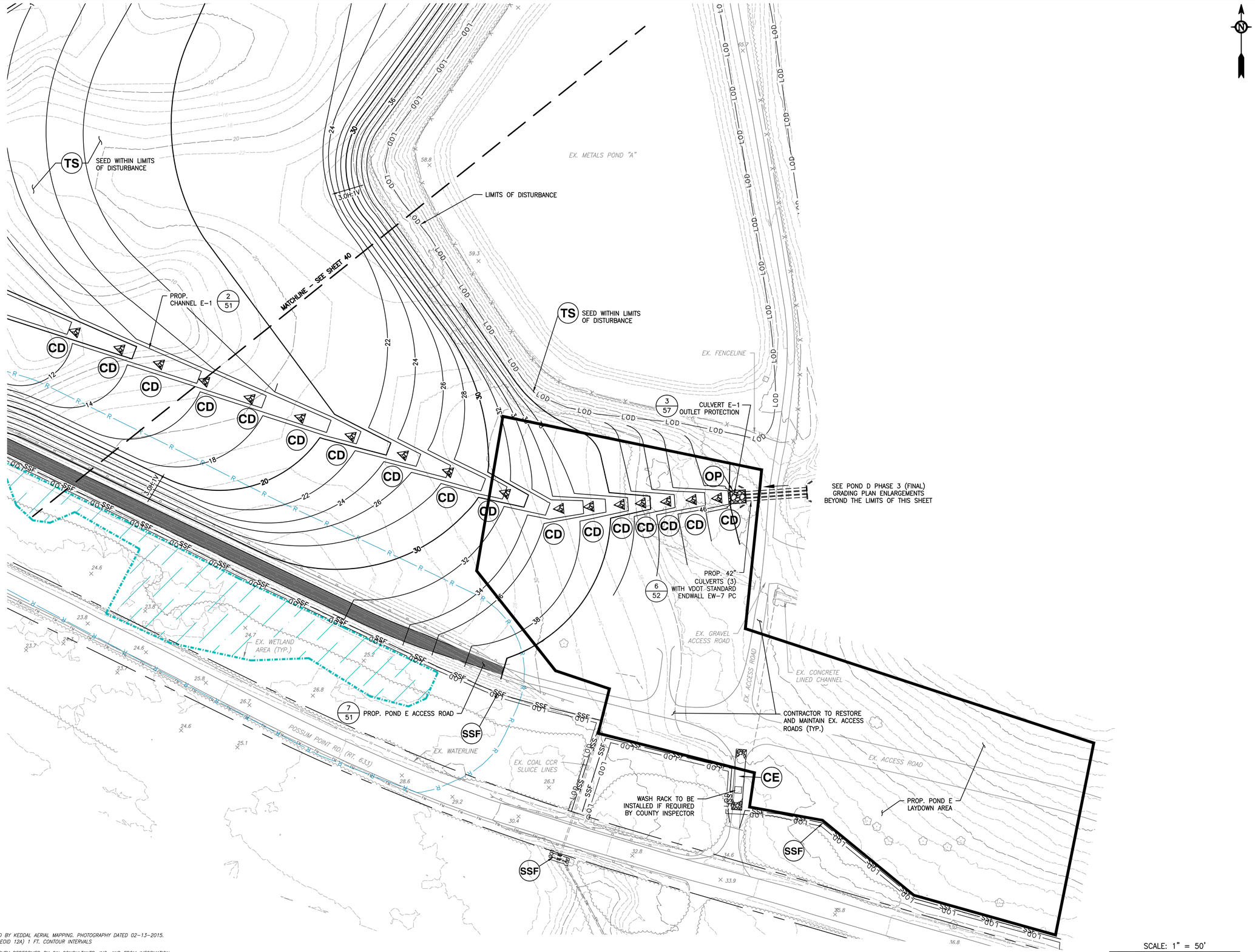

MAPPING REFERENCE:

EXISTING TOPOGRAPHY PREPARED BY KEDDAL AERIAL MAPPING. PHOTOGRAPHY DATED 02-13-2015. VA-N NAD83 (2011) NAVD88 (GEOID 12A) 1 FT. CONTOUR INTERVALS

SUPPLEMENTED BY GROUND SURVEY PERFORMED BY GAI CONSULTANTS, INC. AND FROM INFORMATION PROVIDED BY DOMINION.

ROW AND BOUNDARY SURVEY INFORMATION SHOWN BY GAI CONSULTANTS DATED, 7-27-2015

NO.:	DATE:	DWN:	CHK:	APV:	DESCRIPTION:

REVISION RECORD

This drawing was produced with computer aided drafting technology and is supported by electronic drawing files. Do not revise this drawing via manual drafting methods.

DRAWING TITLE

PHASE 2 GRADING PLAN ENLARGEMENT - POND E CLOSURE (1 of 3)

PROJECT

POSSUM POINT POWER STATION
COAL COMBUSTION RESIDUAL
SURFACE IMPOUNDMENT
CLOSURES
DUMFRIES, VA

gai consultants

ISSUING OFFICE: Richmond | 4198 Cox Road, Suite 114, Glen Allen, VA 23060

GAI CAD FILE PATH: Z:\Energy\2015\C150132.00 - PDM - Possum Point PS CCR\CAD\Production Drawings\C150132-00-000-C-D1-039.dwg - PLOTTED ON: 11/18/2015, 8:39:30 AM - PLOTTED BY: Michael Doyle - PLOT FILE: GAI.stb

CLIENT

VIRGINIA ELECTRIC AND
POWER COMPANY
GLEN ALLEN, VA

COMMONWEALTH OF VIRGINIA
JOHN R. KLAMUT
Lic. No. 048859
12/7/2015
PROFESSIONAL ENGINEER

DRAWN BY:	CHECKED BY:	APPROVED BY:
DOYLEMP	KINDEKW	KLAMUJR
DWG TYPE:	SCALE:	ISSUE DATE:
	AS SHOWN	12/7/2015
SHEET NO.:		REVISION
39 OF 65		△

GAI FILE NUMBER:

C150132-00-000-C-D1-039

ALT./CLIENT DRAWING NUMBER:

GAI DRAWING NUMBER:

039

PERMIT

MATCHLINE – SEE SHEET 41

MATCHLINE – SEE SHEET 39

PROP. CHANNEL E-6 (2/51)

PROP. CHANNEL E-3 (2/51)

PROP. CHANNEL E-2 (2/51)

PROP. CHANNEL E-1 (2/51)

PROP. CHANNEL E-2A (3/51)

PROP. ENERGY DISSIPATER (1/53)

TRANSITION FROM EX. CONCRETE TO PROP. FABRIC FORM CHANNEL (1/53)

PROP. BASIN E-1 OUTLET PROTECTION (1/52)

PROP. PRINCIPAL SPILLWAY (1/52, 4/52)

PROPOSED BAFFLE (4/56)

PROP. EMERGENCY SPILLWAY (3/51)

PROP. CLASS II RIPRAP SLOPE PROTECTION (5/52)

PROP. POND E ACCESS ROAD (7/51)

SEED WITHIN LIMITS OF DISTURBANCE

COMMON FILL

LIMITS OF DISTURBANCE

TOP OF POND

PROP. BASIN E-1

EX. CONCRETE LINED CHANNEL

EX. CULVERT

EX. FENCELINE

EX. METALS POND "A"

EX. WATERLINE

POSSUM POINT RD. (RT. 633)

EX. EAGLE NEST 330'R BUFFER ZONE

EX. EAGLE NEST 660'R BUFFER ZONE

SCALE: 1" = 50'

MAPPING REFERENCE:

EXISTING TOPOGRAPHY PREPARED BY KEDDAL AERIAL MAPPING. PHOTOGRAPHY DATED 02-13-2015. VA-N NAD83 (2011) NAVD88 (GEOID 12A) 1 FT. CONTOUR INTERVALS

SUPPLEMENTED BY GROUND SURVEY PERFORMED BY GAI CONSULTANTS, INC. AND FROM INFORMATION PROVIDED BY DOMINION.

ROW AND BOUNDARY SURVEY INFORMATION SHOWN BY GAI CONSULTANTS DATED, 7-27-2015

NO.:	DATE:	DWN:	CHK:	APV:	DESCRIPTION:

REVISION RECORD

This drawing was produced with computer aided drafting technology and is supported by electronic drawing files. Do not revise this drawing via manual drafting methods.

DRAWING TITLE: PHASE 2 GRADING PLAN ENLARGEMENT - POND E CLOSURE (2 of 3)

CLIENT: VIRGINIA ELECTRIC AND POWER COMPANY GLEN ALLEN, VA

PROJECT: POSSUM POINT POWER STATION COAL COMBUSTION RESIDUAL SURFACE IMPOUNDMENT CLOSURES DUMFRIES, VA

gai consultants

ISSUING OFFICE: Richmond | 4198 Cox Road, Suite 114, Glen Allen, VA 23060

GAI CAD FILE PATH: Z:\Energy\2015\C150132-00--DOM -- Possum Point PS--CCB\CADD\Production Drawings\C150132-00--C-D1-039.dwg PLOTTED ON: 11/18/2015, 8:39:57 AM PLOTTED BY: Michael Doyle PLOT FILE: GAI.stb

COMMONWEALTH OF VIRGINIA
JOHN R. KLAMUT
Lic. No. 048859
12/7/2015
PROFESSIONAL ENGINEER

DRAWN BY:	CHECKED BY:	APPROVED BY:
DOYLEMP	KINDEKW	KLAMUJR
DWG TYPE:	SCALE:	ISSUE DATE:
	AS SHOWN	12/7/2015

SHEET NO.: 40 OF 65

REVISION

GAI FILE NUMBER: C150132-00-000-C-D1-039

ALT./CLIENT DRAWING NUMBER:

GAI DRAWING NUMBER: 040

PERMIT

LIMITS OF DISTURBANCE

EX. POND E OUTFALL RISER, 72" CMP OUTLET PIPE, STEPS, AND WALKWAY TO BE ABANDONED AND REMOVED. EX. CONCRETE OUTFALL STRUCTURE/ENERGY DISSIPATOR TO REMAIN.

EX. POND E OUTFALL 005 STRUCTURE TO REMAIN

APPROX. INV. OF 72" DIA. CMP OUTLET PIPE = 9.5'

BACKFILL TO EXISTING GRADE WITH COMMON FILL AS REQUIRED, BASED ON EXTENT OF CCR REMOVAL DURING PHASE 1

BACKFILL TO EXISTING GRADE WITH COMMON FILL AS REQUIRED, BASED ON EXTENT OF CCR REMOVAL DURING PHASE 1

EX. WETLAND AREA (TYP.)

SEED WITHIN LIMITS OF DISTURBANCE

COMMON FILL

PROP. CHANNEL E-6

MATCHLINE – SEE SHEET 40

SCALE: 1" = 50'

MAPPING REFERENCE:

EXISTING TOPOGRAPHY PREPARED BY KEDDAL AERIAL MAPPING. PHOTOGRAPHY DATED 02-13-2015. VA-N NAD83 (2011) NAVD88 (GEOID 12A) 1 FT. CONTOUR INTERVALS

SUPPLEMENTED BY GROUND SURVEY PERFORMED BY GAI CONSULTANTS, INC. AND FROM INFORMATION PROVIDED BY DOMINION.

ROW AND BOUNDARY SURVEY INFORMATION SHOWN BY GAI CONSULTANTS DATED, 7-27-2015

NO.:	DATE:	DWN:	CHK:	APV:	DESCRIPTION:

REVISION RECORD

This drawing was produced with computer aided drafting technology and is supported by electronic drawing files. Do not revise this drawing via manual drafting methods.

DRAWING TITLE

PHASE 2 GRADING PLAN ENLARGEMENT - POND E CLOSURE (3 of 3)

PROJECT

POSSUM POINT POWER STATION COAL COMBUSTION RESIDUAL SURFACE IMPOUNDMENT CLOSURES

DUMFRIES, VA

CLIENT

VIRGINIA ELECTRIC AND POWER COMPANY

GLEN ALLEN, VA

gai consultants

ISSUING OFFICE: Richmond | 4198 Cox Road, Suite 114, Glen Allen, VA 23060

GAI CAD FILE PATH: Z:\Energy\2015\C150132.00 - DOM - Possum Point PS CCR\CAD\Production Drawings\C150132-00-000-C-D1-039.dwg PLOTTED ON: 11/18/2015 8:49:22 AM PLOTTED BY: Michael Doyle PLOT FILE: GAI.ctb

COMMONWEALTH OF VIRGINIA
JOHN R. KLAMUT
Lic. No. 048859
12/7/2015
PROFESSIONAL ENGINEER

DRAWN BY:	CHECKED BY:	APPROVED BY:
DOYLEMP	KINDEKW	KLAMUJR
DWG TYPE:	SCALE:	ISSUE DATE:
	AS SHOWN	12/7/2015

SHEET NO.: 41 OF 65

REVISION

GAI FILE NUMBER: C150132-00-000-C-D1-039

ALT./CLIENT DRAWING NUMBER:

GAI DRAWING NUMBER: 041

PERMIT

NOTES:

1. PROPOSED GRADING SHOWN IS BASED ON THE ORIGINAL 1955 DESIGN GRADES FROM THE CONSTRUCTION OF POND E AND IS APPROXIMATE. PROPOSED GRADING AND SOIL VOLUMES WILL BE UPDATED BY THE OWNER'S ENGINEER AFTER COMPLETION OF PHASE 2, BASED ON THE ASBUILT GRADES OF PHASE 2.
2. MINIMUM OVERLAND SLOPE FOR PHASE 3 (FINAL GRADES) IS 1%.
3. POND E PHASE 3 GRADING ACTIVITIES SHALL NOT OCCUR UNTIL POND D PHASE 3 (FINAL GRADE) IS COMPLETED, STABILIZED AND VEGETATION IS WELL ESTABLISHED.
4. PHASE 3 GRADES SHOWN REPRESENT THE PROPOSED FINAL GRADE.
5. STONE CHECK DAMS TO BE REMOVED FOLLOWING ESTABLISHMENT OF SUCCESSFUL VEGETATION, AS APPROVED BY THE OWNER'S REPRESENTATIVE.
6. SEDIMENT FROM PROP. BASIN E-1 SHALL BE REMOVED, DRIED OUT AT A LOCATION APPROVED BY THE OWNER'S REPRESENTATIVE AND DISPOSED OF AT AN APPROVED OFFSITE FACILITY.

PROP. CHANNEL E-4 (2/51)
PROP. CHANNEL E-5 (2/51)
PROP. CHANNEL E-3 (2/51)
PROP. CHANNEL E-2 (2/51)
PROP. CHANNEL E-1 (2/51)
PROP. OUTLET CHANNEL (2/51)
PROP. POND E GRAVEL ACCESS ROAD (7/51)
PROP. POND E SECTION A-A (SEE SHEET 49)
PROP. POND E SECTION B-B (SEE SHEET 49)
PS — SEED WITHIN LIMITS OF DISTURBANCE
SEE PHASE 3 GRADING PLAN ENLARGEMENT – POND E (SHEET 3 of 3)
SEE PHASE 3 GRADING PLAN ENLARGEMENT – POND E (SHEET 2 of 3)
SEE PHASE 3 GRADING PLAN ENLARGEMENT – POND E (SHEET 1 of 3)
SEE OVERALL PHASE 3 GRADING PLAN – POND D FOR PROPOSED GRADING IN THIS AREA
PROP. POND E LAYDOWN AREA
EX. METALS POND "B"
EX. METALS POND "A"
EX. POND D
EX. CONC. LINED CHANNEL
EX. CULVERT
EX. GRAVEL ACCESS ROAD
EX. COAL ASH SLUICE LINE
EX. EAGLE NEST
EX. EAGLE NEST 330' R BUFFER ZONE
EX. EAGLE NEST 660' R BUFFER ZONE
QUANTICO CREEK
POSSUM POINT RD
OUTFALL 005
SCALE: 1" = 100'

MAPPING REFERENCE:

EXISTING TOPOGRAPHY PREPARED BY KEDDAL AERIAL MAPPING. PHOTOGRAPHY DATED 02-13-2015. VA-N NAD83 (2011) NAVD88 (GEOID 12A) 1 FT. CONTOUR INTERVALS

SUPPLEMENTED BY GROUND SURVEY PERFORMED BY GAI CONSULTANTS, INC. AND FROM INFORMATION PROVIDED BY DOMINION.

ROW AND BOUNDARY SURVEY INFORMATION SHOWN BY GAI CONSULTANTS DATED, 7-27-2015

NO.:	DATE:	DWN:	CHK:	APV:	DESCRIPTION:

REVISION RECORD

This drawing was produced with computer aided drafting technology and is supported by electronic drawing files. Do not revise this drawing via manual drafting methods.

DRAWING TITLE: OVERALL PHASE 3 GRADING PLAN - POND E

CLIENT: VIRGINIA ELECTRIC AND POWER COMPANY GLEN ALLEN, VA

gai consultants

PROJECT: POSSUM POINT POWER STATION COAL COMBUSTION RESIDUAL SURFACE IMPOUNDMENT CLOSURES DUMFRIES, VA

ISSUING OFFICE: Richmond | 4198 Cox Road, Suite 114, Glen Allen, VA 23060

GAI CAD FILE PATH: Z:\Energy\2015\C150132.00 - DOM - Possum Point PS CCR\CAD\Production Drawings\C150132-00-000-C-D1-042.dwg PLOTTED ON: 11/18/2015 9:06:12 AM PLOTTED BY: Michael Doyle PLOT FILE: GAI.ctb

COMMONWEALTH OF VIRGINIA
JOHN R. KLAMUT
Lic. No. 048859
12/7/2015
PROFESSIONAL ENGINEER

DRAWN BY:	CHECKED BY:	APPROVED BY:
DOYLEMP	KINDEKW	KLAMUJR
DWG TYPE:	SCALE:	ISSUE DATE:
	AS SHOWN	12/7/2015

SHEET NO.: 42 OF 65

REVISION

GAI FILE NUMBER: C150132-00-000-C-D1-042

ALT./CLIENT DRAWING NUMBER:

GAI DRAWING NUMBER: 042

PERMIT

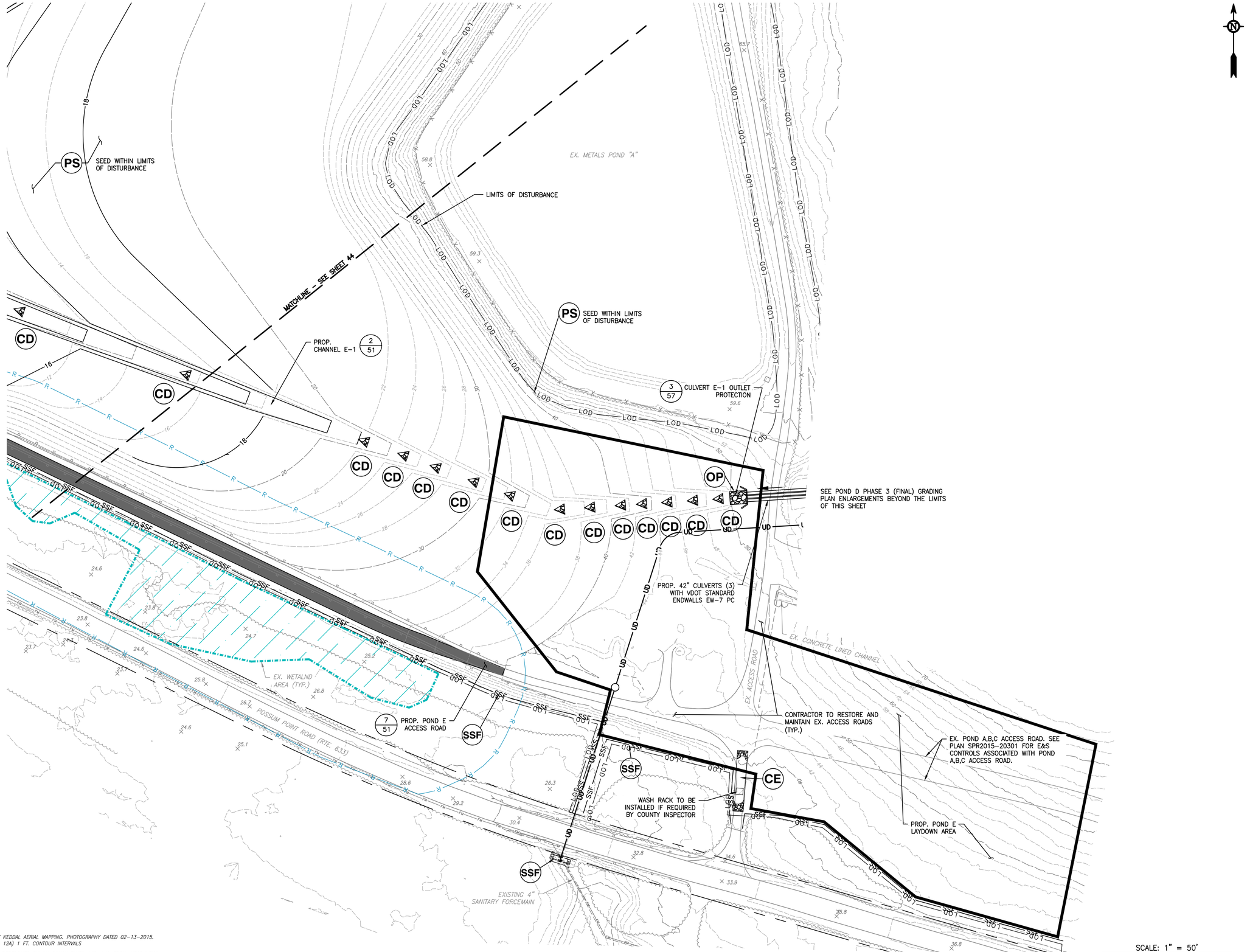

MAPPING REFERENCE:

EXISTING TOPOGRAPHY PREPARED BY KEDDAL AERIAL MAPPING. PHOTOGRAPHY DATED 02-13-2015. VA-N NAD83 (2011) NAVD88 (GEOID 12A) 1 FT. CONTOUR INTERVALS

SUPPLEMENTED BY GROUND SURVEY PERFORMED BY GAI CONSULTANTS, INC. AND FROM INFORMATION PROVIDED BY DOMINION.

ROW AND BOUNDARY SURVEY INFORMATION SHOWN BY GAI CONSULTANTS DATED, 7-27-2015

NO.:	DATE:	DWN:	CHK:	APV:	DESCRIPTION:

REVISION RECORD

This drawing was produced with computer aided drafting technology and is supported by electronic drawing files. Do not revise this drawing via manual drafting methods.

DRAWING TITLE

PHASE 3 GRADING PLAN ENLARGEMENT - POND E (1 of 3)

PROJECT

POSSUM POINT POWER STATION COAL COMBUSTION RESIDUAL SURFACE IMPOUNDMENT CLOSURES

DUMFRIES, VA

CLIENT

VIRGINIA ELECTRIC AND POWER COMPANY

GLEN ALLEN, VA

gai consultants

ISSUING OFFICE: Richmond | 4198 Cox Road, Suite 114, Glen Allen, VA 23060

GAI CAD FILE PATH: Z:\Energy\2015\C150132.00 - DOM - Possum Point PS_CCR\CAD\Production Drawings\C150132-00-000-C-D1-043.dwg PLOTTED ON: 11/18/2015 9:11:34 AM PLOTTED BY: Michael Doyle PLOT FILE: GAI.ctb

COMMONWEALTH OF VIRGINIA
JOHN R. KLAMUT
Lic. No. 048859
12/7/2015
PROFESSIONAL ENGINEER

DRAWN BY:	CHECKED BY:	APPROVED BY:
DOYLEMP	KINDEKW	KLAMUJR
DWG TYPE:	SCALE:	ISSUE DATE:
	AS SHOWN	12/7/2015

SHEET NO.: 43 OF 65

REVISION

GAI FILE NUMBER: C150132-00-000-C-D1-043

ALT./CLIENT DRAWING NUMBER:

GAI DRAWING NUMBER: 043

PERMIT

PROP. CHANNEL E-3 (2/51)

MATCHLINE – SEE SHEET 45

PS — SEED WITHIN LIMITS OF DISTURBANCE

CD

PROP. CHANNEL E-3 (2/51)

PROP. CHANNEL E-2 (2/51)

PROP. CHANNEL E-1 (2/51)

SSF

UNIFORM SECTION MAT CROSSING CHANNEL

PS — SEED WITHIN LIMITS OF DISTURBANCE

LIMITS OF DISTURBANCE

EX. METALS POND "A"

PROP. POND E ACCESS ROAD (7/51)

MATCHLINE – SEE SHEET 43

PROP. CHANNEL E-1 (2/51)

PS — SEED WITHIN LIMITS OF DISTURBANCE

POSSUM POINT ROAD (RTE. 633)

EX. EAGLE NEST 330'R BUFFER ZONE

EX. EAGLE NEST 660'R BUFFER ZONE

SCALE: 1" = 50'

50 0 50 100

MAPPING REFERENCE:

EXISTING TOPOGRAPHY PREPARED BY KEDDAL AERIAL MAPPING. PHOTOGRAPHY DATED 02-13-2015. VA-N NAD83 (2011) NAVD88 (GEOID 12A) 1 FT. CONTOUR INTERVALS

SUPPLEMENTED BY GROUND SURVEY PERFORMED BY GAI CONSULTANTS, INC. AND FROM INFORMATION PROVIDED BY DOMINION.

ROW AND BOUNDARY SURVEY INFORMATION SHOWN BY GAI CONSULTANTS DATED, 7-27-2015

NO.:	DATE:	DWN:	CHK:	APV:	DESCRIPTION:

REVISION RECORD

This drawing was produced with computer aided drafting technology and is supported by electronic drawing files. Do not revise this drawing via manual drafting methods.

DRAWING TITLE

PHASE 3 GRADING PLAN ENLARGEMENT - POND E (2 of 3)

PROJECT

POSSUM POINT POWER STATION
COAL COMBUSTION RESIDUAL SURFACE IMPOUNDMENT CLOSURES
DUMFRIES, VA

gai consultants

CLIENT

VIRGINIA ELECTRIC AND POWER COMPANY
GLEN ALLEN, VA

ISSUING OFFICE: Richmond | 4198 Cox Road, Suite 114, Glen Allen, VA 23060

GAI CAD FILE PATH: Z:\Energy\2015\C150132.00 – DOM – Possum Point PS CCR\CAD\Production Drawings\C150132-00-000-C-D1-043.dwg PLOTTED ON: 11/18/2015, 9:12:03 AM PLOTTED BY: Michael Doyle PLOT FILE: GAI.ctb

COMMONWEALTH OF VIRGINIA
JOHN R. KLAMUT
Lic. No. 048859
12/7/2015
PROFESSIONAL ENGINEER

DRAWN BY:	CHECKED BY:	APPROVED BY:
DOYLEMP	KINDEKW	KLAMUJR
DWG TYPE:	SCALE:	ISSUE DATE:
	AS SHOWN	12/7/2015
SHEET NO.:		REVISION
44 OF 65		

GAI FILE NUMBER:

C150132-00-000-C-D1-043

ALT./CLIENT DRAWING NUMBER:

GAI DRAWING NUMBER:

044

PERMIT

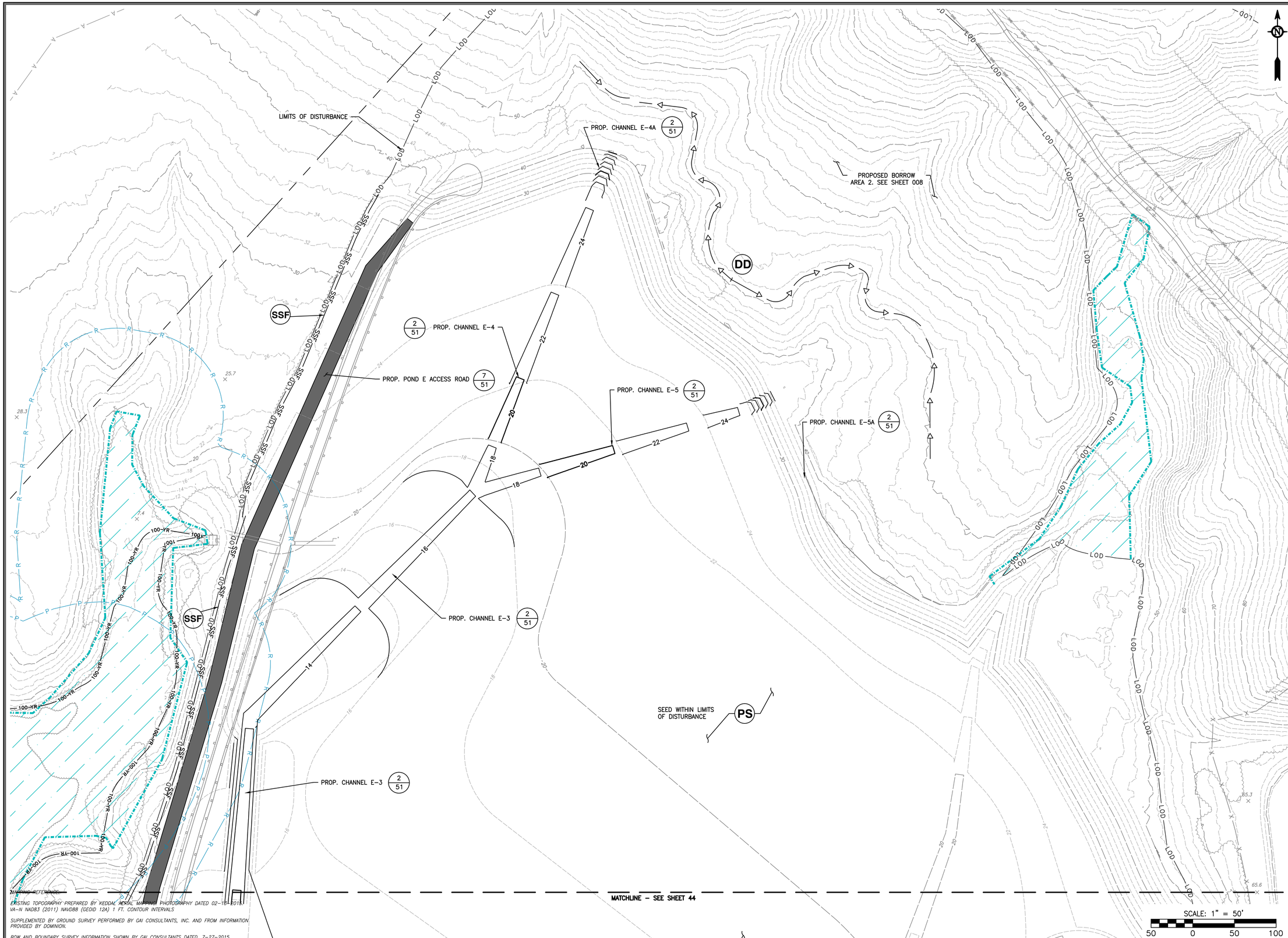

MAPPING REFERENCE:

EXISTING TOPOGRAPHY PREPARED BY KEDDAL AERIAL MAPPING PHOTOGRAPHY DATED 02-15-2015. VA-N NAD83 (2011) NAVD88 (GEOID 12A) 1 FT. CONTOUR INTERVALS

SUPPLEMENTED BY GROUND SURVEY PERFORMED BY GAI CONSULTANTS, INC. AND FROM INFORMATION PROVIDED BY DOMINION.

ROW AND BOUNDARY SURVEY INFORMATION SHOWN BY GAI CONSULTANTS DATED, 7-27-2015

NO.:	DATE:	DWN:	CHK:	APV:	DESCRIPTION:

REVISION RECORD

This drawing was produced with computer aided drafting technology and is supported by electronic drawing files. Do not revise this drawing via manual drafting methods.

DRAWING TITLE
PHASE 3 GRADING PLAN ENLARGEMENT - POND E (3 of 3)

PROJECT
POSSUM POINT POWER STATION
COAL COMBUSTION RESIDUAL
SURFACE IMPOUNDMENT
CLOSURES
DUMFRIES, VA

CLIENT
VIRGINIA ELECTRIC AND POWER COMPANY
GLEN ALLEN, VA

gai consultants

ISSUING OFFICE: Richmond | 4198 Cox Road, Suite 114, Glen Allen, VA 23060

GAI CAD FILE PATH: Z:\Energy\2015\C150132.00 - DOM - Possum Point PS_CCR\CAD\Production Drawings\C150132-00-000-C-D1-043.dwg PLOTTED ON: 11/18/2015, 9:12:28 AM PLOTTED BY: Michael Doyle PLOT FILE: GAI.ctb

COMMONWEALTH OF VIRGINIA
JOHN R. KLAMUT
Lic. No. 048859
12/7/2015
PROFESSIONAL ENGINEER

DRAWN BY:	CHECKED BY:	APPROVED BY:
DOYLEMP	KINDEKW	KLAMUJR
DWG TYPE:	SCALE:	ISSUE DATE:
	AS SHOWN	12/7/2015
SHEET NO.: 45 OF 65		REVISION

GAI FILE NUMBER: C150132-00-000-C-D1-043

ALT./CLIENT DRAWING NUMBER:

GAI DRAWING NUMBER: 045

PERMIT

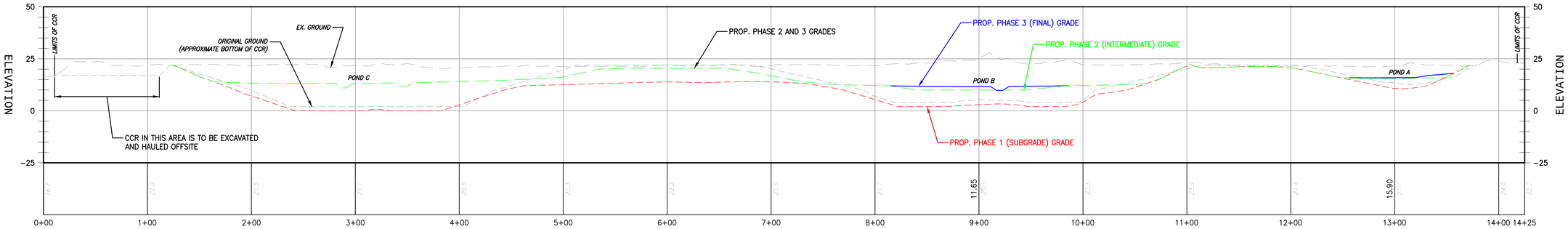

POND A,B,C SECTION A-A
SCALE: 1"=50' HORIZ.
1"=25' VERT.

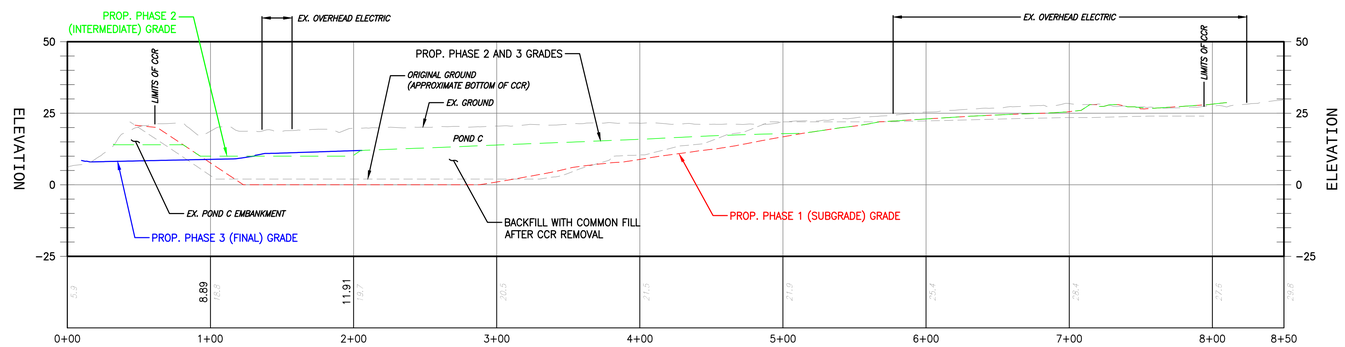

POND C SECTION B-B
SCALE: 1"=50' HORIZ.
1"=25' VERT.

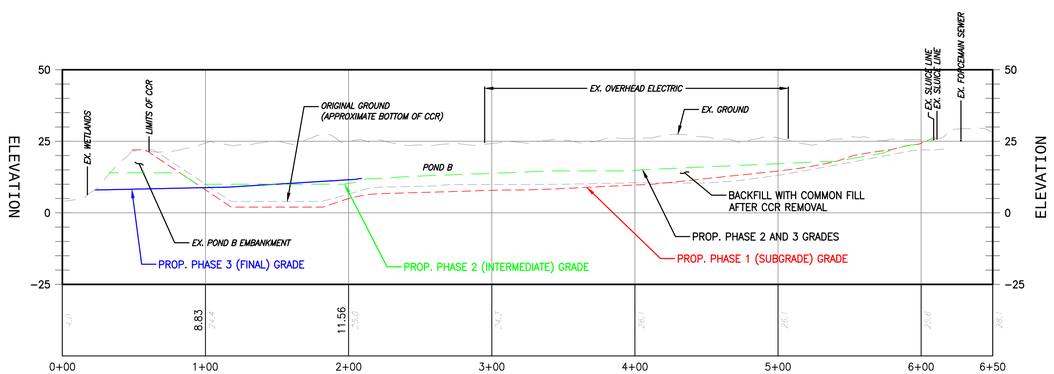

POND B SECTION C-C
SCALE: 1"=50' HORIZ.
1"=25' VERT.

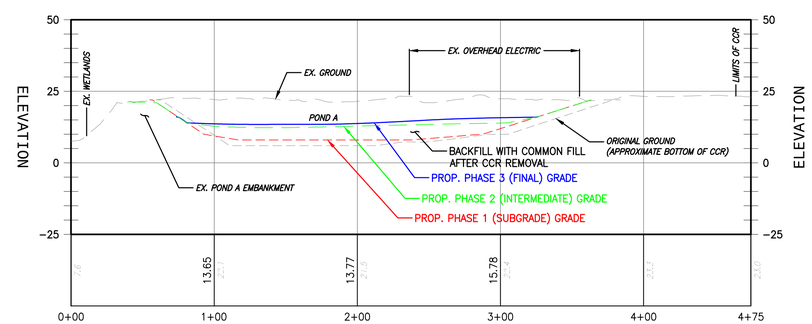

POND A SECTION D-D
SCALE: 1"=50' HORIZ.
1"=25' VERT.

NOTES:
1. THIS DRAWING DEPICTS THE SITE CROSS SECTIONS AS IDENTIFIED ON THE SITE PLANS. REFER TO THE SITE PLANS FOR ADDITIONAL INFORMATION.
2. THE CROSS SECTIONS FOR POND A,B,C AND POND E DEPICT APPROXIMATE SURFACES OF EXISTING GROUND, ORIGINAL GROUND (BOTTOM OF CCR), PROPOSED PHASE 1 GRADING, PROPOSED PHASE 2 GRADING, AND PROPOSED PHASE 3 (FINAL) GRADING.
3. EARTHWORK SHALL BE PERFORMED IN ACCORDANCE WITH THE DRAWINGS, TECHINCAL SPECIFICATIONS, AND CQC PLAN IN ORDER TO DEVELOP THE PROPOSED GRADES SHOWN ON THE SITE PLANS AND CROSS SECTIONS.
4. PLACE COMMON FILL BETWEEN PHASE 1 AND PHASE 2/3 GRADES FOR POND A,B,C AND E.
5. ORIGINAL GROUND IS PROVIDED FOR GENERAL INFORMATION ONLY. IT IS BASED ON DESIGN DRAWINGS AND IS APPROXIMATE. ORIGINAL GROUND DOES NOT ACCOUNT FOR BORROW AREAS AND OTHER FEATURES BEHIND THE DAMS THAT MAY SIGNIFICANTLY IMPACT THE APPROXIMATE GRADE.
6. LOCATIONS OF UTILITIES AND OTHER SITE FEATURES ARE APPROXIMATE AND SHOULD BE FIELD VERIFIED BY THE CONTRACTOR. CLEARANCES OF OVERHEAD ELECTRIC UTILITIES ARE NOT SHOWN. THE CONTRACTOR SHOULD VERIFY THE OVERHEAD CLEARANCES AND USE CAUTION WHEN PERFORMING WORK IN THESE AREAS.
7. THE PROPOSED PHASE 1 GRADES DO NOT PRECISELY LINE UP WITH THE ORIGINAL GROUND GRADES, AS THE GRADES ARE APPROXIMATE. CONTRACTOR AND QC TEAM SHALL VERIFY THAT ALL CCR IN POND A,B,C AND E ARE REMOVED PRIOR TO PROCEEDING WITH PHASE 2.

SCALE: 1" = 50'
50 0 50 100

NO.:	DATE:	DWN:	CHK:	APV:	DESCRIPTION:

REVISION RECORD

This drawing was produced with computer aided drafting technology and is supported by electronic drawing files. Do not revise this drawing via manual drafting methods.

DRAWING TITLE
SITE CROSS SECTIONS (SHEET 1 OF 4)

CLIENT
VIRGINIA ELECTRIC AND POWER COMPANY
GLEN ALLEN, VA

gai consultants

PROJECT
POSSUM POINT POWER STATION
COAL COMBUSTION RESIDUAL
SURFACE IMPOUNDMENT
CLOSURES
DUMFRIES, VA

ISSUING OFFICE: Richmond | 4198 Cox Road, Suite 114, Glen Allen, VA 23060

GAI CAD FILE PATH: Z:\Energy\2015\C150132-00-000 — DOM — Possum Point PS CCR\CAD\Production Drawings\C150132-00-000-C-D1-046.dwg PLOTTED ON: 11/18/2015 9:39:41 AM PLOTTED BY: Michael Doyle PLOT FILE: GAI.ctb

COMMONWEALTH OF VIRGINIA
JOHN R. KLAMUT
Lic. No. 048859
12/7/2015
PROFESSIONAL ENGINEER

DRAWN BY:	CHECKED BY:	APPROVED BY:
BRIARS	KINDEKW	KLAMUJR
DWG TYPE:	SCALE:	ISSUE DATE:
	AS SHOWN	12/7/2015

SHEET NO.: 46 OF 65
REVISION

GAI FILE NUMBER: C150132-00-000-C-D1-046

ALT./CLIENT DRAWING NUMBER:

GAI DRAWING NUMBER: 046

PERMIT

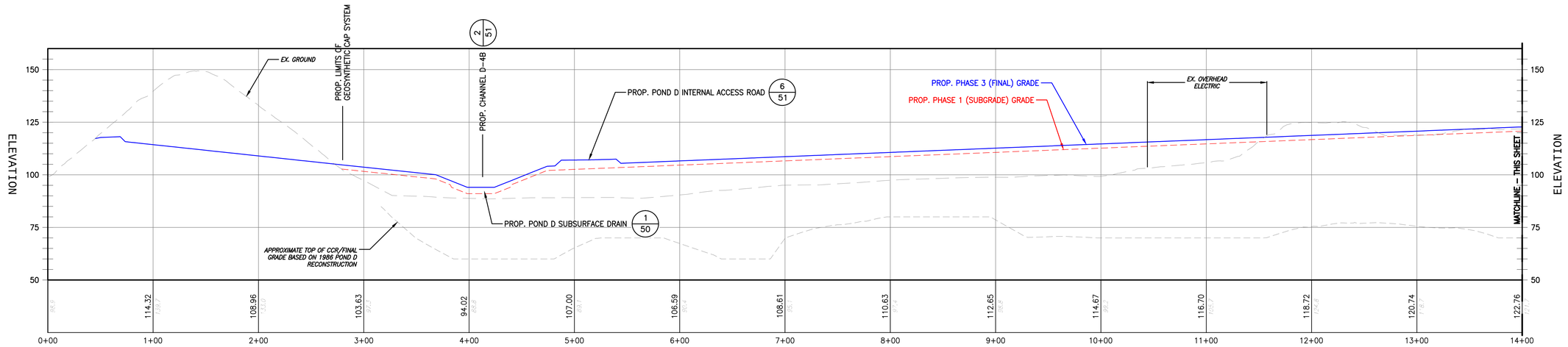

POND D SECTION A-A
SCALE: 1"=50' HORIZ.
1"=25' VERT.

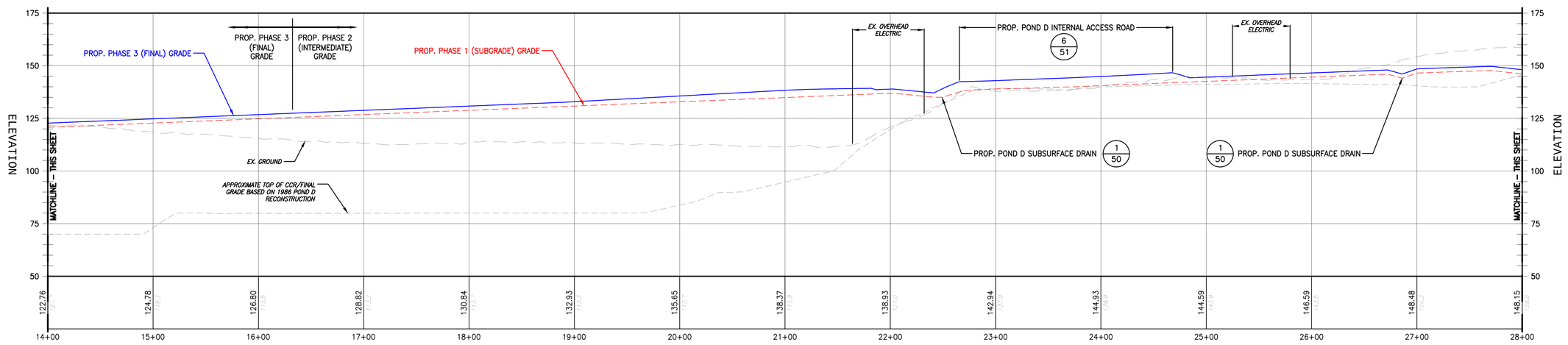

POND D SECTION A-A
SCALE: 1"=50' HORIZ.
1"=25' VERT.

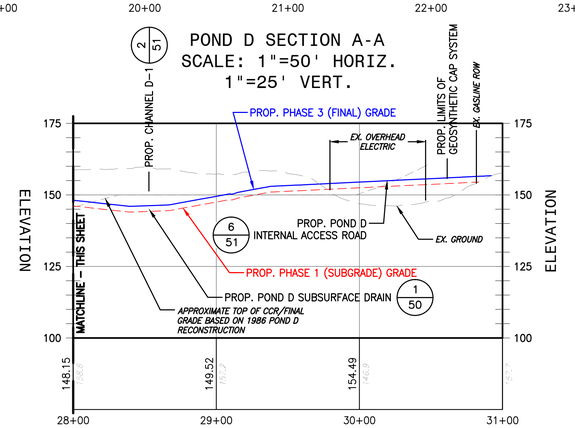

POND D SECTION A-A
SCALE: 1"=50' HORIZ.
1"=25' VERT.

NOTES:

1. THIS DRAWING DEPICTS THE SITE CROSS SECTIONS AS IDENTIFIED ON THE SITE PLANS. REFER TO THE SITE PLANS FOR ADDITIONAL INFORMATION.
2. THE CROSS SECTIONS FOR POND D DEPICT APPROXIMATE SURFACES OF EXISTING GROUND, ORIGINAL GROUND (BOTTOM OF CCR), PROPOSED PREPARED SUBGRADE SURFACE AND PROPOSED FINAL GRADE.
3. EARTHWORK SHALL BE PERFORMED IN ACCORDANCE WITH THE DRAWINGS, TECHINCAL SPECIFICATIONS, AND CQC PLAN IN ORDER TO DEVELOP THE PROPOSED GRADES SHOWN ON THE SITE PLANS AND CROSS SECTIONS.
4. PLACE SUBGRADE FILL (INCLUDES CCR) BETWEEN SUBGRADE AND EXISTING GRADE IN POND D, WITHIN GEOSYNTHETIC CAP SYSTEM LIMITS. COMMON FILL SHALL BE PLACED OUTSIDE THE LIMITS OF THE GEOSYNTHETIC CAP SYSTEM TO MEET PROPOSED FINAL GRADE, UNLESS OTHERWISE NOTED.
5. 1986 GRADE IS PROVIDED FOR GENERAL INFORMATION ONLY. IT IS BASED ON DESIGN DRAWINGS AND IS APPROXIMATE. IT DOES NOT ACCOUNT FOR BORROW AREAS AND OTHER FEATURES BEHIND THE DAMS THAT MAY SIGNIFICANTLY IMPACT THE APPROXIMATE GRADE.
6. LOCATIONS OF UTILITIES AND OTHER SITE FEATURES ARE APPROXIMATE AND SHOULD BE FIELD VERIFIED BY THE CONTRACTOR. CLEARANCES OF OVERHEAD ELECTRIC UTILITIES ARE NOT SHOWN. THE CONTRACTOR SHOULD VERIFY THE OVERHEAD CLEARANCES AND USE CAUTION WHEN PERFORMING WORK IN THESE AREAS.
7. GEOSYNTHETIC LAYERS ASSOCIATED WITH THE POND D CAP SHALL BE INSTALLED IN ACCORDANCE WITH THE DRAWINGS, TECHNICAL SPECIFICATIONS, AND CQC PLAN IN ORDER TO DEVELOP THE PROPOSED GRADES AND LAYERS PRESENTED ON THE SITE PLANS, DETAILS, AND CROSS SECTIONS.

SCALE: 1" = 50'
50 0 50 100

NO.:	DATE:	DWN:	CHK:	APV:	DESCRIPTION:

REVISION RECORD

This drawing was produced with computer aided drafting technology and is supported by electronic drawing files. Do not revise this drawing via manual drafting methods.

CLIENT
VIRGINIA ELECTRIC AND POWER COMPANY
GLEN ALLEN, VA

gai consultants

DRAWING TITLE
SITE CROSS SECTIONS (SHEET 2 OF 4)

PROJECT
POSSUM POINT POWER STATION
COAL COMBUSTION RESIDUAL SURFACE IMPOUNDMENT CLOSURES
DUMFRIES, VA

ISSUING OFFICE: Richmond | 4198 Cox Road, Suite 114, Glen Allen, VA 23060

GAI CAD FILE PATH: Z:\Energy\2015\C150132-00-000 - PDM - Possum Point PS_CCR\CADD\Production Drawings\C150132-00-000-C-D1-046.dwg PLOTTED ON: 11/18/2015 9:46:02 AM PLOTTED BY: Michael Doyle PLOT FILE: GAI.stb

COMMONWEALTH OF VIRGINIA
JOHN R. KLAMUT
Lic. No. 048859
12/7/2015
PROFESSIONAL ENGINEER

DRAWN BY:	CHECKED BY:	APPROVED BY:
BRIARS	KINDEKW	KLAMUJR
DWG TYPE:	SCALE:	ISSUE DATE:
	AS SHOWN	12/7/2015

SHEET NO.: 47 OF 65

REVISION

GAI FILE NUMBER: C150132-00-000-C-D1-046

ALT./CLIENT DRAWING NUMBER:

GAI DRAWING NUMBER: 047

PERMIT

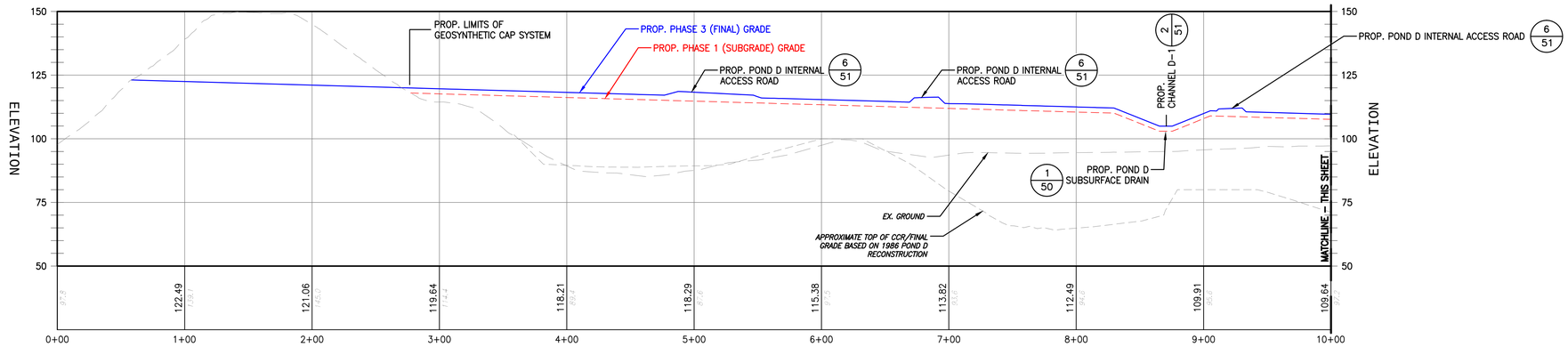

POND D SECTION B-B
SCALE: 1"=50' HORIZ.
1"=25' VERT.

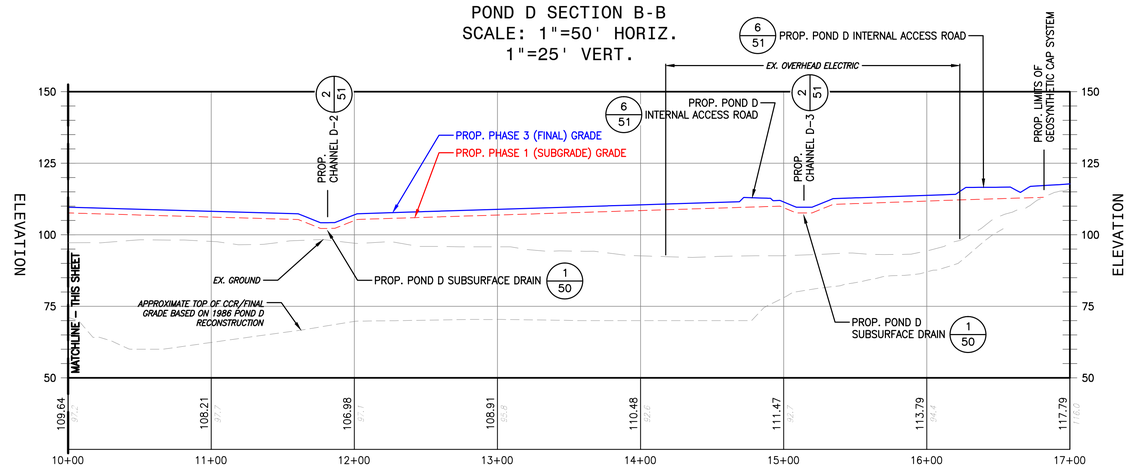

POND D SECTION B-B
SCALE: 1"=50' HORIZ.
1"=25' VERT.

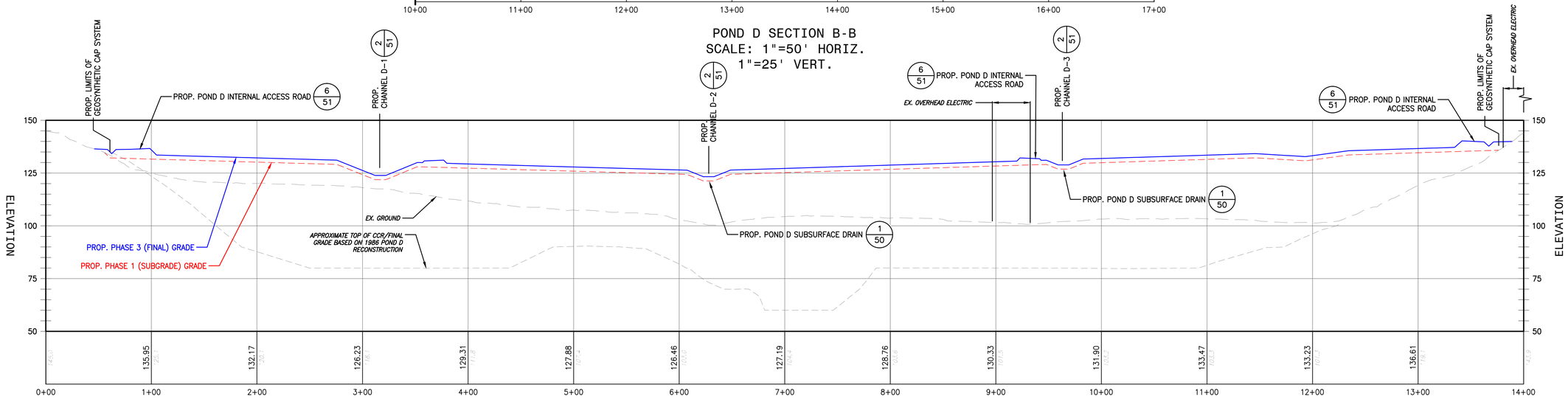

POND D SECTION C-C
SCALE: 1"=50' HORIZ.
1"=25' VERT.

NOTES:

1. THIS DRAWING DEPICTS THE SITE CROSS SECTIONS AS IDENTIFIED ON THE SITE PLANS. REFER TO THE SITE PLANS FOR ADDITIONAL INFORMATION.
2. THE CROSS SECTIONS FOR POND D DEPICT APPROXIMATE SURFACES OF EXISTING GROUND, ORIGINAL GROUND (BOTTOM OF CCR), PROPOSED PREPARED SUBGRADE SURFACE AND PROPOSED FINAL GRADE.
3. EARTHWORK SHALL BE PERFORMED IN ACCORDANCE WITH THE DRAWINGS, TECHINCAL SPECIFICATIONS, AND CQC PLAN IN ORDER TO DEVELOP THE PROPOSED GRADES SHOWN ON THE SITE PLANS AND CROSS SECTIONS.
4. PLACE SUBGRADE FILL (INCLUDES CCR) BETWEEN SUBGRADE AND EXISTING GRADE IN POND D, WITHIN GEOSYNTHETIC CAP SYSTEM LIMITS. COMMON FILL SHALL BE PLACED OUTSIDE THE LIMITS OF THE GEOSYNTHETIC CAP SYSTEM TO MEET PROPOSED FINAL GRADE, UNLESS OTHERWISE NOTED.
5. 1986 GRADE IS PROVIDED FOR GENERAL INFORMATION ONLY. IT IS BASED ON DESIGN DRAWINGS AND IS APPROXIMATE. IT DOES NOT ACCOUNT FOR BORROW AREAS AND OTHER FEATURES BEHIND THE DAMS THAT MAY SIGNIFICANTLY IMPACT THE APPROXIMATE GRADE.
6. LOCATIONS OF UTILITIES AND OTHER SITE FEATURES ARE APPROXIMATE AND SHOULD BE FIELD VERIFIED BY THE CONTRACTOR. CLEARANCES OF OVERHEAD ELECTRIC UTILITIES ARE NOT SHOWN. THE CONTRACTOR SHOULD VERIFY THE OVERHEAD CLEARANCES AND USE CAUTION WHEN PERFORMING WORK IN THESE AREAS.
7. GEOSYNTHETIC LAYERS ASSOCIATED WITH THE POND D CAP SHALL BE INSTALLED IN ACCORDANCE WITH THE DRAWINGS, TECHNICAL SPECIFICATIONS, AND CQC PLAN IN ORDER TO DEVELOP THE PROPOSED GRADES AND LAYERS PRESENTED ON THE SITE PLANS, DETAILS, AND CROSS SECTIONS.

SCALE: 1" = 50'
50 0 50 100

NO.:	DATE:	DWN:	CHK:	APV:	DESCRIPTION:

REVISION RECORD

This drawing was produced with computer aided drafting technology and is supported by electronic drawing files. Do not revise this drawing via manual drafting methods.

PLOTTED ON: 11/18/2015 9:46:37 AM PLOTTED BY: Michael Doyle PLOT FILE: GAI.stb

DRAWING TITLE
SITE CROSS SECTIONS (SHEET 3 OF 4)

CLIENT
VIRGINIA ELECTRIC AND POWER COMPANY
GLEN ALLEN, VA

gai consultants

PROJECT
POSSUM POINT POWER STATION
COAL COMBUSTION RESIDUAL SURFACE IMPOUNDMENT CLOSURES
DUMFRIES, VA

ISSUING OFFICE: Richmond |4198 Cox Road, Suite 114, Glen Allen, VA 23060

GAI CAD FILE PATH: Z:\Energy\2015\C150132-00\Production Drawings\C150132-00-000-C-D1-046.dwg – Possum Point PS_CCR\CAD\Production Drawings – DOM –

COMMONWEALTH OF VIRGINIA
JOHN R. KLAMUT
Lic. No. 048859
12/7/2015
PROFESSIONAL ENGINEER

DRAWN BY:	CHECKED BY:	APPROVED BY:
BRIARS	KINDEKW	KLAMUJR
DWG TYPE:	SCALE:	ISSUE DATE:
	AS SHOWN	12/7/2015

SHEET NO.: 48 OF 65

REVISION

GAI FILE NUMBER: C150132-00-000-C-D1-046

ALT./CLIENT DRAWING NUMBER:

GAI DRAWING NUMBER: 048

PERMIT

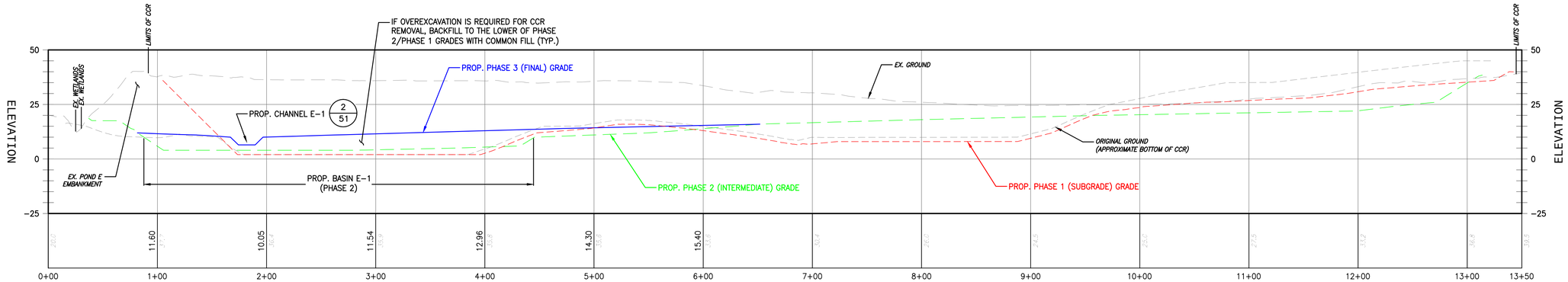

POND E SECTION A-A
SCALE: 1"=50' HORIZ.
1"=25' VERT.

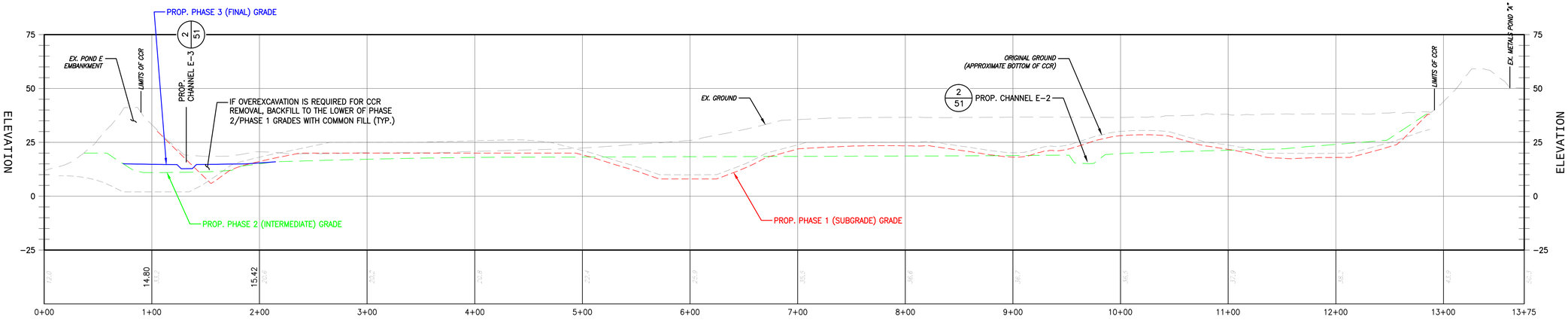

POND E SECTION B-B
SCALE: 1"=50' HORIZ.
1"=25' VERT.

NOTES:
1. THIS DRAWING DEPICTS THE SITE CROSS SECTIONS AS IDENTIFIED ON THE SITE PLANS. REFER TO THE SITE PLANS FOR ADDITIONAL INFORMATION.
2. THE CROSS SECTIONS FOR POND A,B,C AND POND E DEPICT APPROXIMATE SURFACES OF EXISTING GROUND, ORIGINAL GROUND (BOTTOM OF CCR), PROPOSED PHASE 1 GRADING, PROPOSED PHASE 2 GRADING, AND PROPOSED PHASE 3 (FINAL) GRADING.
3. EARTHWORK SHALL BE PERFORMED IN ACCORDANCE WITH THE DRAWINGS, TECHINCAL SPECIFICATIONS, AND CQC PLAN IN ORDER TO DEVELOP THE PROPOSED GRADES SHOWN ON THE SITE PLANS AND CROSS SECTIONS.
4. PLACE COMMON FILL BETWEEN PHASE 1 AND PHASE 2/3 GRADES FOR POND A,B,C AND E.
5. ORIGINAL GROUND IS PROVIDED FOR GENERAL INFORMATION ONLY. IT IS BASED ON DESIGN DRAWINGS AND IS APPROXIMATE. ORIGINAL GROUND DOES NOT ACCOUNT FOR BORROW AREAS AND OTHER FEATURES BEHIND THE DAMS THAT MAY SIGNIFICANTLY IMPACT THE APPROXIMATE GRADE.
6. LOCATIONS OF UTILITIES AND OTHER SITE FEATURES ARE APPROXIMATE AND SHOULD BE FIELD VERIFIED BY THE CONTRACTOR. CLEARANCES OF OVERHEAD ELECTRIC UTILITIES ARE NOT SHOWN. THE CONTRACTOR SHOULD VERIFY THE OVERHEAD CLEARANCES AND USE CAUTION WHEN PERFORMING WORK IN THESE AREAS.
7. THE PROPOSED PHASE 1 GRADES DO NOT PRECISELY LINE UP WITH THE ORIGINAL GROUND GRADES, AS THE GRADES ARE APPROXIMATE. CONTRACTOR AND QC TEAM SHALL VERIFY THAT ALL ASH/CCR IN POND A,B,C AND E ARE REMOVED PRIOR TO PROCEEDING WITH PHASE 2.

SCALE: 1" = 50'
50 0 50 100

NO.:	DATE:	DWN:	CHK:	APV:	DESCRIPTION:

REVISION RECORD

This drawing was produced with computer aided drafting technology and is supported by electronic drawing files. Do not revise this drawing via manual drafting methods.

DRAWING TITLE
SITE CROSS SECTIONS (SHEET 4 OF 4)

CLIENT
VIRGINIA ELECTRIC AND POWER COMPANY
GLEN ALLEN, VA

gai consultants

PROJECT
POSSUM POINT POWER STATION
COAL COMBUSTION RESIDUAL SURFACE IMPOUNDMENT CLOSURES
DUMFRIES, VA

ISSUING OFFICE: Richmond |4198 Cox Road, Suite 114, Glen Allen, VA 23060

GAI CAD FILE PATH: Z:\Energy\2015\C150132\20 - DOM - Possum Point PS CCR\CAD\Production Drawings\C150132-00-000-C-D1-046.dwg PLOTTED BY: Michael Doyle PLOT FILE: GAI.ctb PLOTTED ON: 11/18/2015 9:41:07 AM

COMMONWEALTH OF VIRGINIA
JOHN R. KLAMUT
Lic. No. 048859
12/7/2015
PROFESSIONAL ENGINEER

DRAWN BY:	CHECKED BY:	APPROVED BY:
BRIARS	KINDEKW	KLAMUJR
DWG TYPE:	SCALE:	ISSUE DATE:
	AS SHOWN	12/7/2015

SHEET NO.: 49 OF 65
REVISION

GAI FILE NUMBER: C150132-00-000-C-D1-046

ALT./CLIENT DRAWING NUMBER:

GAI DRAWING NUMBER: 049

PERMIT

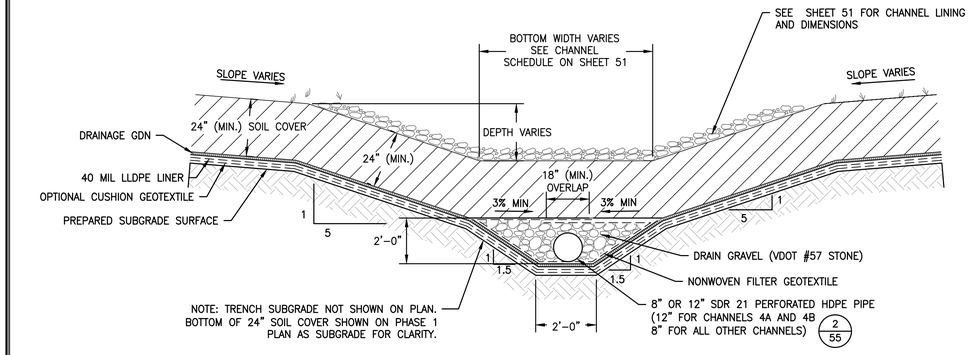

SUBSURFACE DRAIN HEADER TRENCH CHANNEL DETAIL 1/50
N.T.S.

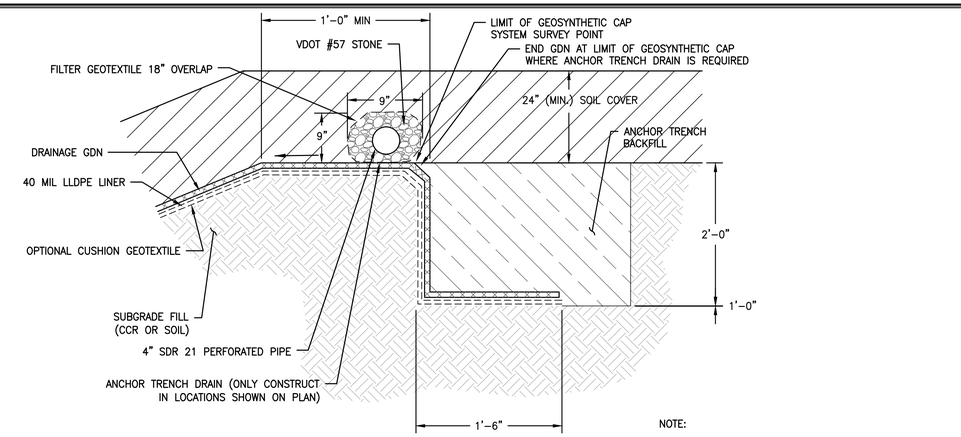

NOTE:

1. THICKNESS OF GEOSYNTHETIC CAP SYSTEM ASSEMBLY COMPONENTS ARE EXAGGERATED FOR CLARITY.

TYPICAL ANCHOR TRENCH DETAIL 4/50
N.T.S.

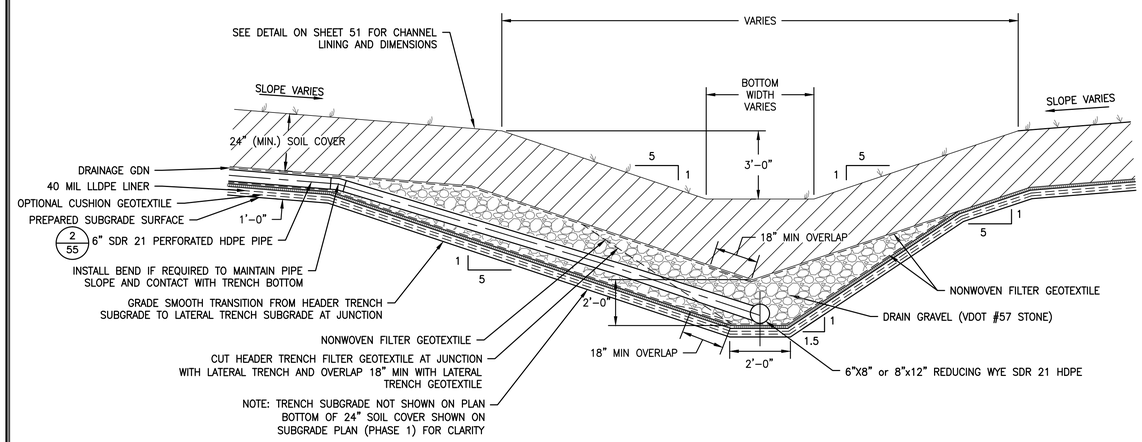

SUBSURFACE DRAIN HEADER–LATERAL TRENCH JUNCTION DETAIL 2/50
N.T.S.

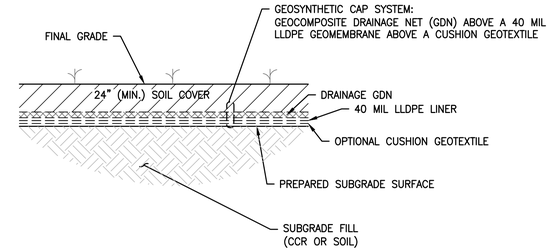

TYPICAL FINAL COVER/CAP SYSTEM DETAIL 5/50
N.T.S.

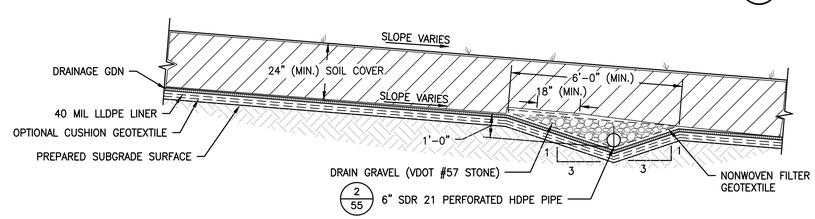

NOTE: GRADING FOR TRENCH SUBGRADE NOT SHOWN ON PLAN. BOTTOM OF 24" SOIL COVER SHOWN ON PHASE 1 PLAN AS SUBGRADE FOR CLARITY.

SUBSURFACE DRAIN PIPE LATERAL 6/50
N.T.S.

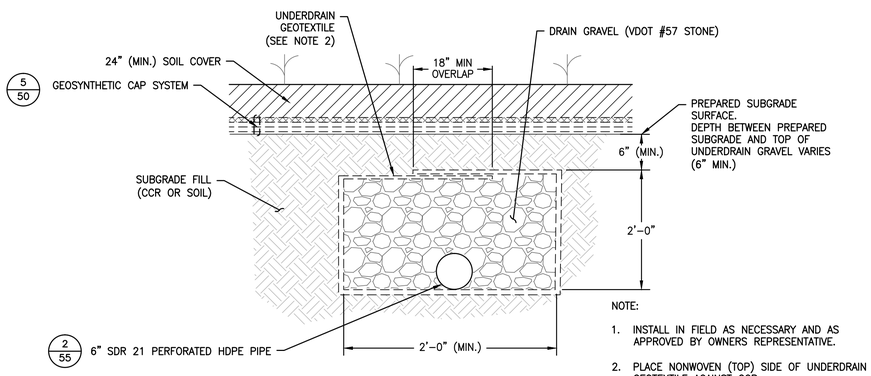

NOTE:

1. INSTALL IN FIELD AS NECESSARY AND AS APPROVED BY OWNERS REPRESENTATIVE.
2. PLACE NONWOVEN (TOP) SIDE OF UNDERDRAIN GEOTEXTILE AGAINST CCR

TYPICAL UNDERDRAIN DETAIL 3/50
N.T.S.

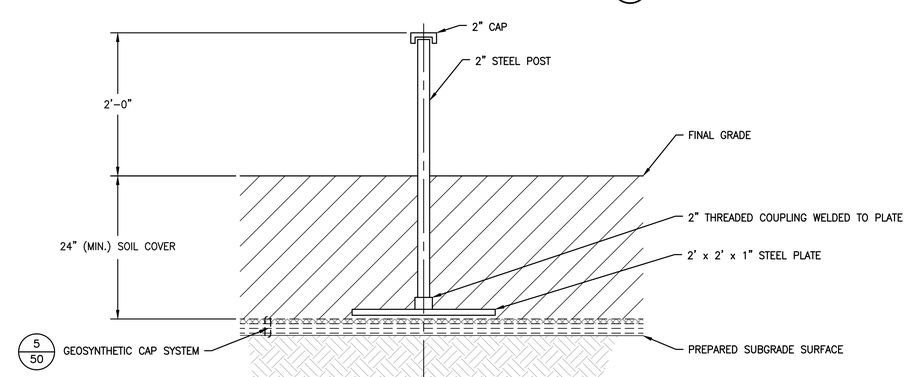

SETTLEMENT MONUMENT DETAIL 7/50
N.T.S.

NO.:	DATE:	DWN:	CHK:	APV:	DESCRIPTION:

REVISION RECORD

This drawing was produced with computer aided drafting technology and is supported by electronic drawing files. Do not revise this drawing via manual drafting methods.

DRAWING TITLE
DETAILS - CAP SYSTEM (SHEET 1 OF 2)

CLIENT
VIRGINIA ELECTRIC AND POWER COMPANY
GLEN ALLEN, VA

gai consultants

PROJECT
POSSUM POINT POWER STATION
COAL COMBUSTION RESIDUAL SURFACE IMPOUNDMENT CLOSURES
DUMFRIES, VA

ISSUING OFFICE: Richmond | 4198 Cox Road, Suite 114, Glen Allen, VA 23060

GAI CAD FILE PATH: Z:\Energy\2015\C150132.00 - DOM - Possum Point CCR\CAD\Production Drawings\C150132-00-000-C-D1-050.dwg PLOTTED ON: 11/17/2015 11:44:18 AM PLOTTED BY: Michael Doyle PLOT FILE: GAI.stb

COMMONWEALTH OF VIRGINIA
JOHN R. KLAMUT
Lic. No. 048859
12/7/2015
PROFESSIONAL ENGINEER

DRAWN BY:	CHECKED BY:	APPROVED BY:
CUMMIRM	KUZMKMW	KLAMUJR
DWG TYPE:	SCALE:	ISSUE DATE:
	AS SHOWN	12/7/2015

SHEET NO.: 50 OF 65
REVISION

GAI FILE NUMBER: C150132-00-000-C-D1-050

ALT./CLIENT DRAWING NUMBER:

GAI DRAWING NUMBER: 050

PERMIT

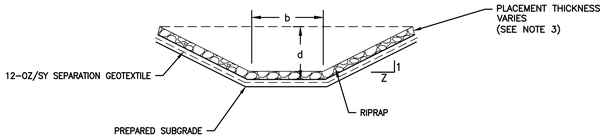

RIPRAP–LINED CHANNEL (1/51)
N.T.S.

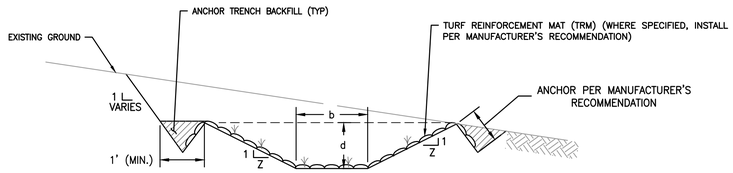

GRASS–LINED CHANNEL (2/51)
N.T.S.

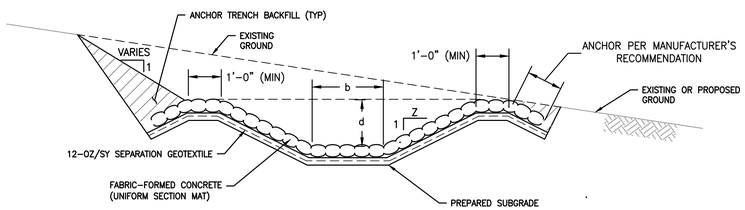

FABRIC–FORMED CONCRETE LINED CHANNEL (3/51)
N.T.S.

CHANNEL SCHEDULE				
CHANNEL ID	LINING	BOTTOM WIDTH, b (FT)	DEPTH, d (FT)	SIDE SLOPES, z
Channel B-1	P-550 TRM	4	1.5	3
Channel B-2	P-550 TRM	4	1.5	3
Channel B-3	SC-250 TRM	6	2.5	3
Channel C-1	SC-250 TRM	4	2	3
Channel C-2	SC-250 TRM	4	2	3
Channel C-3	SC-250 TRM	6	2	3
Channel D-1	SC-250 TRM	10	3	5
Channel D-2	SC-250 TRM	10	3	5
Channel D-3	SC-250 TRM	10	3	5
Channel D-4A	SD-475-OCT CCM	25	4	5
Channel D-4B	SC-250 TRM	25	3	5
Channel E-1	P-550 TRM	15	4	2
Channel E-2	P-550 TRM	10	2.5	2
Channel E-2A	4" Fabric Form Concrete	3	1.5	2
Channel E-3	SC-250 TRM	10	2	2
Channel E-4	P-550 TRM	10	1	2
Channel E-4A	P-550 TRM	10	0.5	2
Channel E-5	SC-250 TRM	10	1	2
Channel E-5A	SC-250 TRM	10	0.5	2
Channel E-6	SC-250 TRM	15	1.5	2
Channel E-6A	SC-250 TRM	10	0.5	2
Pond E Outlet Channel (See Note 5)	P-550 TRM	15	3.5	2
Basin E-1 Spillway	8" Fabric Form Concrete	20	2	6
Basin C-1 Spillway	Class AI Riprap	4	2	3
Basin B-1 Spillway	Class AI Riprap	4	2	3
Channel AR-1 Through AR-19	SC-250 TRM	0	2	5

CHANNEL SCHEDULE NOTES:

1. TRM = TURF REINFORCED MAT, CCM = CELLULAR CONCRETE MATTRESS.
2. ALL CHANNEL LINING PROTECTION AND DIMENSIONS SHALL BE CONSIDERED MINIMUM FINISHED DIMENSIONS WITH LINING.
3. PLACEMENT THICKNESS FOR CLASS II ROCK IS 45". PLACEMENT THICKNESS FOR CLASS AI ROCK IS 27".
4. CONTRACTOR TO PROVIDE NORTH AMERICAN GREEN TRM LINING AS SHOWN IN CHANNEL SCHEDULE OR EQUIVALENT PRODUCT AS APPROVED BY OWNER'S REPRESENTATIVE.
5. THE POND E OUTLET CHANNEL BEGINS DOWNSTREAM OF THE CONFLUENCE WITH CHANNEL E–1 AND E–3. THE DIMENSIONS SHOWN ON THE CHANNEL SCHEDULE ARE THE MINIMUM DIMENSIONS FOR THIS CHANNEL, WHICH TAPERS OUT TO PROVIDE 10:1 DRIVEABLE SIDE SLOPES NEAR THE DISCHARGE LOCATION. THE TRM LINING WILL TRANSITION TO AN 8 INCH THICK FABRICFORM CONCRETE LINING ON THE DRIVEABLE SURFACE, AND THEN TRANSITION BACK TO VEGETATION BEFORE DISCHARGING INTO THE TRIBUTARY OF QUANTICO CREEK. REFER TO PLAN VIEW SHEET 44.

POND D INTERNAL ACCESS ROAD (6/51)
N.T.S.

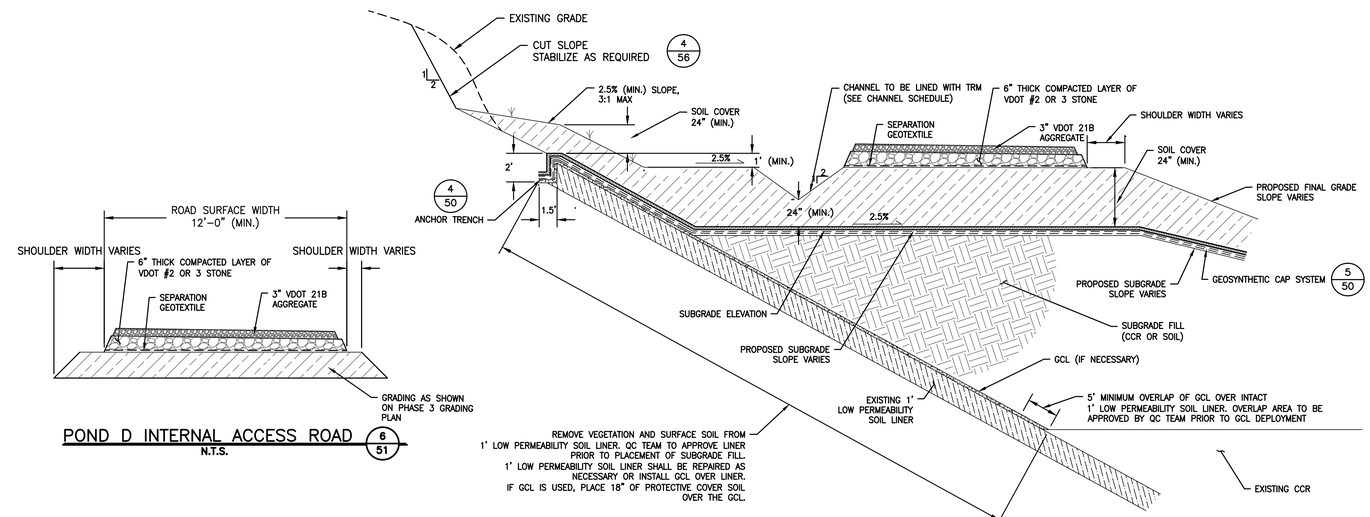

POND D TYPICAL CROSS SECTION (4/51)
N.T.S.

NOTE:

1) GRADES SHOWN ON PHASE 3 GRADING PLAN REPRESENT PROPOSED FINAL GRADE AND DO NOT INCLUDE PROPOSED ROAD AGGREGATE.

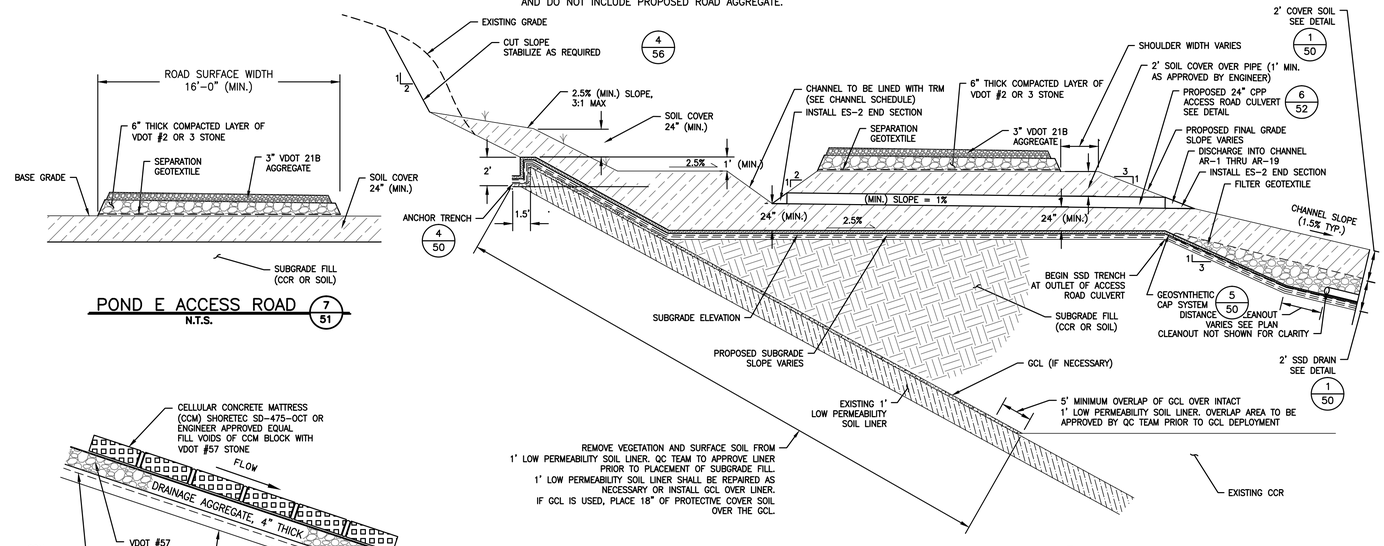

POND D TYPICAL CROSS SECTION WITH DRAINAGE PIPE (5/51)
N.T.S.

POND E ACCESS ROAD (7/51)
N.T.S.

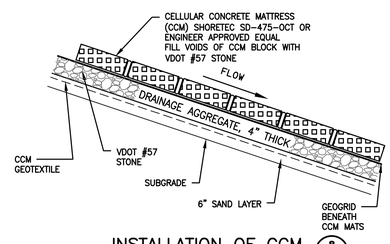

INSTALLATION OF CCM (8/51)
N.T.S.

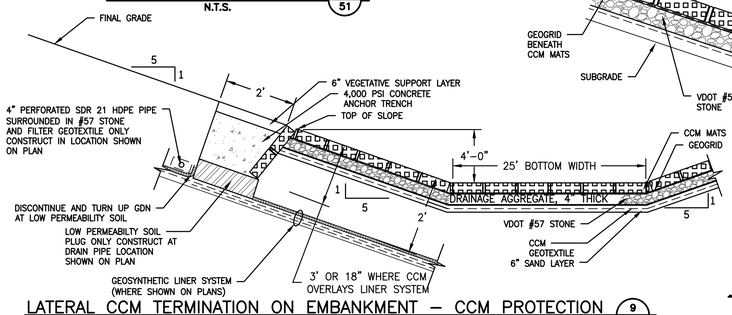

LATERAL CCM TERMINATION ON EMBANKMENT – CCM PROTECTION (9/51)
N.T.S.

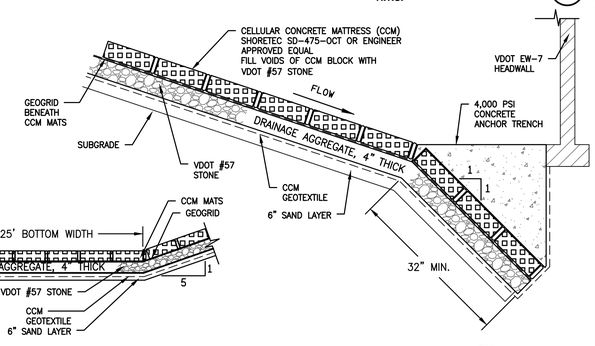

TOE–IN CCM TERMINATION (10/51)
N.T.S.

Culvert Schedule				
Name	Diameter (In)	Length (In)	Invert Elevation In	Invert Elevation Out
AR-1	24	40	116.0	111.2
AR-2	24	40	118.3	115.4
AR-3	24	65	123.5	120.4
AR-4	24	70	130.5	127.0
AR-5	24	75	137.3	134.0
AR-6	24	55	143.8	140.8
AR-7	24	40	148.5	145.3
AR-8	24	65	152.9	149.2
AR-9	24	65	156.5	152.4
AR-11	24	40	154.7	151.6
AR-12	24	40	140.0	136.5
AR-13	24	40	142.0	139.0
AR-14	24	40	138.8	135.2
AR-15	24	40	132.0	129.0
AR-16	24	40	125.1	121.8
AR-17	24	40	119.3	116.3
AR-18	24	40	110.4	107.5
AR-19	24	40	137.2	134.6
D-2	24	40	132.6	129.1
D-3	24	40	144.1	140.7

NO.:	DATE:	DWN:	CHK:	APV:	DESCRIPTION:

REVISION RECORD

This drawing was produced with computer aided drafting technology and is supported by electronic drawing files. Do not revise this drawing as manual drafting methods.

CLIENT
VIRGINIA ELECTRIC AND POWER COMPANY
GLEN ALLEN, VA

gai consultants

DRAWING TITLE
DETAILS - CAP SYSTEM (SHEET 2 OF 2)

PROJECT
POSSUM POINT POWER STATION
COAL COMBUSTION RESIDUAL SURFACE IMPOUNDMENT CLOSURES
DUMFRIES, VA

ISSUING OFFICE: Richmond | 4198 Cox Road, Suite 114, Glen Allen, VA 23060

GAI CAD FILE PATH: Z:\Energy\2015\C150132.00 – PDM – Possum Point PS CCR\CAD\Production\C150132-00-000-C-D1-050.dwg – PLOTTED ON: 11/17/2015 11:44:40 AM – PLOTTED BY: Michael Doyle – PLOT FILE: GAI.ctb

COMMONWEALTH OF VIRGINIA
JOHN R. KLAMUT
Lic. No. 048859
12/7/2015
PROFESSIONAL ENGINEER

DRAWN BY:	CHECKED BY:	APPROVED BY:
CUMMIRM	KUZMKMW	KLAMUJR
DWG TYPE:	SCALE:	ISSUE DATE:
	N.T.S.	12/7/2015

SHEET NO.: 51 OF 65

REVISION

GAI FILE NUMBER: C150132-00-000-C-D1-050

ALT./CLIENT DRAWING NUMBER:

GAI DRAWING NUMBER: 051

PERMIT

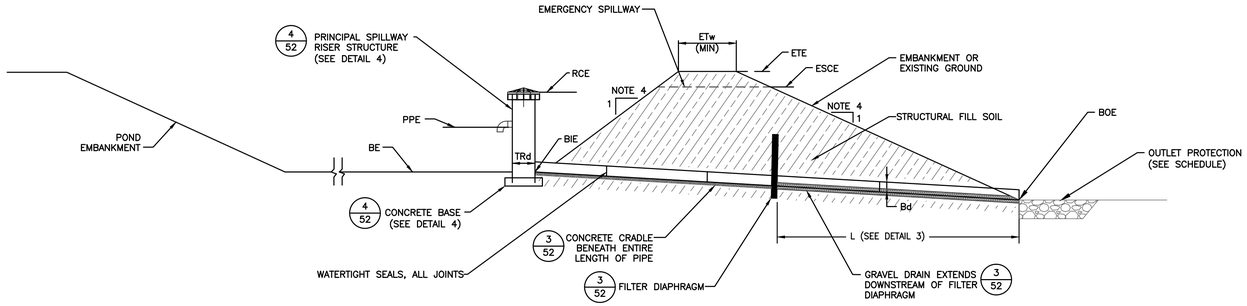

LOCATION	PRINCIPAL SPILLWAY RISER			PRINCIPAL SPILLWAY BARREL					EMBANKMENT				STORAGE DATA					DEWATERING	
	DIA TRd (IN)	RCE (FT)	MATERIAL OF CONSTRUCTION	DIA Bd (IN)	INLET ELEV. BIE (FT)	MATERIAL OF CONSTRUCTION	LENGTH (FT)	OUTLET ELEV. BOE (FT)	TOP ELEV. ETE (FT)	TOP WIDTH ETw (FT)	BOTTOM ELEV. BE (FT)	EMERGENCY SPILLWAY CREST ELEV. ESCE (FT)	CLEAN-OUT ELEV. COE (FT)	PERMANENT POOL ELEV. PPE (FT)	VOLUME AT RCE (AC-FT)	VOLUME AT ESCE (AC-FT)	VOLUME AT ETE (AC-FT)	ORIFICE DIA. (IN)	NO. OF ORIFICES
Basin E-1	48	9.7	SDR 32.5 HDPE	24	7.5	SDR 26 HDPE	105	7	13.5	15	4	11	5.8	7.5	21.5	28.3	46.6	8	3
Basin B-1	24	13	SDR 26 HDPE	12	11	SDR 17 HDPE	70	10	18	6	10	14	11	12	2.7	4.7	20	6	2
Basin C-1 (See Note 1)	24	13	SDR 26 HDPE	12	11	SDR 17 HDPE	70	10	18	6	10	14	11	12	2.0	3.4	14.2	6	2
BORROW AREA 1	36	92	SDR 32.5 HDPE	18	89	SDR 26 HDPE	70	84	95	6	90	N/A	90.5	91	2.2	N/A	6.1	6	2

TEMPORARY SEDIMENTATION POND – TYPICAL SECTION 1/52
N.T.S.

NOTES:

1. IF THE EXISTING POND C SPILLWAY STRUCTURE IS MODIFIED AS SHOWN IN DETAIL 2/52, THEN THE PRINCIPAL SPILLWAY INDICATED IN THIS TABLE IS NOT REQUIRED.
2. THIS DETAIL IS NOT SHOWN TO SCALE AND THE ARRANGEMENT VARIES FOR EACH BASIN. REFER TO THE TABULATED VALUES AND PLAN VIEW DRAWINGS FOR DESIGN ELEVATIONS AND LENGTHS.
3. ORIFICE OPENINGS ARE TO BE LOCATED ON THE OPPOSITE SIDE OF THE RISER FROM THE OUTLET BARREL. A MINIMUM OF 6 INCHES SHALL BE PROVIDED BETWEEN ORIFICE OPENINGS.
4. EMBANKMENT SIDE SLOPE TO BE EXISTING EMBANKMENT SLOPE OR 3H:1V FOR NEWLY CONSTRUCTED OR RECONSTRUCTED SLOPES.

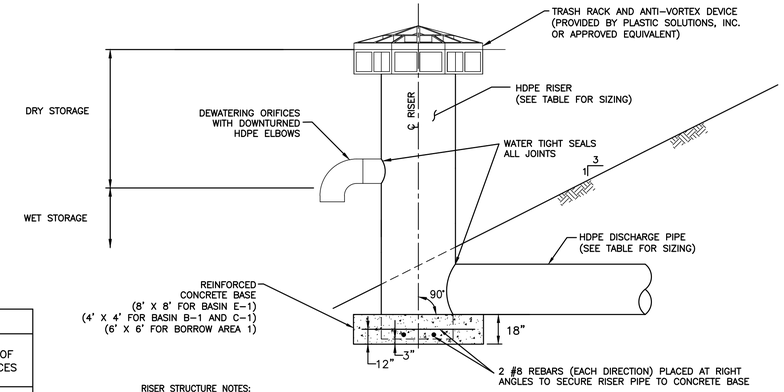

RISER STRUCTURE NOTES:

1. CONTRACTOR SHALL PROVIDE SHOP DRAWING TO THE ENGINEER FOR APPROVAL PRIOR TO ORDERING THE RISER STRUCTURE.
2. CONTRACTOR SHALL PROVIDE SHOP DRAWING OF CONCRETE REINFORCEMENT TO THE ENGINEER FOR APPROVAL .

RISER STRUCTURE 4/52
N.T.S.

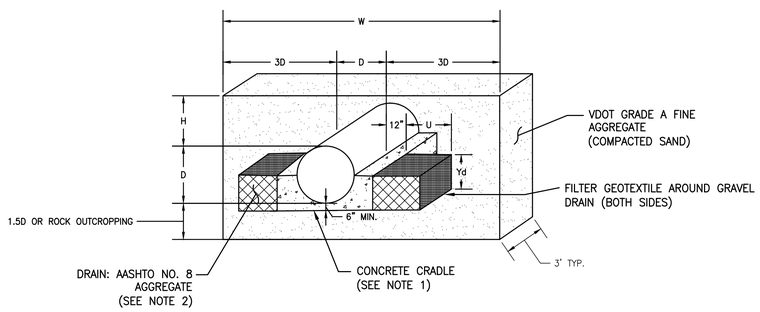

FILTER DIAPHRAGM NOTES:

1. THE CONCRETE CRADLE SHALL SUPPORT THE BARREL FOR ITS ENTIRE LENGTH, FROM THE RISER TO THE OUTLET. MINIMUM COMPRESSIVE STRENGTH FOR THE CONCRETE IS 4,000 PSI.
2. THE GRAVEL DRAIN SHALL BE PROVIDED DOWNSTREAM OF THE SAND FILTER DIAPHRAGM TO THE OUTLET.

FILTER DIAPHRAGM SCHEDULE

BASIN ID	DIAPHRAGM LOCATION, L (FT)	PIPE DIAMETER, D (FT)	DIAPHRAGM WIDTH, W (FT)	HEIGHT, H (FT)	DRAIN WIDTH, U (FT)	DRAIN HEIGHT, Yd (FT)
E-1	22	2	14	3.5	4	0.6
B-1	21	1	7	3	4.5	0.4
C-1	21	1	7	3	4.5	0.4
BORROW AREA 1	40.5	1.5	10.5	4.5	4.25	2.1

FILTER DIAPHRAGM, CONCRETE CRADLE AND GRAVEL DRAIN 3/52
N.T.S.

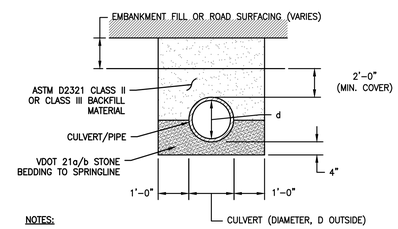

NOTES:

1. 1' MINIMUM CLEARANCE BETWEEN MULTIPLE CULVERTS AND BETWEEN PIPE AND EDGE OF TRENCH.
2. EMBANKMENT AND ROAD SURFACING MATERIAL SHALL MEET PROJECT SPECIFICATIONS.
3. COMPACT 21a/b AND CLASS II/III BACKFILL IN 6" MAXIMUM LIFTS TO 95% OF THE MAXIMUM DRY DENSITY.

TYPICAL HDPE CULVERT AND PIPE TRENCH 6/52
N.T.S.

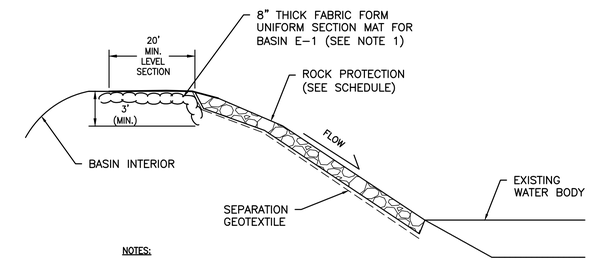

NOTES:

1. FOR BASINS B-1 AND C-1 THE ROCK LINING WILL EXTEND TO THE UPSTREAM END OF THE LEVEL SECTION.

SLOPE PROTECTION SCHEDULE		
LOCATION	ROCK TYPE	PLACEMENT THICKNESS
BASIN E-1	CLASS I	36"
BASIN B-1	CLASS AI	27"
BASIN C-1	CLASS AI	27"

EMERGENCY SPILLWAY SLOPE PROTECTION 5/52
N.T.S.

OUTLET PROTECTION						
LOCATION	DISCHARGE CONDITION	APRON LENGTH (FT)	UPSTREAM WIDTH (FT)	DOWNSTREAM WIDTH (FT)	ROCK CLASS	PLACEMENT THICKNESS (IN)
BASIN E-1 PRINCIPAL SPILLWAY	OPEN AREA	18	6	20	I	36
BASIN B-1 PRINCIPAL SPILLWAY	OPEN AREA	10	3	10	AI	27
BASIN C-1 PRINCIPAL SPILLWAY	OPEN AREA	10	3	10	AI	27
BORROW AREA 1 BASIN	SEE NOTE 2	N/A	N/A	N/A	I	36
CULVERT E-1	DEFINED CHANNEL	26	15	15	I	36
CULVERT B-1	DEFINED CHANNEL	10	7.5	7.5	AI	27
CULVERT B-2	DEFINED CHANNEL	8	7.5	7.5	AI	27

OUTLET PROTECTION NOTES:

1. SEE SHEET 55 FOR TYPICAL PIPE OUTLET CONDITIONS.
2. CULVERT DISCHARGES TO A LOCAL DEPRESSION. INSTALL ROCK ALL AROUND INTERIOR OF DEPRESSION TO ELEV. 86'

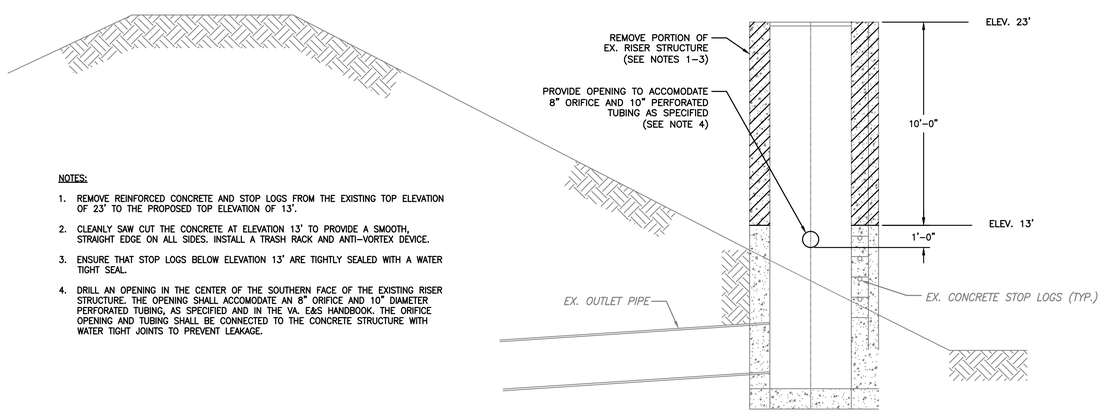

NOTES:

1. REMOVE REINFORCED CONCRETE AND STOP LOGS FROM THE EXISTING TOP ELEVATION OF 23' TO THE PROPOSED TOP ELEVATION OF 13'.
2. CLEANLY SAW CUT THE CONCRETE AT ELEVATION 13' TO PROVIDE A SMOOTH, STRAIGHT EDGE ON ALL SIDES. INSTALL A TRASH RACK AND ANTI-VORTEX DEVICE.
3. ENSURE THAT STOP LOGS BELOW ELEVATION 13' ARE TIGHTLY SEALED WITH A WATER TIGHT SEAL.
4. DRILL AN OPENING IN THE CENTER OF THE SOUTHERN FACE OF THE EXISTING RISER STRUCTURE. THE OPENING SHALL ACCOMODATE AN 8" ORIFICE AND 10" DIAMETER PERFORATED TUBING, AS SPECIFIED AND IN THE VA. E&S HANDBOOK. THE ORIFICE OPENING AND TUBING SHALL BE CONNECTED TO THE CONCRETE STRUCTURE WITH WATER TIGHT JOINTS TO PREVENT LEAKAGE.

MODIFICATION OF EXISTING POND A,B,C RISER STRUCTURE 2/52
N.T.S.

CULVERT SCHEDULE

CULVERT ID	DIAMETER (IN.)	MATERIAL	NO. OF BARRELS	INLET INVERT EL.	INLET HEADWALL	OUTLET INVERT EL.	OUTLET HEADWALL	LENGTH (FT) (SEE NOTE 2)
E-1	42	CPP	3	49	EW-7	46	EW-7	88
B-1	30	CPP	1	24.5	ES-2	23.5	ES-2	50
B-2	30	CPP	1	24	ES-2	23.5	ES-2	50

CULVERT SCHEDULE NOTES:

1. ALL PIPES IDENTIFIED SHALL USE THE SPECIFIED MATERIAL AND TYPE UNLESS APPROVED BY THE OWNER'S REPRESENTATIVE.
2. CULVERT LENGTH LISTED IS HORIZONTAL DIMENSION.

NO.:	DATE:	DWN:	CHK:	APV:	DESCRIPTION:

REVISION RECORD

This drawing was produced with computer aided drafting technology and is supported by electronic drawing files. Do not revise this drawing via manual drafting methods.

DRAWING TITLE
DETAILS - STORMWATER (1 OF 2)

CLIENT
VIRGINIA ELECTRIC AND POWER COMPANY
GLEN ALLEN, VA

gai consultants

PROJECT
POSSUM POINT POWER STATION
COAL COMBUSTION RESIDUAL SURFACE IMPOUNDMENT CLOSURES
DUMFRIES, VA

ISSUING OFFICE: Richmond | 4198 Cox Road, Suite 114, Glen Allen, VA 23060

GAI CAD FILE PATH: Z:\Energy\2015\C150132-00\--DOM -- Possum Point PS\CGR\CAD\Production Drawings\C150132-00--C-D1-052.dwg -- PLOTTED ON: 11/18/2015 9:47:25 AM -- PLOTTED BY: Michael Doyle -- PLOT FILE: GAI.stb

COMMONWEALTH OF VIRGINIA
JOHN R. KLAMUT
Lic. No. 048859
12/7/2015
PROFESSIONAL ENGINEER

DRAWN BY:	CHECKED BY:	APPROVED BY:
DOYLEMP	KINDEKW	KLAMUJR
DWG TYPE:	SCALE:	ISSUE DATE:
	N.T.S.	12/7/2015

SHEET NO.: 52 OF 65

REVISION

GAI FILE NUMBER: C150132-00-000-C-D1-052

ALT./CLIENT DRAWING NUMBER:

GAI DRAWING NUMBER: 052

PERMIT

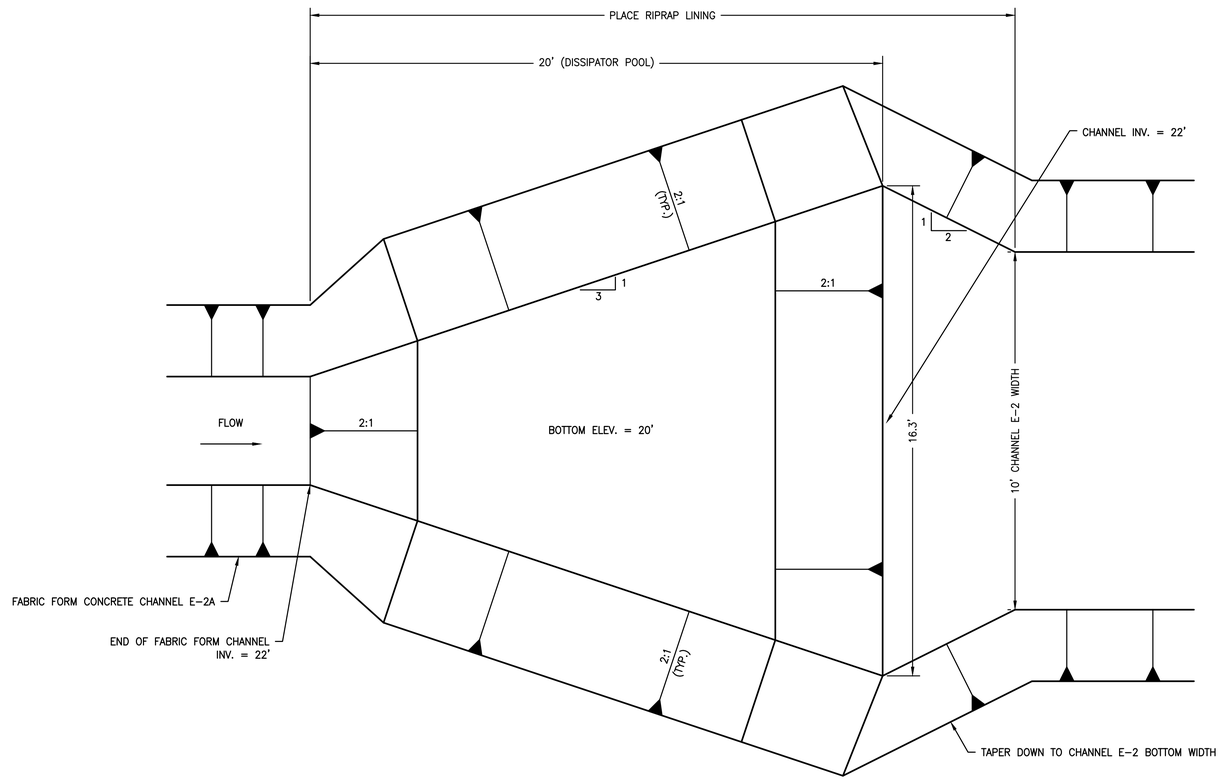

PLAN

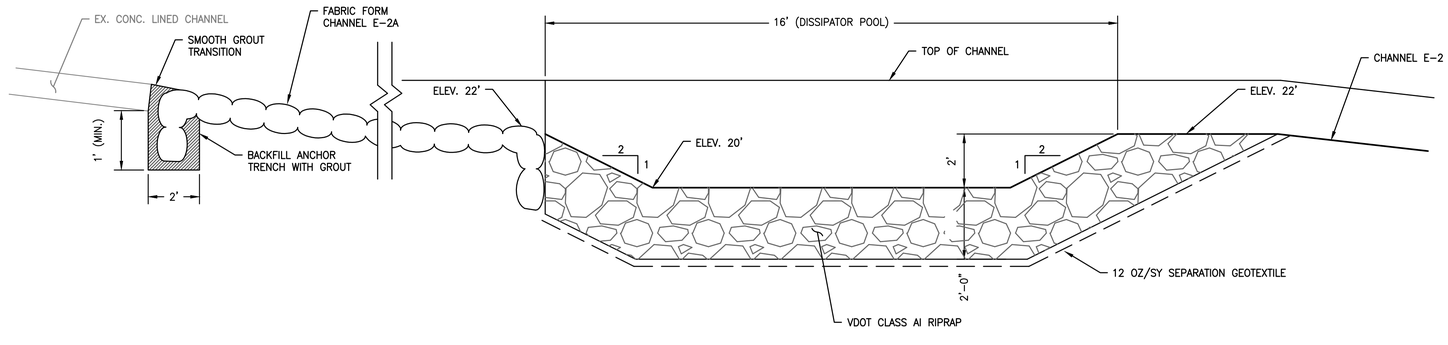

SECTION

ENERGY DISSIPATOR (1/53)
N.T.S.

NO.:	DATE:	DWN:	CHK:	APV:	DESCRIPTION:

REVISION RECORD

This drawing was produced with computer aided drafting technology and is supported by electronic drawing files. Do not revise this drawing via manual drafting methods.

DRAWING TITLE
DETAILS - STORMWATER (2 OF 2)

CLIENT
VIRGINIA ELECTRIC AND POWER COMPANY
GLEN ALLEN, VA

gai consultants

PROJECT
POSSUM POINT POWER STATION
COAL COMBUSTION RESIDUAL SURFACE IMPOUNDMENT CLOSURES
DUMFRIES, VA

ISSUING OFFICE: Richmond | 4198 Cox Road, Suite 114, Glen Allen, VA 23060

GAI CAD FILE PATH: Z:\Energy\2015\C150132.00 - DOM - Possum Point PS CCR\C2D\Production Drawings\C150132-00-000-C-D1-053.dwg PLOTTED ON: 11/18/2015 9:56:00 AM PLOTTED BY: Michael Doyle PLOT FILE: GAI.stb

COMMONWEALTH OF VIRGINIA
JOHN R. KLAMUT
Lic. No. 048859
12/7/2015
PROFESSIONAL ENGINEER

DRAWN BY:	CHECKED BY:	APPROVED BY:
DOYLEMP	KINDEKW	KLAMUJR
DWG TYPE:	SCALE:	ISSUE DATE:
	N.T.S.	12/7/2015
SHEET NO.: 53 OF 65		REVISION

GAI FILE NUMBER: C150132-00-000-C-D1-053

ALT./CLIENT DRAWING NUMBER:

GAI DRAWING NUMBER: 053

PERMIT

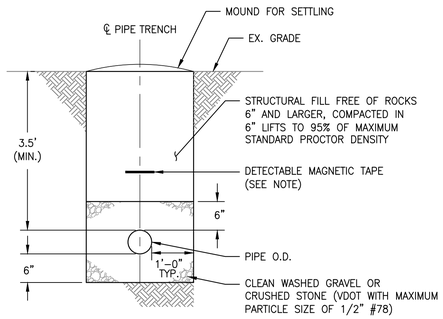

NON-PAVED AREA

NOTES:
1. DETECTABLE TAPE SHALL BE PLACED ONE FOOT ABOVE THE PIPE AND SHALL HAVE A METALLIC CORE PROTECTED BY A PLASTIC JACKET. THE TAPE SHALL BE CONTINUOUSLY MARKED INDICATING THAT A FORCEMAIN IS BURIED. THE TAPE SHALL BE MAGNETIC AND SHALL BE SAFETY GREEN IN COLOR.

STANDARD DETAIL
SEWER PIPE INSTALLATION TRENCH (1/54)
N.T.S.

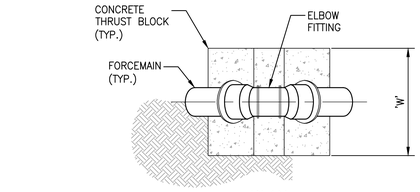

PLAN
N.T.S.

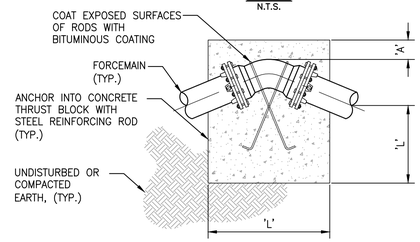

ELEVATION
N.T.S.

NOTES:
1. DUCTILE IRON FITTINGS TO BE POLYETHYLENE WRAPPED PRIOR TO BEDDING AND CONCRETE BLOCK PLACEMENT.
2. CONCRETE STRENGTH 3000 PSI AT 28 DAYS.

DIMENSION SCHEDULE														
PIPE SIZE	PIPE TYPE	11.25° ELBOW				22.5° ELBOW				45° ELBOW			
		'A'	'W'	'L'	ROD Ø	'A'	'W'	'L'	ROD Ø	'A'	'W'	'L'	ROD Ø
4"	PVC	6"	18"	18"	#7	6"	24"	24"	#7	6"	30"	30"	#7

STANDARD DETAIL
CAST-IN-PLACE THRUST BLOCKS
FOR UPPER VERTICAL ELBOW FITTINGS (3/54)
N.T.S.

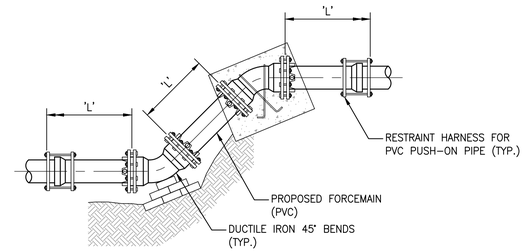

ELEVATION
N.T.S.

RESTRAINED JOINT SCHEDULE - UPPER VERTICAL ELBOW				
PIPE SIZE	PIPE TYPE	11.25° ELBOW	22.5° ELBOW	45° ELBOW
		'L'	'L'	'L'
4"	PVC	4	8	15

RESTRAINED JOINT SCHEDULE - LOWER VERTICAL ELBOW				
PIPE SIZE	PIPE TYPE	11.25° ELBOW	22.5° ELBOW	45° ELBOW
		'L'	'L'	'L'
4"	PVC	2	3	5

NOTES:
1. DIMENSION 'L' REPRESENTS THE LENGTH OF RESTRAINED PIPE REQUIRED IN FEET ON EACH SIDE OF THE PIPE FITTING.
2. THE RESTRAINT REQUIREMENTS ARE BASED ON A SOIL OF CLAY WITH HIGH PLASTICITY, TRENCH TYPE 4 WITH COMPACTED GRANULAR BEDDING AND BACKFILL TO THE TOP OF THE PIPE, A COVER DEPTH OF 3.5 FEET AT UPPER ELBOW AND 5 FEET AT LOWER ELBOW, AND MAXIMUM OPERATING PRESSURE OF 150 PSI.
3. MECHANICAL JOINTS WITH RETAINER GLANDS SHOWN AT FITTINGS. GASKETED, PUSH-ON JOINT PVC FITTINGS WITH RESTRAINT HARNESSES ARE ALSO ACCEPTABLE.

STANDARD DETAIL
RESTRAINED JOINT SCHEDULE FOR VERTICAL FITTINGS (5/54)
N.T.S.

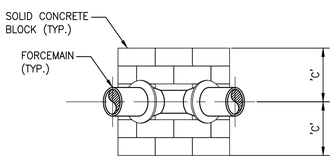

PLAN
N.T.S.

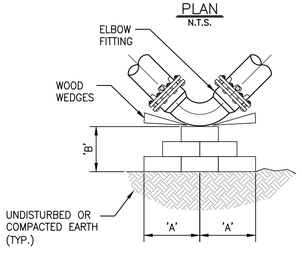

ELEVATION
N.T.S.

NOTES:
1. DUCTILE IRON FITTINGS TO BE POLYETHYLENE WRAPPED PRIOR TO BEDDING AND CONCRETE BLOCK PLACEMENT.

DIMENSION SCHEDULE													
PIPE SIZE	11.25° ELBOW			22.5° ELBOW			45° ELBOW			90° ELBOW			
	'A'	'B'	'C'	'A'	'B'	'C'	'A'	'B'	'C'	'A'	'B'	'C'
4"	6"	6"	6"	8"	8"	6"	11"	11"	8"	12"	12"	12"

STANDARD DETAIL
PRECAST THRUST BLOCKS
FOR LOWER VERTICAL ELBOW FITTINGS (2/54)
N.T.S.

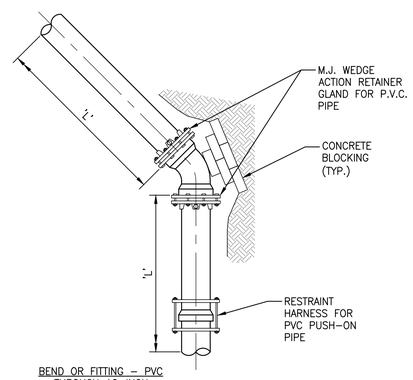

BEND OR FITTING – PVC
THROUGH 10-INCH

RESTRAINED JOINT SCHEDULE					
PIPE SIZE	PIPE TYPE	11.25° ELBOW	22.5° ELBOW	45° ELBOW	TEE BRANCH, 90° BEND, VALVE OR DEAD END
		'L'	'L'	'L'	'L
4"	PVC	2	4	7	36

NOTES:
1. DIMENSION 'L' REPRESENTS THE LENGTH OF RESTRAINED PIPE REQUIRED IN FEET ON EACH SIDE OF THE PIPE FITTING.
2. THE RESTRAINT REQUIREMENTS ARE BASED ON A SOIL OF CLAY WITH HIGH PLASTICITY, TRENCH TYPE 4 WITH COMPACTED GRANULAR BEDDING AND BACKFILL TO THE TOP OF THE PIPE, A COVER DEPTH OF 3.5 FEET, AND MAXIMUM OPERATING PRESSURE OF 150 PSI.
3. MECHANICAL JOINTS WITH RETAINER GLANDS SHOWN AT FITTING. GASKETED, PUSH-ON JOINT PVC FITTINGS WITH RESTRAINT HARNESSES ARE ALSO ACCEPTABLE.

PLAN
N.T.S.

STANDARD DETAIL
RESTRAINED JOINT SCHEDULE FOR HORIZONTAL FITTINGS (4/54)
N.T.S.

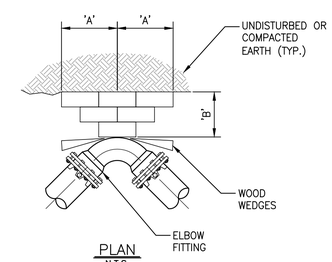

PLAN
N.T.S.

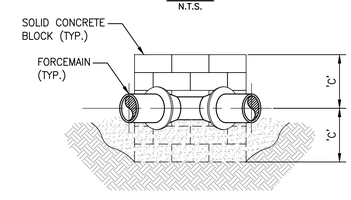

ELEVATION
N.T.S.

NOTES:
1. DUCTILE IRON FITTINGS TO BE POLYETHYLENE WRAPPED PRIOR TO BEDDING AND CONCRETE BLOCK PLACEMENT.

DIMENSION SCHEDULE													
PIPE SIZE	11.25° ELBOW			22.5° ELBOW			45° ELBOW			90° ELBOW			
	'A'	'B'	'C'	'A'	'B'	'C'	'A'	'B'	'C'	'A'	'B'	'C'
4"	6"	6"	4"	8"	8"	6"	11"	11"	8"	12"	12"	12"

STANDARD DETAIL
PRECAST THRUST BLOCKS FOR HORIZONTAL ELBOW FITTINGS (6/54)
N.T.S.

NO.:	DATE:	DWN:	CHK:	APV:	DESCRIPTION:

REVISION RECORD

This drawing was produced with computer aided drafting technology and is supported by electronic drawing files. Do not revise this drawing via manual drafting methods.

DRAWING TITLE
DETAILS - MISCELLANEOUS (SHEET 1 OF 3)

CLIENT
VIRGINIA ELECTRIC AND POWER COMPANY
GLEN ALLEN, VA

gai consultants

PROJECT
POSSUM POINT POWER STATION
COAL COMBUSTION RESIDUAL SURFACE IMPOUNDMENT CLOSURES
DUMFRIES, VA

ISSUING OFFICE: Richmond | 4198 Cox Road, Suite 114, Glen Allen, VA 23060

GAI CAD FILE PATH: Z:\Energy\2015\C150132-00-000-C-D1-054.dwg PLOTTED ON: 11/18/2015 9:51:02 AM PLOTTED BY: Michael Doyle PLOT FILE: GAI.ctb

COMMONWEALTH OF VIRGINIA
JOHN R. KLAMUT
Lic. No. 048859
12/7/2015
PROFESSIONAL ENGINEER

DRAWN BY:	CHECKED BY:	APPROVED BY:
DOYLEMP	KINDEKW	KLAMUJR
DWG TYPE:	SCALE:	ISSUE DATE:
	AS SHOWN	12/7/2015

SHEET NO.: 54 OF 65

REVISION

GAI FILE NUMBER: C150132-00-000-C-D1-054

ALT./CLIENT DRAWING NUMBER:

GAI DRAWING NUMBER: 054

PERMIT

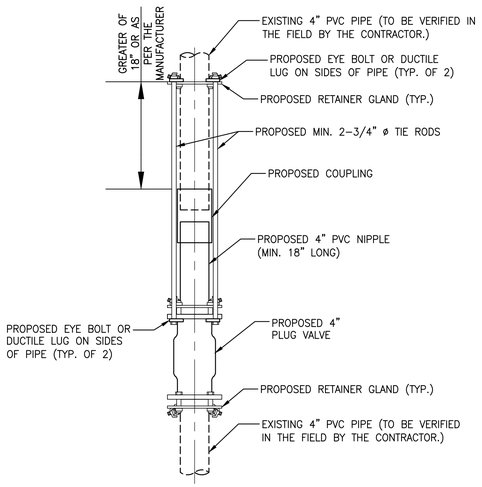

VALVE CUT-IN DETAIL

CUT-IN TO EXISTING FORCEMAIN (1/55)

N.T.S.

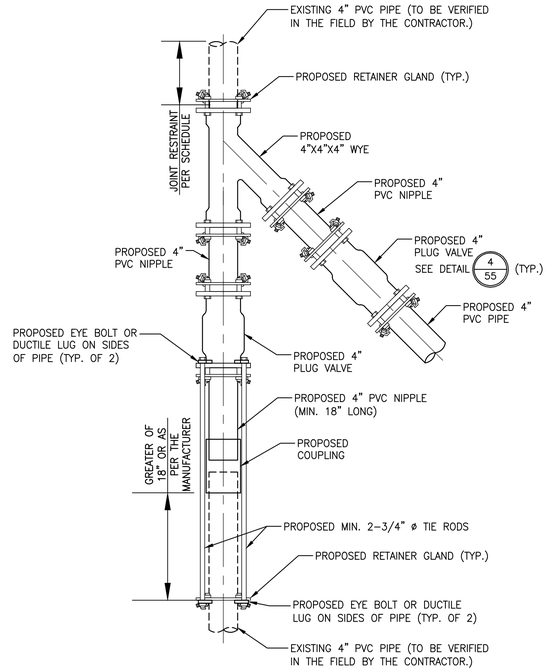

CUT-IN DETAIL 1

CUT-IN TO EXISTING FORCEMAIN (2/55)

N.T.S.

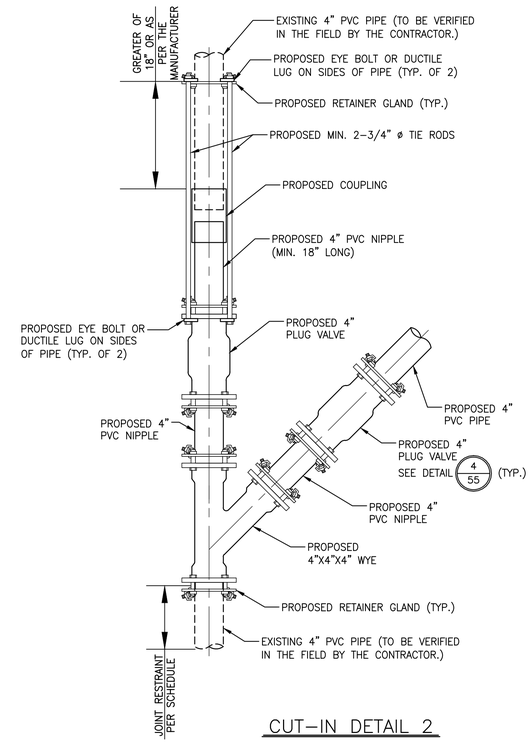

CUT-IN DETAIL 2

CUT-IN TO EXISTING FORCEMAIN (3/55)

N.T.S.

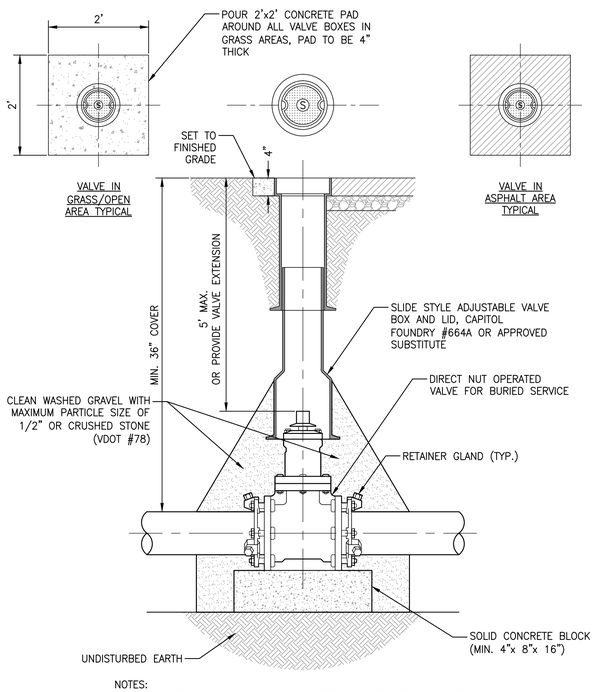

NOTES:

1. VALVES THAT ARE NORMALLY CLOSED, PROVIDE ACCESS INSERT AND PAINT TOP OF VALVE BOX RED.
2. VALVE AND PIPE SHALL HAVE SAME NOMINAL DIAMETER.
3. CONTRACTOR TO PROVIDE "T" WRENCH TO TURN OPERATOR.
4. VALVE SHALL NOT SUPPORT VALVE BOX.

STANDARD DETAIL

VALVE, VALVE BOX, AND COVER (4/55)

N.T.S.

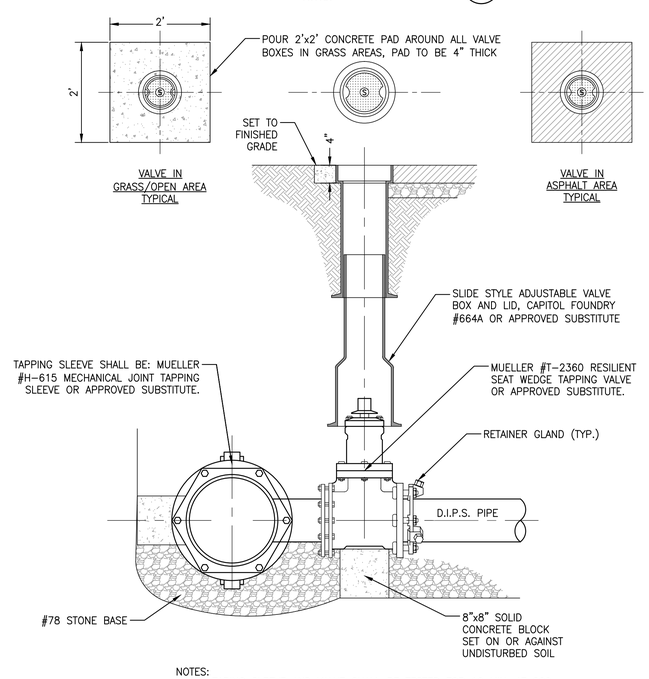

NOTES:

1. TAPING SLEEVE AND VALVE SHALL BE TESTED FOR 10 MIN. AT 200 PSI FOR SIZES 4" THRU 12" PRIOR TO TAPPING MAIN. TAPS LARGER THAN 12" WILL BE TESTED FOR 10 MIN. AT 150 PSI.
2. VALVE EXTENSION REQUIRED WHEN VALVE DEPTH FROM TOP OF OPERATING NUT TO FINISHED GRADE IS 5' OR GREATER.

STANDARD DETAIL

TAPPING SLEEVE & VALVE DETAIL (5/55)

N.T.S.

CUT-IN DETAILS GENERAL NOTES:

1. RESTRAINED COUPLING WITH RETAINER GLANDS IS ALSO ACCEPTABLE.
2. DUCTILE IRON FITTINGS WITH RESTRAINED MECHANICAL JOINTS ARE SHOWN. GASKETED, PUSH-ON JOINT PVC FITTINGS WITH RESTRAINT HARNESSES ARE ALSO ACCEPTABLE.
3. PLUG VALVES SHALL BE RATED FOR BURIED SERVICE AND INCLUDE RESTRAINED MECHANICAL JOINTS.
4. JOINTS ARE TO BE RESTRAINED PER SCHEDULE PRIOR TO CLOSING VALVE.

NO.:	DATE:	DWN:	CHK:	APV:	DESCRIPTION:

REVISION RECORD

This drawing was produced with computer aided drafting technology and is supported by electronic drawing files. Do not revise this drawing via manual drafting methods.

DRAWING TITLE: DETAILS - MISCELLANEOUS (SHEET 2 OF 3)

CLIENT: VIRGINIA ELECTRIC AND POWER COMPANY GLEN ALLEN, VA

PROJECT: POSSUM POINT POWER STATION COAL COMBUSTION RESIDUAL SURFACE IMPOUNDMENT CLOSURES DUMFRIES, VA

gai consultants

ISSUING OFFICE: Richmond | 4198 Cox Road, Suite 114, Glen Allen, VA 23060

GAI CAD FILE PATH: Z:\Energy\2015\C150132.00 - PDM - Possum Point PS CCR\CAD\Production Drawings\C150132-00-000-C-D1-055.dwg - PLOTTED ON: 11/18/2015 9:52:08 AM - PLOTTED BY: Michael Doyle - PLOT FILE: GAI.ctb

COMMONWEALTH OF VIRGINIA
JOHN R. KLAMUT
Lic. No. 048859
12/7/2015
PROFESSIONAL ENGINEER

DRAWN BY:	CHECKED BY:	APPROVED BY:
DOYLEMP	KINDEKW	KLAMUJR
DWG TYPE:	SCALE:	ISSUE DATE:
	AS SHOWN	12/7/2015

SHEET NO.: 55 OF 65

REVISION

GAI FILE NUMBER: C150132-00-000-C-D1-055

ALT./CLIENT DRAWING NUMBER:

GAI DRAWING NUMBER: 055

PERMIT

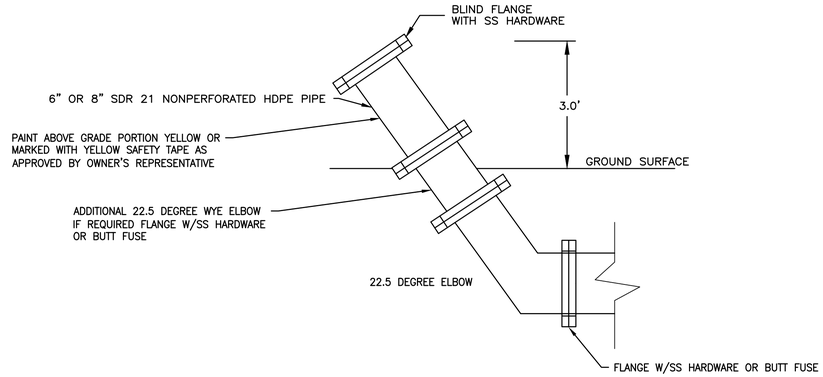

TYPICAL CLEANOUT (1/56)
N.T.S.

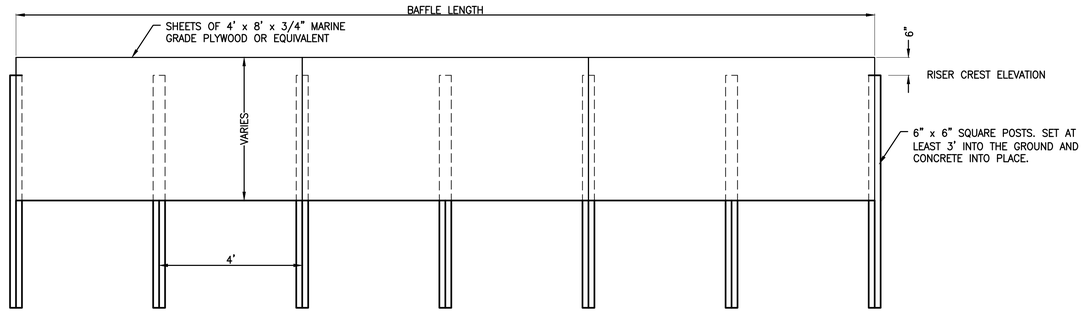

NOTES:
1. PROVIDE GALVANIZED FASTENERS.

SEDIMENT POND BAFFLE (4/56)
N.T.S.

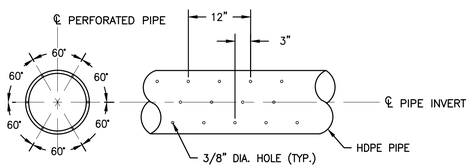

PIPE PERFORATION PATTERNS (2/56)
N.T.S.

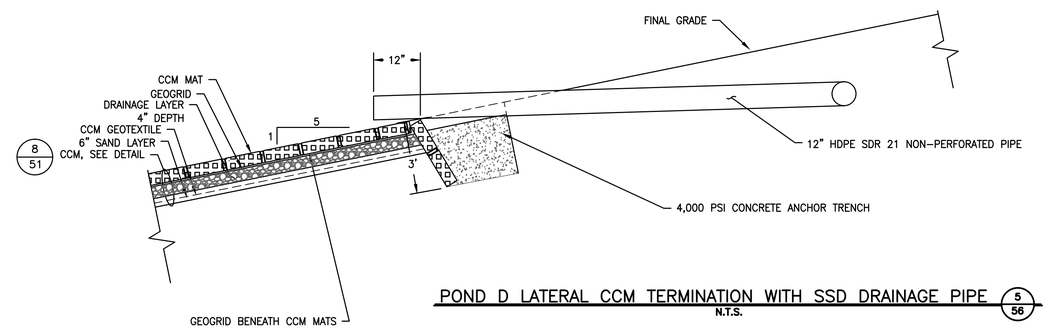

POND D LATERAL CCM TERMINATION WITH SSD DRAINAGE PIPE (5/56)
N.T.S.

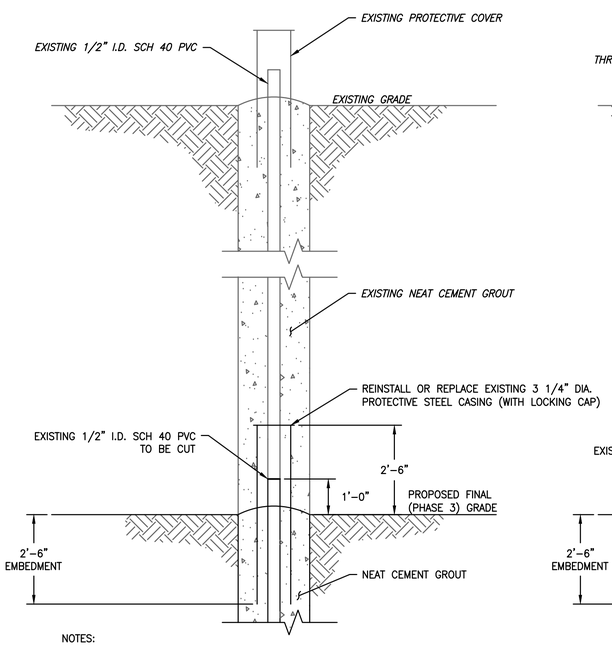

NOTES:

1. REMOVE EXISTING STEEL PROTECTIVE COVER AND NEAT CEMENT GROUT BEING CAREFUL NOT TO DAMAGE OR BEND THE PVC PIEZOMETER CASING.
2. CONTRACTOR SHOULD EXCAVATE MATERIAL BY HAND FROM AROUND THE PIEZOMETER TO AVOID DAMAGING THE CASING.
3. EXISTING PROTECTIVE CASING TO BE SALVAGED AND REINSTALLED OR REPLACED. EMBED PROTECTIVE COVER 30 INCHES IN CEMENT GROUT.

PIEZOMETER MODIFICATION DETAIL (3/56)
N.T.S.

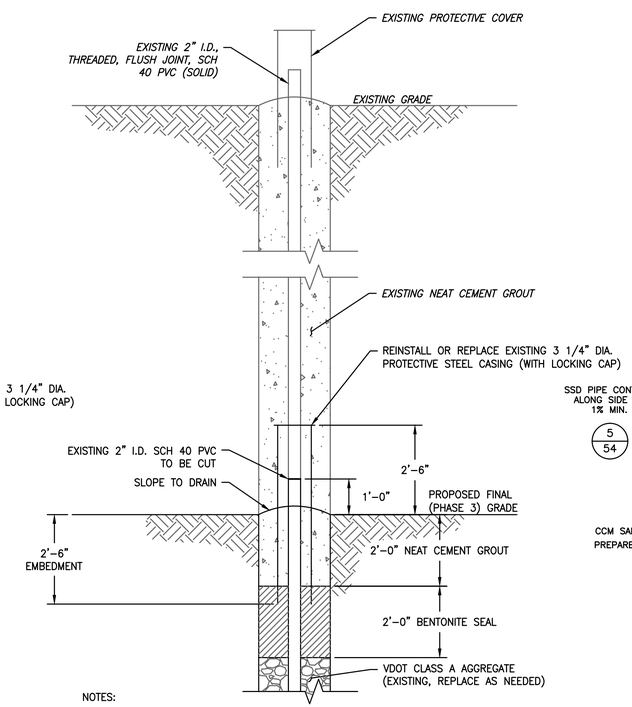

NOTES:

1. REMOVE EXISTING STEEL PROTECTIVE COVER AND NEAT CEMENT GROUT BEING CAREFUL NOT TO DAMAGE OR BEND THE PVC WELL CASING.
2. CONTRACTOR SHOULD EXCAVATE MATERIAL BY HAND FROM AROUND THE WELL TO AVOID DAMAGING THE CASING.
3. EXISTING PROTECTIVE CASING TO BE SALVAGED AND REINSTALLED OR REPLACED. EMBED PROTECTIVE COVER 30 INCHES IN CEMENT GROUT.

OBSERVATION WELL MODIFICATION DETAIL (7/56)
N.T.S.

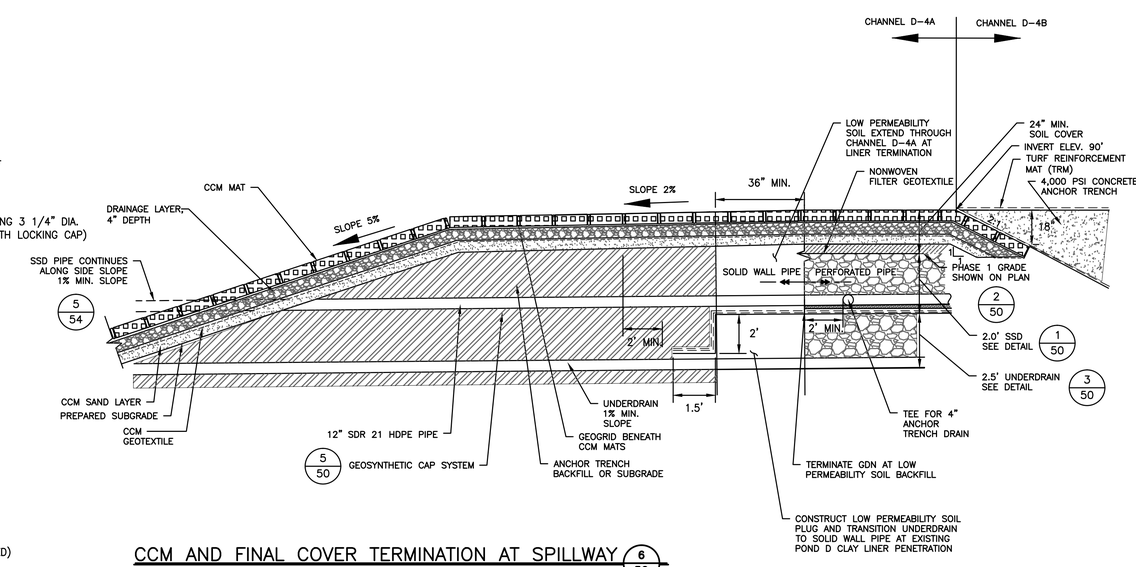

CCM AND FINAL COVER TERMINATION AT SPILLWAY (6/56)
N.T.S.

NO.:	DATE:	DWN:	CHK:	APV:	DESCRIPTION:

REVISION RECORD

This drawing was produced with computer aided drafting technology and is supported by electronic drawing files. Do not revise this drawing via manual drafting methods.

DRAWING TITLE
DETAILS - MISCELLANEOUS (SHEET 3 OF 3)

CLIENT
VIRGINIA ELECTRIC AND POWER COMPANY
GLEN ALLEN, VA

gai consultants

PROJECT
POSSUM POINT POWER STATION
COAL COMBUSTION RESIDUAL SURFACE IMPOUNDMENT CLOSURES
DUMFRIES, VA

ISSUING OFFICE: Richmond | 4198 Cox Road, Suite 114, Glen Allen, VA 23060

GAI CAD FILE PATH: Z:\Energy\2015\C150132.00 - DOM - Possum Point PS CCR\CAD\Production Drawings\C150132-00-000-C-D1-056.dwg PLOTTED ON: 11/18/2015 9:53:57 AM PLOTTED BY: Michael Doyle PLOT FILE: GAI.stb

COMMONWEALTH OF VIRGINIA
JOHN R. KLAMUT
Lic. No. 048859
12/7/2015
PROFESSIONAL ENGINEER

DRAWN BY:	CHECKED BY:	APPROVED BY:
CUMMIRM	KINDEKW	KLAMUJR
DWG TYPE:	SCALE:	ISSUE DATE:
	AS SHOWN	12/7/2015

SHEET NO.: 56 OF 65
REVISION

GAI FILE NUMBER: C150132-00-000-C-D1-056

ALT./CLIENT DRAWING NUMBER:

GAI DRAWING NUMBER: 056

PERMIT

1992 3.02

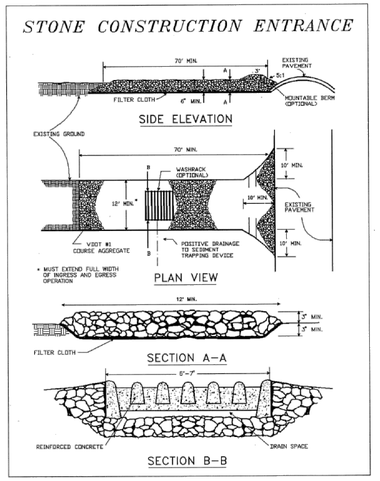

Source: Adapted from 1983 Maryland Standards for Soil Erosion and Sediment Control, and Va. DSWC

Plate 3.02-1

III - 9

Maintenance

The entrance shall be maintained in a condition which will prevent tracking or flow of mud onto public rights-of-way. This may require periodic top dressing with additional stone or the washing and reworking of existing stone as conditions demand and repair and/or cleanout of any structures used to trap sediment. All materials spilled, dropped, washed, or tracked from vehicles onto roadways or into storm drains must be removed immediately. The use of water trucks to remove materials dropped, washed, or tracked onto roadways will not be permitted under any circumstances.

STONE CONSTRUCTION ENTRANCE (1/57) CE
N.T.S.

1992 3.18

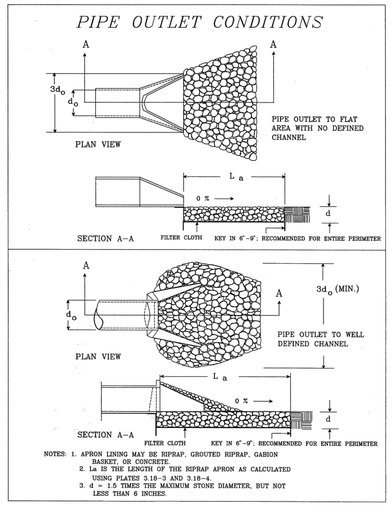

Source: Va. DSWC

Plate 3.18-1

III - 157

PIPE OUTLET PROTECTION (3/57) OP
N.T.S.

1992 3.07

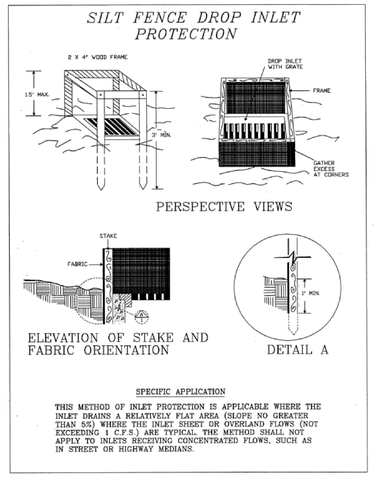

Source: N.C. Erosion and Sediment Control Planning and Design Manual, 1988

Plate 3.07-1

III - 35

Maintenance

1. The structure shall be inspected after each rain and repairs made as needed.
2. Sediment shall be removed and the trap restored to its original dimensions when the sediment has accumulated to one half the design depth of the trap. Removed sediment shall be deposited in a suitable area and in such a manner that it will not erode.
3. Structures shall be removed and the area stabilized when the remaining drainage area has been properly stabilized.

SILT FENCE DROP INLET PROTECTION (5/57) IP
N.T.S.

1992 3.05

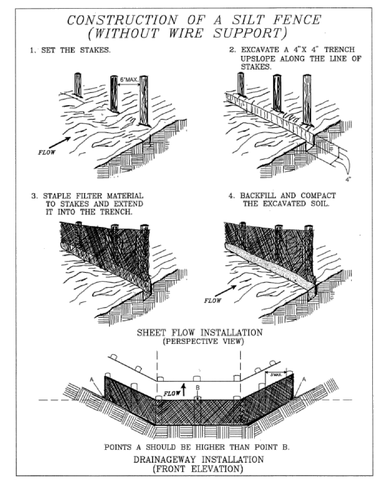

Source: Adapted from Installation of Straw and Fabric Filter Barriers for Sediment Control, Sherwood and Wyant

Plate 3.05-2

III - 25

CONSTRUCTION OF A SILT FENCE WITHOUT WIRE SUPPORT (7/57) SF
N.T.S.

1992 3.36

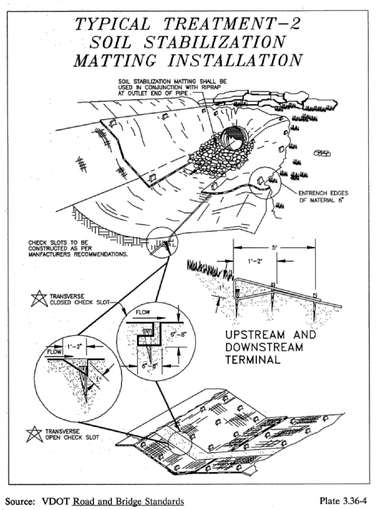

Source: VDOT Road and Bridge Standards

Plate 3.36-4

III - 366

TYPICAL TREATMENT – 2 SOIL STABILIZATION MATTING INSTALLATION (2/57)
N.T.S.

1992 3.36

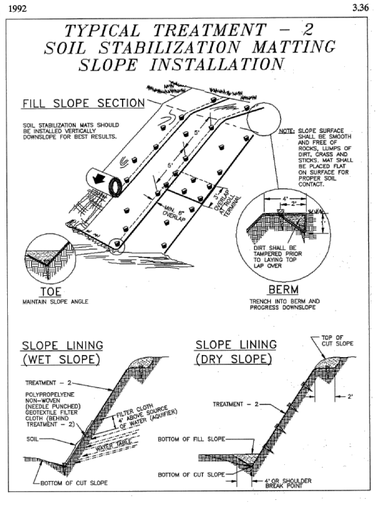

Source: VDOT Road and Bridge Standards

Plate 3.36-5

III - 367

Maintenance

All soil stabilization blankets and matting should be inspected periodically following installation, particularly after rainstorms to check for erosion and undermining. Any dislocation or failure should be repaired immediately. If washouts or breakage occurs, re-install the material after repairing damage to the slope or ditch. Continue to monitor these areas until which time they become permanently stabilized; at that time an annual inspection should be adequate.

TYPICAL TREATMENT – 2 SOIL STABILIZATION SLOPE INSTALLATION (4/57)
N.T.S.

1992 3.09

Height

The minimum allowable height measured from the upslope side of the dike is 18 inches (see Plate 3.09-1).

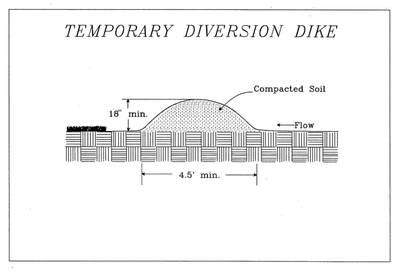

Source: Va. DSWC

Plate 3.09-1

Side Slopes

1½:1 or flatter, along with a minimum base width of 4.5 feet (see Plate 3.09-1).

Grade

The channel behind the dike shall have a positive grade to a stabilized outlet. If the channel slope is less than or equal to 2%, no stabilization is required. If the slope is greater than 2%, the channel shall be stabilized in accordance with Std. & Spec. 3.17, STORMWATER CONVEYANCE CHANNEL.

Outlet

1. The diverted runoff, if free of sediment, must be released through a stabilized outlet or channel.

III - 54

Maintenance

Before final stabilization, the diversion should be inspected after every rainfall and at least once every two weeks. Sediment shall be removed from the channel and repairs made as necessary. Seeded areas which fail to establish a vegetative cover shall be reseeded as necessary.

TEMPORARY DIVERSION DIKE (6/57) DD
N.T.S.

1992 3.05

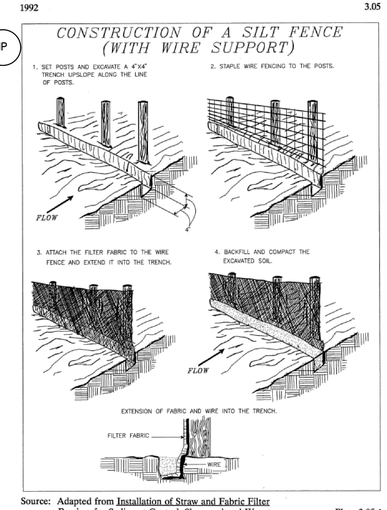

Source: Adapted from Installation of Straw and Fabric Filter Barriers for Sediment Control, Sherwood and Wyant

Plate 3.05-1

III - 24

Maintenance

1. Silt fences shall be inspected immediately after each rainfall and at least daily during prolonged rainfall. Any required repairs shall be made immediately.
2. Close attention shall be paid to the repair of damaged silt fence resulting from end runs and undercutting.
3. Should the fabric on a silt fence decompose or become ineffective prior to the end of the expected usable life and the barrier still be necessary, the fabric shall be replaced promptly.
4. Sediment deposits should be removed after each storm event. They must be removed when deposits reach approximately one-half the height of the barrier.
5. Any sediment deposits remaining in place after the silt fence is no longer required shall be dressed to conform with the existing grade, prepared and seeded.

CONSTRUCTION OF A SILT FENCE WITH WIRE SUPPORT (8/57) SSF
N.T.S.

ROCK CHECK DAM

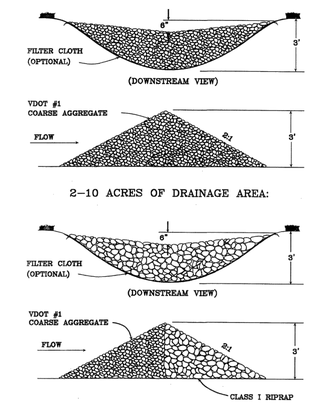

SPACING BETWEEN CHECK DAMS

L = THE DISTANCE SUCH THAT POINTS A AND B ARE OF EQUAL ELEVATION

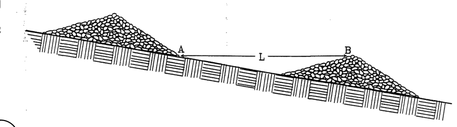

Maintenance

Check dams should be checked for sediment accumulation after each runoff-producing storm event. Sediment should be removed when it reaches one half of the original height of the measure.

Regular inspections should be made to insure that the center of the dam is lower than the edges. Erosion caused by high flows around the edges of the dam should be corrected immediately.

SPACING BETWEEN CHECK DAMS (9/57) CD
N.T.S.

STANDARD CONSTRUCTION DETAIL # 9-5
Earthen Level Spreader

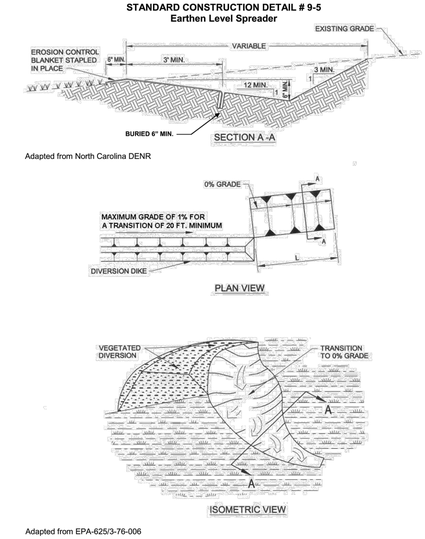

363-2134-008 / March 31, 2012 / Page 254

LEVEL SPREADER (10/57)
N.T.S.

NO.:	DATE:	DWN:	CHK:	APV:	DESCRIPTION:

REVISION RECORD

This drawing was produced with computer aided drafting technology and is supported by electronic drawing files. Do not revise this drawing as manual drafting methods.

DRAWING TITLE
DETAILS - EROSION AND SEDIMENT CONTROL (SHEET 1 OF 2)

CLIENT
VIRGINIA ELECTRIC AND POWER COMPANY
GLEN ALLEN, VA

gai consultants

PROJECT
POSSUM POINT POWER STATION
COAL COMBUSTION RESIDUAL SURFACE IMPOUNDMENT CLOSURES
DUMFRIES, VA

ISSUING OFFICE: Richmond |4198 Cox Road, Suite 114, Glen Allen, VA 23060

GAI CAD FILE PATH: Z:\Energy\2015\C150132-00-000-C-D1-057.dwg — PLOTTED ON: 11/18/2015 10:00:33 AM — PLOTTED BY: Michael Doyle — PLOT FILE: GAI.ctb

COMMONWEALTH OF VIRGINIA
JOHN R. KLAMUT
Lic. No. 048859
12/7/2015
PROFESSIONAL ENGINEER

DRAWN BY:	CHECKED BY:	APPROVED BY:
BRIARS	KINDEKW	KLAMUJR
DWG TYPE:	SCALE:	ISSUE DATE:
	AS SHOWN	12/7/2015

SHEET NO.: 57 OF 65

REVISION

GAI FILE NUMBER: C150132-00-000-C-D1-057

ALT./CLIENT DRAWING NUMBER:

GAI DRAWING NUMBER: 057

PERMIT

EX. POND E OUTLET

METALS POND DRAINAGE = 9.9 AC

MATCHLINE – SEE SHEET 59

METALS POND DIVERSION CHANNEL A DRAINAGE = 1.1 AC

EX. METALS POND "B"

DRAINAGE SUBAREA (TYP.)

EX. METALS POND "A"

METALS POND DIVERSION CHANNEL C DRAINAGE = 4.6 AC

COCKPIT POINT ROAD (RT. 783)

PROPERTY BOUNDARY (APPROX.)

EX. 50'-0" STATE R/W

POSSUM POINT ROAD (RT. 633)

POND E TOTAL DRAINAGE = 104 AC

DRAINAGE AREA (TYP.)

POND D TOTAL DRAINAGE = 115 AC

QUANTICO CREEK

EX. POND A,B,C OUTLET

POND ABC TOTAL DRAINAGE = 36.5 AC

COCKPIT POINT ROAD (RT. 783)

SCALE: 1" = 200'

200 0 200 400

DRAINAGE AREA LEGEND:

DRAINAGE AREA

DRAINAGE SUBAREA

APPROX. FLOW PATH

SOIL DESIGNATION (SOIL TYPE) LEGEND:

16A - DELANCO FINE SANDY LOAM, 0 TO 4 PERCENT SLOPES (TYPE D)
18C - DUMFRIES SANDY LOAM, 7 TO 15 PERCENT SLOPES (TYPE A)
18D - DUMFRIES SANDY LOAM, 15 TO 25 PERCENT SLOPES (TYPE A)
18E - DUMFIRES SANDY LOAM, 25 TO 50 PERCENT SLOPES (TYPE A)
20B - ELSINBORO SANDY LOAM, 2 TO 7 PERCENT SLOPES (TYPE B)
22A - FEATHERSTONE MUCKY SILT LOAM, 0 TO 1 PERCENT SLOPES (TYPE D)
27A - HATBORO-CODORUS COMPLEX, 0 TO 2 PERCENT SLOPES (TYPE D)
34B - LUNT LOAM, 2 TO 7 PERCENT SLOPES (TYPE B)
34C - LUNT LOAM, 7 TO 15 PERCENT SLOPES (TYPE B)
34D - LUNT LOAM, 15 TO 25 PERCENT SLOPES (TYPE B)
36D - MARR VERY FINE SANDY LOAM, 7 TO 25 PERCENT SLOPES (TYPE B)
36E - MARR VERY FINE SANDY LOAM, 25 TO 50 PERCENT SLOPES (TYPE B)
37A - MARUMSCO LOAM, 0 TO 4 PERCENT SLOPES (TYPE D)
41B - NEABSCO LOAM, 0 TO 7 PERCENT SLOPES (TYPE D)
41C - NEABSCO LOAM, 7 TO 15 PERCENT SLOPES (TYPE D)
42B - NEABSCO-QUANTICO COMPLEX, 2 TO 7 PERCENT SLOPES (TYPE D)
47B - QUANTICO SANDY LOAM, 2 TO 7 PERCENT SLOPES (TYPE B)
47C - QUANTICO SANDY LOAM, 7 TO 15 PERCENT SLOPES (TYPE B)
47D - QUANTICO SANDY LOAM, 15 TO 25 PERCENT SLOPES (TYPE B)
54B - URBAN LAND-UDORTHENTS COMPLEX, 0 TO 7 PERCENT SLOPES (N/A)
Ae - ALLUVIAL LAND, WET (N/A)
AwE - AURA-GALESTOWN-SASSAFRAS COMPLEX, 15 TO 30 PERCENT SLOPES (TYPE A)
SfB - SASSAFRAS FINE SANDY LOAM, 2 TO 6 PERCENT SLOPES (TYPE B)
Tm - TIDAL MARSH (N/A)
W - WATER (N/A)

MAPPING REFERENCE:

EXISTING TOPOGRAPHY PREPARED BY KEDDAL AERIAL MAPPING. PHOTOGRAPHY DATED 02-13-2015. VA-N NAD83 (2011) NAVD88 (GEOID 12A) 1 FT. CONTOUR INTERVALS

SUPPLEMENTED BY GROUND SURVEY PERFORMED BY GAI CONSULTANTS, INC. AND FROM INFORMATION PROVIDED BY DOMINION.

ROW AND BOUNDARY SURVEY INFORMATION SHOWN BY GAI CONSULTANTS DATED, 7-27-2015

NO.:	DATE:	DWN:	CHK:	APV:	DESCRIPTION:

REVISION RECORD

This drawing was produced with computer aided drafting technology and is supported by electronic drawing files. Do not revise this drawing via manual drafting methods.

DRAWING TITLE

DRAINAGE AREA MAP - PREDEVELOPMENT (1 OF 2)

CLIENT

VIRGINIA ELECTRIC AND POWER COMPANY
GLEN ALLEN, VA

PROJECT

POSSUM POINT POWER STATION
COAL COMBUSTION RESIDUAL
SURFACE IMPOUNDMENT
CLOSURES
DUMFRIES, VA

gai consultants

ISSUING OFFICE: Richmond | 4198 Cox Road, Suite 114, Glen Allen, VA 23060

GAI CAD FILE PATH: Z:\Energy\2015\C150132.00 - DOM - Possum Point PS CCR\CAD\Production Drawings\C150132-00-000-C-D1-058.dwg - PLOTTED ON: 11/18/2015 10:24:19 AM - PLOTTED BY: Michael Doyle - PLOT FILE: GAI.stb

COMMONWEALTH OF VIRGINIA
JOHN R. KLAMUT
Lic. No. 048859
12/7/2015
PROFESSIONAL ENGINEER

DRAWN BY:	CHECKED BY:	APPROVED BY:
DOYLEMP	KINDEKW	KLAMUJR
DWG TYPE:	SCALE:	ISSUE DATE:
	AS SHOWN	12/7/2015

SHEET NO.: 58 OF 65

REVISION

GAI FILE NUMBER: C150132-00-000-C-D1-058

ALT./CLIENT DRAWING NUMBER:

GAI DRAWING NUMBER: 058

PERMIT

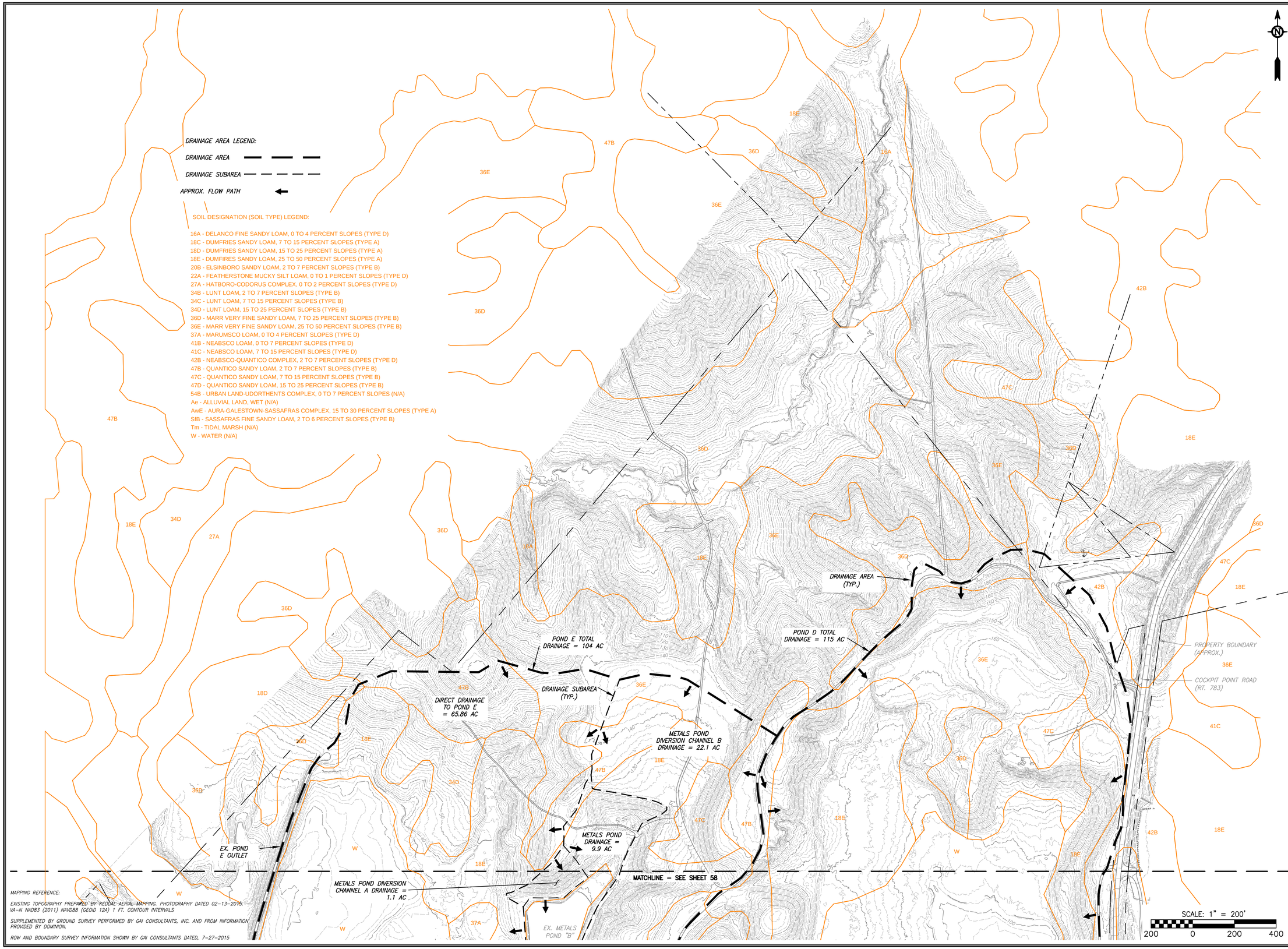

MAPPING REFERENCE:

EXISTING TOPOGRAPHY PREPARED BY KEUDAL AERIAL MAPPING. PHOTOGRAPHY DATED 02-13-2015. VA-N NAD83 (2011) NAVD88 (GEOID 12A) 1 FT. CONTOUR INTERVALS

SUPPLEMENTED BY GROUND SURVEY PERFORMED BY GAI CONSULTANTS, INC. AND FROM INFORMATION PROVIDED BY DOMINION.

ROW AND BOUNDARY SURVEY INFORMATION SHOWN BY GAI CONSULTANTS DATED, 7-27-2015

NO.:	DATE:	DWN:	CHK:	APV:	DESCRIPTION:

REVISION RECORD

This drawing was produced with computer aided drafting technology and is supported by electronic drawing files. Do not revise this drawing via manual drafting methods.

DRAWING TITLE

DRAINAGE AREA MAP - PREDEVELOPMENT (2 OF 2)

PROJECT

POSSUM POINT POWER STATION
COAL COMBUSTION RESIDUAL SURFACE IMPOUNDMENT CLOSURES
DUMFRIES, VA

CLIENT

VIRGINIA ELECTRIC AND POWER COMPANY
GLEN ALLEN, VA

gai consultants

ISSUING OFFICE: Richmond | 4198 Cox Road, Suite 114, Glen Allen, VA 23060

GAI CAD FILE PATH: Z:\Energy\2015\C150132\00-000 - POM - Possum Point PS-CCR\CAD\Production Drawings\C150132-00-000-C-D1-058.dwg - PLOTTED ON: 11/18/2015 10:24:48 AM - PLOTTED BY: Michael Doyle - PLOT FILE: GAI.ctb

COMMONWEALTH OF VIRGINIA
JOHN R. KLAMUT
Lic. No. 048859
12/7/2015
PROFESSIONAL ENGINEER

DRAWN BY:	CHECKED BY:	APPROVED BY:
DOYLEMP	KINDEKW	KLAMUJR
DWG TYPE:	SCALE:	ISSUE DATE:
	AS SHOWN	12/7/2015

SHEET NO.: **59 OF 65**

REVISION

GAI FILE NUMBER: **C150132-00-000-C-D1-058**

ALT./CLIENT DRAWING NUMBER:

GAI DRAWING NUMBER: **059**

PERMIT

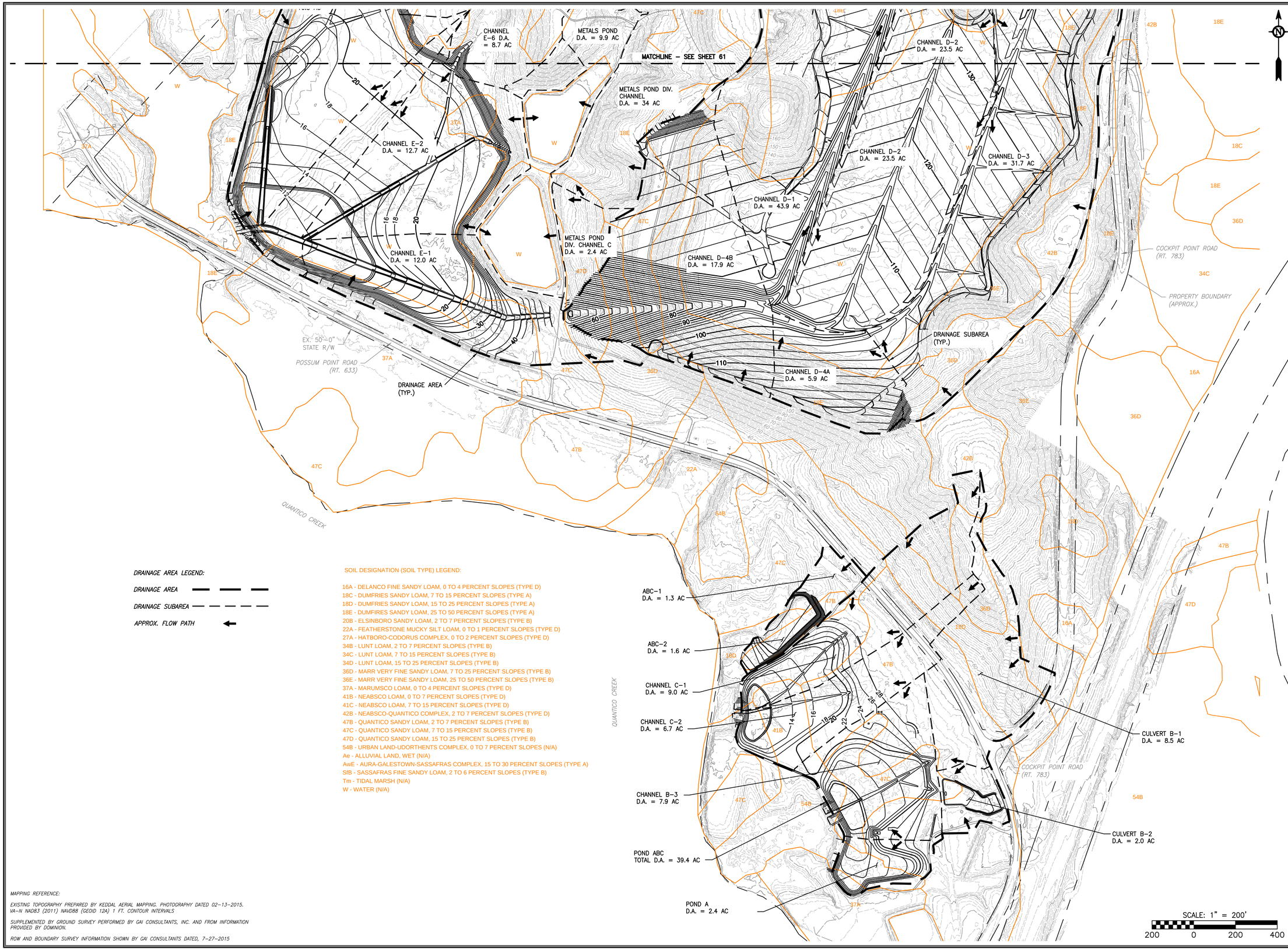

DRAINAGE AREA LEGEND:

DRAINAGE AREA

DRAINAGE SUBAREA

APPROX. FLOW PATH

SOIL DESIGNATION (SOIL TYPE) LEGEND:

16A - DELANCO FINE SANDY LOAM, 0 TO 4 PERCENT SLOPES (TYPE D)
18C - DUMFRIES SANDY LOAM, 7 TO 15 PERCENT SLOPES (TYPE A)
18D - DUMFRIES SANDY LOAM, 15 TO 25 PERCENT SLOPES (TYPE A)
18E - DUMFIRES SANDY LOAM, 25 TO 50 PERCENT SLOPES (TYPE A)
20B - ELSINBORO SANDY LOAM, 2 TO 7 PERCENT SLOPES (TYPE B)
22A - FEATHERSTONE MUCKY SILT LOAM, 0 TO 1 PERCENT SLOPES (TYPE D)
27A - HATBORO-CODORUS COMPLEX, 0 TO 2 PERCENT SLOPES (TYPE D)
34B - LUNT LOAM, 2 TO 7 PERCENT SLOPES (TYPE B)
34C - LUNT LOAM, 7 TO 15 PERCENT SLOPES (TYPE B)
34D - LUNT LOAM, 15 TO 25 PERCENT SLOPES (TYPE B)
36D - MARR VERY FINE SANDY LOAM, 7 TO 25 PERCENT SLOPES (TYPE B)
36E - MARR VERY FINE SANDY LOAM, 25 TO 50 PERCENT SLOPES (TYPE B)
37A - MARUMSCO LOAM, 0 TO 4 PERCENT SLOPES (TYPE D)
41B - NEABSCO LOAM, 0 TO 7 PERCENT SLOPES (TYPE D)
41C - NEABSCO LOAM, 7 TO 15 PERCENT SLOPES (TYPE D)
42B - NEABSCO-QUANTICO COMPLEX, 2 TO 7 PERCENT SLOPES (TYPE D)
47B - QUANTICO SANDY LOAM, 2 TO 7 PERCENT SLOPES (TYPE B)
47C - QUANTICO SANDY LOAM, 7 TO 15 PERCENT SLOPES (TYPE B)
47D - QUANTICO SANDY LOAM, 15 TO 25 PERCENT SLOPES (TYPE B)
54B - URBAN LAND-UDORTHENTS COMPLEX, 0 TO 7 PERCENT SLOPES (N/A)
Ae - ALLUVIAL LAND, WET (N/A)
AwE - AURA-GALESTOWN-SASSAFRAS COMPLEX, 15 TO 30 PERCENT SLOPES (TYPE A)
SfB - SASSAFRAS FINE SANDY LOAM, 2 TO 6 PERCENT SLOPES (TYPE B)
Tm - TIDAL MARSH (N/A)
W - WATER (N/A)

MAPPING REFERENCE:

EXISTING TOPOGRAPHY PREPARED BY KEDDAL AERIAL MAPPING. PHOTOGRAPHY DATED 02-13-2015. VA-N NAD83 (2011) NAVD88 (GEOID 12A) 1 FT. CONTOUR INTERVALS

SUPPLEMENTED BY GROUND SURVEY PERFORMED BY GAI CONSULTANTS, INC. AND FROM INFORMATION PROVIDED BY DOMINION.

ROW AND BOUNDARY SURVEY INFORMATION SHOWN BY GAI CONSULTANTS DATED, 7-27-2015

NO.:	DATE:	DWN:	CHK:	APV:	DESCRIPTION:

REVISION RECORD

This drawing was produced with computer aided drafting technology and is supported by electronic drawing files. Do not revise this drawing via manual drafting methods.

DRAWING TITLE

DRAINAGE AREA MAP POST-DEVELOPMENT (1 OF 2)

PROJECT

POSSUM POINT POWER STATION COAL COMBUSTION RESIDUAL SURFACE IMPOUNDMENT CLOSURES DUMFRIES, VA

CLIENT

VIRGINIA ELECTRIC AND POWER COMPANY GLEN ALLEN, VA

gai consultants

ISSUING OFFICE: Richmond | 4198 Cox Road, Suite 114, Glen Allen, VA 23060

GAI CAD FILE PATH: Z:\Energy\2015\C150132-00-000 - PDM - Possum Point PS CCR\CAD\Production Drawings\C150132-00-000-C-D1-060.dwg PLOTTED ON: 11/18/2015 10:16:06 AM PLOTTED BY: Michael Doyle PLOT FILE: GAI.ctb

COMMONWEALTH OF VIRGINIA
JOHN R. KLAMUT
Lic. No. 048859
12/7/2015
PROFESSIONAL ENGINEER

DRAWN BY:	CHECKED BY:	APPROVED BY:
DOYLEMP	KINDEKW	KLAMUJR
DWG TYPE:	SCALE:	ISSUE DATE:
	AS SHOWN	12/7/2015

SHEET NO.: **60 OF 65**

REVISION

GAI FILE NUMBER: **C150132-00-000-C-D1-060**

ALT./CLIENT DRAWING NUMBER:

GAI DRAWING NUMBER: **060**

PERMIT

DRAINAGE AREA LEGEND:

DRAINAGE AREA

DRAINAGE SUBAREA

APPROX. FLOW PATH

SOIL DESIGNATION (SOIL TYPE) LEGEND:

16A - DELANCO FINE SANDY LOAM, 0 TO 4 PERCENT SLOPES (TYPE D)
18C - DUMFRIES SANDY LOAM, 7 TO 15 PERCENT SLOPES (TYPE A)
18D - DUMFRIES SANDY LOAM, 15 TO 25 PERCENT SLOPES (TYPE A)
18E - DUMFIRES SANDY LOAM, 25 TO 50 PERCENT SLOPES (TYPE A)
20B - ELSINBORO SANDY LOAM, 2 TO 7 PERCENT SLOPES (TYPE B)
22A - FEATHERSTONE MUCKY SILT LOAM, 0 TO 1 PERCENT SLOPES (TYPE D)
27A - HATBORO-CODORUS COMPLEX, 0 TO 2 PERCENT SLOPES (TYPE D)
34B - LUNT LOAM, 2 TO 7 PERCENT SLOPES (TYPE B)
34C - LUNT LOAM, 7 TO 15 PERCENT SLOPES (TYPE B)
34D - LUNT LOAM, 15 TO 25 PERCENT SLOPES (TYPE B)
36D - MARR VERY FINE SANDY LOAM, 7 TO 25 PERCENT SLOPES (TYPE B)
36E - MARR VERY FINE SANDY LOAM, 25 TO 50 PERCENT SLOPES (TYPE B)
37A - MARUMSCO LOAM, 0 TO 4 PERCENT SLOPES (TYPE D)
41B - NEABSCO LOAM, 0 TO 7 PERCENT SLOPES (TYPE D)
41C - NEABSCO LOAM, 7 TO 15 PERCENT SLOPES (TYPE D)
42B - NEABSCO-QUANTICO COMPLEX, 2 TO 7 PERCENT SLOPES (TYPE D)
47B - QUANTICO SANDY LOAM, 2 TO 7 PERCENT SLOPES (TYPE B)
47C - QUANTICO SANDY LOAM, 7 TO 15 PERCENT SLOPES (TYPE B)
47D - QUANTICO SANDY LOAM, 15 TO 25 PERCENT SLOPES (TYPE B)
54B - URBAN LAND-UDORTHENTS COMPLEX, 0 TO 7 PERCENT SLOPES (N/A)
Ae - ALLUVIAL LAND, WET (N/A)
AwE - AURA-GALESTOWN-SASSAFRAS COMPLEX, 15 TO 30 PERCENT SLOPES (TYPE A)
SfB - SASSAFRAS FINE SANDY LOAM, 2 TO 6 PERCENT SLOPES (TYPE B)
Tm - TIDAL MARSH (N/A)
W - WATER (N/A)

POND E TOTAL
DA = 110.6 AC

POND D TOTAL
D.A. = 123 AC

BORROW AREA / PROPOSED GRADING NOT SHOWN

DRAINAGE AREA (TYP.)

DRAINAGE SUBAREA (TYP.)

CHANNEL E-4 D.A. = 3.6 AC

CHANNEL E-5 D.A. = 3.8 AC

CHANNEL E-3 D.A. = 16.5 AC

CHANNEL E-6 D.A. = 8.7 AC

METALS POND D.A. = 9.9 AC

METALS POND DIV. CHANNEL D.A. = 34 AC

CHANNEL D-1 D.A. = 43.9 AC

CHANNEL D-2 D.A. = 23.5 AC

CHANNEL D-3 D.A. = 31.7 AC

PROPERTY BOUNDARY (APPROX.)

COCKPIT POINT ROAD (RT. 783)

MATCHLINE – SEE SHEET 60

SCALE: 1" = 200'

200 0 200 400

MAPPING REFERENCE:

EXISTING TOPOGRAPHY PREPARED BY KEUDAL AERIAL MAPPING. PHOTOGRAPHY DATED 02-13-2015. VA-N NAD83 (2011) NAVD88 (GEOID 12A) 1 FT. CONTOUR INTERVALS

SUPPLEMENTED BY GROUND SURVEY PERFORMED BY GAI CONSULTANTS, INC. AND FROM INFORMATION PROVIDED BY DOMINION.

ROW AND BOUNDARY SURVEY INFORMATION SHOWN BY GAI CONSULTANTS DATED, 7-27-2015

NO.:	DATE:	DWN:	CHK:	APV:	DESCRIPTION:

REVISION RECORD

This drawing was produced with computer aided drafting technology and is supported by electronic drawing files. Do not revise this drawing via manual drafting methods.

DRAWING TITLE

DRAINAGE AREA MAP POST-DEVELOPMENT (2 OF 2)

PROJECT

POSSUM POINT POWER STATION
COAL COMBUSTION RESIDUAL
SURFACE IMPOUNDMENT
CLOSURES
DUMFRIES, VA

CLIENT

VIRGINIA ELECTRIC AND
POWER COMPANY
GLEN ALLEN, VA

gai consultants

ISSUING OFFICE: Richmond | 4198 Cox Road, Suite 114, Glen Allen, VA 23060

GAI CAD FILE PATH: Z:\Energy\2015\C150132-00--DOM - Possum Point PS-CCR\CAD\Production Drawings\C150132-00-000-C-D1-060.dwg - PLOTTED ON: 11/18/2015 10:16:55 AM - PLOTTED BY: Michael Doyle - PLOT FILE: GAI.ctb

COMMONWEALTH OF VIRGINIA
JOHN R. KLAMUT
Lic. No. 048859
12/7/2015
PROFESSIONAL ENGINEER

DRAWN BY:	CHECKED BY:	APPROVED BY:
DOYLEMP	KINDEKW	KLAMUJR
DWG TYPE:	SCALE:	ISSUE DATE:
	AS SHOWN	12/7/2015

SHEET NO.: 61 OF 65

REVISION

GAI FILE NUMBER: C150132-00-000-C-D1-060

ALT./CLIENT DRAWING NUMBER:

GAI DRAWING NUMBER: 061

PERMIT

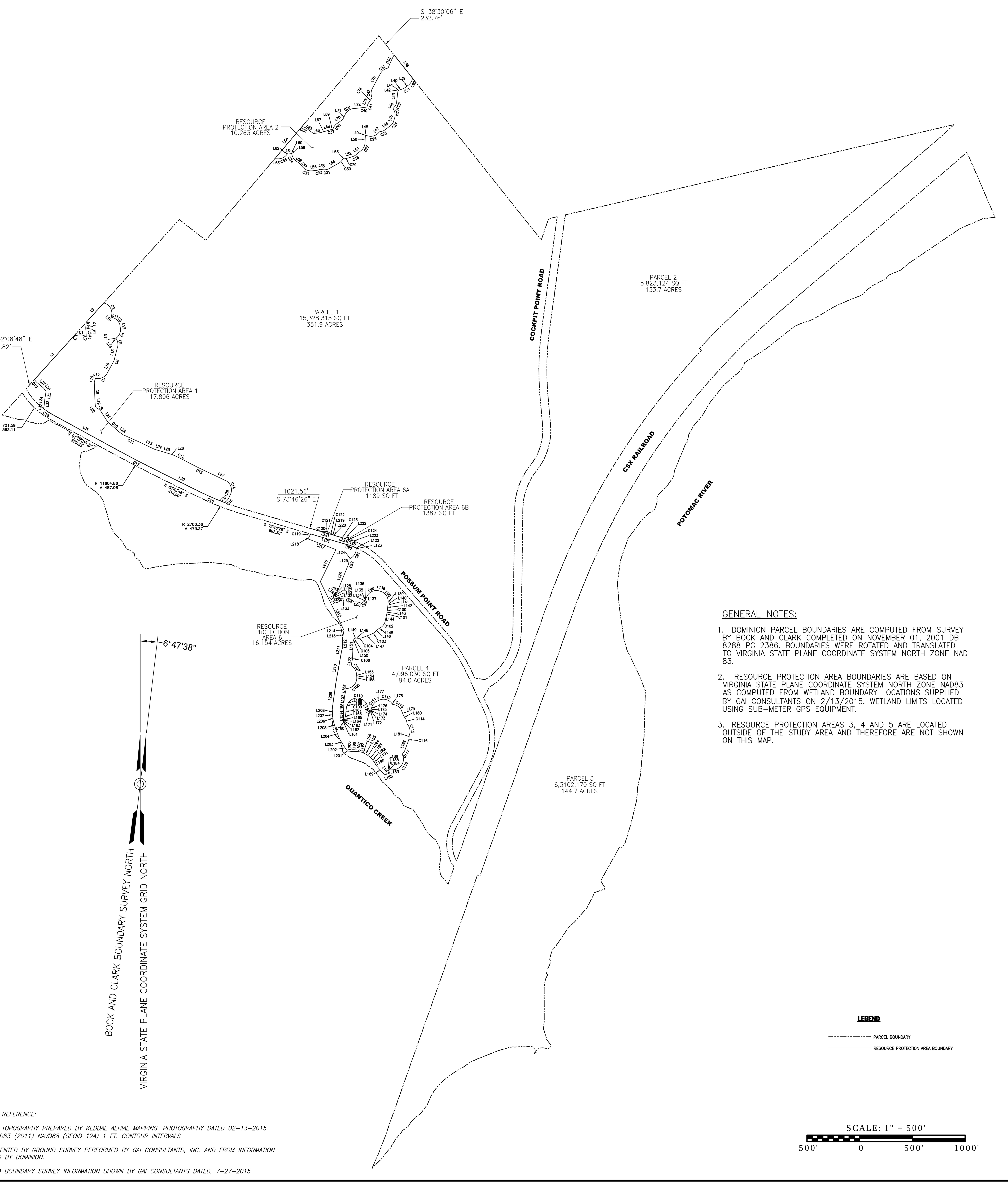

GENERAL NOTES:

1. DOMINION PARCEL BOUNDARIES ARE COMPUTED FROM SURVEY BY BOCK AND CLARK COMPLETED ON NOVEMBER 01, 2001 DB 8288 PG 2386. BOUNDARIES WERE ROTATED AND TRANSLATED TO VIRGINIA STATE PLANE COORDINATE SYSTEM NORTH ZONE NAD 83.
2. RESOURCE PROTECTION AREA BOUNDARIES ARE BASED ON VIRGINIA STATE PLANE COORDINATE SYSTEM NORTH ZONE NAD83 AS COMPUTED FROM WETLAND BOUNDARY LOCATIONS SUPPLIED BY GAI CONSULTANTS ON 2/13/2015. WETLAND LIMITS LOCATED USING SUB-METER GPS EQUIPMENT.
3. RESOURCE PROTECTION AREAS 3, 4 AND 5 ARE LOCATED OUTSIDE OF THE STUDY AREA AND THEREFORE ARE NOT SHOWN ON THIS MAP.

MAPPING REFERENCE:

EXISTING TOPOGRAPHY PREPARED BY KEDDAL AERIAL MAPPING. PHOTOGRAPHY DATED 02-13-2015.
VA-N NAD83 (2011) NAVD88 (GEOID 12A) 1 FT. CONTOUR INTERVALS

SUPPLEMENTED BY GROUND SURVEY PERFORMED BY GAI CONSULTANTS, INC. AND FROM INFORMATION PROVIDED BY DOMINION.

ROW AND BOUNDARY SURVEY INFORMATION SHOWN BY GAI CONSULTANTS DATED, 7-27-2015

LINE	BEARING	DISTANCE
L1	N 42°08'48" E	573.78'
L2	S 38°46'27" E	12.99'
L3	S 54°13'41" E	7.64'
L4	N 25°05'31" E	0.37'
L5	N 03°36'57" W	76.98'
L6	N 00°04'01" E	12.85'
L7	N 04°40'01" E	3.20'
L8	N 05°35'03" E	45.07'
L9	N 42°08'48" E	247.12'
L10	S 42°50'30" E	5.43'
L11	S 69°17'41" E	17.39'
L12	S 09°17'39" E	16.41'
L13	S 01°49'18" W	0.50'
L14	S 34°26'16" E	2.91'
L15	S 14°30'43" W	120.73'
L16	S 28°51'35" W	121.61'
L17	N 76°52'30" W	3.67'
L18	S 19°05'37" W	35.37'
L19	S 05°43'39" E	40.47'
L20	S 32°25'30" E	19.56'
L21	S 33°04'45" E	117.77'
L22	S 55°41'39" E	53.97'
L23	S 64°26'02" E	150.37'
L24	S 73°23'54" E	60.43'
L25	S 73°21'34" E	100.97'
L26	S 70°58'28" E	8.32'
L27	S 64°20'59" E	120.33'
L28	S 24°12'29" W	32.85'
L29	S 61°43'27" W	7.33'
L30	N 63°43'48" W	414.90'
L31	N 61°19'31" W	679.53'
L32	N 15°15'19" E	20.36'
L33	N 05°42'38" E	60.06'
L34	N 07°13'42" E	5.30'
L35	N 08°44'46" E	80.29'
L36	N 36°52'12" W	38.88'
L37	N 50°22'36" W	79.48'
L38	S 38°30'06" E	279.86'
L39	S 61°52'30" W	4.65'
L40	S 70°44'11" W	39.03'
L41	S 31°19'01" W	2.74'
L42	S 32°06'04" W	12.90'
L43	S 06°32'55" W	93.77'
L44	S 39°13'33" W	21.07'
L45	S 16°28'33" W	25.62'
L46	S 52°56'39" W	57.34'
L47	S 45°46'36" W	21.38'
L48	N 67°49'59" W	12.96'
L49	S 01°43'54" W	4.66'
L50	S 03°27'48" W	71.65'
L51	S 50°35'15" W	62.62'
L52	S 73°00'45" W	52.46'
L53	S 84°19'02" W	21.03'
L54	S 60°44'36" W	100.29'
L55	N 81°02'42" W	26.33'
L56	S 84°15'41" W	38.91'
L57	N 40°03'42" W	45.70'
L58	N 55°25'01" W	39.17'
L59	N 09°25'34" W	6.75'
L60	N 85°21'46" W	5.25'
L61	N 83°17'49" W	28.29'
L62	S 41°40'15" W	28.67'
L63	N 87°45'12" W	29.69'
L64	N 40°14'23" E	398.32'
L65	S 53°14'51" E	76.88'
L66	N 83°18'41" E	69.04'
L67	N 73°17'17" E	59.80'
L68	N 73°17'17" E	26.32'
L69	N 86°44'23" E	9.55'
L70	N 54°54'34" E	67.38'
L71	N 25°43'17" E	51.78'
L72	N 84°00'44" E	84.67'
L73	N 29°44'55" E	14.64'
L74	N 33°56'43" E	56.13'
L75	N 28°47'24" E	161.99'
L76	S 43°40'26" W	103.80'
L77	N 40°12'38" W	32.26'
L78	N 45°03'00" W	18.79'
L79	N 61°52'30" W	1.39'
L80	N 49°47'16" W	31.06'
L81	N 40°07'04" W	9.44'
L82	N 18°03'59" E	3.93'
L83	N 50°37'33" E	4.54'
L84	S 40°04'39" E	173.59'
L85	S 83°29'22" E	7.52'
L86	S 42°45'18" E	161.58'
L87	S 69°42'49" W	2.27'
L88	S 40°04'39" E	29.68'
L89	S 43°40'26" W	310.29'
L90	N 18°02'41" W	31.78'
L91	N 02°54'01" E	19.94'
L92	N 03°19'27" E	1.48'
L93	S 81°11'39" E	16.43'
L94	S 63°55'31" E	0.62'
L95	S 47°06'02" E	25.00'
L96	N 82°06'44" W	10.58'
L97	N 51°03'43" W	32.02'
L98	N 01°52'30" W	5.42'
L99	N 69°12'07" W	15.12'
L100	N 71°56'17" W	21.12'
L101	S 80°51'55" W	35.73'
L102	S 89°59'48" W	49.45'
L103	N 38°03'32" E	34.19'
L104	N 11°44'29" W	14.25'
L105	N 56°54'22" W	22.58'
L106	N 15°51'00" W	2.97'
L107	N 13°07'30" W	6.54'
L108	N 13°02'34" E	14.99'
L109	S 51°18'43" E	65.59'
L110	S 34°35'25" E	36.08'
L111	S 37°01'20" E	6.41'
L112	S 59°50'50" E	33.76'
L113	S 37°14'56" E	44.39'
L114	S 09°39'09" E	13.50'
L115	S 58°27'40" E	23.28'
L116	S 38°12'57" E	44.41'
L117	S 04°13'23" E	2.31'
L118	S 56°54'55" E	13.46'
L119	S 30°39'13" E	61.82'
L120	S 36°05'30" E	32.95'
L121	S 73°46'26" E	359.20'
L122	S 05°37'30" E	5.09'
L123	S 01°52'30" E	6.54'
L124	S 57°21'47" W	23.31'
L125	S 06°24'53" W	30.26'
L126	S 22°07'23" W	245.93'
L127	S 40°49'06" W	48.91'
L128	S 12°30'27" E	4.46'
L129	S 09°15'29" E	1.05'
L130	S 35°11'03" E	12.40'
L131	S 27°37'56" E	12.40'
L132	S 24°04'00" E	14.47'
L133	N 86°37'01" E	36.65'
L134	N 16°52'30" E	3.75'
L135	N 20°37'30" E	6.54'
L136	N 22°59'56" E	1.74'
L137	N 23°29'53" E	29.76'
L138	S 72°26'56" E	10.83'
L139	S 00°07'38" W	24.43'
L140	S 01°56'20" W	6.32'
L141	S 05°33'59" W	6.34'
L142	S 07°22'57" W	38.06'
L143	S 04°21'37" W	17.41'
L144	S 12°52'59" W	60.89'
L145	S 57°46'17" W	21.66'
L146	S 49°00'56" W	49.27'
L147	S 68°31'01" W	91.79'
L148	N 80°35'53" W	12.39'
L149	S 58°51'03" W	2.42'
L150	S 72°12'25" W	1.00'
L151	S 01°40'06" W	175.06'
L152	S 11°28'29" W	59.71'
L153	S 04°46'16" E	30.77'
L154	S 04°15'38" E	1.78'
L155	S 01°52'30" E	6.54'
L156	S 12°54'32" W	80.34'
L157	S 03°34'34" W	99.65'
L158	S 02°40'00" W	53.38'
L159	S 00°08'33" W	83.61'
L160	S 15°39'52" E	7.34'
L161	N 11°13'49" E	4.98'
L162	N 11°14'25" E	0.03'
L163	N 13°07'30" E	6.54'
L164	N 16°52'30" E	6.54'
L165	N 19°54'20" E	4.03'
L166	N 21°03'40" E	14.72'
L167	N 11°13'44" E	39.28'
L168	N 06°18'29" E	63.65'
L169	N 32°05'14" E	5.35'
L170	S 21°46'27" E	59.78'
L171	N 67°34'19" E	6.92'
L172	N 69°24'39" E	6.42'

LINE	BEARING	DISTANCE
L173	N 71°24'38" E	0.56'
L174	N 18°23'14" E	1.27'
L175	N 20°23'14" E	5.71'
L176	N 22°01'29" E	28.91'
L177	N 64°33'00" E	17.17'
L178	S 39°43'09" E	17.83'
L179	S 22°18'55" E	45.72'
L180	S 29°59'43" E	37.90'
L181	S 04°23'31" W	27.95'
L182	S 20°17'09" W	90.50'
L183	S 88°22'11" W	35.56'
L184	S 89°11'06" W	2.85'
L185	N 88°07'30" W	6.54'
L186	N 84°22'30" W	5.32'
L187	S 34°54'44" E	36.41'
L188	S 70°29'51" W	55.37'
L189	N 41°38'01" W	125.43'
L190	N 22°17'49" W	13.96'
L191	N 35°21'45" W	26.40'
L192	N 34°26'21" W	29.47'
L193	N 46°54'33" W	29.48'
L194	N 54°27'45" W	35.84'
L195	N 64°03'28" W	28.57'
L196	N 67°14'56" W	23.34'
L197	N 78°41'25" W	28.33'
L198	N 85°29'09" W	26.47'
L199	N 88°40'04" W	29.87'
L200	S 82°16'42" W	41.35'
L201	N 41°52'41" W	27.05'
L202	N 34°25'06" W	45.46'
L203	N 30°57'49" W	80.99'
L204	N 21°34'17" W	96.33'
L205	N 16°09'26" W	77.36'
L206	N 08°39'51" W	57.80'
L207	N 07°28'17" E	10.25'
L208	N 05°02'06" W	44.53'
L209	N 07°54'12" E	247.76'
L210	N 09°54'51" E	283.43'
L211	N 13°09'15" E	62.61'
L212	N 00°06'46" W	82.50'
L213	N 10°09'30" E	73.38'
L214	N 08°53'45" E	10.78'
L215	N 25°54'23" W	513.40'
L216	N 26°08'35" E	337.28'
L217	N 69°02'44" W	283.96'
L218	N 28°04'02" E	27.57'
L219	S 54°22'30" E	6.54'
L220	S 50°37'30" E	3.72'
L221	N 73°46'26" W	152.33'
L222	S 78°39'15" E	20.28'
L223	S 39°22'30" E	2.65'
L224	N 73°46'26" W	81.33'

CURVE	ARC LENGTH	RADIUS	DELTA ANGLE	CHORD BEARING	CHORD LENGTH
C1	96.04'	99.76'	55°09'34"	S 86°24'16" E	92.38'
C2	169.01'	99.95'	96°52'57"	S 28°27'20" E	149.58'
C3	104.72'	100.00'	60°00'03"	S 39°17'40" E	100.00'
C4	113.55'	100.00'	65°03'41"	S 23°14'12" W	107.55'
C5	85.43'	100.00'	48°56'59"	S 09°57'47" E	82.86'
C6	25.04'	100.00'	14°20'52"	S 21°41'09" W	24.98'
C7	126.34'	100.00'	72°23'25"	S 65°03'17" W	118.11'
C8	192.38'	5639.63'	1°57'16"	S 01°59'21" E	192.37'
C9	60.03'	99.49'	34°34'08"	S 50°18'59" E	59.12'
C10	131.67'	1618.80'	4°39'37"	S 49°03'50" E	131.64'
C11	178.98'	8218.65'	1°14'52"	S 65°48'09" E	178.98'
C12	167.82'	2013.88'	4°46'28"	S 63°56'05" E	167.77'
C13	275.25'	4143.71'	3°48'22"	S 64°00'09" E	275.20'
C14	154.56'	100.00'	88°33'28"	S 20°04'15" E	139.63'
C15	58.20'	100.00'	33°20'51"	S 40°52'55" W	57.38'
C16	254.12'	2650.36'	5°29'37"	N 66°28'37" W	254.02'
C17	484.99'	11554.86'	2°24'17"	N 62°31'39" W	484.95'
C18	99.83'	651.62'	8°46'42"	N 56°56'07" W	99.74'
C19	39.58'	162.62'	13°56'45"	N 40°42'43" W	39.49'
C20	92.32'	99.95'	52°55'20"	S 33°32'16" W	89.08'
C21	48.63'	99.25'	28°04'37"	S 56°44'29" W	48.15'
C22	57.03'	100.00'	32°40'38"	S 22°53'14" W	56.26'
C23	92.24'	100.00'	52°51'02"	S 09°56'58" E	89.01'
C24	63.65'	100.00'	36°28'06"	S 34°42'36" W	62.58'
C25	57.91'	100.00'	33°10'56"	S 69°32'07" W	57.11'
C26	115.87'	100.00'	66°23'25"	S 78°58'18" W	109.50'
C27	82.25'	100.00'	47°07'27"	S 27°01'31" W	79.95'
C28	39.14'	100.00'	22°25'30"	S 61°48'00" W	38.89'
C29	19.73'	100.00'	11°18'17"	S 78°39'53" W	19.70'
C30	58.60'	99.63'	33°41'50"	S 43°55'02" W	57.76'
C31	66.69'	100.00'	38°12'42"	S 79°50'57" W	65.46'
C32	38.74'	100.00'	22°11'41"	S 73°09'51" W	38.50'
C33	97.17'	100.00'	55°40'38"	N 67°54'00" W	93.40'
C34	80.27'	100.00'	45°59'26"	N 32°25'17" W	78.13'
C35	88.27'	100.00'	50°34'31"	S 66°57'31" W	85.43'
C36	51.82'	99.79'	29°45'08"	S 68°07'03" E	51.24'
C37	23.48'	100.00'	13°27'06"	N 80°00'50" E	23.42'
C38	70.96'	100.59'	40°25'10"	N 34°40'20" E	69.50'
C39	101.74'	100.00'	58°17'27"	N 54°52'01" E	97.41'
C40	41.95'	99.94'	24°02'52"	S 83°57'59" E	41.64'
C41	40.26'	122.18'	18°52'54"	N 14°58'46" E	40.08'
C42	92.83'	99.61'	53°23'51"	N 02°08'56" E	89.51'
C43	90.90'	99.65'	52°15'53"	N 54°52'55" E	87.78'
C44	136.43'	1122.03'	6°57'59"	N 24°30'47" E	136.34'
C45	39.69'	221.09'	10°17'08"	N 70°59'52" W	39.64'
C46	41.08'	100.00'	23°32'22"	N 51°58'49" W	40.80'
C47	17.82'	100.00'	10°12'42"	N 54°53'38" W	17.80'
C48	21.45'	100.00'	12°17'18"	N 43°38'38" W	21.41'
C49	17.21'	238.08'	4°08'34"	N 34°18'10" W	17.21'
C50	224.99'	100.00'	128°54'26"	N 11°58'59" W	180.45'
C51	53.55'	100.00'	30°41'03"	N 33°24'28" E	52.92'
C52	7.11'	10.00'	40°43'15"	S 63°07'48" E	6.96'
C53	20.97'	10.01'	120°03'09"	S 10°00'30" W	17.34'
C54	192.86'	99.98'	110°31'08"	N 21°38'04" W	164.32'
C55	16.70'	100.00'	9°34'16"	N 22°49'50" W	16.68'
C56	36.56'	100.00'	20°56'42"	N 07°34'20" W	36.35'
C57	165.90'	100.00'	95°03'21"	N 51°16'40" E	147.52'
C58	75.86'	100.00'	43°27'52"	S 59°27'42" E	74.05'
C59	43.87'	100.00'	25°08'07"	S 51°10'57" E	43.52'
C60	47.62'	100.09'	27°15'38"	S 55°52'08" E	47.17'
C61	39.47'	422.86'	5°20'55"	S 41°41'34" E	39.46'
C62	282.98'	7000.55'	2°18'58"	S 44°10'07" W	282.96'
C63	94.17'	6975.55'	0°46'25"	S 42°30'46" W	94.17'
C64	54.19'	100.00'	31°03'01"	N 66°35'14" W	53.53'
C65	82.57'	100.00'	47°18'43"	N 27°24'21" W	80.25'
C66	15.94'	100.00'	9°07'53"	S 85°25'51" W	15.92'
C67	31.87'	100.00'	18°15'40"	N 80°52'22" W	31.74'
C68	169.60'	100.00'	97°10'18"	N 63°35'09" W	149.99'
C69	40.89'	100.00'	23°25'48"	N 03°17'06" W	40.61'
C70	112.75'	100.00'	64°36'14"	N 26°25'20" E	106.88'
C71	82.20'	887.03'	5°18'34"	N 60°03'57" E	82.17'
C72	177.80'	100.00'	101°52'26"	N 12°52'41" W	155.29'
C73	49.30'	384.20'	7°21'06"	N 31°40'07" W	49.26'
C74	25.32'	100.00'	14°30'31"	N 18°59'45" W	25.25'
C75	121.41'	100.00'	69°33'41"	N 22°07'31" W	114.09'
C76	18.69'	100.00'	10°42'21"	N 05°53'50" W	18.66'
C77	97.58'	100.00'	55°54'39"	N 14°54'46" W	93.76'
C78	81.96'	100.00'	46°57'26"	N 36°31'17" E	79.68'
C79	119.89'	99.97'	68°42'48"	S 85°39'21" E	112.83'
C80	29.18'	100.00'	16°43'17"	S 42°57'04" E	29.08'
C81	95.19'	100.00'	54°32'25"	S 32°34'38" E	91.64'
C82	23.80'	100.00'	13°38'11"	S 44°04'02" E	23.74'
C83	48.16'	100.00'	27°35'47"	S 23°27'03" E	47.70'
C84	35.33'	100.00'	20°14'43"	S 48°20'19" E	35.15'
C85	59.33'	100.00'	33°59'34"	S 21°13'10" E	58.46'
C86	21.62'	100.00'	12°23'25"	S 50°43'13" E	21.58'
C87	101.29'	375.65'	15°26'58"	S 41°22'24" E	100.98'
C88	49.17'	100.00'	28°10'17"	S 44°44'22" E	48.67'
C89	15.49'	185.47'	4°47'04"	S 52°07'42" E	15.48'
C90	86.81'	679.18'	7°19'25"	S 70°06'44" E	86.75'
C91	100.12'	100.00'	57°21'47"	S 28°40'54" W	95.99'
C92	29.71'	105.84'	16°04'51"	S 14°00'40" W	29.61'
C93	32.63'	100.00'	18°41'39"	S 31°28'13" W	32.48'
C94	59.70'	100.33'	34°05'41"	N 69°32'17" E	58.82'
C95	98.20'	100.00'	56°15'57"	S 65°15'01" E	94.30'
C96	75.76'	100.00'	43°24'33"	S 79°21'49" E	73.96'
C97	42.26'	99.42'	24°21'18"	N 52°11'17" E	41.94'
C98	146.70'	100.00'	84°03'12"	N 65°31'28" E	133.90'
C99	126.45'	100.00'	72°26'56"	S 36°13'28" E	118.19'
C100	19.84'	100.00'	11°22'03"	S 13°03'59" W	19.81'
C101	14.91'	100.00'	8°32'31"	S 08°36'44" W	14.89'
C102	78.35'	100.00'	44°53'19"	S 35°19'38" W	76.36'
C103	34.04'	100.00'	19°30'06"	S 58°45'58" W	33.87'
C104	53.90'	100.00'	30°53'06"	S 83°57'34" W	53.25'
C105	23.31'	100.00'	13°21'22"	S 65°31'44" W	23.26'
C106	17.12'	100.00'	9°48'23"	S 06°34'17" W	17.09'
C107	97.46'	99.88'	55°54'09"	S 32°42'28" E	93.64'
C108	156.71'	99.98'	89°48'16"	S 44°53'56" W	141.16'
C109	44.99'	100.00'	25°46'45"	N 19°11'52" E	44.61'
C110	220.15'	100.00'	126°08'19"	S 84°50'36" E	178.31'
C111	74.22'	100.00'	42°31'31"	N 43°17'14" E	72.53'
C112	132.18'	100.00'	75°43'52"	S 77°35'04" E	122.76'
C113	110.29'	100.00'	63°11'22"	S 53°54'36" E	104.78'
C114	50.24'	100.00'	28°47'05"	S 15°36'10" E	49.71'
C115	113.92'	100.00'	65°16'11"	S 11°33'59" E	107.86'
C116	27.74'	100.00'	15°53'37"	S 12°20'20" W	27.65'
C117	49.19'	99.77'	28°15'01"	S 34°23'42" W	48.69'
C118	204.77'	99.96'	117°22'07"	S 29°41'40" W	170.80'
C119	26.24'	95.99'	15°39'35"	N 35°41'58" E	26.15'
C120	42.05'	99.09'	24°19'00"	S 79°34'16" E	41.74'
C121	62.20'	100.00'	35°38'19"	S 81°01'25" E	61.20'
C122	41.37'	305.53'	7°45'29"	S 62°11'04" E	41.34'
C123	45.02'	99.52'	25°55'05"	N 88°24'54" E	44.63'
C124	65.28'	100.00'	37°24'15"	N 59°57'08" E	64.13'
C125	45.86'	729.18'	3°36'14"	N 71°58'19" W	45.86'

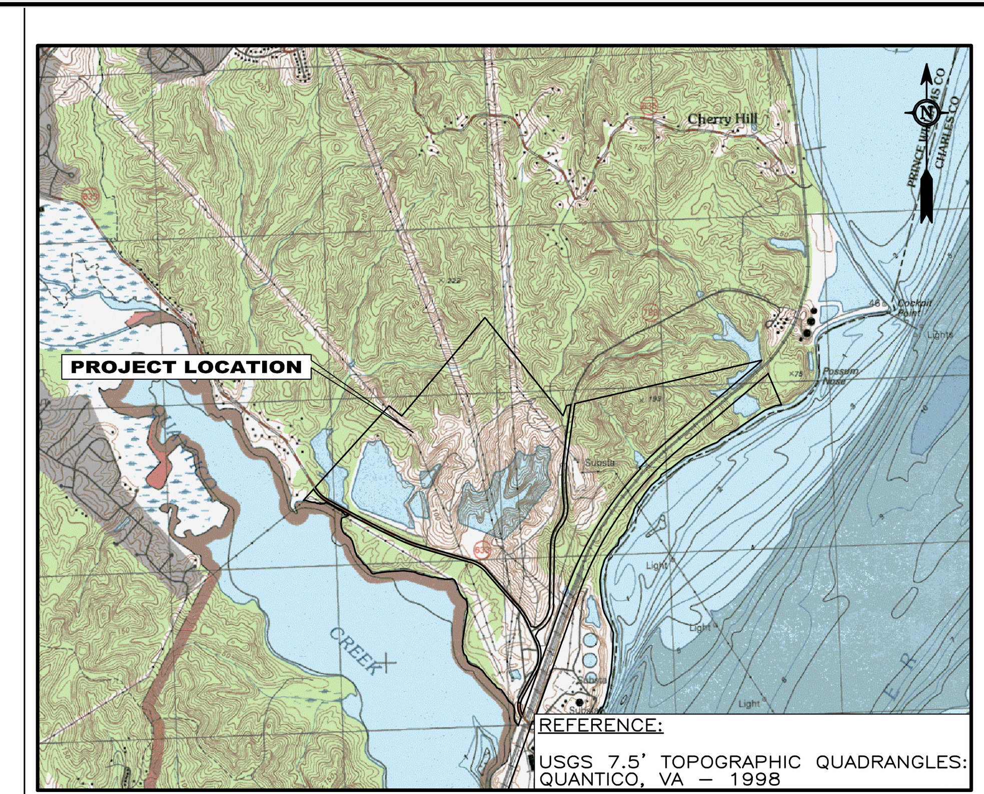

PROJECT LOCATION MAP
SCALE: 1"=3000'

NO.:	DATE:	DWN:	CHK:	APV:	DESCRIPTION:

REVISION RECORD

This drawing was produced with computer aided drafting technology and is supported by electronic drawing files. Do not revise this drawing via manual drafting methods.

GAI CAD FILE PATH: Z:\Energy\2015\C150132.00 - DOM - Possum Point PS CCB\CAD\Production Drawings\C150132-00-000-C-D1-062.dwg PLOTTED ON: 11/18/2015 10:20:18 AM PLOTTED BY: Michael Doyle PLOT FILE: GAI.stb

DRAWING TITLE
RESOURCE PROTECTION AREAS METES AND BOUNDS (1 OF 2)

PROJECT
POSSUM POINT POWER STATION
COAL COMBUSTION RESIDUAL
SURFACE IMPOUNDMENT
CLOSURES
DUMFRIES, VA

CLIENT
VIRGINIA ELECTRIC AND
POWER COMPANY
GLEN ALLEN, VA

gai consultants

ISSUING OFFICE: Richmond | 4198 Cox Road, Suite 114, Glen Allen, VA 23060

COMMONWEALTH OF VIRGINIA
DONALD F. CHANDLER II
Lic. No. 2754
12-7-2015
LAND SURVEYOR

DRAWN BY:	CHECKED BY:	APPROVED BY:
DOBBICR	KLAMUJR	KLAMUJR
DWG TYPE:	SCALE:	ISSUE DATE:
	AS SHOWN	12/7/2015

SHEET NO.: 62 OF 65
REVISION

GAI FILE NUMBER:
C150132-00-000-C-D1-062

ALT./CLIENT DRAWING NUMBER:

GAI DRAWING NUMBER:
062

PERMIT